ASME BOILER AND PRESSURE VESSEL CODE
AN INTERNATIONAL CODE

MATERIALS

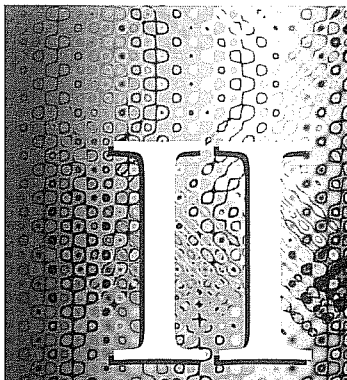

Part B

Nonferrous Material Specifications

2004 Edition
July 1, 2004

ASME BOILER AN
PRESSURE VESSE
COMMITTEE
SUBCOMMITTEE
ON MATERIALS

THE AMERICAN SOCIETY OF MECHANICAL ENGINEERS
NEW YORK, NEW YORK

Date of Issuance: July 1, 2004
(Includes all Addenda dated July 2003 and earlier)

This international code or standard was developed under procedures accredited as meeting the criteria for American National Standards and it is an American National Standard. The Standards Committee that approved the code or standard was balanced to assure that individuals from competent and concerned interests have had an opportunity to participate. The proposed code or standard was made available for public review and comment that provides an opportunity for additional public input from industry, academia, regulatory agencies, and the public-at-large.

ASME does not "approve," "rate," or "endorse" any item, construction, proprietary device, or activity.

ASME does not take any position with respect to the validity of any patent rights asserted in connection with any items mentioned in this document, and does not undertake to insure anyone utilizing a standard against liability for infringement of any applicable letters patent, nor assume any such liability. Users of a code or standard are expressly advised that determination of the validity of any such patent rights, and the risk of infringement of such rights, is entirely their own responsibility.

Participation by federal agency representative(s) or person(s) affiliated with industry is not to be interpreted as government or industry endorsement of this code or standard.

ASME accepts responsibility for only those interpretations of this document issued in accordance with the established ASME procedures and policies, which precludes the issuance of interpretations by individuals.

The footnotes in this document are part of this American National Standard.

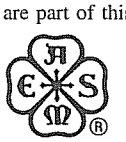

ASME collective membership mark

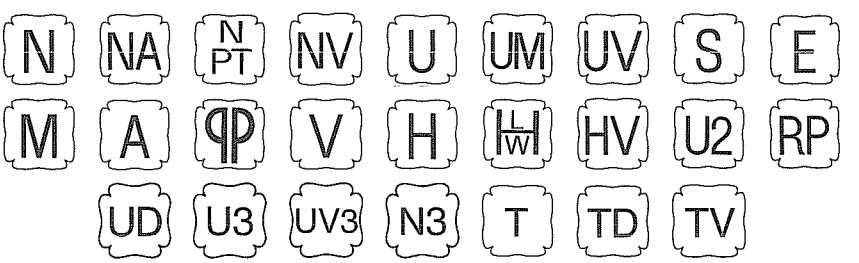

The above ASME symbols are registered in the U.S. Patent Office.

"ASME" is the trademark of the American Society of Mechanical Engineers.

The Specifications published and copyrighted by the American Society for Testing and Materials are reproduced with the Society's permission.

No part of this document may be reproduced in any form, in an electronic retrieval system or otherwise, without the prior written permission of the publisher.

Library of Congress Catalog Card Number: 56-3934
Printed in the United States of America

Adopted by the Council of the American Society of Mechanical Engineers, 1914.
Revised 1940, 1941, 1943, 1946, 1949, 1952, 1953, 1956, 1959, 1962, 1965, 1968, 1971, 1974, 1977, 1980, 1983, 1986, 1989, 1992, 1995, 1998, 2001, 2004

The American Society of Mechanical Engineers
Three Park Avenue, New York, NY 10016-5990

Copyright © 2004 by
THE AMERICAN SOCIETY OF MECHANICAL ENGINEERS
All Rights Reserved

2004 ASME
BOILER AND PRESSURE VESSEL CODE

04

SECTIONS

I Rules for Construction of Power Boilers

II Materials
- Part A — Ferrous Material Specifications
- Part B — Nonferrous Material Specifications
- Part C — Specifications for Welding Rods, Electrodes, and Filler Metals
- Part D — Properties (Customary)
- Part D — Properties (Metric)

III Subsection NCA — General Requirements for Division 1 and Division 2

III Division 1
- Subsection NB — Class 1 Components
- Subsection NC — Class 2 Components
- Subsection ND — Class 3 Components
- Subsection NE — Class MC Components
- Subsection NF — Supports
- Subsection NG — Core Support Structures
- Subsection NH — Class 1 Components in Elevated Temperature Service
- Appendices

III Division 2 — Code for Concrete Containments

III Division 3 — Containments for Transport and Storage of Spent Nuclear Fuel and High Level Radioactive Material and Waste

IV Rules for Construction of Heating Boilers

V Nondestructive Examination

VI Recommended Rules for the Care and Operation of Heating Boilers

VII Recommended Guidelines for the Care of Power Boilers

VIII Rules for Construction of Pressure Vessels
- Division 1
- Division 2 — Alternative Rules
- Division 3 — Alternative Rules for Construction of High Pressure Vessels

IX Welding and Brazing Qualifications

X Fiber-Reinforced Plastic Pressure Vessels

XI Rules for Inservice Inspection of Nuclear Power Plant Components

XII Rules for Construction and Continued Service of Transport Tanks

ADDENDA

Colored-sheet Addenda, which include additions and revisions to individual Sections of the Code, are published annually and will be sent automatically to purchasers of the applicable Sections up to the publication of the 2007 Code. The 2004 Code is available only in the loose-leaf format; accordingly, the Addenda will be issued in the loose-leaf, replacement-page format.

INTERPRETATIONS

ASME issues written replies to inquiries concerning interpretation of technical aspects of the Code. The Interpretations for each individual Section will be published separately and will be included as part of the update service to that Section. They will be issued semiannually (July and December) up to the publication of the 2004 Code. Interpretations of Section III, Divisions 1 and 2, will be included with the update service to Subsection NCA.

Beginning with the 2004 Edition, Interpretations of the Code will be distributed annually in July with the issuance of the edition and subsequent addenda. Interpretations previously distributed in January will be posted in January at www.cstools.asme.org/interpretations and included in the July distribution.

CODE CASES

The Boiler and Pressure Vessel Committee meets regularly to consider proposed additions and revisions to the Code and to formulate Cases to clarify the intent of existing requirements or provide, when the need is urgent, rules for materials or constructions not covered by existing Code rules. Those Cases which have been adopted will appear in the appropriate 2004 Code Cases book: (1) Boilers and Pressure Vessels and (2) Nuclear Components. Supplements will be sent automatically to the purchasers of the Code Cases books up to the publication of the 2007 Code.

CONTENTS

Foreword xi
Statements of Policy xv
Personnel xvii
ASTM Personnel xxvii
Preface xxix
Specifications Listed by Materials xxxi
Specification Removal xxxvii
Preparation of Technical Inquiries to the Boiler and Pressure Vessel Committee xxxix
Guideline on the Approval of New Materials Under the ASME Boiler and Pressure Vessel Code xli
Acceptable ASTM Editions xlv
Guidelines on Multiple Marking of Materials liii
Summary of Changes lv

Specifications

SB-26/SB-26M	Aluminum-Alloy Sand Castings	1
SB-42	Seamless Copper Pipe, Standard Sizes	19
SB-43	Seamless Red Brass Pipe, Standard Sizes	27
SB-61	Steam or Valve Bronze Castings	35
SB-62	Composition Bronze or Ounce Metal Castings	37
SB-75	Seamless Copper Tube	39
SB-96	Copper-Silicon Alloy Plate, Sheet, Strip, and Rolled Bar for General Purposes and Pressure Vessels	49
SB-98/SB-98M	Copper-Silicon Alloy Rod, Bar, and Shapes	53
SB-108	Aluminum-Alloy Permanent Mold Castings	59
SB-111	Copper and Copper-Alloy Seamless Condenser Tubes and Ferrule Stock	75
SB-127	Nickel-Copper Alloy (UNS N04400) Plate, Sheet, and Strip	85
SB-135	Seamless Brass Tube	97
SB-148	Aluminum-Bronze Sand Castings	101
SB-150	Aluminum Bronze Rod, Bar, and Shapes	107
SB-151	Copper-Nickel-Zinc Alloy (Nickel Silver) and Copper-Nickel Rod and Bar	113
SB-152	Copper Sheet, Strip, Plate, and Rolled Bar	119
SB-160	Nickel Rod and Bar	125
SB-161	Nickel Seamless Pipe and Tube	133
SB-162	Nickel Plate, Sheet, and Strip	139
SB-163	Seamless Nickel and Nickel Alloy Condenser and Heat-Exchanger Tubes	153
SB-164	Nickel-Copper Alloy Rod, Bar, and Wire	165
SB-165	Nickel-Copper Alloy (UNS N04400) Seamless Pipe and Tube	177
SB-166	Nickel-Chromium-Iron Alloys (UNS N06600, N06601, N06603, N06690, N06693, N06025, and N06045) and Nickel-Chromium-Cobalt-Molybdenum Alloy (UNS N06617) Rod, Bar, and Wire	183

SB-167	Nickel-Chromium-Iron Alloys (UNS N06600, N06601, N06603, N06690, N06693, N06025, and N06045) and Nickel-Chromium-Cobalt-Molybdenum Alloy (UNS N06617) Seamless Pipe and Tube	193
SB-168	Nickel-Chromium-Iron Alloys (UNS N06600, N06601, N06603, N06690, N06693, N06025, and N06045) and Nickel-Chromium-Cobalt-Molybdenum Alloy (UNS N06617) Plate, Sheet, and Strip	201
SB-169	Aluminum Bronze Plate, Sheet, Strip, and Rolled Bar	215
SB-171	Copper-Alloy Plate and Sheet for Pressure Vessels, Condensers, and Heat Exchangers	219
SB-187	Copper Bar, Bus Bar, Rod, and Shapes	225
SB-209	Aluminum and Aluminum-Alloy Sheet and Plate	233
SB-210	Aluminum and Aluminum-Alloy Drawn Seamless Tubes	247
SB-211	Aluminum and Aluminum-Alloy Bar, Rod, and Wire	259
SB-221	Aluminum and Aluminum-Alloy Extruded Bars, Rods, and Profiles	271
SB-234	Aluminum and Aluminum-Alloy Drawn Seamless Tubes for Condensers and Heat Exchangers	279
SB-241/SB-241M	Aluminum and Aluminum-Alloy Seamless Pipe and Seamless Extruded Tube	289
SB-247	Aluminum-Alloy Die and Hand Forgings	311
SB-248	General Requirements for Wrought Copper and Copper-Alloy Plate, Sheet, Strip, and Rolled Bar	321
SB-249	General Requirements for Wrought Copper and Copper-Alloy Rod, Bar, Shapes, and Forgings	337
SB-251	General Requirements for Wrought Seamless Copper and Copper-Alloy Tube	353
SB-265	Titanium and Titanium Alloy Strip, Sheet, and Plate	363
SB-271	Copper-Base Alloy Centrifugal Castings	377
SB-283	Copper and Copper-Alloy Die Forgings (Hot-Pressed)	381
SB-308/SB-308M	Aluminum-Alloy 6061-T6 Standard Structural Profiles	391
SB-315	Seamless Copper Alloy Pipe and Tube	397
SB-333	Nickel-Molybdenum Alloy Plate, Sheet, and Strip	409
SB-335	Nickel-Molybdenum Alloy Rod	417
SB-338	Seamless and Welded Titanium and Titanium Alloy Tubes for Condensers and Heat Exchangers	423
SB-348	Titanium and Titanium Alloy Bars and Billets	435
SB-359	Copper and Copper-Alloy Seamless Condenser and Heat Exchanger Tubes With Integral Fins	445
SB-363	Seamless and Welded Unalloyed Titanium and Titanium Alloy Welding Fittings	455
SB-366	Factory-Made Wrought Nickel and Nickel Alloy Fittings	459
SB-367	Titanium and Titanium Alloy Castings	467
SB-369	Copper-Nickel Alloy Castings	473
SB-381	Titanium and Titanium Alloy Forgings	477
SB-395	U-Bend Seamless Copper and Copper-Alloy Heat Exchanger and Condenser Tubes	487
SB-407	Nickel-Iron-Chromium Alloy Seamless Pipe and Tube	497
SB-408	Nickel-Iron-Chromium Alloy Rod and Bar	507
SB-409	Nickel-Iron-Chromium Alloy Plate, Sheet, and Strip	515
SB-423	Nickel-Iron-Chromium-Molybdenum-Copper Alloy (UNS N08825 and N08221) Seamless Pipe and Tube	529
SB-424	Ni-Fe-Cr-Mo-Cu Alloy (UNS N08825 and UNS N08221) Plate, Sheet, and Strip	533
SB-425	Ni-Fe-Cr-Mo-Cu Alloy (UNS N08825 and UNS N08221) Rod and Bar	545

SB-434	Nickel-Molybdenum-Chromium-Iron Alloys (UNS N10003, UNS N10242) Plate, Sheet, and Strip	553
SB-435	UNS N06002, UNS N06230, UNS N12160, and UNS R30556 Plate, Sheet, and Strip	559
SB-443	Nickel-Chromium-Molybdenum-Columbium Alloy (UNS N06625) and Nickel-Chromium-Molybdenum-Silicon Alloy (UNS N06219) Plate, Sheet, and Strip	567
SB-444	Nickel-Chromium-Molybdenum-Columbium Alloys (UNS N06625) and Nickel-Chromium-Molybdenum-Silicon Alloy (UNS N06219) Pipe and Tube	577
SB-446	Nickel-Chromium-Molybdenum-Columbium Alloy (UNS N06625) Rod and Bar	583
SB-462	Forged or Rolled UNS N06030, UNS N06022, UNS N06200, UNS N08020, UNS N08024, UNS N08026, UNS N08367, UNS N10276, UNS N10665, UNS N10675, and UNS R20033 Alloy Pipe Flanges, Forged Fittings, and Valves and Parts for Corrosive High-Temperature Service	591
SB-463	UNS N08020, UNS N08026, and UNS N08024 Alloy Plate, Sheet, and Strip	599
SB-464	Welded UNS N08020, UNS N08024, and UNS N08026 Alloy Pipe	611
SB-466	Seamless Copper-Nickel Pipe and Tube	615
SB-467	Welded Copper-Nickel Pipe	623
SB-468	Welded UNS N08020, N08024, and N08026 Alloy Tubes	631
SB-473	UNS N08020, UNS N08026, and UNS N08024 Nickel Alloy Bar and Wire	635
SB-493	Zirconium and Zirconium Alloy Forgings	645
SA-494/SA-494M	Castings, Nickel and Nickel Alloy	649
SB-505	Copper-Base Alloy Continuous Castings	659
SB-511	Nickel-Iron-Chromium-Silicon Alloy Bars and Shapes	665
SB-514	Welded Nickel-Iron-Chromium Alloy Pipe	673
SB-515	Welded UNS N08120, UNS N08800, UNS N08810, and UNS N08811 Alloy Tubes	677
SB-516	Welded Nickel-Chromium-Iron Alloy (UNS N06600), UNS N06025, and UNS N06045 Tubes	681
SB-517	Welded Nickel-Chromium-Iron Alloy (UNS N06600, UNS N06603, UNS N06025, and UNS N06045) Pipe	683
SB-523/SB-523M	Seamless and Welded Zirconium and Zirconium Alloy Tubes	685
SB-535	Nickel-Iron-Chromium-Silicon Alloys (UNS N08330 and N08332) Seamless Pipe and Tube	691
SB-536	Nickel-Iron-Chromium-Silicon Alloys (UNS N08330 and N08332) Plate, Sheet, and Strip	695
SB-543	Welded Copper and Copper-Alloy Heat Exchanger Tube	705
SB-548	Ultrasonic Inspection of Aluminum-Alloy Plate for Pressure Vessels	717
SB-550/SB-550M	Zirconium and Zirconium Alloy Bar and Wire	723
SB-551/SB-551M	Zirconium and Zirconium Alloy Strip, Sheet, and Plate	731
SB-564	Nickel Alloy Forgings	743
SB-572	UNS N06002, UNS N06230, UNS N12160, and UNS R30556 Rod	751
SB-573	Nickel-Molybdenum-Chromium-Iron Alloys (UNS N10003, N10242) Rod	757
SB-574	Low-Carbon Nickel-Molybdenum-Chromium, Low-Carbon Nickel-Chromium-Molybdenum, Low-Carbon Nickel-Molybdenum-Chromium-Tantalum, Low-Carbon Nickel-Chromium-Molybdenum-Copper, and Low-Carbon Nickel-Chromium-Molybdenum-Tungsten Alloy Rod	763

SB-575	Low-Carbon Nickel-Molybdenum-Chromium, Low-Carbon Nickel-Chromium-Molybdenum, Low-Carbon Nickel-Chromium-Molybdenum-Copper, Low-Carbon Nickel-Chromium-Molybdenum-Tantalum, and Low-Carbon Nickel-Chromium-Molybdenum-Tungsten Alloy Plate, Sheet, and Strip	769
SB-581	Nickel-Chromium-Iron-Molybdenum-Copper Alloy Rod	777
SB-582	Nickel-Chromium-Iron-Molybdenum-Copper Alloy Plate, Sheet, and Strip	783
SB-584	Copper Alloy Sand Castings for General Applications	791
SB-599	Nickel-Iron-Chromium-Molybdenum-Columbium Stabilized Alloy (UNS N08700) Plate, Sheet, and Strip	799
SB-619	Welded Nickel and Nickel-Cobalt Alloy Pipe	813
SB-620	Nickel-Iron-Chromium-Molybdenum Alloy (UNS N08320) Plate, Sheet, and Strip	821
SB-621	Nickel-Iron-Chromium-Molybdenum Alloy (UNS N08320) Rod	827
SB-622	Seamless Nickel and Nickel-Cobalt Alloy Pipe and Tube	833
SB-625	UNS N08904, UNS N08925, UNS N08031, UNS N08932, UNS N08926, and UNS R20033 Plate, Sheet, and Strip	841
SB-626	Welded Nickel and Nickel-Cobalt Alloy Tube	853
SB-637	Precipitation-Hardening Nickel Alloy Bars, Forgings, and Forging Stock for High-Temperature Service	859
SB-649	Ni-Fe-Cr-Mo-Cu Low-Carbon Alloy (UNS N08904), Ni-Fe-Cr-Mo-Cu-N Low-Carbon Alloys (UNS N08925, UNS N08031, and UNS N08926), and Cr-Ni-Fe-N Low-Carbon Alloy (UNS R20033) Bar and Wire	867
SB-658/SB-658M	Seamless and Welded Zirconium and Zirconium Alloy Pipe	877
SB-668	UNS N08028 Seamless Tubes	883
SB-672	Nickel-Iron-Chromium-Molybdenum-Columbium Stabilized Alloy (UNS N08700) Bar and Wire	885
SB-673	UNS N08904, UNS N08925, and UNS N08926 Welded Pipe	893
SB-674	UNS N08904, UNS N08925, and UNS N08926 Welded Tube	899
SB-675	UNS N08366 and UNS N08367 Welded Pipe	905
SB-676	UNS N08366 and UNS N08367 Welded Tube	911
SB-677	UNS N08904, UNS N08925, and UNS N08926 Seamless Pipe and Tube	917
SB-688	Chromium-Nickel-Molybdenum-Iron (UNS N08366 and UNS N08367) Plate, Sheet, and Strip	923
SB-690	Iron-Nickel-Chromium-Molybdenum Alloys (UNS N08366 and UNS N08367) Seamless Pipe and Tube	931
SB-691	Iron-Nickel-Chromium-Molybdenum Alloys (UNS N08366 and UNS N08367) Rod, Bar, and Wire	937
SB-704	Welded UNS N06625, UNS N06219, and UNS N08825 Alloy Tubes	945
SB-705	Nickel-Alloy (UNS N06625, UNS N06219, and UNS N08825) Welded Pipe	947
SB-709	Iron-Nickel-Chromium-Molybdenum Alloy (UNS N08028) Plate, Sheet, and Strip	949
SB-710	Nickel-Iron-Chromium-Silicon Alloy Welded Pipe	961
SB-729	Seamless UNS N08020, UNS N08026, and UNS N08024 Nickel-Alloy Pipe and Tube	963
SB-751	General Requirements for Nickel and Nickel-Alloy Seamless and Welded Tube	967
SB-775	General Requirements for Nickel and Nickel-Alloy Welded Pipe	975
SB-804	UNS N08367 and UNS N08926 Welded Pipe	981
SB-815	Cobalt-Chromium-Nickel-Molybdenum-Tungsten Alloy (UNS R31233) Rod	989

SB-818	Cobalt-Chromium-Nickel-Molybdenum-Tungsten Alloy (UNS R31233) Plate, Sheet, and Strip	995
SB-824	General Requirements for Copper Alloy Castings	1001
SB-829	General Requirements for Nickel and Nickel Alloys Seamless Pipe and Tube	1007
SB-858M	Test Method for Determination of Susceptibility to Stress Corrosion Cracking in Copper Alloys Using an Ammonia Vapor Test	1015
SB-861	Titanium and Titanium Alloy Seamless Pipe	1021
SB-862	Titanium and Titanium Alloy Welded Pipe	1031
SB-906	General Requirements for Flat-Rolled Nickel and Nickel Alloy Plate, Sheet, and Strip	1043

Mandatory Appendix

Appendix I	Standard Units for Use in Equations	1066

FOREWORD

The American Society of Mechanical Engineers set up a committee in 1911 for the purpose of formulating standard rules for the construction of steam boilers and other pressure vessels. This committee is now called the Boiler and Pressure Vessel Committee.

The Committee's function is to establish rules of safety, relating only to pressure integrity, governing the construction[1] of boilers, pressure vessels, transport tanks and nuclear components, and inservice inspection for pressure integrity of nuclear components and transport tanks, and to interpret these rules when questions arise regarding their intent. This code does not address other safety issues relating to the construction of boilers, pressure vessels, transport tanks and nuclear components, and the inservice inspection of nuclear components and transport tanks. The user of the Code should refer to other pertinent codes, standards, laws, regulations, or other relevant documents. With few exceptions, the rules do not, of practical necessity, reflect the likelihood and consequences of deterioration in service related to specific service fluids or external operating environments. Recognizing this, the Committee has approved a wide variety of construction rules in this Section to allow the user or his designee to select those which will provide a pressure vessel having a margin for deterioration in service so as to give a reasonably long, safe period of usefulness. Accordingly, it is not intended that this Section be used as a design handbook; rather, engineering judgment must be employed in the selection of those sets of Code rules suitable to any specific service or need.

This Code contains mandatory requirements, specific prohibitions, and nonmandatory guidance for construction activities. The Code does not address all aspects of these activities and those aspects which are not specifically addressed should not be considered prohibited. The Code is not a handbook and cannot replace education, experience, and the use of engineering judgment. The phrase *engineering judgment* refers to technical judgments made by knowledgeable designers experienced in the application of the Code. Engineering judgments must be consistent with Code philosophy and such judgments must never be used to overrule mandatory requirements or specific prohibitions of the Code.

The Committee recognizes that tools and techniques used for design and analysis change as technology progresses and expects engineers to use good judgment in the application of these tools. The designer is responsible for complying with Code rules and demonstrating compliance with Code equations when such equations are mandatory. The Code neither requires nor prohibits the use of computers for the design or analysis of components constructed to the requirements of the Code. However, designers and engineers using computer programs for design or analysis are cautioned that they are responsible for all technical assumptions inherent in the programs they use and they are responsible for the application of these programs to their design.

The Code does not fully address tolerances. When dimensions, sizes, or other parameters are not specified with tolerances, the values of these parameters are considered nominal and allowable tolerances or local variances may be considered acceptable when based on engineering judgment and standard practices as determined by the designer.

The Boiler and Pressure Vessel Committee deals with the care and inspection of boilers and pressure vessels in service only to the extent of providing suggested rules of good practice as an aid to owners and their inspectors.

The rules established by the Committee are not to be interpreted as approving, recommending, or endorsing any proprietary or specific design or as limiting in any way the manufacturer's freedom to choose any method of design or any form of construction that conforms to the Code rules.

The Boiler and Pressure Vessel Committee meets regularly to consider revisions of the rules, new rules as dictated by technological development, Code Cases, and requests for interpretations. Only the Boiler and Pressure Vessel Committee has the authority to provide

[1] *Construction*, as used in this Foreword, is an all-inclusive term comprising materials, design, fabrication, examination, inspection, testing, certification, and pressure relief.

official interpretations of this Code. Requests for revisions, new rules, Code Cases, or interpretations shall be addressed to the Secretary in writing and shall give full particulars in order to receive consideration and action (see Mandatory Appendix covering preparation of technical inquiries). Proposed revisions to the Code resulting from inquiries will be presented to the Main Committee for appropriate action. The action of the Main Committee becomes effective only after confirmation by letter ballot of the Committee and approval by ASME.

Proposed revisions to the Code approved by the Committee are submitted to the American National Standards Institute and published at *http://cstools.asme.org/wbpms/public/index.cfm?PublicReview=Revisions* to invite comments from all interested persons. After the allotted time for public review and final approval by ASME, revisions are published annually in Addenda to the Code.

Code Cases may be used in the construction of components to be stamped with the ASME Code symbol beginning with the date of their approval by ASME.

After Code revisions are approved by ASME, they may be used beginning with the date of issuance shown on the Addenda. Revisions, except for revisions to material specifications in Section II, Parts A and B, become mandatory six months after such date of issuance, except for boilers or pressure vessels contracted for prior to the end of the six-month period. Revisions to material specifications are originated by the American Society for Testing and Materials (ASTM) and other recognized national or international organizations, and are usually adopted by ASME. However, those revisions may or may not have any effect on the suitability of material, produced to earlier editions of specifications, for use in ASME construction. ASME material specifications approved for use in each construction Code are listed in the Guidelines for Acceptable ASTM Editions in Section II, Parts A and B. These Guidelines list, for each specification, the latest edition adopted by ASME, and earlier and later editions considered by ASME to be identical for ASME construction.

The Boiler and Pressure Vessel Committee in the formulation of its rules and in the establishment of maximum design and operating pressures considers materials, construction, methods of fabrication, inspection, and safety devices.

The Code Committee does not rule on whether a component shall or shall not be constructed to the provisions of the Code. The Scope of each Section has been established to identify the components and parameters considered by the Committee in formulating the Code rules.

Questions or issues regarding compliance of a specific component with the Code rules are to be directed to the ASME Certificate Holder (Manufacturer). Inquiries concerning the interpretation of the Code are to be directed to the ASME Boiler and Pressure Vessel Committee. ASME is to be notified should questions arise concerning improper use of an ASME Code symbol.

The specifications for materials given in Section II are identical with or similar to those of specifications published by ASTM, AWS, and other recognized national or international organizations. When reference is made in an ASME material specification to a non-ASME specification for which a companion ASME specification exists, the reference shall be interpreted as applying to the ASME material specification. Not all materials included in the material specifications in Section II have been adopted for Code use. Usage is limited to those materials and grades adopted by at least one of the other Sections of the Code for application under rules of that Section. All materials allowed by these various Sections and used for construction within the scope of their rules shall be furnished in accordance with material specifications contained in Section II or referenced in the Guidelines for Acceptable ASTM Editions in Section II, Parts A and B, except where otherwise provided in Code Cases or in the applicable Section of the Code. Materials covered by these specifications are acceptable for use in items covered by the Code Sections only to the degree indicated in the applicable Section. Materials for Code use should preferably be ordered, produced, and documented on this basis; Guideline for Acceptable ASTM Editions in Section II, Part A and Guideline for Acceptable ASTM Editions in Section II, Part B list editions of ASME and year dates of specifications that meet ASME requirements and which may be used in Code construction. Material produced to an acceptable specification with requirements different from the requirements of the corresponding specifications listed in the Guideline for Acceptable ASTM Editions in Part A or Part B may also be used in accordance with the above, provided the material manufacturer or vessel manufacturer certifies with evidence acceptable to the Authorized Inspector that the corresponding requirements of specifications listed in the Guideline for Acceptable ASTM Editions in Part A or Part B have been met. Material produced to an acceptable material specification is not limited as to country of origin.

When required by context in this Section, the singular shall be interpreted as the plural, and vice-versa; and the feminine, masculine, or neuter gender shall be treated as such other gender as appropriate.

Either U.S. Customary units or SI units may be used for compliance with all requirements of this edition, but one system shall be used consistently throughout for all phases of construction.

Either the U.S. Customary units or SI units that are listed in Mandatory Appendix I are identified in the text, or are identified in the nomenclature for equations, shall be used consistently for all phases of construction (e.g., materials, design, fabrication, and reports). Since values in the two systems are not exact equivalents, each system shall be used independently of the other without mixing U.S. Customary units and SI units.

When SI units are selected, U.S. Customary values in referenced specifications that do not contain SI units shall be converted to SI values to at least three significant figures for use in calculations and other aspects of construction.

With the publication of the 2004 Edition, Section II, Part D is published as two separate publications. One publication contains values only in U.S. Customary units and the other contains values only in SI units. The selection of the version to use is dependent on the set of units selected for construction.

STATEMENT OF POLICY ON THE USE OF CODE SYMBOLS AND CODE AUTHORIZATION IN ADVERTISING

ASME has established procedures to authorize qualified organizations to perform various activities in accordance with the requirements of the ASME Boiler and Pressure Vessel Code. It is the aim of the Society to provide recognition of organizations so authorized. An organization holding authorization to perform various activities in accordance with the requirements of the Code may state this capability in its advertising literature.

Organizations that are authorized to use Code Symbols for marking items or constructions that have been constructed and inspected in compliance with the ASME Boiler and Pressure Vessel Code are issued Certificates of Authorization. It is the aim of the Society to maintain the standing of the Code Symbols for the benefit of the users, the enforcement jurisdictions, and the holders of the symbols who comply with all requirements.

Based on these objectives, the following policy has been established on the usage in advertising of facsimiles of the symbols, Certificates of Authorization, and reference to Code construction. The American Society of Mechanical Engineers does not "approve," "certify," "rate," or "endorse" any item, construction, or activity and there shall be no statements or implications that might so indicate. An organization holding a Code Symbol and/or a Certificate of Authorization may state in advertising literature that items, constructions, or activities "are built (produced or performed) or activities conducted in accordance with the requirements of the ASME Boiler and Pressure Vessel Code," or "meet the requirements of the ASME Boiler and Pressure Vessel Code."

The ASME Symbol shall be used only for stamping and nameplates as specifically provided in the Code. However, facsimiles may be used for the purpose of fostering the use of such construction. Such usage may be by an association or a society, or by a holder of a Code Symbol who may also use the facsimile in advertising to show that clearly specified items will carry the symbol. General usage is permitted only when all of a manufacturer's items are constructed under the rules.

The ASME logo, which is the cloverleaf with the letters ASME within, shall not be used by any organization other than ASME.

STATEMENT OF POLICY ON THE USE OF ASME MARKING TO IDENTIFY MANUFACTURED ITEMS

The ASME Boiler and Pressure Vessel Code provides rules for the construction of boilers, pressure vessels, and nuclear components. This includes requirements for materials, design, fabrication, examination, inspection, and stamping. Items constructed in accordance with all of the applicable rules of the Code are identified with the official Code Symbol Stamp described in the governing Section of the Code.

Markings such as "ASME," "ASME Standard," or any other marking including "ASME" or the various Code Symbols shall not be used on any item that is not constructed in accordance with all of the applicable requirements of the Code.

Items shall not be described on ASME Data Report Forms nor on similar forms referring to ASME that tend to imply that all Code requirements have been met when, in fact, they have not been. Data Report Forms covering items not fully complying with ASME requirements should not refer to ASME or they should clearly identify all exceptions to the ASME requirements.

PERSONNEL

ASME Boiler and Pressure Vessel Committee

Subcommittees, Subgroups, and Working Groups

As of January 1, 2004

MAIN COMMITTEE

G. G. Karcher, *Chair*
J. G. Feldstein, *Vice Chair*
J. S. Brzuszkiewicz, *Secretary*
R. W. Barnes
J. E. Batey
D. L. Berger
M. N. Bressler
D. A. Canonico
F. C. Cherny
D. A. Douin
R. E. Gimple
M. Gold
T. E. Hansen
C. L. Hoffmann
D. F. Landers
W. M. Lundy
J. R. MacKay
U. R. Miller
R. A. Moen
P. A. Molvie
C. C. Neely
T. P. Pastor
C. J. Pieper
M. D. Rana
B. W. Roberts
F. J. Schaaf, Jr.
A. Selz
R. W. Swayne
D. E. Tanner
S. V. Voorhees

EXECUTIVE COMMITTEE (MAIN COMMITTEE)

J. G. Feldstein, *Chair*
G. G. Karcher, *Vice Chair*
J. S. Brzuszkiewicz, *Secretary*
R. W. Barnes
D. A. Canonico
R. E. Gimple
M. Gold
J. R. MacKay
T. P. Pastor
A. Selz
A. J. Spencer
D. E. Tanner

HONORARY MEMBERS (MAIN COMMITTEE)

R. D. Bonner
R. J. Bosnak
R. J. Cepluch
L. J. Chockie
W. D. Doty
J. R. Farr
R. C. Griffin
E. J. Hemzy
M. H. Jawad
J. LeCoff
F. N. Moschini
W. E. Somers
L. P. Zick, Jr.

HONORS AND AWARDS COMMITTEE

J. R. MacKay, *Chair*
J. N. Shih, *Secretary*
J. E. Batey
D. L. Berger
J. G. Feldstein
M. Gold
F. E. Gregor
W. L. Haag, Jr.
M. H. Jawad
D. P. Jones
T. P. Pastor
C. J. Pieper
R. R. Stevenson

MARINE CONFERENCE GROUP

J. Tiratto, *Chair*
L. W. Douthwaite
J. L. Jones

CONFERENCE COMMITTEE

D. A. Douin — Illinois *(Chair)*
R. D. Reetz — North Dakota *(Vice Chair)*
D. E. Tanner — Ohio *(Secretary)*
R. J. Aben, Jr. — Michigan
J. S. Aclaro — California
J. T. Amato — Minnesota
E. A. Anderson — Chicago, Illinois
F. R. Andrus — Oregon
R. D. Austin — Colorado
M. M. Barber — Michigan
R. Barlett — Arizona
F. P. Barton — Virginia
W. K. Brigham — New Hampshire
D. E. Burns — Nebraska
J. H. Burpee — Maine
C. Castle — Nova Scotia, Canada
R. R. Cate — Louisiana
D. C. Cook — California
R. A. Coomes — Kentucky
D. Eastman — Newfoundland and Labrador, Canada
G. L. Ebeyer — New Orleans, Louisiana
E. Everett — Georgia
J. M. Given, Jr. — North Carolina
P. C. Hackford — Utah
J. B. Harlan — Delaware
M. L. Holloway — Oklahoma
K. Hynes — Prince Edward Island, Canada
D. T. Jagger — Ohio
D. J. Jenkins — Kansas
S. Katz — British Columbia, Canada
M. Kotb — Quebec, Canada
K. T. Lau — Alberta, Canada
S. E. Lyons — Arkansas
M. A. Malek — Florida
G. F. Mankel — Alaska
R. D. Marvin II — Washington
I. W. Mault — Manitoba, Canada
H. T. McEwen — Mississippi
R. Mile — Ontario, Canada
M. F. Mooney — Massachusetts
Y. Nagpaul — Hawaii
T. Parks — Texas
J. D. Payton — Pennsylvania
M. R. Peterson — Alaska
H. D. Pfaff — South Dakota
D. C. Price — Yukon Territory, Canada
R. S. Pucek — Wisconsin
D. E. Ross — New Brunswick, Canada
M. Shuff — West Virginia
N. Surtees — Saskatchewan, Canada
M. R. Toth — Tennessee
M. J. Verhagen — Wisconsin
M. Washington — New Jersey
R. B. West — Iowa
M. J. Wheel — Vermont
D. J. Willis — Indiana

INTERNATIONAL INTEREST REVIEW GROUP

V. Felix
S. H. Leong
P. Williamson

SUBCOMMITTEE ON POWER BOILERS (SC I)

J. R. MacKay, *Chair*
D. L. Berger, *Vice Chair*
J. N. Shih, *Secretary*
D. A. Canonico
K. K. Coleman
P. D. Edwards
J. Hainsworth
T. E. Hansen
J. S. Hunter
C. F. Jeerings
J. P. Libbrecht
H. Lorenz
W. L. Lowry
T. C. McGough
R. E. McLaughlin
P. A. Molvie
J. T. Pillow
R. G. Presnak
B. W. Roberts
R. D. Schueler, Jr.
J. P. Swezy
J. M. Tanzosh
R. V. Wielgoszinski
D. J. Willis

Honorary Members (SC I)

D. N. French
W. E. Somers
R. L. Williams

Subgroup on Design (SC I)

P. A. Molvie, *Chair*
M. L. Coats
J. D. Fishburn
C. F. Jeerings
J. C. Light
R. D. Schueler, Jr.
J. L. Seigle
N. Surtees
J. P. Swezy
S. V. Torkildson
R. V. Wielgoszinski

Subgroup on Fabrication and Examination (SC I)

D. L. Berger, *Chair*
J. T. Pillow, *Secretary*
J. Hainsworth
T. E. Hansen
T. C. McGough
R. E. McLaughlin
Y. Oishi
R. D. Schueler, Jr.
J. P. Swezy
R. V. Wielgoszinski

Subgroup on General Requirements (SC I)

R. E. McLaughlin, *Chair*
J. Hainsworth, *Secretary*
D. L. Berger
P. D. Edwards
C. F. Jeerings
J. C. Light
W. L. Lowry
T. C. McGough
J. T. Pillow
R. P. Sullivan
R. V. Wielgoszinski
D. J. Willis

Subgroup on Materials (SC I)

B. W. Roberts, *Chair*
J. S. Hunter, *Secretary*
D. A. Canonico
K. K. Coleman
K. L. Hayes
J. F. Henry
J. P. Libbrecht
F. Masuyama
J. M. Tanzosh
H. N. Titer, Jr.

Subgroup on Piping (SC I)

T. E. Hansen, *Chair*
D. L. Berger
P. D. Edwards
W. L. Lowry
F. Massi
T. C. McGough
M. W. Smith
E. A. Whittle

Heat Recovery Steam Generators Task Group (SC I & SC VIII)

T. E. Hansen, *Chair*
R. W. Anderson
G. L. Bostick
I. J. Cotton
L. R. Douglas
J. D. Fishburn
E. M. Ortman
A. L. Plumley
D. W. Rahoi
R. D. Scheuler, Jr.
R. H. Sirois
J. C. Steverman, Jr.
J. K. Tercey
S. R. Timko
S. V. Torkildson

SUBCOMMITTEE ON MATERIALS (SC II)

M. Gold, *Chair*
R. A. Moen, *Vice Chair*
N. Lobo, *Secretary*
D. C. Agarwal
W. R. Apblett, Jr.
M. N. Bressler
H. D. Bushfield
J. Cameron
D. A. Canonico
D. W. Gandy
M. H. Gilkey
J. F. Grubb
J. F. Henry
C. L. Hoffmann
F. Masuyama
R. K. Nanstad
M. L. Nayyar
E. G. Nisbett
D. W. Rahoi
B. W. Roberts
E. Shapiro
R. C. Sutherlin
R. W. Swindeman
J. M. Tanzosh
B. E. Thurgood
J. C. Vaillant

Honorary Members (SC II)

A. P. Ahrendt
T. M. Cullen
R. Dirscherl
W. D. Doty
W. D. Edsall
J. J. Heger
G. C. Hsu
C. E. Spaeder, Jr.
A. W. Zeuthen

Subgroup on External Pressure (SC II & SC-D)

R. W. Mikitka, *Chair*
J. A. Morrow, *Secretary*
S. R. Frost
D. S. Griffin
J. F. Grubb
M. Katcher
E. Michalopoulos
D. Nadel
D. F. Shaw
C. H. Sturgeon

Subgroup on Ferrous Specifications (SC II)

E. G. Nisbett, *Chair*
A. Appleton
R. M. Davison
B. M. Dingman
M. J. Dosdourian
T. Graham
J. F. Grubb
K. M. Hottle
D. Janikowski
D. C. Krouse
L. J. Lavezzi
W. C. Mack
J. K. Mahaney
A. S. Melilli
K. E. Orie
E. Upitis
R. Zawierucha
A. W. Zeuthen

Subgroup on International Material Specifications (SC II)

W. M. Lundy, *Chair*
J. P. Glaspie, *Secretary*
D. C. Agarwal
H. D. Bushfield
D. A. Canonico
W. D. Doty
D. M. Fryer
A. F. Garbolevsky
J. P. Glaspie
M. Gold
D. O. Henry
M. Higuchi
H. Lorenz
F. Osweiller
R. D. Schueler, Jr.
E. A. Steen
E. Upitis

Subgroup on Nonferrous Alloys (SC II)

D. W. Rahoi, *Chair*
M. Katcher, *Secretary*
W. R. Apblett, Jr.
H. D. Bushfield
L. G. Coffee
M. H. Gilkey
E. L. Hibner
G. C. Hsu
A. G. Kireta, Jr.
J. Kissell
O. Miyahara
D. T. Peters
E. Shapiro
R. C. Sutherlin
R. Zawierucha

Subgroup on Strength, Ferrous Alloys (SC II)

C. L. Hoffmann, *Chair*
J. M. Tanzosh, *Secretary*
W. R. Apblett, Jr.
D. A. Canonico
K. K. Coleman
M. Gold
F. Masuyama
O. Miyahara
R. A. Moen
H. Murakami
D. W. Rahoi
B. W. Roberts
M. S. Shelton
R. W. Swindeman
B. E. Thurgood
T. P. Vassallo

Subgroup on Strength of Weldments (SC II & SC IX)

J. M. Tanzosh, *Chair*
K. K. Coleman
W. D. Doty
K. L. Hayes
J. F. Henry
D. W. Rahoi
B. W. Roberts
W. J. Sperko
B. E. Thurgood

Subgroup on Toughness (SC II & SC VIII)

W. S. Jacobs, *Chair*
J. L. Arnold
R. J. Basile
J. Cameron
W. D. Doty
H. E. Gordon
C. D. Lamb
K. Mokhtarian
C. C. Neely
T. T. Phillips
M. D. Rana
D. A. Swanson
E. Upitis
S. Yukawa

Special Working Group on Nonmetallic Materials (SC II)

C. W. Rowley, *Chair*
F. L. Brown
P. S. Hill
F. R. Volgstadt
R. H. Walker
F. Worth

SUBCOMMITTEE ON NUCLEAR POWER (SC III)

R. W. Barnes, *Chair*
R. M. Jessee, *Vice Chair*
C. A. Sanna, *Secretary*
Y. Asada
W. H. Borter
E. B. Branch
M. N. Bressler
F. C. Cherny
R. E. Cornman, Jr.
W. D. Doty
R. P. Deubler
B. A. Erler
G. M. Foster
D. H. Hanrath
R. S. Hill III
C. L. Hoffmann
C. C. Kim
D. F. Landers
W. C. LaRochelle
K. A. Manoly
E. A. Mayhew
W. N. McLean
R. A. Moen
C. J. Pieper
R. F. Reedy
B. B. Scott
J. D. Stevenson
C. H. Walters
K. R. Wichman

Honorary Member (SC III)

F. R. Drahos

Subgroup on Containment Systems for Spent Fuel and High-Level Waste Transport Packagings (SC III)

G. M. Foster, *Chair*
G. J. Solovey, *Vice Chair*
D. K. Morton, *Secretary*
W. H. Borter
J. T. Conner
E. L. Farrow
J. M. Floyd
R. S. Hill III
H. W. Lee
P. E. McConnell
I. D. McInnes
A. B. Meichler
G. C. Mok
R. E. Nickell
T. J. O'Connell
E. L. Pleins
T. Saegusa
H. P. Shrivastava
N. M. Simpson
R. H. Smith
J. D. Stevenson
C. J. Temus
P. Turula
A. D. Watkins
S. Yukawa

Subgroup on Design (SC III)

R. P. Deubler, *Chair*
C. W. Bruny, *Vice Chair*
A. N. Nguyen, *Secretary*
T. M. Adams
E. B. Branch
M. N. Bressler
D. L. Caldwell
J. R. Cole
R. E. Cornman, Jr.
A. A. Dermenjian
D. H. Hanrath
R. S. Hill III
R. I. Jetter
H. Kobayashi
J. T. Land
D. F. Landers
K. A. Manoly
R. J. Masterson
W. N. McLean
J. C. Minichiello
T. Nakamura
W. Z. Novak
I. Saito
G. C. Slagis
J. D. Stevenson
K. R. Wichman

Working Group on Supports (SG-D) (SC III)

R. J. Masterson, *Chair*
F. J. Birch, *Secretary*
U. S. Bandyopadhyay
R. P. Deubler
J. C. Finneran, Jr.
A. N. Nguyen
P. R. Olson
I. Saito
J. R. Stinson
D. V. Walshe
C.-I. Wu

Working Group on Core Support Structures (SG-D) (SC III)

J. T. Land

Working Group on Dynamic and Extreme Load Conditions (SG-D) (SC III)

D. L. Caldwell, *Chair*
P. L. Anderson, *Secretary*
M. K. Au-Yang
R. D. Blevins
P.-Y. Chen
W. S. LaPay
H. Lockert
P. R. Olson

Working Group on Piping (SG-D) (SC III)

J. R. Cole, *Chair*
P. Hirschberg, *Secretary*
T. M. Adams
G. A. Antaki
J. Catalano
C. Y. Chern
J. T. Conner
R. J. Gurdal
R. W. Haupt
R. S. Hill III
D. F. Landers
V. Matzen
J. F. McCabe
J. C. Minichiello
F. F. Naguib
A. N. Nguyen
O. O. Oyamada
R. D. Patel
E. C. Rodabaugh
M. S. Sills
G. C. Slagis
V. K. Verma
E. A. Wais
C.-I. Wu

Working Group on Probabilistic Methods in Design (SG-D) (SC III)

R. S. Hill III, *Chair*
J. T. Conner, *Secretary*
T. Asayama
B. M. Ayyub
K. R. Balkey
A. A. Dermenjian
I. Saito
M. E. Schmidt
J. P. Tucker

Working Group on Pumps (SG-D) (SC III)

R. E. Cornman, Jr., *Chair*
A. A. Fraser
M. Higuchi
G. R. Jones
J. W. Leavitt
J. E. Livingston
J. R. Rajan
D. B. Spencer, Jr.
G. K. Vaghasia

Working Group on Valves (SG-D) (SC III)

W. N. McLean, *Chair*
R. R. Brodin
R. Koester
J. D. Page
S. N. Shields
H. R. Sonderegger
J. C. Tsacoyeanes
J. P. Tucker
R. G. Visalli

Working Group on Vessels (SG-D) (SC III)

C. W. Bruny, *Chair*
F. F. Naguib, *Secretary*
D. H. Hanrath
M. Hartzman
W. J. Heilker
A. Kalnins
R. B. Keating
D. E. Matthews
G. K. Miller
W. Z. Novak
E. Pelling
H. S. Thornton

Special Working Group on Environmental Effects (SG-D) (SC III)

W. Z. Novak, *Chair*
Y. Asada
R. S. Hill III
C. L. Hoffmann
R. A. Moen
S. Yukawa

Subgroup on General Requirements (SC III & SC 3C)

W. C. LaRochelle, *Chair*
C. A. Lizotte, *Secretary*
A. Appleton
B. H. Berg
E. A. Mayhew
R. P. McIntyre
R. Mile
M. R. Minick
B. B. Scott
H. K. Sharma
D. M. Vickery
D. V. Walshe
C. H. Walters

Subgroup on Materials, Fabrication, and Examination (SC III)

C. L. Hoffmann, *Chair*
G. P. Milley, *Secretary*
B. H. Berg
W. H. Borter
D. M. Doyle
G. M. Foster
G. B. Georgiev
R. M. Jessee
C. C. Kim
M. Lau
R. A. Moen
H. Murakami
C. J. Pieper
N. M. Simpson
W. J. Sperko
K. B. Stuckey
S. Yukawa

Subgroup on Pressure Relief (SC III)

S. F. Harrison, Jr., *Chair*
F. C. Cherny
E. M. Petrosky
A. L. Szeglin
D. G. Thibault

Special Working Group on Editing and Review (SC III)

R. F. Reedy, *Chair*
W. H. Borter
M. N. Bressler
D. L. Caldwell
R. P. Deubler
B. A. Erler
D. H. Hanrath
W. C. LaRochelle
J. D. Stevenson

JOINT ACI-ASME COMMITTEE ON CONCRETE COMPONENTS FOR NUCLEAR SERVICE (SC 3C)

M. F. Hessheimer, *Chair*
T. C. Inman, *Vice Chair*
A. J. Roby, *Secretary*
J. F. Artuso
A. C. Eberhardt
B. A. Erler
J. Gutierrez
D. C. Jeng
T. E. Johnson
N.-H. Lee
B. B. Scott
R. E. Shewmaker
J. D. Stevenson
A. Y. C. Wong

SUBCOMMITTEE ON HEATING BOILERS (SC IV)

P. A. Molvie, *Chair*
S. V. Voorhees, *Vice Chair*
G. Moino, *Secretary*
R. Bartlett
T. L. Bedeaux
D. C. Bixby
J. Calland
B. G. French
W. L. Haag, Jr.
J. D. Hoh
D. J. Jenkins
K. M. McTague
K. R. Moskwa
E. A. Nordstrom
J. L. Seigle
R. V. Wielgoszinski
F. P. Barton, *Honorary Member*
R. B. Duggan, *Honorary Member*
R. H. Weigel, *Honorary Member*
J. I. Woodward, *Honorary Member*

Subgroup on Care and Operation of Heating Boilers (SC IV)

S. V. Voorhees, *Chair*
T. L. Bedeaux
K. J. Hoey
J. D. Hoh
K. M. McTague
P. A. Molvie

Subgroup on Cast Iron Boilers (SC IV)

K. M. McTague, *Chair*
T. L. Bedeaux
C. P. McQuiggan
K. R. Moskwa
R. H. Weigel
J. I. Woodworth

Subgroup on Water Heaters (SC IV)

W. L. Haag, Jr., *Chair*
J. Calland
T. D. Gantt
F. M. Lucas
K. M. McTague
E. Robinson
F. J. Schreiner
M. A. Taylor
T. E. Trant

Subgroup on Welded Boilers (SC IV)

J. L. Seigle, *Chair*
R. Bartlett
T. L. Bedeaux
J. Calland
B. G. French
E. A. Nordstrom
R. P. Sullivan
R. V. Wielgoszinski

SUBCOMMITTEE ON NONDESTRUCTIVE EXAMINATION (SC V)

J. E. Batey, *Chair*
F. B. Kovacs, *Vice Chair*
E. H. Maradiaga, *Secretary*
S. J. Akrin
A. S. Birks
N. Y. Faransso
G. W. Hembree
R. W. Kruzic
J. F. Manning
W. C. McGaughey
R. D. McGuire
D. R. Quattlebaum, Jr.
F. J. Sattler
E. F. Summers, Jr.
M. J. Wheel

Subgroup on General Requirements/ Personnel Qualifications and Inquiries (SC V)

R. D. McGuire, *Chair*
J. E. Batey
A. S. Birks
N. Y. Faransso
G. W. Hembree
J. R. MacKay
J. P. Swezy

Subgroup on Surface Examination Methods (SC V)

S. J. Akrin, *Chair*
A. S. Birks
N. Y. Faransso
G. W. Hembree
R. W. Kruzic
D. R. Quattlebaum, Jr.
F. J. Sattler
E. F. Summers, Jr.
M. J. Wheel

Subgroup on Volumetric Methods (SC V)

G. W. Hembree, *Chair*
S. J. Akrin
J. E. Batey
N. Y. Faransso
R. Kellerhall
F. B. Kovacs
R. W. Kruzic
J. F. Manning
W. C. McGaughey
F. J. Sattler
E. F. Summers, Jr.
J. P. Swezy

Working Group on Acoustic Emissions (SG-VM) (SC V)

J. E. Batey
J. F. Manning

Working Group on Radiography (SG-VM) (SC V)

G. W. Hembree, *Chair*
S. J. Akrin
J. E. Batey
N. Y. Faransso
F. B. Kovacs
R. W. Kruzic
E. F. Summers, Jr.
J. P. Swezy

Working Group on Ultrasonics (SG-VM) (SC V)

N. Y. Faransso
O. F. Hedden
R. Kellerhall
R. W. Kruzic
J. F. Manning
W. C. McGaughey
F. J. Sattler

SUBCOMMITTEE ON PRESSURE VESSELS (SC VIII)

T. P. Pastor, *Chair*
K. Mokhtarian, *Vice Chair*
S. J. Rossi, *Secretary*
R. J. Basile
V. Bogosian
J. Cameron
R. M. Elliott
J. G. Feldstein
J. P. Glaspie
M. J. Houle
W. S. Jacobs
G. G. Karcher
K. T. Lau
R. Mahadeen
R. W. Mikitka
U. R. Miller
C. C. Neely
M. J. Pischke
M. D. Rana
S. C. Roberts
C. D. Rodery
K. J. Schneider
A. Selz
J. R. Sims, Jr.
E. A. Steen
K. K. Tam
E. L. Thomas, Jr.
E. Upitis

Subgroup on Design (SC VIII)

U. R. Miller, *Chair*
R. E. Knoblock, *Secretary*
O. A. Barsky
R. J. Basile
M. R. Bauman
M. R. Breach
S. M. Caldwell
J. R. Farr
J. P. Glaspie
W. S. Jacobs
R. W. Mikitka
K. Mokhtarian
T. P. Pastor
M. D. Rana
G. B. Rawls, Jr.
C. D. Rodery
A. Selz
S. C. Shah
C. H. Sturgeon
K. K. Tam
E. L. Thomas, Jr.

Subgroup on Fabrication and Inspection (SC VIII)

C. D. Rodery, *Chair*
E. A. Steen, *Vice Chair*
J. L. Arnold
W. J. Bees
H. E. Gordon
M. J. Houle
W. S. Jacobs
D. J. Kreft
D. C. Lamb
J. S. Lee
B. R. Morelock
M. J. Pischke
B. F. Shelley

Subgroup on General Requirements (SC VIII)

S. C. Roberts, *Chair*
D. B. Demichael, *Secretary*
V. Bogosian
R. M. Elliott
J. P. Glaspie
K. T. Lau
A. S. Mann
C. C. Neely
A. S. Olivares
K. J. Schneider
K. K. Tam

Subgroup on Materials (SC VIII)

J. Cameron, *Chair*
E. E. Morgenegg, *Secretary*
D. C. Agarwal
W. D. Doty
J. F. Grubb
E. L. Hibner
M. Katcher
H. Lorenz
W. M. Lundy
E. G. Nisbett
K. E. Orie
D. W. Rahoi
E. Upitis

Special Working Group on Graphite Pressure Equipment (SC VIII)

M. D. Johnson, *Chair*
U. D'Urso, *Secretary*
G. Braussen
F. L. Brown
S. W. Hairston
S. Malone
M. R. Minick
T. A. Pindroh
E. Soltow
A. A. Stupica

Special Working Group on Heat Transfer Equipment (SC VIII)

R. Mahadeen, *Chair*
G. Aurioles, *Secretary*
O. A Barsky
S. M. Caldwell
M. J. Holtz
U. R. Miller
T. W. Norton
F. Osweiller
R. J. Stastny
S. Yokell
R. P. Zoldak

Special Working Group on High-Pressure Vessels (SC VIII)

J. R. Sims, Jr., *Chair*
D. T. Peters, *Vice Chair*
P. A. Reddington, *Secretary*
L. P. Antalffy
R. C. Biel
D. J. Burns
P. N. Chaku
R. E. Feigel
J. L. Heck, Jr.
A. H. Honza
V. T. Hwang
M. M. James
P. Jansson
J. A. Kapp
J. Keltjens
D. P. Kendall
A. K. Khare
S. C. Mordre
G. J. Mraz
K. D. Murphy
S. N. Pagay
E. H. Perez
E. D. Roll
J. F. Sullivan
F. W. Tatar
S. Tereda

Task Group on Impulsively Loaded Vessels (SC VIII)

R. B. Nickell, *Chair*
S. J. Rossi, *Secretary*
G. A. Antaki
D. D. Barker
R. C. Biel
D. W. Bowman
D. L. Caldwell
J. E. Didlake, Jr.
T. A. Duffey
B. L. Haroldsen
H. L. Heaton
E. A. Rodriguez
J. R. Sims, Jr.

SUBCOMMITTEE ON WELDING (SC IX)

J. G. Feldstein, *Chair*
W. J. Sperko, *Vice Chair*
M. R. Aranzamendez, *Secretary*
D. A. Bowers
M. L. Carpenter
L. P. Connor
W. D. Doty
P. D. Flenner
M. J. Houle
J. S. Lee
W. M. Lundy
R. D. McGuire
B. R. Newmark
A. S. Olivares
M. J. Pischke
S. D. Reynolds, Jr.
M. J. Rice
G. W. Spohn III
M. J. Stanko
P. L. Van Fosson
R. R. Young
W. K. Scattergood, *Honorary Member*

Subgroup on Brazing (SC IX)

M. J. Pischke, *Chair*
F. Beckman
L. F. Campbell
M. L. Carpenter
M. J. Houle
C. F. Jeerings
J. P. Swezy

Subgroup on General Requirements (SC IX)

B. R. Newmark, *Chair*
P. R. Evans
R. M. Jessee
A. S. Olivares
H. B. Porter
R. A. Weiss
K. R. Willens

Subgroup on Materials (SC IX)

M. L. Carpenter, *Chair*
M. Bernasek
L. P. Connor
R. M. Jessee
C. C. Kim
S. D. Reynolds, Jr.
H. A. Sadler
C. E. Sainz
W. J. Sperko
M. J. Stanko
R. R. Young

Subgroup on Performance Qualification (SC IX)

D. A. Bowers, *Chair*
V. A. Bell
L. P. Connor
R. B. Corbit
P. R. Evans
P. D. Flenner
K. L. Hayes
M. J. Houle
J. S. Lee
W. M. Lundy
R. D. McGuire
M. B. Sims
G. W. Spohn III

Subgroup on Procedure Qualification (SC IX)

D. A. Bowers, *Chair*
M. J. Rice, *Secretary*
R. K. Brown, Jr.
A. S. Olivares
F. C. Ouyang
S. D. Reynolds, Jr.
M. B. Sims
W. J. Sperko
J. P. Swezy
P. L. Van Fosson
T. C. Wiesner

SUBCOMMITTEE ON FIBER-REINFORCED PLASTIC PRESSURE VESSELS (SC X)

D. Eisberg, *Chair*
P. J. Conlisk, *Vice Chair*
A. J. Roby, *Secretary*
F. L. Brown
J. L. Bustillos
T. W. Cowley
T. J. Fowler
L. E. Hunt
J. C. Murphy
D. J. Painter
D. J. Pinell
G. Ramirez
J. R. Richter
B. F. Shelley
F. W. Van Name
D. O. Yancey, Jr.
P. H. Ziehl

SUBCOMMITTEE ON NUCLEAR INSERVICE INSPECTION (SC XI)

R. E. Gimple, *Chair*
G. C. Park, *Vice Chair*
O. Martinez, *Secretary*
W. H. Bamford, Jr.
R. L. Beverly
T. J. Conner
D. D. Davis
R. L. Dyle
E. L. Farrow
F. E. Gregor
D. O. Henry
R. D. Kerr
D. F. Landers
J. T. Lindberg
K. Miya
W. E. Norris
A. T. Roberts III
W. R. Rogers III
L. Sage
D. A. Scarth
F. J. Schaaf, Jr.
J. C. Spanner, Jr.
J. E. Staffiera
R. W. Swayne
E. W. Throckmorton
C. S. Withers
R. A. Yonekawa
K. K. Yoon

Honorary Members (SC XI)

S. H. Bush
L. J. Chockie
C. D. Cowfer
O. F. Hedden
J. P. Houstrup
L. R. Katz
P. C. Riccardella

Subgroup on Evaluation Standards (SC XI)

W. H. Bamford, Jr., *Chair*
J. M. Bloom
R. C. Cipolla
S. Coffin
G. H. De Boo
R. M. Gamble
T. J. Griesbach
K. Hasegawa
P. J. Hijeck
D. N. Hopkins
Y. Imamura
K. Koyama
D. R. Lee
S. Ranganath
D. A. Scarth
W. L. Server
G. L. Stevens
C. A. Tomes
A. Van Der Sluys
K. R. Wichman
G. M. Wilkowski
K. K. Yoon
S. Yukawa

Working Group on Flaw Evaluation (SG-ES) (SC XI)

R. C. Cipolla, *Chair*
G. H. De Boo, *Secretary*
W. H. Bamford, Jr.
M. Basol
J. M. Bloom
E. Friedman
T. J. Griesbach
F. D. Hayes
D. N. Hopkins
Y. Imamura
K. Koyama
D. R. Lee
H. S. Mehta
M. A. Mitchell
J. E. O'Sullivan
R. K. Qashu
S. Ranganath
D. A. Scarth
T. S. Schurman
W. L. Server
F. A. Simonen
K. R. Wichman
G. M. Wilkowski
K. K. Yoon
S. Yukawa
V. A. Zilberstein

Working Group on Operating Plant Criteria (SG-ES) (SC XI)

T. J. Griesbach, *Chair*
W. H. Bamford, Jr.
H. Behnke
B. A. Bishop
E. Friedman
S. R. Gosselin
P. J. Hijeck
S. N. Malik
P. Manbeck
H. S. Mehta
R. Pace
J. S. Panesar
D. W. Peltola
J. R. Pfefferle
S. Ranganath
S. T. Rosinski
W. L. Server
E. A. Siegel
F. A. Simonen
G. L. Stevens
K. K. Yoon
S. Yukawa
C. Santos, Jr., *Alternate*

Working Group on Pipe Flaw Evaluation (SG-ES) (SC XI)

D. A. Scarth, *Chair*
G. M. Wilkowski, *Secretary*
W. H. Bamford, Jr.
R. C. Cipolla
N. G. Cofie
S. K. Daftuar
G. H. De Boo
E. Friedman
L. F. Goyette
K. Hasegawa
D. N. Hopkins
K. K. Kashima
H. S. Mehta
K. Miyazaki
J. S. Panesar
K. K. Yoon
S. Yukawa
V. A. Zilberstein

Subgroup on Liquid-Metal–Cooled Systems (SC XI)

C. G. McCargar, *Chair*
W. L. Chase
R. W. King

Working Group on Liquid-Metal Reactor Covers (SG-LMCS) (SC XI)

W. L. Chase, *Chair*

Subgroup on Nondestructive Examination (SC XI)

J. C. Spanner, Jr., *Chair*
C. J. Wirtz, *Secretary*
F. L. Becker
N. R. Bentley
B. Bevins
T. L. Chan
C. B. Cheezem
C. D. Cowfer
F. J. Dodd
D. O. Henry
M. R. Hum
G. L. Lagleder
J. T. Lindberg
G. A. Lofthus
J. J. McArdle III
M. C. Modes
A. S. Reed
F. J. Schaaf, Jr.
M. F. Sherwin

Working Group on Personnel Qualification and Surface, Visual, and Eddy Current Examination (SG-NDE) (SC XI)

J. J. McArdle III, *Chair*
M. F. Sherwin, *Secretary*
D. R. Cordes
B. L. Curtis
G. B. Georgiev
D. O. Henry
A. S. Reed
J. C. Spanner, Jr.
S. H. Von Fuchs
C. J. Wirtz

Working Group on Pressure Testing (SG-NDE) (SC XI)

D. W. Lamond, *Chair*
J. M. Boughman, *Secretary*
T. M. Anselmi
J. J. Churchwell
R. J. Cimoch
S. Coffin
G. L. Fechter
K. W. Hall
R. E. Hall
J. K. McClanahan
A. McNeill III
B. L. Montgomery

Working Group on Procedure Qualification and Volumetric Examination (SG-NDE) (SC XI)

N. R. Bentley, *Chair*
B. Bevins, *Secretary*
F. L. Becker
C. B. Cheezem
C. D. Cowfer
S. R. Doctor
F. J. Dodd
M. E. Gothard
D. A. Jackson
R. Kellerhall
D. B. King
D. Kurek
G. L. Lagleder
G. A. Lofthus
S. M. Walker
C. E. Moyer, *Alternate*

Subgroup on Repair/Replacement Activities (SC XI)

R. W. Swayne, *Chair*
J. T. Conner, *Secretary*
D. E. Boyle
M. N. Bressler
R. E. Cantrell
E. V. Farrell, Jr.
P. D. Fisher
E. B. Gerlach
R. E. Gimple
R. A. Hermann
T. E. Hiss
E. V. Imbro
R. D. Kerr
S. L. McCracken
M. S. McDonald
B. R. Newton
W. R. Rogers III
R. R. Stevenson
D. E. Waskey
C. S. Withers
R. A. Yonekawa

Working Group on Design and Programs (SG-RRA) (SC XI)

T. E. Hiss, *Chair*
E. V. Farrell, Jr., *Secretary*
D. E. Boyle
S. B. Brown
J. T. Conner
S. K. Fisher
E. B. Gerlach
D. R. Graham
E. V. Imbro
D. F. Landers
M. S. McDonald
W. R. Rogers III
R. R. Stevenson
R. W. Swayne
A. H. Taufique
T. P. Vassallo, Jr.
R. A. Yonekawa

Working Group on Welding and Special Repair Process (SG-RRA) (SC XI)

D. E. Waskey, *Chair*
R. E. Cantrell, *Secretary*
J. A. Davis
S. J. Findlan
P. D. Fisher
A. J. Giannuzzi
R. P. Indap
R. D. Kerr
C. C. Kim
M. Lau
S. L. McCracken
B. R. Newton
J. E. O'Sullivan
J. G. Weicks
K. R. Willens
E. V. Andruskiewicz, *Alternate*

Subgroup on Water-Cooled Systems (SC XI)

E. W. Throckmorton, *Chair*
G. E. Whitman, *Secretary*
J. M. Agold
G. L. Belew
J. M. Boughman
W. J. Briggs
R. E. Ciemiewicz
D. D. Davis
E. L. Farrow
O. F. Hedden
M. L. Herrera
S. D. Kulat
D. W. Lamond
M. P. Lintz
W. E. Norris
J. E. Staffiera
H. M. Stephens, Jr.
K. B. Thomas
S. M. Walker
R. A. West
H. L. Graves III, *Alternate*

Working Group on Containment (SG-WCS) (SC XI)

J. E. Staffiera, *Chair*
H. M. Stephens, Jr., *Secretary*
H. Ashar
W. J. Briggs
S. G. Brown
K. K. N. Chao
R. E. Ciemiewicz
R. C. Cox
M. J. Ferlisi
H. L. Graves III
H. T. Hill
R. D. Hough
C. N. Krishnaswamy
M. P. Lintz
D. Naus
S. C. Petitgout
W. E. Norris, *Alternate*

Working Group on ISI Optimization (SG-WCS) (SC XI)

E. A. Siegel, *Chair*
R. L. Turner, *Secretary*
W. H. Bamford, Jr.
N. R. Bentley
J. M. Boughman
R. E. Hall
D. G. Naujock
M. F. Sherwin
K. B. Thomas
G. E. Whitman

Working Group on Implementation of Risk-Based Examination (SG-WCS) (SC XI)

S. D. Kulat, *Chair*
J. M. Agold, *Secretary*
S. A. Ali
K. R. Balkey
B. A. Bishop
H. Q. Do
R. Fougerousse
M. R. Graybeal
M. L. Herrera
J. T. Lindberg
I. Mach
R. K. Mattu
A. McNeill III
J. T. Mitman
P. J. O'Regan
M. J. Paterak
J. H. Phillips
M. A. Pyne
F. A. Simonen
R. A. West
A. T. Keim, *Alternate*

Working Group on Inspection of Systems and Components (SG-WCS) (SC XI)

K. B. Thomas, *Chair*
G. E. Whitman, *Secretary*
V. L. Armentrout
G. L. Belew
H. Q. Do
R. Fougerousse
M. R. Hum
S. D. Kulat
J. T. Lindberg
I. Mach
D. G. Naujock
C. Pendleton
C. M. Ross
D. Song
E. W. Throckmorton
R. L. Turner
R. A. West

Working Group on General Requirements (SC XI)

A. T. Roberts III, *Chair*
K. Rhyne, *Secretary*
T. L. Chan
J. W. Crider
E. L. Farrow
D. W. Kinley III
R. K. Mattu
L. Sage
S. R. Scott
C. S. Withers

Special Working Group on Editing and Review (SC XI)

R. W. Swayne, *Chair*
R. L. Beverly
M. P. Lintz
L. Sage
J. E. Staffiera
C. J. Wirtz

Special Working Group on Plant Life Extension (SC XI)

F. E. Gregor, *Chair*
M. P. Lintz, *Secretary*
T. M. Anselmi
D. D. Davis
P.-T. Kuo
T. A. Meyer

SUBCOMMITTEE ON TRANSPORT TANKS (SC XII)

A. Selz, *Chair*
P. D. Stumpf, *Secretary*
A. N. Antoniou
C. Becht IV
M. L. Coats
M. A. Garrett
C. H. Hochman
G. G. Karcher
G. McRae
M. R. Minick
M. D. Rana
C. M. Serratella
S. Staniszewski
G. R. Stoeckinger
M. R. Toth
A. P. Varghese
S. V. Voorhees
C. H. Walters

Subgroup on Design and Materials (SC XII)

M. D. Rana, *Chair*
C. Becht IV
D. A. Canonico
W. D. Doty
G. G. Karcher
M. Manikkam
S. L. McWilliams
T. P. Pastor
M. D. Pham
J. L. Rademacher
T. A. Rogers
C. M. Serratella
A. P. Varghese
M. R. Ward
E. A. Whittle

Subgroup on Fabrication and Inspection (SC XII)

S. V. Voorhees, *Chair*
J. A. Byers
D. A. Canonico
M. L. Coats
J. J. Engelking
B. L. Gehl
L. D. Holsinger
D. J. Kreft
G. McRae
M. R. Minick

Subgroup on General Requirements (SC XII)

C. H. Hochman, *Chair*
T. W. Alexander
D. M. Allbritten
C. A. Betts
J. F. Cannon
J. L. Freiler
W. L. Garfield
M. A. Garrett
K. L. Gilmore
T. B. Lee
N. J. Paulick
G. R. Stoeckinger
M. R. Toth
C. H. Walters
L. Wolpert

SUBCOMMITTEE ON BOILER AND PRESSURE VESSEL ACCREDITATION (SC-BPVA)

K. I. Baron, *Secretary*
M. B. Doherty
P. D. Edwards
R. M. Elliott
P. C. Hackford
W. C. LaRochelle
B. B. MacDonald
L. E. McDonald
K. M. McTague
R. K. Reamey
M. L. Sisk
N. Surtees
D. E. Tanner
B. C. Turczynski
D. E. Tuttle
V. Bogosian, *Alternate*
M. A. DeVries, *Alternate*
C. E. Ford, *Alternate*
J. W. Frey, *Alternate*
T. E. Hansen, *Alternate*
L. J. Kuchera, *Alternate*
K. T. Lau, *Alternate*
G. P. Milley, *Alternate*
B. R. Morelock, *Alternate*
J. D. O'Leary, *Alternate*
J. A. West, *Alternate*
R. V. Wielgoszinski, *Alternate*
A. J. Spencer, *Honorary Member*

SUBCOMMITTEE ON NUCLEAR ACCREDITATION (SC-NA)

R. R. Stevenson, *Chair*
W. C. LaRochelle, *Vice Chair*
M. C. Tromba, *Secretary*
V. Bogosian
M. N. Bressler
G. Deily
S. M. Goodwin
K. A. Huber
M. Kotb
R. P. McIntyre
M. R. Minick
H. B. Prasse
T. E. Quaka
A. T. Roberts III
P. D. Edwards, *Alternate*
B. G. Kovarik, *Alternate*
C. Lizotte, *Alternate*
D. E. Tanner, *Alternate*
R. V. Wielgoszinski, *Alternate*
H. L. Wiger, *Alternate*
O. E. Trapp, *Staff Representative*

SUBCOMMITTEE ON DESIGN (SC-D)

R. J. Basile, *Chair*
E. H. Maradiaga, *Secretary*
R. W. Barnes
M. R. Breach
R. P. Deubler
G. G. Graven
R. I. Jetter
D. P. Jones
R. W. Mikitka
U. R. Miller
W. J. O'Donnell
R. D. Schueler, Jr.
A. Selz

Subgroup on Design Analysis (SC-D)

M. R. Breach
P. J. Conlisk
R. J. Gurdal
G. L. Hollinger
D. P. Jones
A. Kalnins
W. J. Koves
O. Maekawa
G. Taxacher
E. L. Thomas, Jr.
R. A. Whipple

Subgroup on Elevated Temperature Design (SC-D)

R. I. Jetter, *Chair*
C. Becht IV
J. Cervenka
D. S. Griffin
M. H. Jawad
W. J. O'Donnell
D. A. Osage
J. S. Porowski
D. F. Shaw
M. S. Shelton

Subgroup on Fatigue Strength (SC-D)

W. J. O'Donnell, *Chair*
P. R. Donavin
R. J. Gurdal
J. A. Hayward
P. Hirschberg
P. Hsu
D. P. Jones
G. Kharshafdjian
C. Lawton
S. Majumdar
M. J. Manjoine
T. Nakamura
G. Taxacher
H. H. Ziada

Subgroup on Openings (SC-D)

M. R. Breach, *Chair*
R. W. Mikitka, *Secretary*
G. G. Graven
V. T. Hwang
J. C. Light
R. B. Luney
J. P. Madden
D. R. Palmer
J. A. Pfeifer
M. D. Rana
E. C. Rodabaugh

Special Working Group on Bolted Flanged Joints (SC-D)

R. W. Mikitka, *Chair*
G. D. Bibel
E. Michalopoulos
S. N. Pagay
P. G. Scheckermann
R. W. Schneider
R. D. Schueler, Jr.
A. Selz
M. S. Shelton

SUBCOMMITTEE ON SAFETY VALVE REQUIREMENTS (SC-SVR)

S. F. Harrison, Jr., *Chair*
J. A. West, *Vice Chair*
U. D'Urso, *Secretary*
J. F. Ball
S. Cammeresi
J. A. Cox
R. D. Danzy
D. B. Demichael
R. J. Doelling
H. I. Gregg
P. C. Hackford
W. F. Hart
C. A. Neumann
D. J. Scallan
A. J. Spencer
J. C. Standfast
Z. Wang

Subgroup on Design (SC-SVR)

J. A. West, *Chair*
R. D. Danzy
R. J. Doelling
H. I. Gregg
D. Miller
A. J. Spencer
T. R. Tarbay

Subgroup on Testing (SC-SVR)

J. A. Cox, *Chair*
S. Cammeresi
J. E. Cierpiot
G. D. Goodson
W. F. Hart
K. C. Roy
D. J. Scallan
Z. Wang

Subgroup on General Requirements (SC-SVR)

D. B. Demichael, *Chair*
J. F. Ball
G. Brazier
J. P. Glaspie
P. C. Hackford
C. A. Neumann
J. W. Ramsey
J. W. Richardson
J. C. Standfast

PERSONNEL

Officers of the ASTM Committee

(Cooperating in the Development
of the Specifications Herein)

As of December 31, 2003

B2 COMMITTEE ON NONFERROUS METALS AND ALLOYS

P. K. Whitcraft, *Chair*
J. M. Kuzmech, *1st Vice Chair*
J. P. Malmgreen, *2nd Vice Chair*
J. H. Michel, *Recording Secretary*
T. J. Mach, *Membership Secretary*
R. F. Lynch, *Honorary Chair*
J. Adkins, *Staff Manager*

B5 COMMITTEE ON COPPER AND COPPER ALLOYS

T. C. Pilkington, *Chair*
E. R. Boes, *1st Vice Chair*
J. Schuster, *2nd Vice Chair*
T. J. Eagle, *Secretary*
A. G. Kireta, Jr., *Membership Secretary*
L. Morrissey, Jr., *Staff Manager*

B7 COMMITTEE ON LIGHT METALS AND ALLOYS

B. P. Cochran, *Chair*
J. W. Mitchell, *Vice Chair*
F. Li, *Secretary*
J. G. Patel, *Membership Secretary*
D. Schultz, *Staff Manager*

B10 COMMITTEE ON REACTIVE AND REFRACTORY METALS AND ALLOYS

A. M. Garde, *Chair*
D. K. Frey, *1st Vice Chair*
M. Morel, *2nd Vice Chair*
J. A. Mountford, Jr., *Secretary*
J. Adkins, *Staff Manager*

PREFACE

The American Society of Mechanical Engineers (ASME) and the American Society for Testing and Materials (ASTM) have cooperated for more than fifty years in the preparation of material specifications adequate for safety in the field of pressure equipment for ferrous and nonferrous materials, contained in Section II (Part A — Ferrous and Part B — Nonferrous) of the ASME Boiler and Pressure Vessel Code.

The evolution of this cooperative effort is contained in Professor A. M. Greene's "History of the ASME Boiler Code," which was published as a series of articles in *Mechanical Engineering* from July 1952 through August 1953 and is now available from ASME in a special bound edition. The following quotations from this history, which was based upon the minutes of the ASME Boiler and Pressure Vessel Committee, will help focus on the cooperative nature of the specifications found in Section II, Material Specifications.

"General discussion of material specifications comprising Paragraphs 1 to 112 of Part 2 and the advisability of having them agree with ASTM specifications," (1914).

"ASME Subcommittee appointed to confer with ASTM," (1916).

"Because of this cooperation the specifications of the 1918 Edition of the ASME Boiler Code were more nearly in agreement with ASTM specifications. In the 1924 Edition of the Code, 10 specifications were in complete agreement with ASTM specifications, 4 in substantial agreement and 2 covered materials for which ASTM had no corresponding specifications."

"In Section II, Material Specifications, the paragraphs were given new numbers beginning with S-1 and extending to S-213," (1925).

"Section II was brought into agreement with changes made in the latest ASTM specifications since 1921," (1932).

"The Subcommittee on Material Specifications arranged for the introduction of the revisions of many of the specifications so that they would agree with the latest form of the earlier ASTM specifications...," (1935).

From the preceding, it is evident that many of the material specifications were prepared by the Boiler and Pressure Vessel Code Committees, then subsequently, by cooperative action, modified and identified as ASTM specifications. Section II, Parts A and B, currently contain many material specifications which are identical with the corresponding ASTM specifications and some which have been modified for Code usage.

In 1969, the American Welding Society began publication of specifications for welding rods, electrodes, and filler metals, hitherto issued by ASTM. The Boiler and Pressure Vessel Committee has recognized this new arrangement, and is now working with AWS on these specifications. Section II, Part C, contains the welding material specifications approved for Code use.

In 1992, the ASME Board of Pressure Technology Codes and Standards endorsed the use of non-ASTM material for Boiler and Pressure Vessel Code applications. It is the intent to follow the procedures and practices currently in use to implement the adoption of non-ASTM materials.

All identical specifications are indicated by the ASME/originating organization symbols. The specifications prepared and copyrighted by ASTM, AWS, and other originating organizations are reproduced in the Code with the permission of the respective Society. The ASME Boiler and Pressure Vessel Committee has given careful consideration to each new and revised specification, and has made such changes as they deemed necessary to make the specification adaptable for Code usage. In addition, ASME has furnished ASTM with the basic requirements that should govern many proposed new specifications. Joint action will continue an effort to make the ASTM, AWS, and ASME specifications identical.

To assure that there will be a clear understanding on the part of the users of Section II, ASME publishes both the identical specifications and those amended for Code usage in three parts every three years, in the same page size to match the other sections of the Code, and Addenda are issued annually to provide the latest changes in Section II specifications.

The ASME Boiler and Pressure Vessel Code has been adopted into law by 49 states and many municipalities in the United States and by all of the Canadian provinces.

SPECIFICATIONS LISTED BY MATERIALS

Aluminum and Aluminum Alloys

SB-26/SB-26M	Aluminum-Alloy Sand Castings	1
SB-108	Aluminum-Alloy Permanent Mold Castings	59
SB-209	Aluminum and Aluminum-Alloy Sheet and Plate	233
SB-210	Aluminum and Aluminum-Alloy Drawn Seamless Tubes	247
SB-211	Aluminum and Aluminum-Alloy Bar, Rod, and Wire	259
SB-221	Aluminum and Aluminum-Alloy Extruded Bars, Rods, and Profiles	271
SB-234	Aluminum and Aluminum-Alloy Drawn Seamless Tubes for Condensers and Heat Exchangers	279
SB-241/SB-241M	Aluminum and Aluminum-Alloy Seamless Pipe and Seamless Extruded Tube	289
SB-247	Aluminum-Alloy Die and Hand Forgings	311
SB-308/SB-308M	Aluminum-Alloy 6061-T6 Standard Structural Profiles	391
SB-548	Ultrasonic Inspection of Aluminum-Alloy Plate for Pressure Vessels	717

Cobalt Alloys

SB-815	Cobalt-Chromium-Nickel-Molybdenum-Tungsten Alloy (UNS R31233) Rod	989
SB-818	Cobalt-Chromium-Nickel-Molybdenum-Tungsten Alloy (UNS R31233) Plate, Sheet, and Strip	995

Copper and Copper Alloy Plate, Sheet, Strip, and Rolled Bar

SB-96	Copper-Silicon Alloy Plate, Sheet, Strip, and Rolled Bar for General Purposes and Pressure Vessels	49
SB-152	Copper Sheet, Strip, Plate, and Rolled Bar	119
SB-169	Aluminum Bronze Plate, Sheet, Strip, and Rolled Bar	215
SB-171	Copper-Alloy Plate and Sheet for Pressure Vessels, Condensers, and Heat Exchangers	219
SB-248	General Requirements for Wrought Copper and Copper-Alloy Plate, Sheet, Strip, and Rolled Bar	321
SB-283	Copper and Copper-Alloy Die Forgings (Hot-Pressed)	381

Copper and Copper Alloy Rod, Bar, and Shapes

SB-98/SB-98M	Copper-Silicon Alloy Rod, Bar, and Shapes	53
SB-150	Aluminum Bronze Rod, Bar, and Shapes	107
SB-151	Copper-Nickel-Zinc Alloy (Nickel Silver) and Copper-Nickel Rod and Bar	113
SB-187	Copper Bar, Bus Bar, Rod, and Shapes	225
SB-249	General Requirements for Wrought Copper and Copper-Alloy Rod, Bar, Shapes, and Forgings	337

Copper and Copper Alloy Pipe and Tubes

SB-42	Seamless Copper Pipe, Standard Sizes	19

SB-43	Seamless Red Brass Pipe, Standard Sizes	27
SB-75	Seamless Copper Tube	39
SB-111	Copper and Copper-Alloy Seamless Condenser Tubes and Ferrule Stock	75
SB-135	Seamless Brass Tube	97
SB-251	General Requirements for Wrought Seamless Copper and Copper-Alloy Tube	353
SB-315	Seamless Copper Alloy Pipe and Tube	397
SB-359	Copper and Copper-Alloy Seamless Condenser and Heat Exchanger Tubes With Integral Fins	445
SB-395	U-Bend Seamless Copper and Copper-Alloy Heat Exchanger and Condenser Tubes	487
SB-466	Seamless Copper-Nickel Pipe and Tube	615
SB-467	Welded Copper-Nickel Pipe	623
SB-543	Welded Copper and Copper-Alloy Heat Exchanger Tube	705

Copper Alloy Castings

SB-61	Steam or Valve Bronze Castings	35
SB-62	Composition Bronze or Ounce Metal Castings	37
SB-148	Aluminum-Bronze Sand Castings	101
SB-271	Copper-Base Alloy Centrifugal Castings	377
SB-369	Copper-Nickel Alloy Castings	473
SB-505	Copper-Base Alloy Continuous Castings	659
SB-584	Copper Alloy Sand Castings for General Applications	791
SB-824	General Requirements for Copper Alloy Castings	1001

Copper Test Method

SB-858M	Determination of Susceptibility to Stress Corrosion Cracking in Copper Alloys Using an Ammonia Vapor Test	1015

Nickel and Nickel Alloy Plate, Sheet, and Strip

SB-127	Nickel-Copper Alloy (UNS N04400) Plate, Sheet, and Strip	85
SB-162	Nickel Plate, Sheet, and Strip	139
SB-168	Nickel-Chromium-Iron Alloys (UNS N06600, N06601, N06603, N06690, N06693, N06025, and N06045) and Nickel-Chromium-Cobalt-Molybdenum Alloy (UNS N06617) Plate, Sheet, and Strip	201
SB-333	Nickel-Molybdenum Alloy Plate, Sheet, and Strip	409
SB-409	Nickel-Iron-Chromium Alloy Plate, Sheet, and Strip	515
SB-424	Ni-Fe-Cr-Mo-Cu Alloy (UNS N08825 and UNS N08221) Plate, Sheet, and Strip	533
SB-434	Nickel-Molybdenum-Chromium-Iron Alloys (UNS N10003, UNS N10242) Plate, Sheet, and Strip	553
SB-435	UNS N06002, UNS N06230, UNS N12160, and UNS R30556 Plate, Sheet, and Strip	559
SB-443	Nickel-Chromium-Molybdenum-Columbium Alloy (UNS N06625) and Nickel-Chromium-Molybdenum-Silicon Alloy (UNS N06219) Plate, Sheet, and Strip	567
SB-463	UNS N08020, UNS N08026, and UNS N08024 Alloy Plate, Sheet, and Strip	599
SB-536	Nickel-Iron-Chromium-Silicon Alloys (UNS N08330 and N08332) Plate, Sheet, and Strip	695

SB-575 Low-Carbon Nickel-Molybdenum-Chromium, Low-Carbon Nickel-Chromium-Molybdenum, Low-Carbon Nickel-Chromium-Molybdenum-Copper, Low-Carbon Nickel-Chromium-Molybdenum-Tantalum, and Low-Carbon Nickel-Chromium-Molybdenum-Tungsten Alloy Plate, Sheet, and Strip 769
SB-582 Nickel-Chromium-Iron-Molybdenum-Copper Alloy Plate, Sheet, and Strip 783
SB-599 Nickel-Iron-Chromium-Molybdenum-Columbium Stabilized Alloy (UNS N08700) Plate, Sheet, and Strip 799
SB-620 Nickel-Iron-Chromium-Molydenum Alloy (UNS N08320) Plate, Sheet, and Strip 821
SB-625 UNS N08904, UNS N08925, UNS N08031, UNS N08932, UNS N08926, and UNS R20033 Plate, Sheet, and Strip 841
SB-688 Chromium-Nickel-Molybdenum-Iron (UNS N08366 and UNS N08367) Plate, Sheet, and Strip 923
SB-709 Iron-Nickel-Chromium-Molybdenum Alloy (UNS N08028) Plate, Sheet, and Strip 949
SB-906 General Requirements for Flat-Rolled Nickel and Nickel Alloy Plate, Sheet, and Strip 1043

Nickel and Nickel Alloy Rod, Bar, and Wire

SB-160 Nickel Rod and Bar 125
SB-164 Nickel-Copper Alloy Rod, Bar, and Wire 165
SB-166 Nickel-Chromium-Iron Alloys (UNS N06600, N06601, N06603, N06690, N06693, N06025, and N06045) and Nickel-Chromium-Cobalt-Molybdenum Alloy (UNS N06617) Rod, Bar, and Wire 183
SB-335 Nickel-Molybdenum Alloy Rod 417
SB-408 Nickel-Iron-Chromium Alloy Rod and Bar 507
SB-425 Ni-Fe-Cr-Mo-Cu Alloy (UNS N08825 and UNS N08221) Rod and Bar 545
SB-446 Nickel-Chromium-Molybdenum-Columbium Alloy (UNS N06625) Rod and Bar 583
SB-473 UNS N08020, UNS N08026, and UNS N08024 Nickel Alloy Bar and Wire 635
SB-511 Nickel-Iron-Chromium-Silicon Alloy Bars and Shapes 665
SB-564 Nickel Alloy Forgings 743
SB-572 UNS N06002, UNS N06230, UNS N12160, and UNS R30556 Rod 751
SB-573 Nickel-Molybdenum-Chromium-Iron Alloys (UNS N10003, N10242) Rod 757
SB-574 Low-Carbon Nickel-Molybdenum-Chromium, Low-Carbon Nickel-Chromium-Molybdenum, Low-Carbon Nickel-Molybdenum-Chromium-Tantalum, Low-Carbon Nickel-Chromium-Molybdenum-Copper, and Low-Carbon Nickel-Chromium-Molybdenum-Tungsten Alloy Rod 763
SB-581 Nickel-Chromium-Iron-Molybdenum-Copper Alloy Rod 777
SB-621 Nickel-Iron-Chromium-Molybdenum Alloy (UNS N08320) Rod 827
SB-637 Precipitation-Hardening Nickel Alloy Bars, Forgings, and Forging Stock for High-Temperature Service 859
SB-649 Ni-Fe-Cr-Mo-Cu Low-Carbon Alloy (UNS N08904), Ni-Fe-Cr-Mo-Cu-N Low-Carbon Alloys (UNS N08925, UNS N08031, and UNS N08926), and Cr-Ni-Fe-N Low-Carbon Alloy (UNS R20033) Bar and Wire 867
SB-672 Nickel-Iron-Chromium-Molybdenum-Columbium Stabilized Alloy (UNS N08700) Bar and Wire 885
SB-691 Iron-Nickel-Chromium-Molybdenum Alloys (UNS N08366 and UNS N08367) Rod, Bar, and Wire 937

Nickel and Nickel Alloy Pipe and Tubes

SB-161	Nickel Seamless Pipe and Tube	133
SB-163	Seamless Nickel and Nickel Alloy Condenser and Heat-Exchanger Tubes	153
SB-165	Nickel-Copper Alloy (UNS N04400) Seamless Pipe and Tube	177
SB-167	Nickel-Chromium-Iron Alloys (UNS N06600, N06601, N06603, N06690, N06693, N06025, and N06045) and Nickel-Chromium-Cobalt-Molybdenum Alloy (UNS N06617) Seamless Pipe and Tube	193
SB-407	Nickel-Iron-Chromium Alloy Seamless Pipe and Tube	497
SB-423	Nickel-Iron-Chromium-Molybdenum-Copper Alloy (UNS N08825 and N08221) Seamless Pipe and Tube	529
SB-444	Nickel-Chromium-Molybdenum-Columbium Alloy (UNS N06625) and Nickel-Chromium-Molybdenum-Silicon Alloy (UNS N06219) Pipe and Tube	577
SB-462	Forged or Rolled UNS N06030, UNS N06022, UNS N06200, UNS N08020, UNS N08024, UNS N08026, UNS N08367, UNS N10276, UNS N10665, UNS N10675, and UNS R20033 Alloy Pipe Flanges, Forged Fittings, and Valves and Parts for Corrosive High-Temperature Service	591
SB-464	Welded UNS N08020, UNS N08024, and UNS N08026 Alloy Pipe	611
SB-468	Welded UNS N08020, N08024, and N08026 Alloy Tubes	631
SB-514	Welded Nickel-Iron-Chromium Alloy Pipe	673
SB-515	Welded UNS N08120, UNS N08800, UNS N08810, and UNS N08811 Alloy Tubes	677
SB-516	Welded Nickel-Chromium-Iron Alloy (UNS N06600), UNS N06025, and UNS N06045 Tubes	681
SB-517	Welded Nickel-Chromium-Iron Alloy (UNS N06600, UNS N06603, UNS N06025, and UNS N06045) Pipe	683
SB-535	Nickel-Iron-Chromium-Silicon Alloys (UNS N08330 and N08332) Seamless Pipe and Tube	691
SB-619	Welded Nickel and Nickel-Cobalt Alloy Pipe	813
SB-622	Seamless Nickel and Nickel-Cobalt Alloy Pipe and Tube	833
SB-626	Welded Nickel and Nickel-Cobalt Alloy Tube	853
SB-668	UNS N08028 Seamless Tubes	883
SB-673	UNS N08904, UNS N08925, and UNS N08926 Welded Pipe	893
SB-674	UNS N08904, UNS N08925, and UNS N08926 Welded Tube	899
SB-675	UNS N08366 and UNS N08367 Welded Pipe	905
SB-676	UNS N08366 and UNS N08367 Welded Tube	911
SB-677	UNS N08904, UNS N08925, and UNS N08926 Seamless Pipe and Tube	917
SB-690	Iron-Nickel-Chromium-Molybdenum Alloys (UNS N08366 and UNS N08367) Seamless Pipe and Tube	931
SB-704	Welded UNS N06625, UNS N06219, and UNS N08825 Alloy Tubes	945
SB-705	Nickel-Alloy (UNS N06625, UNS N06219, and UNS N08825) Welded Pipe	947
SB-710	Nickel-Iron-Chromium-Silicon Alloy Welded Pipe	961
SB-729	Seamless UNS N08020, UNS N08026, and UNS N08024 Nickel-Alloy Pipe and Tube	963
SB-751	General Requirements for Nickel and Nickel-Alloy Seamless and Welded Tube	967
SB-775	General Requirements for Nickel and Nickel-Alloy Welded Pipe	975
SB-804	UNS N08367 and UNS N08926 Welded Pipe	981
SB-829	General Requirements for Nickel and Nickel Alloys Seamless Pipe and Tube	1007

Nickel Alloy Castings

SA-494/SA-494M Castings, Nickel and Nickel Alloy 649

Nickel and Nickel Alloy Fittings

SB-366 Factory-Made Wrought Nickel and Nickel Alloy Fittings..... 459

Titanium and Titanium Alloys

SB-265 Titanium and Titanium Alloy Strip, Sheet, and Plate..... 363
SB-338 Seamless and Welded Titanium and Titanium Alloy Tubes for Condensers and Heat Exchangers..... 423
SB-348 Titanium and Titanium Alloy Bars and Billets 435
SB-363 Seamless and Welded Unalloyed Titanium and Titanium Alloy Welding Fittings 455
SB-367 Titanium and Titanium Alloy Castings 467
SB-381 Titanium and Titanium Alloy Forgings..... 477
SB-861 Titanium and Titanium Alloy Seamless Pipe..... 1021
SB-862 Titanium and Titanium Alloy Welded Pipe 1031

Zirconium and Zirconium Alloys

SB-493 Zirconium and Zirconium Alloy Forgings..... 645
SB-523/SB-523M Seamless and Welded Zirconium and Zirconium Alloy Tubes 685
SB-550/SB-550M Zirconium and Zirconium Alloy Bar and Wire 723
SB-551/SB-551M Zirconium and Zirconium Alloy Strip, Sheet, and Plate 731
SB-658/SB-658M Seamless and Welded Zirconium and Zirconium Alloy Pipe..... 877

SPECIFICATION REMOVAL

04

From time to time, it becomes necessary to remove specifications from this Part of Section II. This occurs because the sponsoring society (e.g., ASTM, AWS, CEN) has notified ASME that the specification has either been replaced with another specification, or that there is no known use and production of a material. Removal of a specification from this Section also results in concurrent removal of the same specification from Section IX and from all of the ASME Boiler and Pressure Vessel Construction Codes that reference the material. This action effectively prohibits further use of the material in ASME Boiler and Pressure Vessel Construction.

The following specifications will be dropped from this Section in the next Addenda, unless information concerning current production and use of the material is received before December 1st of this year:

None in this Edition or Addenda.

If you are currently using and purchasing new material to any of these specifications for ASME Boiler and Pressure Vessel Code Construction, and if discontinuance of one or more of these specifications would present a hardship, please notify the Secretary of the ASME Boiler and Pressure Vessel Committee, at the address shown below:

Secretary
ASME Boiler and Pressure Vessel Committee
Three Park Avenue
New York, NY 10016-5990
Tel: (212) 591-8533
Fax: (212) 591-8501

PREPARATION OF TECHNICAL INQUIRIES TO THE BOILER AND PRESSURE VESSEL COMMITTEE

1-100 INTRODUCTION

The ASME Boiler and Pressure Vessel Committee meets regularly to consider written requests for interpretations and revisions to the Code rules, and to develop new rules as dictated by technological development. The Committee's activities in this regard are limited strictly to interpretations of the rules or to the consideration of revisions to the present rules on the basis of new data or technology. As a matter of published policy, ASME does not approve, certify, rate, or endorse any item, construction, proprietary device, or activity, and, accordingly, inquiries requiring such consideration will be returned. Moreover, ASME does not act as a consultant on specific engineering problems or on the general application or understanding of the Code rules. If, based on the inquiry information submitted, it is the opinion of the Committee that the inquirer should seek assistance, the inquiry will be returned with the recommendation that such assistance be obtained.

All inquiries that do not provide the information needed for the Committee's full understanding will be returned.

1-200 INQUIRY FORMAT

Inquiries shall be limited strictly to interpretations of the rules or to the consideration of revisions to the present rules on the basis of new data or technology. Inquiries shall be submitted in the following format.

(a) Scope. Involve a single rule or closely related rules. An inquiry letter concerning unrelated subjects will be returned.

(b) Background. State the purpose of the inquiry, which would be either to obtain an interpretation of Code rules, or to propose consideration of a revision to the present rules. Provide concisely the information needed for the Committee's understanding of the inquiry, being sure to include reference to the applicable Code Section, Division, Edition, Addenda, paragraphs, figures, and tables. If sketches are provided, they shall be limited to the scope of the inquiry.

(c) Inquiry Structure. Prepare statements in a condensed and precise question format, omitting superfluous background information, and, where appropriate, composed in such a way that "yes" or "no" (perhaps with provisos) would be an acceptable reply. This inquiry statement should be technically and editorially correct.

(d) Proposed Reply. State what it is believed that the Code requires. If in the inquirer's opinion a revision to the Code is needed, recommended wording shall be provided.

1-300 SUBMITTAL

Inquiries shall preferably be submitted in typewritten form; however, legible handwritten inquiries will also be considered. They shall include the name and mailing address of the inquirer, and be mailed to the following address:

Secretary
ASME Boiler and Pressure Vessel Committee
Three Park Avenue
New York, NY 10016-5990

GUIDELINE ON THE APPROVAL OF NEW MATERIALS UNDER THE ASME BOILER AND PRESSURE VESSEL CODE

Code Policy. It is the policy of the ASME Boiler and Pressure Vessel Committee to adopt for inclusion in Section II only such specifications as have been adopted by the American Society for Testing and Materials (ASTM), by the American Welding Society (AWS), and by other recognized national or international organizations.

It is expected that requests for Code approval will normally be for materials for which there is a recognized national or international specification. For materials made to a recognized national or international specification other than those of ASTM or AWS, the inquirer shall give notice to the standards developing organization that a request has been made to ASME for adoption of their specification under the ASME Code and shall request that the organization grant ASME permission to reprint the specification. For other materials, a request shall be made to ASTM, AWS, or a recognized national or international organization to develop a specification that can be presented to the Code Committee.

It is the policy of the ASME Boiler and Pressure Vessel Committee to consider requests to adopt new materials only from boiler, pressure vessel, or nuclear power plant component Manufacturers or end users. Further, such requests should be for materials for which there is a reasonable expectation of use in a boiler, pressure vessel, or nuclear power plant component constructed to the rules of one of the Sections of this Code.

Application. The inquirer shall identify to the Committee the Section or Sections and Divisions of the Code in which the new material is to be incorporated, the temperature range of application, whether cyclic service is to be considered, and whether external pressure service is to be considered. The inquirer shall identify all product forms, size ranges, and specifications for which incorporation is desired.

Mechanical Properties. Together with the specification for the material, the inquirer shall furnish the Committee with adequate data on which to base design values for inclusion in the applicable tables. The data shall include values of ultimate tensile strength, yield strength, reduction of area, and elongation, at 100°F (or 50°C) intervals, from room temperature to 100°F (or 50°C) above the maximum intended use temperature, unless the maximum intended use temperature does not exceed 100°F. Any heat treatment that is required to produce the mechanical properties should be fully described.

If adoption is desired at temperatures at which time-dependent behavior may be expected to control design values, stress-rupture and creep rate data for these time-dependent properties shall be provided, starting at temperatures about 50°F (or 25°C) below the temperature where time-dependent properties may govern (see Appendix 1 of Section II, Part D) and extending to about 100°F (or 50°C) above the maximum intended use temperature. The longest rupture time at each test temperature must be in excess of 6000 hr and the shortest about 100 hr, with at least three additional tests at stresses selected to provide rupture times nominally equally spaced in log (time); i.e., times nominally of 100, 300, 800, 2200, and 6000 hr at each test temperature. Obviously, longer times and additional tests are beneficial. The interval between successive test temperatures shall be chosen such that rupture lives shall not differ by more than a factor of about 10 at any given stress for two adjacent temperatures. In general, test temperatures should be in about 50°F (or 25°C) intervals if maximum test times are no longer than 6000 hr. The goal of the testing is to facilitate data analysis to estimate the average and minimum stresses for rupture in 100,000 hr and an average creep rate of 10^{-5} %/hr for each temperature where design stresses are established. Alternative test plans that deviate from the prior description but achieve the overall objective may be considered.

Minimum creep rate data shall be provided over the same range of temperatures as above, with the lowest

stress at each temperature selected to achieve a minimum creep rate of 1.0 to 2.0 × 10^{-4} %/hr or less. Creep rate data may be obtained in the course of stress-rupture testing or may be obtained on additional specimens. If it can be conclusively demonstrated that creep rate does not control the design stresses, the creep rate data may be sparse in relation to the stress-rupture data. Submission of creep curves for evaluation of creep rate behavior is acceptable and encouraged.

For materials that will be used in welded applications, sufficient time-dependent data shall be provided for weldments and filler metals to allow ASME to assess the properties in comparison with the base material. In the time-dependent range, this includes providing stress-rupture data for specimen tests in excess of 6000 hr at each temperature and for each welding process. In addition, minimum creep rate data on filler metals shall also be provided to rates below 1.0 to 2.0 × 10^{-4} %/hr.

If adoption at temperatures below room temperature is requested, and if it is desired to take design advantage of increased strength at lower temperatures, data on the time-independent properties shall be provided at 100°F (or 50°C) intervals to and including the lowest intended use temperature.

Notch toughness data shall be provided for materials for which Code toughness rules would be expected to apply. The data shall include test results for the intended lowest service metal temperature and for the range of material thicknesses desired. For welded construction, the notch toughness data shall include the results of Code toughness tests for weld metal and heat-affected zone for weldments made by the intended welding processes.

If the material is to be used in components that operate under external pressure, stress–strain curves (tension or compression) shall be furnished, at 100°F (or 50°C) intervals over the range of design temperatures desired. External pressure charts are based on the early portion (up to 1% strain) of the stress–strain curve. The stress–strain curve (not load versus extension) shall be determined using a Class B-2 or better accuracy extensometer as defined in ASTM E 83. Numerical data, when available, should be submitted. The data should include the original cross-sectional area of the test specimen and stress–strain curves with units marked on them.

If the material is to be used in cyclic service and the construction Code in which adoption is desired requires explicit consideration of cyclic behavior, fatigue data shall also be furnished over the range of design temperatures desired.

In general, for all mechanical properties, data shall be provided from at least three heats of material meeting all of the requirements of a specification for at least one product form for which adoption is desired, for each test at each test temperature. When adoption for both cast and wrought product forms is desired, data from at least three heats each of a wrought and of a cast product form shall be submitted. It is desired that the data represent all product forms for which adoption is desired. For product forms for which the properties may be size dependent, data from products of different sizes, including the largest size for which adoption is desired, shall be provided.

Test methods employed shall be those referenced in or by the material specifications, or shall be appropriate ASTM test methods or recommended practices for the properties tested.

Information describing service experience in the temperature range contemplated will be useful to the Committee.

Other Properties. The inquirer shall furnish to the Committee adequate data necessary to establish values for coefficient of thermal expansion, thermal conductivity and diffusivity, Young's modulus, shear modulus, and Poisson's ratio, when the construction Code in which adoption is desired requires explicit consideration of these properties. Data shall be provided over the range of temperatures for which the material is to be used.

Weldability. The inquirer shall furnish complete data on the weldability of material intended for welding, including data on procedure qualification tests made in accordance with the requirements of Section IX. Welding tests shall be made over the full range of thickness in which the material is to be used. Pertinent information, such as postweld heat treatment required, susceptibility to air hardening, effect of welding procedure and heat-affected zone and weld metal notch toughness, and the amount of experience in welding the material shall be given.

Physical Changes. For new materials, it is important to know the structural stability characteristics and the degree of retention of properties with exposure at temperature. The influence of fabrication practices, such as forming, welding, and thermal treatment, on the mechanical properties, ductility, and microstructure of the material are important, particularly where degradation in properties may occur. Where particular temperature ranges of exposure or heat treatment, cooling rates, combinations of mechanical working and thermal treatments, fabrication practices, exposure to particular

environments, etc., cause significant changes in the mechanical properties, microstructure, resistance to brittle fracture, etc., it is of prime importance to call attention to those conditions that should be avoided in service or in manufacture of parts or vessels from the material.

Requests for Additional Data. The Committee may request additional data, including data on properties or material behavior not explicitly treated in the construction Code in which adoption is desired.

New Materials Checklist. To assist inquirers desiring Code coverage for new materials, or extending coverage of existing materials, the Committee has developed the following checklist of items that ought to be addressed by each inquiry. The Committee reserves the right to request additional data and application information when considering new materials.

(a) Has a qualified inquirer request been provided?

(b) Has a request either for revision to existing Code requirements or for a Code Case been defined?

(c) Has a letter to ASTM or AWS been submitted requesting coverage of the new material in a specification, and has a copy been submitted to the Committee? Alternatively, is this material already covered by a specification issued by a recognized national or international organization and has an English language version been provided?

(d) Has the construction Code and Division coverage been identified?

(e) Has the material been defined as ferrous or nonferrous and has the application (product forms, size range, and specification) been defined?

(f) Has the range (maximum/minimum) of temperature application been defined?

(g) Has mechanical property data been submitted (ultimate tensile strength, yield strength, reduction of area, and elongation at 100°F or 50°C intervals, from room temperature to 100°F or 50°C above the maximum intended use temperature for three heats of appropriate product forms and sizes)?

(h) If requested temperatures of coverage are above those at which time-dependent properties begin to govern design values, has appropriate time-dependent property data for base metal, weld metal, and weldments been submitted?

(i) If coverage below room temperature is requested, has appropriate mechanical property data below room temperature been submitted?

(j) Have toughness considerations required by the construction Code been defined and has appropriate data been submitted?

(k) Have external pressure considerations been defined and have stress–strain curves been submitted for the establishment of external pressure charts?

(l) Have cyclic service considerations and service limits been defined and has appropriate fatigue data been submitted?

(m) Has physical properties data (coefficient of thermal expansion, thermal conductivity and diffusivity, Young's modulus, shear modulus, Poisson's ratio) been submitted?

(n) Have welding requirements been defined and has procedure qualification test data been submitted?

(o) Has influence of fabrication practices on material properties been defined?

Requirements for Requests for ASME Acceptance of Material Specifications of Recognized National or International Organizations Other Than ASTM or AWS. The Committee will consider only requests for specifications in the English language and in U.S. or SI/metric units. The Committee will consider accepting specifications of recognized national or international organizations, such as, but not limited to, American Petroleum Institute (API), ASTM, AWS, Canadian Standards Association (CSA), European Committee for Standardization (CEN), and Japanese Standards Association (JIS). Material specifications of other than national or international organizations, such as those of material producers and suppliers, will not be considered for acceptance.

Requirements for Recognized National or International Specifications. Acceptable material specifications will be identified by date or edition. Approved edition(s) will be stated in the subtitle of the ASME specification. Eventually, acceptable previous editions will be listed in Section II, Parts A and B. Minimum requirements that must be contained in a material specification for which acceptance is being requested include such items as name of national or international organization, scope, reference documents, process, manufacture, conditions for delivery, heat treatment, chemical and tensile requirements, forming properties, testing specifications and requirements, workmanship, finish, marking, inspection, and rejection.

Publication of Recognized National or International Specifications. Specifications for which ASME has not been given permission to publish by the originating organization will be referenced on a cover sheet in Section II, Parts A and B. Information on obtaining a copy of those documents will be maintained in those Parts. Documents that are referenced in accepted national or international material specifications will

not be published by ASME. However, information on obtaining a copy of those documents will be maintained in Section II, Parts A and B. Additions and exceptions to the material specification will be noted in the subtitle of the specification.

Code Case. The Code Committee will consider the issuance of an ASME Code Case, to be effective for a period of 3 years, permitting the use of a new material, provided that the following conditions are met:

(a) the inquirer provides evidence that a request for coverage of the material in a specification has been made to ASTM or a recognized national or international organization

(b) the material is commercially available and can be purchased within the proposed specification requirements

(c) the inquirer shows that there will be a reasonable demand for the material by industry and that there exists an urgency for approval by means of a Code Case

(d) the requests for approval of the material shall clearly describe it in specification form, including such items as scope, process, manufacture, conditions for delivery, heat treatment, chemical and tensile requirements, forming properties, testing specifications and requirements, workmanship, finish, marking, inspection, and rejection

(e) all other requirements identified previously under Code Policy and Application apply

(f) the inquirer shall furnish the Code Committee with all the data specified in this Appendix

ACCEPTABLE ASTM EDITIONS

All material allowed by the various Code Sections and used for construction within the scope of their rules shall be furnished in accordance with the Material Specifications contained within Section II and this Appendix except where otherwise provided in Code Cases or in the applicable Section of the Code. Materials covered by these Specifications are acceptable for use in items covered by the Code Sections only to the degree indicated in the applicable Section. Materials for Code use should preferably be ordered, produced, and documented on this basis; however, material produced under an ASTM Specification may be used in lieu of the corresponding ASME Specification as listed in this Appendix. Material produced to an ASME or ASTM Specification with requirements different from the requirements of the corresponding Specification may also be used in accordance with the above, provided the material manufacturer or vessel manufacturer certifies with evidence acceptable to the Authorized Inspector that the corresponding Specification requirements have been met. This Appendix lists the Specifications and acceptable dates of issue as well as the Book sections of the ASME Boiler Code in which the specification is approved for use.

Specification	Book Section I	III	IV	VIII-1	VIII-2	VIII-3	XII	Nuc. Code Case	Non Nuc. Code Case	Latest Adopted ASTM	Other Acceptable ASTM Editions
SB-26/SB-26M	...	×	...	×	...	...	×	...	×	99	88 through 99
Identical except that certification has been made mandatory and ASME welding requirements are invoked.											
SB-42	×	×	×	×	...	...	×	...	...	96	89 through 96
Identical for the alloys covered except for the deletion of paras. 4.1.6 and 4.2, and the Supplementary Requirements for government procurement. Certification has been made mandatory.											
SB-43	×	×	×	×	...	...	×	...	...	96	88 through 96
Identical for the alloy and temper covered except for editorial differences and the deletion of para. 4.1.5, the Supplementary Requirements for government procurement, and the Appendix. Certification has been made mandatory.											
SB-61	×	×	×	×	...	...	×	...	...	02	86 through 02
Identical for the alloy covered except for the deletion of Appendix X1. Certification has been made mandatory.											
SB-62	×	×	×	×	...	...	×	×	...	02	86 through 02
Identical for the alloy covered except for the deletion of Appendix X1. Certification has been made mandatory.											
SB-75	×	×	×	×	...	...	×	...	...	95a	89 through 95a
Identical for the alloys and tempers covered except that mechanical testing and certification have been made mandatory.											
SB-96	...	×	×	×	×	...	×	...	...	93	86 through 93
Identical for the alloy and temper covered except for the deletion of supplementary requirements for government procurement. Certification has been made mandatory.											
SB-98/SB-98M	...	×	×	×	×	...	×	...	...	98	84 through 98
Identical for the alloys and tempers covered except that Section 8.1.1 was removed so that tensile testing rather than Rockwell hardness testing is required to show conformance with mechanical properties. Certification has been made mandatory.											
SB-108	...	...	...	×	...	...	×	...	×	99	87 through 99
Identical except that certification has been made mandatory, welding is in accordance with ASME, and editorial revisions have been made to Table 1.											

Specification	Book Section I	III	IV	VIII-1	VIII-2	VIII-3	XII	Nuc. Code Case	Non Nuc. Code Case	Latest Adopted ASTM	Other Acceptable ASTM Editions
SB-111	×	×	×	×	×	...	×	...	...	95	88 through 95
Identical for the alloys and tempers covered except for the deletion of Supplementary Requirements for government procurement and editorial differences. Certification has been made mandatory.											
SB-127	...	×	...	×	×	...	×	...	...	93a	85 through 93a
Identical											
SB-135	...	×	...	×	...	...	×	...	...	96	86a through 96
Identical for Copper Alloy UNS No. C23000 only in the annealed temper, except for 8.1, the deletion of Supplementary Requirements for government procurement, and editorial differences.											
SB-148	...	×	...	×	...	...	×	×	...	97$^{\epsilon}$1	88 through 97$^{\epsilon}$1
Identical for the alloys and tempers covered. Supplementary Requirements have been deleted, certification has been made mandatory, and weld repair requirements in accordance with ASME Section IX have been added.											
SB-150	...	×	...	×	×	...	×	×	...	95a	86 through 95a
Identical for the alloys, tempers, and product forms covered, except for the deletion of Supplementary Requirements for government procurement. Certification has been made mandatory.											
SB-151	...	×	...	...	...	...	...	...	...	94	83a through 94
Identical											
SB-152	...	×	×	×	...	...	×	...	...	97	87 through 97
Identical for the alloys and tempers covered except for the deletion of Supplementary Requirements, and editorial differences. Certification and Product Identification have been made mandatory.											
SB-160	...	×	...	×	×	...	×	...	...	99	87 through 99
Identical except that certification has been made mandatory.											
SB-161	...	×	...	×	×	...	×	...	...	93	87 through 93
Identical except for the deletion of 1.1.1 and Appendix X1, and editorial differences. Certification has been made mandatory.											
SB-162	...	×	...	×	×	...	×	...	...	99	85 through 99
Identical except that certification has been made mandatory.											
SB-163	...	×	...	×	×	...	×	×	×	01	89 through 01
Identical except for revisions to the flaring test requirements in paras. 6.3 and 10.5 and a revision to para. 9.1.2. Certification has been made mandatory and the Supplementary Requirements for U.S. government and Appendix X2 have been deleted.											
SB-164	...	×	×	×	×	×	×	...	×	93	84 through 93
Identical except for the deletion of forging quality and Supplementary Requirements for U.S. government procurement. Certification has been made mandatory.											
SB-165	...	×	×	×	×	×	×	...	...	93	87 through 93
Identical except for the deletion of 1.1.1, Appendix X1, and Supplementary Requirements, and editorial differences. Certification has been made mandatory.											
SB-166	...	×	...	×	×	×	×	×	×	01	86 through 01
Identical except for the deletion of the Supplementary Requirements for government procurement and addition of UNS N06617 heat treatment requirements. Certification has been made mandatory.											
SB-167	...	×	...	×	×	×	×	×	×	01	88 through 01
Identical except for the deletion of the Supplementary Requirements for government procurement, the deletion of Appendix X1, and the addition of UNS N06617 heat treatment requirements. Certification has been made mandatory.											
SB-168	...	×	...	×	×	...	×	×	×	01	86 through 01
Identical except for the deletion of the Supplementary Requirements for government procurement and addition of UNS N06617 heat treatment requirements. Certification has been made mandatory.											

Specification	Book Section I	III	IV	VIII-1	VIII-2	VIII-3	XII	Nuc. Code Case	Non Nuc. Code Case	Latest Adopted ASTM	Other Acceptable ASTM Editions
SB-169	...	×	...	×	×	...	×	×	...	95	85a through 95
Identical for the alloy and temper covered except for the deletion of supplementary requirements for government procurement, and editorial differences. Certification has been made mandatory.											
SB-171	...	×	×	×	×	...	×	...	...	95	86 through 95
Identical for the alloys covered except for editorial differences. Certification has been made mandatory.											
SB-187	...	×	...	×	×	...	×	...	...	97	94 through 97
Identical for the alloys and products covered except for the deletion of requirements for government procurement. Requirements for the H04 temper have been deleted.											
SB-209	...	×	...	×	×	...	×	...	×	96	88 through 96
Identical for the alloys and tempers covered except for editorial differences in 4, 9, 11, 13, 14, and 16 and Tables 2 and 3, and the deletion of Tables 5 and 6. Certification and product marking have been made mandatory.											
SB-210	...	×	...	×	×	...	×	...	...	95	88 through 95
Identical for the alloys and tempers covered except for editorial differences. Testing for leaks and certification have been made mandatory.											
SB-211	...	×	...	×	...	...	×	...	...	99	88 through 99
Identical except that certification has been made mandatory.											
SB-221	...	×	...	×	×	...	×	...	...	96	88 through 96
Identical for the alloys, tempers, and product forms covered except for editorial differences. Certification has been made mandatory.											
SB-234	...	×	...	×	...	...	×	...	...	95	88 through 95
Identical except for editorial differences. Certification has been made mandatory.											
SB-241/SB-241M	...	×	...	×	×	...	×	...	×	99	88 through 99
Identical except for editorial differences in Table 1 and para. 4.2.5. Certification has been made mandatory.											
SB-247	...	×	...	×	...	...	×	...	×	95a	88 through 95a
Identical for the alloys covered except for the deletion of rolled ring forging and editorial differences. Certification and marking have been made mandatory.											
SB-248	...	...	...	...	...	...	...	...	...	96	87 through 96
Identical for the applicable specifications and alloys covered except for the deletion of Supplementary Requirements for government procurement. Certification has been made mandatory.											
SB-249	...	...	...	...	...	...	...	...	×	94a	86 through 94a
Identical for the alloys and tempers covered. The option to use ammonia vapor testing in place of mercurous nitrate testing was added.											
SB-251	...	...	...	...	...	...	...	...	...	97	88 through 97
Identical for the specifications shown and alloys covered except for the deletion of Supplementary Requirements and editorial differences. Certification has been made mandatory.											
SB-265	...	×	...	×	×	...	×	×	×	99	89 through 99
Identical for all grades except for section 15.1, which requires mandatory certification.											
SB-271	...	×	...	×	...	...	×	×	...	96	84 through 96
Identical for the alloys covered, except for the deletion of requirements for government procurement and the suggested heat treatment requirements. Certification has been made mandatory.											
SB-283	...	...	×	×	...	...	×	...	...	99a	85 through 99a
Identical for the alloys and tempers covered.											
SB-308/SB-308M	...	×	...	×	×	...	×	...	...	96	88 through 96
Identical except for editorial differences. Certification has been made mandatory.											
SB-315	...	×	×	×	...	...	×	...	...	93	88 through 93
Identical for the alloy and temper covered except for editorial differences. Certification and 100% hydrostatic testing have been made mandatory.											

Specification	Book Section I	III	IV	VIII-1	VIII-2	VIII-3	XII	Nuc. Code Case	Non Nuc. Code Case	Latest Adopted ASTM	Other Acceptable ASTM Editions
SB-333	...	×	...	×	×	...	×	...	...	95a	84 through 95a
Identical except that certification has been made mandatory.											
SB-335	...	×	...	×	×	...	×	...	...	95	83a through 95
Identical											
SB-338	...	×	...	×	×	...	×	×	...	99	83a(R87) through 99
Identical for all grades except for section 21.1, which requires mandatory certification.											
SB-348	...	×	...	×	×	...	×	×	...	00	83(R87) through 00
Identical for all grades except for section 15.1, which requires mandatory certification.											
SB-359	...	×	×	...	...	...	...	...	...	95	87 through 95
Identical for the alloys covered except for editorial differences. Certification has been made mandatory.											
SB-363	...	×	...	...	...	...	×	×	...	00	83 through 00
Identical for all grades except for section 11.3, which requires mandatory certification.											
SB-366	...	...	...	×	...	...	×	×	×	97a	89 through 97a
Identical except that certification has been made mandatory.											
SB-367	...	...	...	×	...	...	×	...	...	93	87 through 93
Identical											
SB-369	...	×	...	...	...	...	...	...	...	96	87 through 96
Identical for the alloys covered except for mandatory certification and deletion of Supplementary Requirements for government procurement.											
SB-381	...	×	...	×	×	...	×	×	...	00	87 through 00
Identical for all grades except for section 15.1, which requires mandatory certification, and corrected footnote references in Table 1.											
SB-395	...	×	×	×	×	...	×	...	...	93	88 through 93
Identical for the alloys and tempers covered except for the deletion of Supplementary Requirements for government procurement, and editorial differences. Certification has been made mandatory.											
SB-407	×	×	...	×	×	×	...	×	×	96	88 through 96
Identical except that certification has been made mandatory.											
SB-408	×	×	...	×	×	×	...	×	×	96	87 through 96
Identical except for the deletion of hot-worked, as-hot-worked, and forging quality conditions. Certification has been made mandatory.											
SB-409	×	×	...	×	×	×	...	×	×	96a	87 through 96a
Identical except that certification has been made mandatory.											
SB-423	×	×	...	×	×	...	×	×	×	02	84$^{\epsilon 1}$ through 02
Identical except that certification has been made mandatory and para. 4.1.7 has been changed to reference para. 9.1.											
SB-424	×	×	...	×	×	...	×	...	×	93	87 through 93
Identical except that certification has been made mandatory and a report of test results must be furnished.											
SB-425	×	×	...	×	×	...	×	...	...	99	84 through 99
Identical except that certification has been made mandatory.											
SB-434	...	...	...	×	×	...	×	...	...	00	83a through 00
Identical except that certification has been made mandatory.											
SB-435	...	×	...	×	×	...	×	×	×	97	87a through 97
Identical except that certification has been made mandatory.											
SB-443	...	×	...	×	...	...	×	...	×	00$^{\epsilon 1}$	84 through 00$^{\epsilon 1}$
Identical except that certification has been made mandatory.											

Specification	Book Section I	III	IV	VIII-1	VIII-2	VIII-3	XII	Nuc. Code Case	Non Nuc. Code Case	Latest Adopted ASTM	Other Acceptable ASTM Editions
SB-444	...	×	...	×	...	×	×	×	×	00$^{\epsilon}$1	84 through 00$^{\epsilon}$1
Identical except that certification has been made mandatory.											
SB-446	...	×	...	×	...	×	×	...	×	93	84 through 93
Identical except that certification has been made mandatory.											
SB-462	...	×	...	×	...	...	×	×	×	02	82 through 02
Identical except that certification has been made mandatory.											
SB-463	...	×	...	×	...	...	×	...	×	93	84 through 93
Identical except that certification has been made mandatory.											
SB-464	...	×	...	×	...	...	×	...	×	99	84 through 99
Identical except that certification has been made mandatory.											
SB-466	...	×	×	×	...	...	×	...	...	92a	86 through 92a
Identical for the alloys and tempers covered except for editorial differences. Certification and mechanical testing have been made mandatory.											
SB-467	...	×	...	×	...	...	×	...	...	88	...
Identical except for the deletion of Appendix X2, and that the use of filler metal is prohibited. Certification and product specification marking are mandatory, and editorial differences exist.											
SB-468	...	×	...	×	...	...	×	...	×	99	84 through 99
Identical except that certification has been made mandatory.											
SB-473	...	×	...	×	...	...	×	...	...	95	87 through 95
Identical											
SB-493	...	...	...	×	...	...	...	...	...	01	83(R93) through 01
Identical except for section 15.1, which requires mandatory certification.											
SA-494/SA-494M	...	...	...	×	...	...	×	...	...	99	86 through 99
Identical except that certification has been made mandatory.											
SB-505	...	×	...	...	...	...	...	...	...	96	87 through 96
Identical for the alloy and temper covered except for the deletion of Supplementary Requirements for government procurement. Marking and certification have been made mandatory.											
SB-511	×	...	...	×	×	...	×	...	...	93	87 through 93
Identical											
SB-514	...	...	...	×	×	...	...	...	...	95	85 through 95
Identical except that certification has been made mandatory.											
SB-515	...	...	...	×	×	...	...	...	×	95	85 through 95
Identical except that certification has been made mandatory.											
SB-516	...	...	...	×	×	...	×	...	...	95	85 through 95
Identical											
SB-517	...	...	...	×	×	...	×	...	...	98	85 through 98
Identical except Table 1 was corrected, certification has been made mandatory, and other editorial changes have been made.											
SB-523/SB-523M	...	...	...	×	...	...	...	...	...	01	85 through 01
Identical											
SB-535	×	...	...	×	×	...	×	...	...	99	87 through 99
Identical except that certification has been made mandatory.											

Specification	Book Section I	III	IV	VIII-1	VIII-2	VIII-3	XII	Nuc. Code Case	Non Nuc. Code Case	Latest Adopted ASTM	Other Acceptable ASTM Editions
SB-536	×	...	...	×	×	...	×	...	...	95	87 through 95
Identical											
SB-543	...	×	...	×	...	...	×	...	...	96	88 through 96
Identical for the alloys and tempers covered except for the deletion of Supplementary Requirements for government procurement. Certification has been made mandatory.											
SB-548	...	...	...	...	...	...	...	...	...	90	82 through 90
Identical											
SB-550/SB-550M	...	...	...	×	...	...	...	...	...	01	85 through 01
Identical except for section 16.1, which requires mandatory certification.											
SB-551/SB-551M	...	...	...	×	...	...	...	...	...	01	85 through 01
Identical except for section 16.1, which requires mandatory certification.											
SB-564	...	×	...	×	×	×	×	×	×	00a	86a through 00a
Identical except for the deletion of the Supplementary Requirements for government procurement and that certification has been made mandatory.											
SB-572	...	×	...	×	×	...	×	×	×	97	87a through 97
Identical											
SB-573	...	...	...	×	×	...	×	...	...	00	83a through 00
Identical except that certification has been made mandatory.											
SB-574	...	×	...	×	×	×	×	...	×	99	85 through 99
Identical except that certification has been made mandatory.											
SB-575	...	×	...	×	×	...	×	...	×	99a	86a through 99a
Identical except that certification has been made mandatory.											
SB-581	...	...	...	×	×	...	×	...	×	97	86 through 97
Identical except that certification has been made mandatory.											
SB-582	...	...	...	×	×	...	×	...	×	92	86a through 92
Identical											
SB-584	...	×	×	×	...	...	×	×	...	00	87 through 00
Identical for the alloys and tempers covered. Certification has been made mandatory, and welding/casting repair requirements have been added for alloys C84400 and C90300.											
SB-599	...	...	...	×	...	...	×	...	...	92	85 through 92
Identical											
SB-619	...	×	...	×	×	...	×	...	×	00	87a through 00
Identical except that certification has been made mandatory.											
SB-620	...	...	...	×	...	...	×	...	...	93	84 through 93
Identical											
SB-621	...	...	...	×	...	...	×	...	...	95	83a through 95
Identical											
SB-622	...	×	...	×	×	...	×	...	×	00	87a through 00
Identical except that certification has been made mandatory in para. 4.1.4 and Section 16. Table 1 has been corrected and editorial changes made.											

Specification	Book Section I	III	IV	VIII-1	VIII-2	VIII-3	XII	Nuc. Code Case	Non Nuc. Code Case	Latest Adopted ASTM	Other Acceptable ASTM Editions
SB-625	...	...	...	×	...	...	×	...	×	99	83 through 99
Identical except that certification has been made mandatory.											
SB-626	...	×	...	×	×	...	×	...	×	03	87a through 03 except 01
Identical except that certification has been made mandatory in para. 5.1.6 and Section 9.											
SB-637	...	×	...	...	...	...	×	×	×	93a	84a through 93a
Identical											
SB-649	...	...	...	×	...	...	×	...	×	95	87 through 95
Identical except that certification has been made mandatory.											
SB-658/SB-658M	...	...	...	×	...	...	...	...	...	01	85 through 01
Identical											
SB-668	...	...	...	×	...	...	×	×	×	99	84 through 99
Identical except that certification has been made mandatory.											
SB-672	...	...	...	×	...	...	×	...	...	95	85 through 95
Identical											
SB-673	...	...	...	×	...	...	×	...	×	91	88 through 91
Identical											
SB-674	...	...	...	×	...	...	×	...	×	91	83 through 91
Identical											
SB-675	...	...	...	×	...	...	×	×	×	90a	87 through 90a
Identical except for editorial differences. Certification has been made mandatory.											
SB-676	...	×	...	×	...	...	×	×	×	90	86 through 90
Identical for the classifications covered except for corrections to Table 2 and editorial differences.											
SB-677	...	...	...	×	...	...	×	×	×	99	84 through 99
Identical except that certification has been made mandatory.											
SB-688	...	...	...	×	...	...	×	×	×	95	86 through 95
Identical											
SB-690	...	...	...	×	...	...	×	×	×	93	86 through 93
Identical											
SB-691	...	...	...	×	...	...	×	×	×	95	86 through 95
Identical											
SB-704	...	...	...	×	...	...	×	...	...	00	82(R90) through 00
Identical except that certification has been made mandatory in para. 3.1.8 and editorial corrections have been made.											
SB-705	...	...	...	×	...	...	×	...	...	00	82(R90) through 00
Identical except that certification has been made mandatory.											
SB-709	...	...	...	×	...	...	×	...	...	93	84 through 93
Identical											
SB-710	...	...	...	×	...	...	×	...	...	99	87 through 99
Identical except that certification has been made mandatory.											
SB-729	...	...	...	×	...	...	×	...	...	99	87 through 99
Identical except that certification has been made mandatory.											

Specification	Book Section I	III	IV	VIII-1	VIII-2	VIII-3	XII	Nuc. Code Case	Non Nuc. Code Case	Latest Adopted ASTM	Other Acceptable ASTM Editions
SB-751	...	...	...	...	...	...	...	...	...	90	...
Identical											
SB-775	...	...	...	...	...	...	...	...	...	00	90 through 00
Identical except that certification has been made mandatory.											
SB-804	...	×	...	...	...	...	×	×	...	93	89 through 93
Identical except that the following additional requirements apply.											
SB-815	...	...	...	...	...	...	...	...	...	97	...
Identical except that certification has been made mandatory.											
SB-818	...	...	...	...	...	...	...	...	...	98a	...
Identical except for requiring a report of the test results.											
SB-824	...	...	...	...	...	...	...	...	...	96	93 through 96
Identical for the applicable specifications except for mandatory certification, the deletion of Supplementary Requirements for government procurement, and some editorial changes.											
SB-829	...	...	...	...	...	...	...	...	...	99	92 through 99
Identical except that certification has been made mandatory.											
SB-858M	×	×	×	×	×	...	...	×	×	95	...
Identical											
SB-861	...	×	...	×	...	...	×	...	...	01	95a through 01
Identical for all grades, except for section 21.1, which requires mandatory certification.											
SB-862	...	×	...	×	...	...	×	...	...	01	95 through 01
Identical with ASTM B 862-01 for all grades, except for 20.1, which requires mandatory certification, editorial changes, and corrections in 5.1 and Table 5, which designate the filler metals approved for use during welding. All pipe welded with filler metal intended for applications under the rules of Section VIII-1 of the ASME Boiler and Pressure Vessel Code shall conform to the following: Manufacturer of such products are limited to manufacturers holding the appropriate ASME Certificate of Authorization and Code Symbol Stamp. In addition to conforming to this specification, the manufacturer shall meet all applicable requirements of Section VIII-1 of the Code. The plate used to fabricate the pipe shall conform to SB-265. The product shall be subject to all applicable requirements of Section VIII-1 of the Code including welding, heat treatment, nondestructive examination, authorized inspection at the point of manufacture, and application of the Code Symbol Stamp. The applicable ASME Partial Data Report Form signed by an Authorized Inspector and a certified mill test report shall be furnished for each lot of pipe. The term "lot" applies to all pipe of the same mill heat of material and wall thickness, which is heat-treated, if applicable in one furnace charge. For pipe that is not heat treated, or that is heat treated in a continuous furnace, a lot shall consist of each 200 ft (61 m) or fraction thereof of all pipe if the same mill heat treat and wall thickness subjected to the same heat treatment. For pipe that is heat treated in a batch-type furnace that is controlled within a 50°F range and is equipped with recording pyrometers so that the heating records are available, a lot may be defined the same as for continuous furnaces. Each length of pipe shall be marked in such a manner to identify each such piece with the "lot" and the certified mill test report.											
SB-906	...	...	...	...	...	...	...	...	...	00	...
Identical except that certification has been made mandatory and editorial changes have been made.											

GUIDELINES ON MULTIPLE MARKING OF MATERIALS

B-100 BACKGROUND

A common inquiry topic is the permissibility of using material that is identified with two or more specifications (or grades, classes, or types), even if they have different strengths, or even if one of them is not permitted for use in the construction code of application. The Committee has addressed variants of these questions in several interpretations: I-89-11, II A-92-08, VIII-1-89-269, and VIII-1-89-197.

B-200 GUIDELINES

The construction codes individually define what materials may be used in boilers, vessels, and components constructed in compliance to their rules. If a material meets all of the requirements for a specification for which it is marked, including documentation, if any, and if it meets all requirements for use imposed by the construction code, it may be used. The construction codes, in general, do not address the case of materials marked with more than one specification, grade, class, or type, so these guidelines are offered for clarification.

B-210 ACCEPTABILITY OF MULTIPLE MARKING

Dual or multiple marking is acceptable, as long as the material so marked meets all of the requirements of all the specifications, grades, classes, and types with which it is marked.

All of the measured and controlled attributes of the multiply-marked grades or specifications must overlap (e.g., chemistry, mechanical properties, dimensions, and tolerances) and the material so marked must exhibit values that fall within the overlaps. Further, the controlled but unmeasured attributes of the specifications or grades must overlap (e.g., melting practices, heat treatments, and inspection).

Many specifications or grades have significant overlap of chemistry ranges or properties. It is common for material manufacturers to produce materials that satisfy more than one specification, grade, class, or type. Examples are SA-53 and SA-106 (some grades and classes); SA-213 TP304L and TP304; SA-213 TP304 and TP304H; and SA-106B and SA-106C.

B-220 PROHIBITION ON MULTIPLE MARKING

Dual or multiple marking is not acceptable if two or more specifications to which the material is marked have mutually exclusive requirements.

This prohibition includes more than just chemistry and property requirements. One example is SA-515 and SA-516; the former requires melting to coarse grain practice while the latter requires melting to fine grain practice; another example is SA-213 TP304L and TP304H; the carbon content ranges of these grades have no overlap.

B-230 GRADE SUBSTITUTION

Grade substitution is not permitted. Grade substitution occurs when

(a) the material contains an element (other than nitrogen) that is unspecified for one of the grades marked

(b) the amount of that element present in the material meets the minimum and maximum composition limits for that element in another grade of a specification contained in Section II, Part A or Part B, whether or not it is also so marked.

For example, a material meets all of the composition limits for SA-240 304, contains 0.06C and 0.02N, but also contains 0.45% Ti. This material cannot be marked or provided as meeting SA-240 304 because the Ti content meets the requirements of SA-240 321 [which is Ti greater than 5 × (C + N) but less than 0.7].

Another material, with identical composition, except 0.35% Ti, may be marked SA-240 304, because the Ti content does not meet the minimum requirement for 321. The Ti content is just a residual.

B-240 MARKING SELECTION

If a material is marked with specifications, grades, classes, or types, it may be used with the allowable stresses, design stress intensities, or ratings appropriate for any of the markings on the material, as long as the material specification, grade, class, and type is permitted by the code of construction governing the boiler, vessel, or component in which the material is to be used. However, once the designer has selected which marking applies (specification, grade, class, type, etc.), the designer must use all the design values appropriate for that selection and may not mix and match values from any other specifications, grades, classes, types, etc., with which the material may be marked.

B-250 OTHER MARKINGS

Any other markings, such as markings of non-ASME or non-ASTM material specifications, have no relevance, even if those markings are for materials explicitly prohibited by the construction code being used. That is, as long as the *one* marking, and the documentation required by the material and by the construction code, shows that it meets all the requirements for use of that material in that construction code, any additional markings are irrelevant.

SUMMARY OF CHANGES

The 2004 Edition of this Code contains revisions in addition to the 2001 Edition with 2002 and 2003 Addenda. The revisions are identified with the designation **04** in the margin and, as described in the Foreword, become mandatory six months after the publication date of the 2004 Edition. To invoke these revisions before their mandatory date, use the designation "2004 Edition" in documentation required by this Code. If you choose not to invoke these revisions before their mandatory date, use the designation "2001 Edition through the 2003 Addenda" in documentation required by this Code.

Changes given below are identified on the pages by a margin note, **04**, placed next to the affected area.

Location	*Page*	*Change*
List of Sections	iii	Updated to reflect 04
Foreword	xi–xiii	Editorially revised
Specification Removal	xxxvii	Added
Acceptable ASTM Editions	xlv–lii	Revised in its entirety and columns for Sections VIII-3 and XII Added
SB-61	35, 36	Revised in its entirety
SB-62	37, 38	Revised in its entirety
SB-423	529	Subtitle revised
SB-462	591–597	Revised in its entirety
SB-626	853–858	Revised in its entirety

NOTE:
Volume 54 of the Interpretations to Section II, Part B of the ASME Boiler and Pressure Vessel Code follows the last page of the Edition to Section II, Part B.

SPECIFICATION FOR ALUMINUM-ALLOY SAND CASTINGS

SB-26/SB-26M

(Identical with ASTM Specification B 26/B 26M-99 except that certification has been made mandatory and ASME welding requirements are invoked.)

1. Scope

1.1 This specification covers aluminum-alloy sand castings designated as shown in Table 1.

1.2 Alloy and temper designations are in accordance with ANSI H35.1 and H35.1M. Unified Numbering System alloy designations are in accordance with Practice E 527.

1.3 Unless the order specifies the "M" specification designation, the material shall be furnished to the inch-pound units.

1.4 For acceptance criteria for inclusion of new aluminum and aluminum alloys and their properties in this specification, see Annex A1 and Annex A2.

1.5 The values stated in either inch-pound units or SI units are to be regarded separately as standards. The SI units are shown in brackets or in separate tables or columns. The values stated in each system are not exact equivalents; therefore, each system must be used independent of the other. Combining values from the two systems may result in nonconformance with the specification.

2. Referenced Documents

2.1 The following documents of the issue in effect on date of material purchase form a part of this specification to the extent referenced herein:

2.2 *ASTM Standards:*

B 179 Specification for Aluminum Alloys in Ingot Form for Castings from All Casting Processes

B 275 Practice for Codification of Certain Nonferrous Metals and Alloys, Cast and Wrought

B 557 Test Methods for Tension Testing Wrought and Cast Aluminum- and Magnesium-Alloy Products

B 557M Test Methods for Tension Testing Wrought and Cast Aluminum- and Magnesium-Alloy Products [Metric]

B 597 Practice for Heat Treatment of Aluminum Alloys

B 660 Practices for Packaging/Packing of Aluminum and Magnesium Products

E 29 Practice for Using Significant Digits in Test Data to Determine Conformance with Specifications

E 34 Test Methods for Chemical Analysis of Aluminum and Aluminum Base-Alloys

E 88 Practice for Sampling Nonferrous Metals and Alloys in Cast Form for Determination of Chemical Composition

E 94 Guide for Radiographic Testing

E 155 Reference Radiographs for Examination of Aluminum and Magnesium Castings

E 165 Test Method for Liquid Penetrant Examination

E 227 Test Method for Optical Emission Spectrometric Analysis of Aluminum and Aluminum Alloys by the Point-to-Plane Technique

E 527 Practice for Numbering Metals and Alloys (UNS)

E 607 Test Method for Optical Emission Spectrometric Analysis of Aluminum and Aluminum Alloys by the Point-to-Plane Technique, Nitrogen Atmosphere

E 716 Practices for Sampling Aluminum and Aluminum Alloys for Spectrochemical Analysis

E 1251 Test Method for Optical Emission Spectrometric Analysis of Aluminum and Aluminum Alloys by the Argon Atmosphere, Point-to-Plane, Unipolar Self Initiating Capacitor Discharge

IEEE/ASTM SI 10 Standard for Use of the International System of Units (SI): The Modern Metric System

2.3 *American National Standards:*

H35.1 Alloy and Temper Designation System for Aluminum

TABLE 1
CHEMICAL COMPOSITION LIMITS

Alloy			Composition (Values in Weight Percent)										Others[A]	
ANSI[B]	UNS	Aluminum	Silicon	Iron	Copper	Manganese	Magnesium	Chromium	Nickel	Zinc	Tin	Titanium	Each	Total[C]
201.0	A02010	remainder	0.10	0.15	4.0–5.2	0.20–0.50	0.15–0.55	...	...	...	...	0.15–0.35	0.05[D]	0.10
204.0	A02040	remainder	0.20	0.35	4.2–5.0	0.10	0.15–0.35	...	0.05	0.10	0.05	0.15–0.30	0.05[D]	0.15
208.0	A02080	remainder	2.5–3.5	1.2	3.5–4.5	0.50	0.10	...	0.35	1.0	...	0.25	...	0.50
222.0	A02220	remainder	2.0	1.5	9.2–10.7	0.50	0.15–0.35	...	0.50	0.8	...	0.25	...	0.35
242.0	A02420	remainder	0.7	1.0	3.7–4.5	0.35	1.2–1.8	0.25	1.7–2.3	0.35	...	0.25	0.05	0.15
A242.0	A12420	remainder	0.6	0.8	3.7–4.5	0.10	1.2–1.7	0.15–0.25	1.8–2.3	0.10	...	0.07–0.20	0.05	0.15
295.0	A02950	remainder	0.7–1.5	1.0	4.0–5.0	0.35	0.03	...	...	0.35	...	0.25	0.05	0.15
319.0	A03190	remainder	5.5–6.5	1.0	3.0–4.0	0.50	0.10	...	0.35	1.0	...	0.25	...	0.50
328.0	A03280	remainder	7.5–8.5	1.0	1.0–2.0	0.20–0.6	0.20–0.6	0.35	0.25	1.5	...	0.25	...	0.50
355.0	A03550	remainder	4.5–5.5	0.6[E]	1.0–1.5	0.50[E]	0.40–0.6	0.25	...	0.35	...	0.25	0.05	0.15
C355.0	A33550	remainder	4.5–5.5	0.20	1.0–1.5	0.10	0.40–0.6	...	...	0.10	...	0.20	0.05	0.15
356.0	A03560	remainder	6.5–7.5	0.6[E]	0.25	0.35[E]	0.20–0.45	...	...	0.35	...	0.25	0.05	0.15
A356.0	A13560	remainder	6.5–7.5	0.20	0.20	0.10	0.25–0.45	...	...	0.10	...	0.20	0.05	0.15
443.0	A04430	remainder	4.5–6.0	0.8	0.6	0.50	0.05	0.25	...	0.50	...	0.25	...	0.35
B443.0	A24430	remainder	4.5–6.0	0.8	0.15	0.35	0.05	...	...	0.35	...	0.25	0.05	0.15
512.0	A05120	remainder	1.4–2.2	0.6	0.35	0.8	3.5–4.5	0.25	...	0.35	...	0.25	0.05	0.15
514.0	A05140	remainder	0.35	0.50	0.15	0.35	3.5–4.5	...	...	0.15	...	0.25	0.05	0.15
520.0	A05200	remainder	0.25	0.30	0.25	0.15	9.5–10.6	...	...	0.15	...	0.25	0.05	0.15
535.0	A05350	remainder	0.15	0.15	0.05	0.10–0.25	6.2–7.5	...	...	...	...	0.10–0.25	0.05[F]	0.15
705.0	A07050	remainder	0.20	0.8	0.20	0.40–0.6	1.4–1.8	0.20–0.40	...	2.7–3.3	...	0.25	0.05	0.15
707.0	A07070	remainder	0.20	0.8	0.20	0.40–0.6	1.8–2.4	0.20–0.40	...	4.0–4.5	...	0.25	0.05	0.15
710.0[G]	A07100	remainder	0.15	0.50	0.35–0.65	0.05	0.6–0.8	...	...	6.0–7.0	...	0.25	0.05	0.15
712.0[G]	A07120	remainder	0.30	0.50	0.25	0.10	0.50–0.65	0.40–0.6	...	5.0–6.5	...	0.15–0.25	0.05	0.20
713.0	A07130	remainder	0.25	1.1	0.40–1.0	0.6	0.20–0.50	0.35	0.15	7.0–8.0	...	0.25	0.10	0.25
771.0	A07710	remainder	0.15	0.15	0.10	0.10	0.8–1.0	0.06–0.20	...	6.5–7.5	...	0.10–0.20	0.05	0.15
850.0	A08500	remainder	0.7	0.7	0.7–1.3	0.10	0.10	...	0.7–1.3	...	5.5–7.0	0.20	...	0.30
851.0[G]	A08510	remainder	2.0–3.0	0.7	0.7–1.3	0.10	0.10	...	0.30–0.7	...	5.5–7.0	0.20	...	0.30
852.0[G]	A08520	remainder	0.40	0.7	1.7–2.3	0.10	0.6–0.9	...	0.9–1.5	...	5.5–7.0	0.20	...	0.30

(continued)

TABLE 1
CHEMICAL COMPOSITION LIMITS (CONT'D)

NOTE 1 — When single units are shown, these indicate the maximum amounts permitted.

NOTE 2 — Analysis shall be made for the elements for which limits are shown in this table.

NOTE 3 — The following applies to all specified limits in this Table: For purposes of determining conformance to these limits, an observed value or a calculated value obtained from analysis shall be rounded to the nearest unit in the last right-hand place of figures used in expressing the specified limit in accordance with the rounding method of Practice E 29.

[A] "Others" includes listed elements for which no specific limits are shown as well as unlisted metallic elements. The producer may analyze samples for trace elements not specified in the specification. However, such analysis is not required and may not cover all metallic "Others" elements. Should any analysis by the producer or the purchaser establish that an "Others" element exceeds the limit of "Each" or that the aggregate of several "Others" elements exceeds the limit of "Total," the material shall be considered nonconforming.

[B] ASTM alloy designations are recorded in Practice B 275.

[C] Other Elements — Total shall be the sum of unspecified metallic elements 0.010% or more, rounded to the second decimal before determining the sum.

[D] Contains silver 0.40–1.0.

[E] If iron exceeds 0.45%, manganese content shall not be less than one half of the iron content.

[F] Contains beryllium 0.003–0.007%, boron 0.005% max.

[G] 710.0 formerly A712.0, 712.0 formerly D712.0, 851.0 formerly A850, 852.0 formerly B850.0.

H35.1M Alloy and Temper Designation System for Aluminum [Metric]

2.4 *Military Standards:*

MIL-STD-129 Marking for Shipment and Storage
MIL-STD-276 Impregnation of Porous Nonferrous Metal Castings
MIL-STD-278 Welding and Allied Processes for Machinery for Ships of the United States Navy
MIL-I-13857 Impregnation fo Metal Castings

2.5 *Federal Standard:*

FED. STD. No. 123 Marking for Shipment (Civil Agencies)

3. Terminology

3.1 *Definition:*

3.1.1 *sand casting* — a metal object produced by pouring molten metal into a sand mold and allowing it to solidify.

4. Ordering Information

4.1 Orders for castings under this specification shall include the following information (1.3 and 1.4):

4.1.1 This specification designation (which includes the number, year, and revision letter, if applicable),

NOTE 1 — For inch-pound application, specify Specification B 26, and for metric application, specify Specification B 26M. Do not mix units.

4.1.2 The quantity in either pieces or pounds [kilograms],

4.1.3 Alloy (Section 7 and Table 1),

4.1.4 Temper (Section 11 and Table 2),

4.1.5 Applicable drawing or part number,

4.2 Additionally, orders for materials to this specification shall include the following information when required by the purchaser:

4.2.1 Whether chemical analysis and tensile property reports are required (Table 1 and Table 2),

4.2.2 Whether castings or test bars, or both, may be artificially aged for Alloys 705.0-T5, 707.0-T5, 712.0-T5, and 713.0-T5 (11.2) and whether yield strength tests are required for these alloys,

4.2.3 Whether test specimens cut from castings are required in addition to or instead of separately cast specimens (Sections 11 and 14),

4.2.4 Whether repairs are permissible (17.1),

4.2.5 Whether inspection is required at the producer's works (Section 19),

4.2.6 Certification is required (22.1),

4.2.7 Whether surface requirements shall be checked against observational standards where such standards are established (20.1),

4.2.8 Whether liquid penetrant inspection is required (20.2),

4.2.9 Whether radiographic inspection is required (20.3),

4.2.10 Whether foundry control is required (Section 10),

4.2.11 Whether the material shall be packaged, or marked, or both, in accordance with Practices B 660, MIL-STD-129, and Fed. Std. No. 123 (see 24.4).

5. Quality Assurance

5.1 Unless otherwise specified in the contract or purchase order, the producer shall be responsible for the performance of all inspections and test requirements specified herein. Unless disapproved by the purchaser, the producer may use his own or any other suitable facilities for the performance of the inspection and test requirements specified herein. The purchaser shall have the right to perform any of the inspections and tests set forth in this specification where such inspections are deemed necessary to confirm that the material conforms to prescribed requirements.

6. Manufacture

6.1 The responsibility of furnishing castings that can be laid out and machined to the finished dimensions within the permissible variations specified, as shown on the blueprints or drawings, shall rest with the producer, except where pattern equipment is furnished by the purchaser.

7. Chemical Composition

7.1 The castings shall conform to the chemical composition limits prescribed in Table 1. Conformance shall be determined by the producer by analyzing samples taken at the time the castings are poured, or samples taken from castings or tension test specimens representative of castings. If the producer has determined the chemical composition of the material during the course of manufacture, he shall not be required to sample and analyze the finished product.

TABLE 2
TENSILE REQUIREMENTS[A]
(Inch-Pound Units)

Alloy						
ANSI[D]	UNS	Temper[B]	Tensile Strength, min, ksi	Yield Strength (0.2% offset, min, ksi	Elongation in 2 in. or 4 diameter, min, %	Typical Brinell Hardness,[C] 500 kgf, 10 mm
201.0	A02010	T7	60.0	50.0	3.0	...
204.0	A02040	T4	45.0	28.0	6.0	...
208.0	A02080	F	19.0	12.0	1.5	55
222.0	A02220	0[E]	23.0	[F]	[F]	80
		T61	30.0	[F]	[F]	115
242.0	A02420	0[E]	23.0	[F]	[F]	70
		T61	32.0	20.0	[F]	105
A242.0	A12420	T75	29.0	[F]	1.0	75
295.0	A02950	T4	29.0	13.0	6.0	60
		T6	32.0	20.0	3.0	75
		T62	36.0	28.0	[F]	95
		T7	29.0	16.0	3.0	70
319.0	A03190	F	23.0	13.0	1.5	70
		T5	25.0	[F]	[F]	80
		T6	31.0	20.0	1.5	80
328.0	A03280	F	25.0	14.0	1.0	60
		T6	34.0	21.0	1.0	80
355.0	A03550	T6	32.0	20.0	2.0	80
		T51	25.0	18.0	[F]	65
		T71	30.0	22.0	[F]	75
C355.0	A33550	T6	36.0	25.0	2.5	...
356.0	A03560	F	19.0	9.5	2.0	55
		T6	30.0	20.0	3.0	70
		T7	31.0	[F]	[F]	75
		T51	23.0	16.0	[F]	60
		T71	25.0	18.0	3.0	60
A356.0	A13560	T6	34.0	24.0	3.5	80
		T61	35.0	26.0	1.0	...
443.0	A04430	F	17.0	7.0	3.0	40
B443.0	A24430	F	17.0	6.0	3.0	40
512.0	A05120	F	17.0	10.0	...	50
514.0	A05140	F	22.0	9.0	6.0	50
520.0	A05200	T4	42.0	22.0	12.0	75
535.0	A05350	F	35.0	18.0	9.0	70
705.0	A07050	T5	30.0	17.0[G]	5.0	65
707.0	A07070	T7	37.0	30.0[G]	1.0	80
710.0[H]	A07100	T5	32.0	20.0	2.0	75
712.0[H]	A07120	T5	34.0	25.0[G]	4.0	75
713.0	A07130	T5	32.0	22.0	3.0	75
771.0	A07710	T5	42.0	38.0	1.5	100
		T51	32.0	27.0	3.0	85
		T52	36.0	30.0	1.5	85
		T6	42.0	35.0	5.0	90
		T71	48.0	45.0	2.0	120
850.0	A08500	T5	16.0	[F]	5.0	45
851.0[H]	A08510	T5	17.0	[F]	3.0	45
852.0[H]	A08520	T5	24.0	18.0	[F]	60

(continued)

TABLE 2
TENSILE REQUIREMENTS[A] (CONT'D)

NOTE 1 — For purposes of determining conformance with this specification, each value for tensile strength and yield strength shall be rounded to the nearest 0.1 ksi and each value for elongation shall be rounded to the nearest 0.5%, both in accordance with the rounding method of Practice E 29.

[A] If agreed upon between the manufacturer and the purchaser, other mechanical properties may be obtained by other heat treatments such as annealing, aging, or stress relieving.

[B] Temper designations:
F As fabricated.
O Annealed.
T1 Cooled from an elevated temperature shaping process and naturally aged to a substantially stable condition.
T4 Solution heat-treated and naturally aged to a substantially stable condition.
T5 Cooled from an elevated temperature shaping process and then artificially aged.
T6 Solution heat-treated and then artificially aged.
T7 Solution heat-treated and stabilized.
Additional digits, the first of which shall not be zero, may be added to designation T1 through T10 to indicate a variation in treatment that significantly alters the characteristics of the product.

[C] For information only, not required for acceptance.

[D] ASTM alloy designations are recorded in Practice B 275.

[E] Formerly designated as 222.0-T2 and 242.0-T21.

[F] Not required.

[G] Yield strength to be determined only when specified in the contract or purchase order.

[H] 710.0 formerly A712.0, 712.0 formerly D712.0, 851.0 formerly A850.0, 852.0 formerly B850.0.

8. Sampling

8.1 A sample for determination of chemical composition shall be taken to represent the following:

8.1.1 Not more than 2000 lb [917 kg] of clean castings (gates and risers removed) or a single casting poured from one furnace.

8.1.2 Castings poured continuously from one furnace for not more than eight consecutive hours.

8.2 Samples for determination of chemical composition shall be taken in accordance with one of the following methods:

8.2.1 *Samples for Chemical Analysis* — Samples for chemical analysis shall be in accordance with Practice E 88 except that the weight of a prepared sample shall be not less than 75 g.

8.2.2 *Samples for Spectrochemical and Other Methods of Analysis* — Sampling for spectrochemical analysis shall be in accordance with Practices E 716. Samples for other methods of analysis shall be suitable for the form of material being analyzed and the type of analytical methods used.

9. Material Requirements — Castings Produced for Governmental and Military Agencies

9.1 Unless otherwise specified, only aluminum alloy conforming to the requirements of Specification B 179 or producer's foundry scrap (identified as being made from alloy conforming to Specification B 179) shall be used in the remelting furnace from which molten metal is taken for pouring directly into castings. Additions of small amounts of modifiers and grain refining elements or alloys are permitted.

9.1.1 Pure materials, recycled materials, and master alloys may be used to make alloys conforming to this specification, provided chemical analysis can be taken and adjusted to conform to Table 1 prior to pouring any castings.

10. Foundry Control — Castings Produced for Governmental and/or Military Agencies

10.1 When specified, castings shall be produced under foundry control approved by the purchaser. Foundry control shall consist of examination of castings by radiographic or other approved methods for determining internal discontinuities until the gating, pouring, and other foundry practices have been established to produce castings meeting the quality standards furnished by the purchaser or agreed upon between the purchaser and the producer. When foundry practices have been so established, the production method shall not be significantly changed without demonstrating to the satisfaction of the purchaser that the change does not adversely affect the quality of the castings. Minor changes in pouring temperature of ±50°F [±28°C] from the established nominal temperature are permissible.

11. Tensile Properties

11.1 The tension test specimens representing the castings shall meet the mechanical properties prescribed in Table 2.

11.2 Although Alloys 705.0, 707.0, 712.0, and 713.0 are most frequently used in the naturally aged condition, by agreement between the producer and the purchaser, the castings may be artificially aged to the T5 temper. The producer and the purchaser may also agree to base the acceptance of castings on artificially aged test bars. The conditions of artificial aging shown in Practice B 597 shall be employed unless other conditions are accepted by mutual consent.

11.3 When specified, the average tensile strength, average yield strength, and average elongation values of specimens cut from castings shall be not less than 75% of the tensile and yield strength values and not less than 25% of the elongation values specified in Table 2 [Table 3]. The measurement of the elongation is not required for test specimens cut from castings if 25% of the specified minimum elongation value published in Table 2 [Table 3] is 0.5% or less. If grade D quality castings as described in Table 4 are specified, no tensile tests shall be specified nor tensile requirements be met on specimens cut from castings.

12. Workmanship, Finish, and Appearance

12.1 The finished castings shall be uniform in composition and free of blowholes, cracks, shrinks, and other discontinuities except as designated and agreed upon as acceptable by the purchaser.

13. Number of Tests and Retests

13.1 Unless otherwise agreed upon between the purchaser and producer, a minimum of two tension test specimens shall be separately cast and tested to represent the following:

13.1.1 Not more than 4000 lb [1814 kg] of clean castings (gates and risers removed) or a single casting poured from one furnace.

13.1.2 The castings poured continuously from one furnace in not more than eight consecutive hours.

13.2 When tensile properties from castings are to be determined, one per melt-heat combination shall be tested unless otherwise shown on the drawing or specified in the purchase order.

13.3 If any test specimen shows defective machining or flaws, it may be discarded; in which case the purchaser and the producer shall agree upon the selection of another specimen in its stead.

13.4 If the results of the tension tests do not conform to the requirements prescribed in Table 2 [Table 3], the test bars representative of the castings may be retested in accordance with the replacement tests and retest provisions of Test Methods B 557 [B 557M], and the results of retests shall conform to the requirements as to mechanical properties specified in Table 2 [Table 3].

14. Specimen Preparation

14.1 The tension test specimens shall be cast to size in sand without chills in accordance with the dimensions shown in Fig. 1 [Fig. 2]. They shall not be machined prior to test except to adapt the grip ends in such a manner as to ensure axial loading.

14.2 The recommended method for casting tension test specimens is shown in Fig. 1 [Fig. 2].

14.3 When properties of castings are to be determined, tension test specimens shall be cut from the locations designated on the drawing, unless otherwise negotiated. If no locations are designated, one or more specimens shall be taken to include locations having significant variation in casting thickness, except that specimens shall not be taken from areas directly under risers. The tension test specimens shall be the standard 0.500-in. [12.5-mm] diameter specimens shown in Fig. 8 of Test Methods B 557 and B 557M or a round specimen of smaller size proportional to the standard specimen. In no case shall the dimensions of the smallest specimen be less than the following:

	in.	mm
Diameter of reduced section	0.250	6.00
Length of reduced section	1¼	36
Gage length	1.000	30.00
Radius of fillet	3/16	6
Diameter of end section	⅜	9
Overall length:		
With shouldered ends	2⅜	60
With threaded ends	3	75
With plain cylindrical ends	4	100

When necessary, a rectangular specimen may be used proportional to that shown for the 0.500-in. [12.5-mm] wide specimen in Fig. 6 of Method B 557 and B 557M, but in no case shall its dimensions be less than the following:

	in.	mm
Width of reduced section	¼	6.00
Length of reduced section	1¼	32
Radius of fillet	¼	6
Overall length	4	100
Thickness	0.100	2.50

The specific elongation values shall not apply to tests of rectangular specimens.

TABLE 3
TENSILE REQUIREMENTS[A]
(SI Units)

Alloy			Tensile Strength, min, MPa[C]	Yield Strength (0.2% offset), min, MPa[C]	Elongation in 5 × diameter, min, %	Typical Brinell Hardness,[D] 500 kgf, 10 mm
ANSI[E]	UNS	Temper[B]				
201.0	A02010	T7	415	345	3.0	...
204.0	A02040	T4	310	195	6.0	...
208.0	A02080	F	130	85	1.5	55
222.0	A02220	O[F]	160	[G]	[G]	80
		T61	205	[G]	[G]	115
242.0	A02420	O[F]	160	[G]	[G]	70
		T61	220	140	[G]	105
A242.0	A12420	T75	200	[G]	1.0	75
295.0	A02950	T4	200	90	6.0	60
		T6	220	140	3.0	75
		T62	250	195	[G]	95
		T7	200	110	3.0	70
319.0	A03190	F	160	90	1.5	70
		T5	170	[G]	[G]	80
		T6	215	140	1.5	80
328.0	A03280	F	170	95	1.0	60
		T6	235	145	1.0	80
355.0	A03550	T6	220	140	2.0	80
		T51	170	125	[G]	65
		T71	205	150	[G]	75
C355.0	A33550	T6	250	170	2.5	...
356.0	A03560	F	130	65	2.0	55
		T6	205	140	3.0	70
		T7	215	[G]	[G]	75
		T51	160	110	[G]	60
		T71	170	125	3.0	60
A356.0	A13560	T6	235	165	3.5	80
		T61	245	180	1.0	...
443.0	A04430	F	115	50	3.0	40
B443.0	A24430	F	115	40	3.0	40
512.0	A05120	F	115	70	...	50
514.0	A05140	F	150	60	6.0	50
520.0	A05200	T4	290	150	12.0	75
535.0	A05350	F	240	125	9.0	70
705.0	A07050	T5	205	115[H]	5.0	65
707.0	A07070	T7	255	205[H]	1.0	80
710.0[I]	A07100	T5	220	140	2.0	75
712.0[I]	A07120	T5	235	170[H]	4.0	75
713.0	A07130	T5	220	150	3.0	75
771.0	A07710	T5	290	260	1.5	100
		T51	220	185	3.0	85
		T52	250	205	1.5	85
		T6	290	240	5.0	90
		T71	330	310	2.0	120
850.0	A08500	T5	110	[G]	5.0	45
851.0[I]	A08510	T5	115	[G]	3.0	45
852.0[I]	A08520	T5	165	125	[G]	60

(continued)

TABLE 3
TENSILE REQUIREMENTS[A] (CONT'D)

NOTE 1 — For purposes of determining conformance with this specification, each value for tensile strength and yield strength shall be rounded to the nearest 1 MPa and each value for elongation shall be rounded to the nearest 0.5%, both in accordance with the rounding method of Practice E 29.

[A] If agreed upon between the manufacturer and the purchaser, other mechanical properties may be obtained by other heat treatments such as annealing, aging, or stress relieving.

[B] Temper designations:

F As fabricated.

O Annealed

T1 Cooled from an elevated temperature shaping process and naturally aged to a substantially stable condition.

T4 Solution heat-treated and naturally aged to a substantially stable condition.

T5 Cooled from an elevated temperature shaping process and then artificially aged.

T6 Solution heat-treated and then artificially aged.

T7 Solution heat-treated and stabilized.

Additional digits, the first of which shall not be zero, may be added to designation T1 through T10 to indicate a variation in treatment that significantly alters the characteristics of the product.

[C] For explanation of the SI unit "MPa," see Appendix X2.

[D] For information only, not required for acceptance.

[E] ASTM alloy designations are recorded in Practice B 275.

[F] Formerly designated as 222.0-T2 and 242.0-T21.

[G] Not required.

[H] Yield strength to be determined only when specified in the contract or purchase order.

[I] 710.0 formerly A712.0, 712.0 formerly D712.0, 851.0 formerly A850.0, 852.0 formerly B850.0.

14.4 If the castings are to be heat treated and separately cast specimens are to be used, the specimens representing such castings shall be heat treated with the castings they represent. If castings are to be heat treated and tests are to be obtained on the castings, the test specimens shall be taken from the castings after heat treatment.

15. Test Methods

15.1 The determination of chemical composition shall be made in accordance with suitable chemical (Test Methods E 34), or spectrochemical (Test Methods E 227, E 607, and E 1251), methods. Other methods may be used only when no published ASTM method is available. In case of dispute, the methods of analysis shall be agreed upon between the producer and purchaser.

15.2 The tensile properties shall be determined in accordance with Test Methods B 557 and B 557M.

16. Heat Treatment

16.1 When castings are to be heat treated, the practices shall be in accordance with Practice B 597. Heat treatment shall be performed on the whole castings and never on a portion.

17 Repair of Castings

17.1 Castings may be repaired only by processes approved and agreed upon between the producer and purchaser, that is, welding, impregnation, peening, blending, soldering, etc. Limitations on the extent and frequency of such repairs, and methods of inspection of repaired areas should also be agreed upon.

17.2 The welding procedure and welders shall be qualified in accordance with Section IX of the ASME Code.

18. Repairing of Castings — Produced for Governmental and Military Agencies

18.1 *Welding:*

18.1.1 When welding is permitted, it shall be done by methods suitable for the particular alloy. Welding methods shall be in accordance with such specifications as are referenced on the applicable drawings, or as are required by the contract or order.

18.1.2 All welding shall be done by qualified welders approved by the purchaser.

18.1.3 When castings are to be supplied in the heat-treated condition, they shall be heat treated to the required temper after welding, except that small arc welds may be performed without subsequent heat treatment upon approval of the purchaser.

18.1.4 Unless otherwise specified, castings that have been repaired by welding shall have the welded areas examined radiographically after all reworking and heat treatment have been completed.

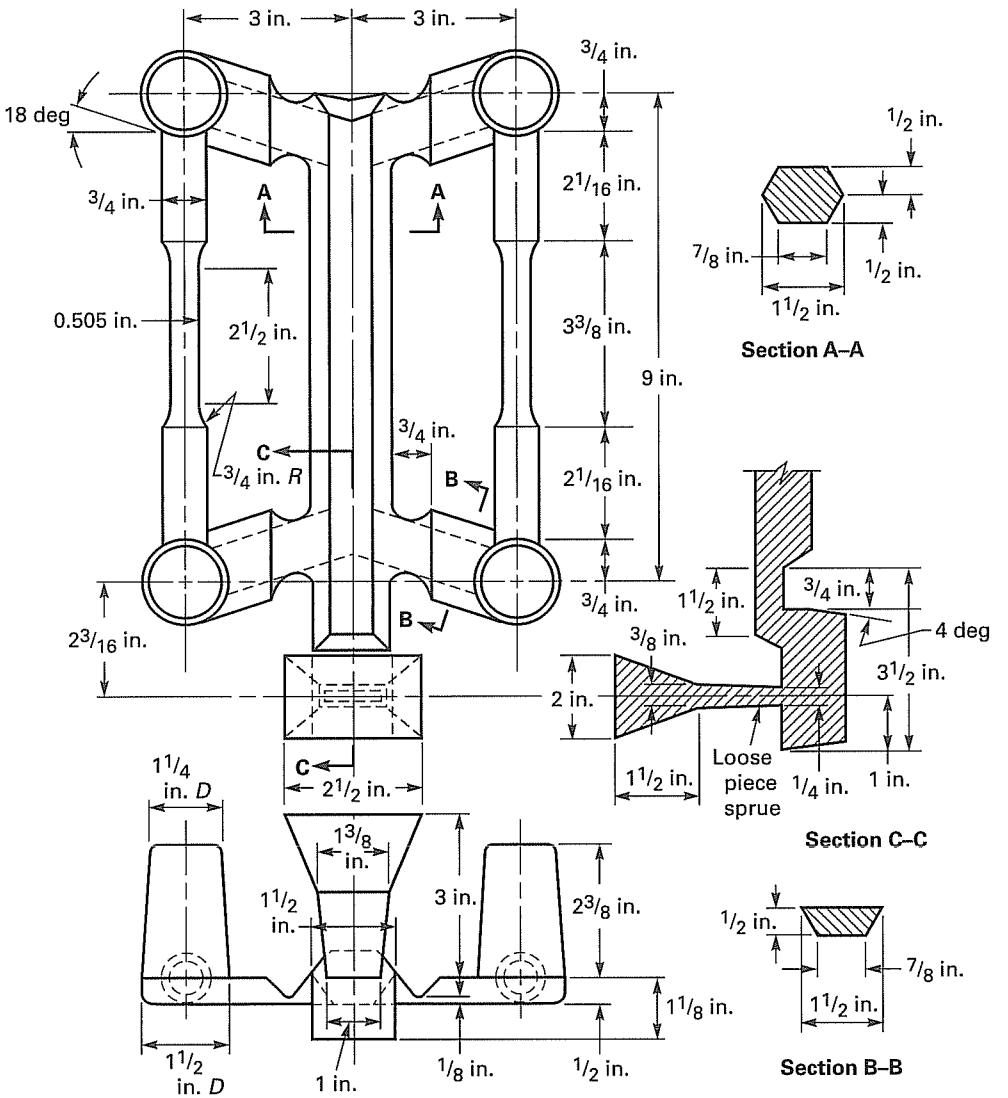

NOTE: 1 in. = 25.4 mm.

FIG. 1 TENSION TEST SPECIMEN CASTING

18.1.5 All welds shall be free of cracks, excess gas, porosity, lack of fusion, and meet the same quality requirements as the parent material.

18.1.6 Welded castings shall be marked with a symbol of three concentric circles with a letter or number designating the welder adjacent to the symbol. The outer circle of the symbol shall be not larger than ¼ in. [6 mm] in outside diameter. All welded areas shall be encircled with a ring of white paint prior to submission for final inspection.

18.1.7 *Naval Shipboard Applications* — Repair welding of castings used in Naval shipboard pressure vessels, piping systems, and machinery shall be performed in accordance with requirements for repair of castings specified in MIL-STD-278.

18.2 *Impregnation* — When impregnation is permitted, it shall be to correct general seepage leaks only and shall not be used to correct poor foundry technique or significant porosity. It shall be accomplished in accordance with MIL-STD-276 or, when specified, MIL-I-13857. Unless otherwise authorized by the purchaser, castings that have been impregnated shall be marked "IMP."

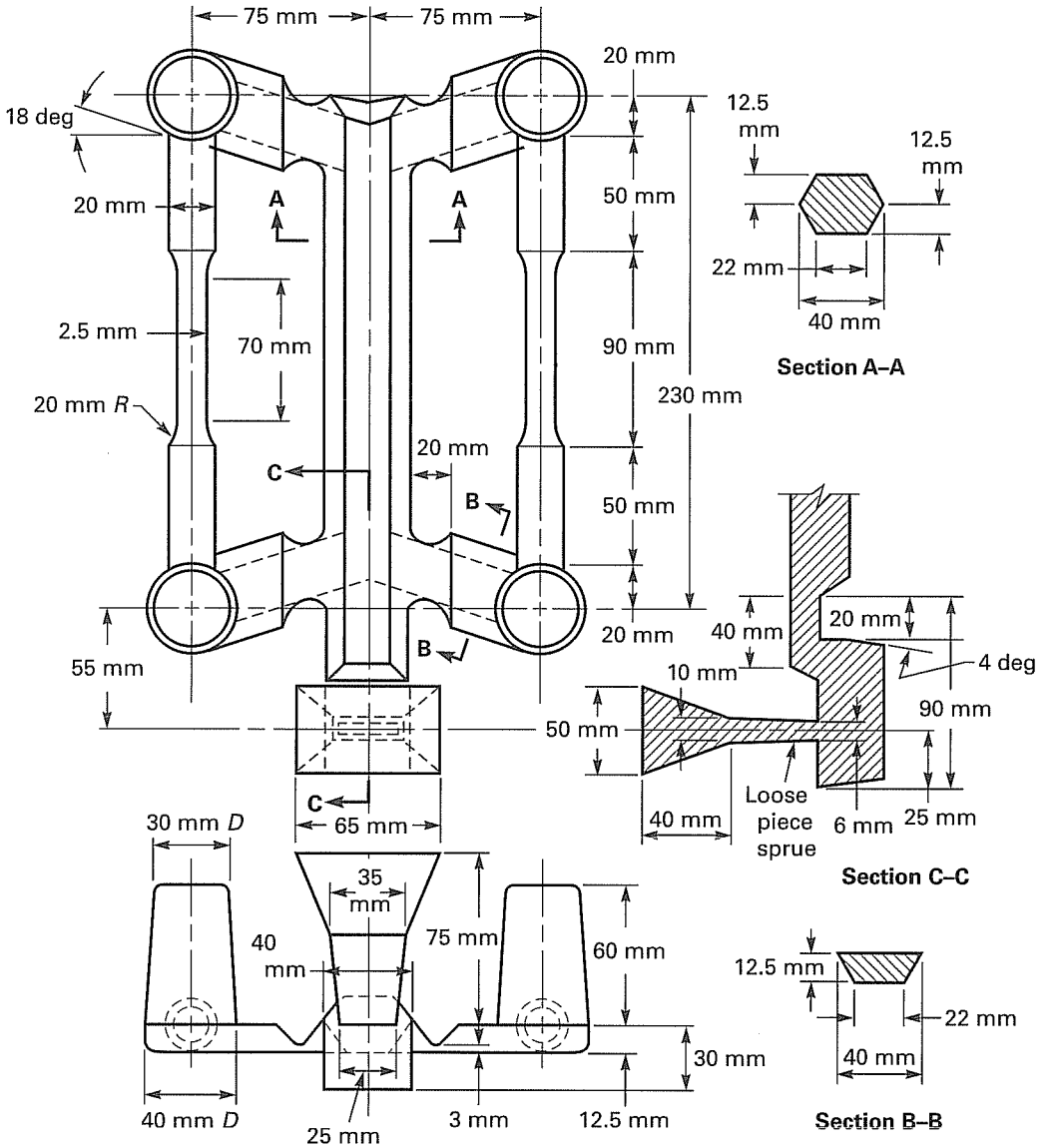

FIG. 2 TENSION TEST SPECIMEN CASTING (METRIC)

18.3 *Peening* — When peening is permitted, it shall be to correct localized minor seepage leaks and small surface imperfections only, or to disclose subsurface voids for purpose of inspection. Peening will not be permitted to repair cracks, cold shuts, shrinks, misruns, defects due to careless handling, or other similar major defects. Peening may be accomplished either hot or cold and shall be performed by methods that are acceptable to the purchaser. Peened castings shall be marked with Maltese cross approximately ¼ in. [6 mm] high.

18.4 *Blending* — Blending with suitable grinders or other tools will be permitted for the removal of surface imperfections only, and shall not result in dimensions outside the tolerances shown on the applicable drawing.

19. Source Inspection

19.1 If the purchaser elects to make an inspection of the casting at the producer's works, it shall be so stated in the contract or order.

19.2 If the purchaser elects to have inspection made at the producer's works, the producer shall afford the inspector all reasonable facilities to satisfy him that the

TABLE 4
DISCONTINUITY-LEVEL REQUIREMENTS FOR ALUMINUM SAND CASTINGS
(Reference Radiographs E 155)

Discontinuity	Radiograph	Section Thickness, in. [mm]							
		Grade A[A]	Grade B		Grade C		Grade D	
		1/4 [6.4]	3/4 [19.0]	1/4 [6.4]	3/4 [19.0]	1/4 [6.4]	3/4 [19.0]	1/4 [6.4]	3/4 [19.0]
Gas holes	1.1	none	1	1	2	2	5	5
Gas porosity (round)	1.21	none	1	1	3	3	7	7
Gas porosity (elongated)	1.22	none	1	1	3	4	5	5
Shrinkage cavity	2.1	none	1	[B]	2	[B]	3	[B]
Shrinkage porosity or sponge	2.2	none	1	1	2	2	4	3
Foreign material (less dense material)	3.11	none	1	1	2	2	4	4
Foreign material (more dense material)	3.12	none	1	1	2	1	4	3
Segregation	3.2	none	none		none		none	
Cracks	...	none	none		none		none	
Cold shuts	...	none	none		none		none	
Surface irregularity	...	...	not to exceed drawing tolerance					
Core shift	...	...	not to exceed drawing tolerance					

A Caution should be exercised in requesting Grade A.
B Not available.

material is being furnished in accordance with this specification. All tests and inspection shall be so conducted as not to interfere unnecessarily with the operation of the works.

20. Foundry Inspection

20.1 Requirements such as surface finish, parting line projections, snagging projections where gates and risers were removed, etc., may be checked visually. It is advisable to have agreed-upon observational standards representing both acceptable and unacceptable material.

20.2 *Liquid Penetrant Inspection:*

20.2.1 When specified, liquid penetrant inspection shall be in accordance with Test Method E 165, and the required sensitivity shall be specified.

20.2.2 Acceptance standards for discontinuities shall be agreed upon, including size and frequency per unit area and location.

20.3 *Radiographic Inspection:*

20.3.1 When specified, radiographic inspection shall be in accordance with Guide E 94 and Reference Radiographs E 155.

20.3.2 Radiographic acceptance shall be in accordance with requirements selected from Table 4. Any modifications of this table and the frequency per unit area and location should also be agreed upon.

20.3.3 The number, film size, and orientation of radiographs and the number of castings radiographically inspected shall be agreed upon between the manufacturer and purchaser.

21. Rejection and Rehearing

21.1 Castings that show unacceptable defects revealed by operations subsequent to acceptance and within an agreed time may be rejected, and shall be replaced by the producer.

21.2 In the case of dissatisfaction regarding rejections based on chemical compostion and mechanical properties specified in Sections 7 and 11, respectively, the producer may make claim for rehearing as the basis of arbitration within a reasonable time after receipt by the producer of the rejection notification.

22. Certification

22.1 The producer shall furnish to the purchaser a certificate stating that each lot has been sampled, tested, and inspected in accordance with this specification, and has met the requirements.

23. Identification and Repair Markings — Castings Produced for Government and Military Agencies

23.1 *Identification* — Unless otherwise specified, each casting shall be marked with the applicable drawing or part number. The marking shall consist of raised Arabic

numerals, and when applicable, capital letters, cast integral. The location of the identification marking shall be as specified on the applicable drawing. When the location is not specified on the drawing, the drawing/part number shall be placed in a location mutually agreeable to the purchaser and producer.

23.1.1 *Lot Identification* — When practicable, each casting shall also be marked with the melt of inspection lot number.

23.2 *Lot* — A lot shall consist of all of the cleaned castings poured from the same heat or melt when subsequent heat treatment is not required.

23.2.1 When the castings consist of alloys that require heat treatment, the lot shall consist of all castings from the same melt or heat that have been heat treated in the same furnace charge, or if heat treated in a continuous furnace, all castings from the same melt or heat that are discharged from the furnace during a 4-h period.

23.3 *Repair Markings* — All identification markings indicating repairs as specified in 18.1.6, 18.2, and 18.3, shall be made with a waterproof marking fluid.

24. Packaging, Marking, and Shipping

24.1 The material shall be packaged in such a manner as to prevent damage in ordinary handling and transportation. The type of packaging and gross weight of individual containers shall be left to the discretion of the producer unless otherwise agreed upon. Packaging methods and containers shall be so selected as to permit maximum utility of mechanical equipment in unloading and subsequent handling. Each package or container shall contain only one size, alloy, and temper of material when packaged for shipment unless otherwise agreed upon.

24.2 Each package or container shall be marked with the purchase order number, drawing number, quantity, specification number, alloy and temper, gross and net weights, and the name of the producer.

24.3 Packages or containers shall be such as to ensure acceptance by common or other carriers for safe transportation at the lowest rate to the point of delivery.

24.4 When specified in the contract and purchase order, material shall be preserved, packaged, and packed in accordance with the requirements of Practices B 660. The applicable levels shall be specified in the contract or order. Marking for shipment of such material shall be in accordance with Fed. Std. No. 123 for civil agencies and MIL-STD-129 for military agencies.

25. Keywords

25.1 aluminum; sand casting

ANNEXES

(Mandatory Information)

A1. BASIS FOR INCLUSION OF PROPERTY LIMITS

A1.1 Limits are established at a level at which a statistical evaluation of the data indicates that 99% of the population obtained from all standard material meets the limit with 95% confidence. For the products described, mechanical property limits for the respective size ranges are based on the analyses of at least 100 data from standard production material with no more than ten data from a given lot. All tests are performed in accordance with the appropriate ASTM test methods. For informational purposes, refer to "Statistical Aspects of Mechanical Property Assurance" in the Related Material section of the *Annual Book of ASTM Standards,* Vol. 02.02.

A2. ACCEPTANCE CRITERIA FOR INCLUSION OF NEW ALUMINUM AND ALUMINUM ALLOYS IN THIS SPECIFICATION

A2.1 Prior to acceptance for inclusion in this specification, the composition of wrought or cast aluminum or aluminum alloy shall be registered in accordance with ANSI H35.1 or H35.1(M). The Aluminum Association holds the Secretariat of ANSI H35 Committee and administers the criteria and procedures for registration.

A2.2 If it is documented that the Aluminum Association could not or would not register a given composition, an alternative procedure and the criteria for acceptance shall be as follows:

A2.2.1 The designation submitted for inclusion does not utilize the same designation system as described in ANSI H35.1 or H35.1(M). A designation not in conflict with other designation systems or a trade name is acceptable.

A2.2.2 The aluminum or aluminum alloy has been offered for sale in commercial quantities within the prior twelve months to at least three identifiable users.

A2.2.3 The complete chemical composition limits are submitted.

A2.2.4 The composition is, in the judgement of the responsible subcommittee, significantly different from that of any other aluminum or aluminum alloy already in the specification.

A2.2.5 For codification purposes, an alloying element is any element intentionally added for any purpose other than grain refinement and for which minimum and maximum limits are specified. Unalloyed aluminum contains a minimum of 99.00% aluminum.

A2.2.6 Standard limits for alloying elements and impurities are expressed to the following decimal places:

Less than 0.001%	0.000X
0.001 to but less than 0.01%	0.00X
0.01 to but less than 0.10%	
Unalloyed aluminum made by a refining process	0.0XX
Alloys and unalloyed aluminum not made by a refining process	0.0X
0.10 through 0.55%	0.XX
(It is customary to express limits of 0.30 through 0.55% as 0.X0 or 0.X5.)	
Over 0.55%	0.X, X.X, etc.
(except that combined Si+Fe limits for 99.00% minimum aluminum must be expressed as 0.XX or 1.XX)	

A2.2.7 Standard limits for alloying elements and impurities are expressed in the following sequence: Silicon; Iron; Copper; Manganese; Magnesium; Chromium; Nickel; Zinc (Note A2.1); Titanium; Other Elements, Each; Other Elements, Total; Aluminum (Note A2.2).

NOTE A2.1 — Additional specified elements having limits are inserted in alphabetical order of their chemical symbols between zinc and titanium, or are specified in footnotes.

NOTE A2.2 — Aluminum is specified as *minimum* for unalloyed aluminum and as a *remainder* for aluminum alloys.

APPENDICES

(Nonmandatory Information)

X1. ALLOY PROPERTIES AND CHARACTERISTICS

X1.1 The data in Table X1.1 are approximate and are supplied for general information only.

X2. SI UNITS

X2.1 The SI unit for strength properties now shown is in accordance with the International System of Units (SI) (IEEE/ASTM SI 10). The derived SI unit for force is the newton (N), which is defined as that force which when applied to a body having a mass of one kilogram gives it an acceleration of one meter per second squared ($N = kg \cdot m/s^2$). The derived SI unit for pressure or stress is the newton per square meter (N/m^2), which has been named the pascal (Pa) by the General Conference on Weights and Measures. Since 1 ksi = 6 894 757 Pa, the metric equivalents are expressed as megapascal (MPa), which is the same as MN/m^2 and N/mm^2.

TABLE X1.1
PROPERTIES AND CHARACTERISTICS

Alloy		Pattern Shrinkage Allowance,[A] in./ft [mm/m]	Approximate Melting Range,[B] °F [°C]	Resistance to Hot Cracking[C]	Pressure Tightness	Fluidity[D]	Solidification Shrinkage Tendency[E]	Normally Heat Treated	Resistance to Corrosion[F]	Machining[G]	Polishing[H]	Electroplating[I]	Anodizing (Appearance)[J]	Chemical Oxide Coating (Protection)[K]	Strength at Elevated Temperature[L]	Suitability for Welding[M]	Suitability for Brazing[N]
ANSI[O]	UNS																
201.0	A02010	5/32 [13]	1060–1200 [571–649]	4	3	3	4	yes	4	1	1	1	2	2	1	4	no
204.0	A02040	5/32 [13]	985–1200 [529–649]	4	3	3	4	yes	4	1	2	1	3	4	1	4	no
208.0	A02080	5/32 [13]	970–1160 [521–627]	2	2	2	2	yes	4	3	3	2	3	3	3	2	no
222.0	A02220	5/32 [13]	965–1155 [518–624]	3	3	3	3	yes	4	1	2	1	3	4	1	4	no
242.0	A02420	5/32 [13]	990–1175 [532–635]	4	3	3	4	yes	4	2	2	1	3	4	1	4	no
295.0	A02950	5/32 [13]	970–1190 [521–643]	4	4	3	3	yes	3	2	2	1	2	3	3	3	no
319.0	A03190	5/32 [13]	950–1125 [510–607]	2	2	2	2	yes	3	3	4	2	4	3	3	2	no
328.0	A03280	5/32 [13]	960–1135 [516–613]	1	1	1	1	yes	3	4	5	2	4	2	2	2	no
355.0	A03550	5/32 [13]	1015–1150 [546–621]	1	1	1	1	yes	3	3	3	1	4	2	2	2	no
C355.0	A33550	5/32 [13]	1015–1150 [546–621]	1	1	1	1	yes	3	3	3	1	4	2	2	2	no
356.0	A03560	5/32 [13]	1035–1135 [557–613]	1	1	1	1	yes	2	4	5	2	4	2	3	2	no
A356.0	A13560	5/32 [13]	1035–1135 [557–613]	1	1	1	1	yes	2	4	5	2	4	2	3	2	no
443.0	A04430	5/32 [13]	1065–1170 [574–632]	1	1	1	1	no	3	5	5	2	5	2	4	1	ltd
B443.0	A24430	5/32 [13]	1065–1170 [574–632]	1	1	1	1	no	2	5	5	2	5	2	4	1	ltd
514.0	A05140	5/32 [13]	1110–1185 [599–640]	4	5	5	5	no	1	1	1	5	1	1	2	4	no
520.0	A05200	1/10 [8]	840–1120 [449–604]	2	5	4	5	yes	1	1	1	4	1	1	[P]	5	no
535.0	A05350	5/32 [13]	1020–1165 [549–629]	3	5	5	5	no	1	1	1	5	1	1	3	4	no
705.0	A07050	3/16 [16]	1105–1180 [596–638]	5	3	4	4	aged only	2	1	1	3	2	2	5	4	yes
707.0	A07070	3/16 [16]	1085–1165 [585–629]	5	3	4	4	yes	2	1	1	3	2	2	5	4	yes
710.0[Q]	A07100	3/16 [16]	1105–1195 [596–646]	5	3	4	4	aged only	2	1	1	2	2	3	5	4	yes
712.0[Q]	A07120	3/16 [16]	1110–1185 [599–641]	5	3	4	4	aged only	2	1	1	2	2	3	5	4	yes
713.0	A07130	3/16 [16]	1100–1185 [593–641]	5	3	4	4	aged only	2	1	1	2	2	3	5	4	yes
771.0	A07710	3/16 [16]	1120–1190 [604–643]	5	3	4	4	yes	2	1	1	3	2	2	5	4	yes
850.0	A08500	5/32 [13]	435–1200 [224–649]	5	5	5	5	aged only	3	1	1	5	4	5	[P]	5	no
851.0[Q]	A08510	5/32 [13]	440–1165 [227–629]	4	4	5	4	aged only	3	1	1	5	4	5	[P]	5	no
852.0[Q]	A08520	5/32 [13]	400–1175 [204–635]	5	5	5	5	aged only	3	1	1	5	4	5	[P]	5	no

(continued)

TABLE X1.1
PROPERTIES AND CHARACTERISTICS (CONT'D)

NOTE 1 — 1 indicates best of group, 5 indicates poorest of group.

[A] Allowances for average castings. Shrinkage requirements will vary with intricacy of design and dimensions.
[B] Temperatures of solids and liquids are indicated; pouring temperatures will be higher.
[C] Ability of alloy to withstand contraction stresses while cooling through hot-short or brittle-temperature range.
[D] Ability of liquid alloy to flow readily in mold and fill thin sections.
[E] Decreased in volume accompanying freezing of alloy and measure of amount of compensating feed metal required in form of risers.
[F] Based on alloy resistance in standard-type salt-spray test.
[G] Composite rating based on ease of cutting, chip characteristics, quality of finish, and tool life. Ratings, in the case of heat-treatable alloys, based on a -T6 temper. Other tempers, particularly the annealed temper, may have lower rating.
[H] Composite rating based on ease and speed of polishing and quality of finish provided by typical polishing procedure.
[I] Ability of casting to take and hold an electroplate applied by present standard methods.
[J] Rated on lightness of color, brightness, and uniformity of clear anodized coating applied in sulfuric acid electrolyte.
[K] Rated on combined resistance of coating and base alloy to corrosion.
[L] Rating based on tensile and yield strengths at temperatures up to 500°F [260°C], after prolonged heating at testing temperature.
[M] Based on ability of material to be fusion welded with filler rod of same alloy.
[N] Refers to suitability of alloy to withstand brazing temperatures without excessive distortion or melting.
[O] ASTM alloy designations are recorded in Practice B 275.
[P] Not recommended for service at elevated temperatures.
[Q] 710.0 formerly A712.0, 712.0 formerly D712.0, 851.0 formerly A850.0, 852.0 formerly B850.0.

SPECIFICATION FOR SEAMLESS COPPER PIPE, STANDARD SIZES

SB-42

(Identical with ASTM Specification B 42-96 for the alloys covered except for the deletion of paras. 4.1.6 and 4.2 and Supplementary Requirements for government procurement. Certification has been made mandatory.)

1. Scope

1.1 This specification covers seamless copper pipe in all nominal or standard pipe sizes, both regular and extra-strong, suitable for use in plumbing, boiler feed lines, and for similar purposes.

1.2 The values stated in inch–pound units are to be regarded as the standard. The values given in parentheses are provided for information purposes only.

2. Referenced Documents

2.1 The following documents of the issue in effect on date of material purchase form a part of this specification to the extent referenced herein:

2.2 *ASTM Standards:*

B 153 Test Method for Expansion (Pin Test) of Copper and Copper-Alloy Pipe and Tubing

B 170 Specification for Oxygen-Free Electrolytic Copper Refinery Shapes

B 601 Practice for Temper Designations for Copper and Copper Alloys—Wrought and Cast

E 8 Test Methods for Tension Testing of Metallic Materials

E 29 Practice for Using Significant Digits in Test Data to Determine Conformance with Specifications

E 53 Test Methods for Chemical Analysis of Copper

E 55 Practice for Sampling Wrought Nonferrous Metals and Alloys for Determination of Chemical Composition

E 62 Test Methods for Chemical Analysis of Copper and Copper Alloys (Photometric Methods)

E 243 Practice for Electromagnetic (Eddy-Current) Examination of Copper and Copper-Alloy Tubes

E 478 Test Methods for Chemical Analysis of Copper Alloys

E 527 Practice for Numbering Metals and Alloys (UNS)

3. Terminology

3.1 *Definitions:*

3.1.1 *lengths* — straight pieces of the product.

3.1.1.1 *standard* — uniform lengths recommended in a Simplified Practice Recommendation or established as a Commercial Standard.

3.1.2 *tube, seamless* — a tube produced with a continuous periphery in all stages of the operations.

3.1.2.1 *pipe* — a seamless tube conforming to the particular dimensions commercially known as Nominal or Standard Pipe Sizes.

3.2 *Definition of Term Specific to This Standard:*

3.2.1 *capable of* — as used in this specification, the test need not be performed by the producer of the material. However, should subsequent testing by the purchaser establish that the material does not meet these requirements the material shall be subject to rejection.

4. Ordering Information

4.1 Orders for material under this specification shall include the following information:

4.1.1 Type of copper, if required,

4.1.2 Temper (see 6.1),

4.1.3 Pipe size, regular or extra-strong, (see 10.2),

4.1.4 Length (see 10.3),

4.1.5 Total length of each size,

TABLE 1
CHEMICAL REQUIREMENTS

Copper UNS No.	Copper (incl Silver), min, %	Phosphorus, %
C10200[A]	99.95	...
C12000	99.90	0.004 to 0.012
C12200	99.9	0.015 to 0.040

[A] Oxygen in C10200 shall be 10 ppm max.

4.1.6 DELETED

4.1.7 Certification is required (see 18.1),

4.1.8 Mill test report, if required (see 20.1),

4.1.9 Hydrostatic test, if required, and

4.1.10 Pneumatic test, if required.

5. Chemical Composition

5.1 The material shall conform to the following chemical requirements:

Copper (incl silver), min, %	99.9
Phosphorus, max, %	0.04

5.2 The pipe shall be produced from one of the following coppers, and unless otherwise specified, anyone of them is permitted to be furnished:

Copper UNS No.	Previously Used Designation	Type of Copper
C10200	OF	Oxygen-free without residual deoxidants
C12000	DLP	Phosphorized, low residual phosphorus
C12200	DHP	Phosphorized, high residual phosphorus

5.3 When the copper is specified, the material shall conform to the chemical requirements specified in Table 1.

5.4 These specification limits do not preclude the possible presence of other elements. When required, limits for unnamed elements are to be established by agreement between manufacturer or supplier and purchaser.

5.4.1 The major element that is not analyzed shall be determined by difference between the sum of those elements analyzed and 100%. By agreement between manufacturer and purchaser, it is permitted to establish limits and required analysis for elements not specified.

TABLE 2
TENSILE REQUIREMENTS

Temper Designation		Pipe Size Nominal or Standard, in.	Tensile Strength, min, ksi[A] (MPa)[B]	Yield Strength,[C] min, ksi[A] (MPa)[B]
Standard	Former			
O61	annealed	All	30 (294)	9 (88)[D]
H80	hard drawn	1/8–2, incl	45 (310)	40 (280)
H55	light drawn	2–12, incl	36 (250)	30 (210)

[A] ksi = 1000 psi.
[B] See Appendix X1.
[C] At 0.5% extension under load.
[D] Light straightening operation is permitted.

6. Temper

6.1 All pipe shall normally be furnished in the O61 (annealed), H55 (light drawn), or H80 (hard drawn) temper, as prescribed in Practice B 601, and shall have the properties shown in Table 2.

6.2 When pipe is required for bending, it shall be so specified in the purchase order, and the pipe shall be furnished in the temper agreed upon between the manufacturer or supplier and the purchaser.

7. Expansion Test

7.1 Pipe ordered in the annealed (O) condition, selected for test, shall withstand an expansion of 25% of the outside diameter when expanded in accordance with Test Method B 153. The expanded pipe shall show no cracking or rupture visible to the unaided eye. Pipe ordered in the drawn (H) condition is not subject to this test.

NOTE 1 — The term "unaided eye," as used herein, permits the use of corrective spectacles necessary to attain normal vision.

7.2 As an alternative to expansion test for pipe over 4 in. (102 mm) in diameter in the annealed condition, a section 4 in. in length shall be cut from the end of one of the lengths for a flattening test. This 4-in. specimen shall be flattened so that a gage set at three times the wall thickness will pass over the pipe freely thoughout the flattened part. The pipe so tested shall develop no cracks or flaws visible to the unaided eye (Note 1) as a result of this test. In making the flattening test the elements shall be slowly flattened by one stroke of the press.

8. Microscopical Examination

8.1 The pipe shall be made from copper that is free of cuprous oxide as determined by microscopical examination at a 75X magnification. When Copper UNS No.

C12200 is supplied, microscopical examination for cuprous oxide is not required.

9. Nondestructive Testing

9.1 The material shall be tested in the final size but is permitted to be tested prior to the final anneal or heat treatment, when these thermal treatments are required, unless otherwise agreed upon by the manufacturer or supplier and purchaser.

9.2 *Eddy-Current Test* — Each piece of material from 1/8 in. (3.18 mm) up to and including 2 1/2 in. (63.5 mm) nominal outside diameter, or within the capabilities of the eddy-current tester, shall be subjected to an eddy-current test. Testing shall follow the procedures of Practice E 243, except for determination of "end effect." The material shall be passed through an eddy-current testing unit adjusted to provide information on the suitability of the material for the intended application.

9.2.1 Notch-depth standards rounded to the nearest 0.001 in. (0.025 mm) shall be 10% of the nominal wall thickness. The notch depth tolerance shall be ±0.0005 in. (0.013 mm). Alternatively, when a manufacturer uses speed insensitive equipment that allows the selection of a maximum imbalance signal, a maximum imbalance signal of 0.3% is permitted to be used.

9.2.2 Material that does not actuate the signaling device of the eddy-current test shall be considered as conforming to the requirements of this test. Material with discontinuities indicated by the testing unit is permitted to be reexamined or retested, at the option of the manufacturer, to determine whether the discontinuity is cause for rejection. Signals that are found to have been caused by minor mechanical damage, soil or moisture shall not be cause for rejection of the material provided the dimensions of the material are still within prescribed limits and the material is suitable for its intended application.

9.3 *Hydrostatic Test* — When specified, the material shall stand, without showing evidence of leakage, an internal hydrostatic pressure sufficient to subject the material to a fiber stress of 6000 psi (41 MPa), determined by the following equation for thin hollow cylinders under tension. The material need not be tested at a hydrostatic pressure of over 1000 psi (6.9 MPa) unless so specified.

$$P = 2St/(D - 0.8t)$$

where:

P = hydrostatic pressure, psi (or MPa),
t = wall thickness of the material, in. (or mm),
D = outside diameter of the material in. (or mm), and
S = allowable stress of the material, psi (or MPa).

9.4 *Pneumatic Test* — When specified, the material shall be subjected to an internal air pressure of 60 psi (415 kPa) minimum for a 5 s without showing evidence of leakage. The test method used shall permit easy visual detection of any leakage, such as by having the material under water or by the pressure-differential method. Any evidence of leakage shall be cause for rejection.

10. Dimensions and Permissible Variations

10.1 For the purpose of determining conformance with the dimensional requirements prescribed in this specification, any measured value outside the limiting values for any dimensions shall be sufficient cause for rejection.

10.2 *Standard Dimensions, Wall Thickness, and Diameter Tolerances* — The standard dimensions, wall thickness, and diameter tolerances shall be in accordance with Table 3.

10.3 *Length and Length Tolerances* — The standard length of copper pipe is 12 ft (3.66 m) with a tolerance of ±1/2 in. (13 mm).

10.4 *Roundness:*

10.4.1 For drawn unannealed pipe in straight lengths, the roundness tolerances shall be as follows:

t/d (ratio of Wall Thickness to Outside Diameter)	Roundness Tolerances as Percent of Outside Diameter [Expressed to the Nearest 0.001 in. (0.025 mm)]
0.01 to 0.03, incl	1.5
Over 0.03 to 0.05, incl	1.0
Over 0.05 to 0.10, incl	0.8
Over 0.10	0.7

10.4.2 Compliance with the roundness tolerance shall be determined by taking measurements on the outside diameter only, irrespective of the manner in which the pipe dimensions are specified.

10.4.3 The deviation from roundness is measured as the difference between major and minor diameters as determined at any one cross section of the tube.

10.5 *Squareness of Cut* — The departure from squareness of the end of any pipe shall not exceed the following:

Outside Diameter in. (mm)	Tolerance
Up to 5/8 (15.9), incl	0.010 in. (0.25 mm)
Over 5/8 (15.9)	0.016 in./in. (0.016 mm/mm) of diameter

11. Workmanship, Finish, and Appearance

11.1 The material shall be free of defects of a nature that interfere with normal commercial applications. It shall be well cleaned and free of dirt.

TABLE 3
STANDARD DIMENSIONS, WEIGHTS, AND TOLERANCES

Nominal or Standard Pipe Size, in.	Outside Diameter, in. (mm)	Average Outside Diameter Tolerance,[A] in. (mm) All Minus	Wall Thickness, in. (mm)	Tolerance,[B] in. (mm)	Theoretical Weight, lb/ft (kg/m)
			Regular		
1/8	0.405 (10.3)	0.004 (0.10)	0.062 (1.57)	0.004 (0.10)	0.259 (0.385)
1/4	0.540 (13.7)	0.004 (0.10)	0.082 (2.08)	0.005 (0.13)	0.457 (0.680)
3/8	0.675 (17.1)	0.005 (0.13)	0.090 (2.29)	0.005 (0.13)	0.641 (0.954)
1/2	0.840 (21.3)	0.005 (0.13)	0.107 (2.72)	0.006 (0.15)	0.955 (1.42)
3/4	1.050 (26.7)	0.006 (0.15)	0.114 (2.90)	0.006 (0.15)	1.30 (1.93)
1	1.315 (33.4)	0.006 (0.15)	0.126 (3.20)	0.007 (0.18)	1.82 (2.71)
1 1/4	1.660 (42.2)	0.006 (0.15)	0.146 (3.71)	0.008 (0.20)	2.69 (4.00)
1 1/2	1.900 (48.3)	0.006 (0.15)	0.150 (3.81)	0.008 (0.20)	3.20 (4.76)
2	2.375 (60.3)	0.008 (0.20)	0.156 (3.96)	0.009 (0.23)	4.22 (6.28)
2 1/2	2.875 (73.0)	0.008 (0.20)	0.187 (4.75)	0.010 (0.25)	6.12 (9.11)
3	3.500 (88.9)	0.010 (0.25)	0.219 (5.56)	0.012 (0.30)	8.76 (13.0)
3 1/2	4.000 (102)	0.010 (0.25)	0.250 (6.35)	0.013 (0.33)	11.4 (17.0)
4	4.500 (114)	0.012 (0.30)	0.250 (6.35)	0.014 (0.36)	12.9 (19.2)
5	5.562 (141)	0.014 (0.36)	0.250 (6.35)	0.014 (0.36)	16.2 (24.1)
6	6.625 (168)	0.016 (0.41)	0.250 (6.35)	0.014 (0.36)	19.4 (28.9)
8	8.625 (219)	0.020 (0.51)	0.312 (7.92)	0.022 (0.56)	31.6 (47.0)
10	10.750 (273)	0.022 (0.56)	0.365 (9.27)	0.030 (0.76)	46.2 (68.7)
12	12.750 (324)	0.024 (0.61)	0.375 (9.52)	0.030 (0.76)	56.5 (84.1)
			Extra Strong		
1/8	0.405 (10.3)	0.004 (0.10)	0.100 (2.54)	0.006 (0.15)	0.371 (0.552)
1/4	0.540 (13.7)	0.004 (0.10)	0.123 (3.12)	0.007 (0.18)	0.625 (0.930)
3/8	0.675 (17.1)	0.005 (0.13)	0.127 (3.23)	0.007 (0.18)	0.847 (1.26)
1/2	0.840 (21.3)	0.005 (0.13)	0.149 (3.78)	0.008 (0.20)	1.25 (1.86)
3/4	1.050 (26.7)	0.006 (0.15)	0.157 (3.99)	0.009 (0.23)	1.71 (2.54)
1	1.315 (33.4)	0.006 (0.15)	0.182 (4.62)	0.010 (0.25)	2.51 (3.73)
1 1/4	1.660 (42.2)	0.006 (0.15)	0.194 (4.93)	0.010 (0.25)	3.46 (5.15)
1 1/2	1.900 (48.3)	0.006 (0.15)	0.203 (5.16)	0.011 (0.28)	4.19 (6.23)
2	2.375 (60.3)	0.008 (0.20)	0.221 (5.61)	0.012 (0.30)	5.80 (8.63)
2 1/2	2.875 (73.0)	0.008 (0.20)	0.280 (7.11)	0.015 (0.38)	8.85 (13.2)
3	3.500 (88.9)	0.010 (0.25)	0.304 (7.72)	0.016 (0.41)	11.8 (17.6)
3 1/2	4.000 (102)	0.010 (0.25)	0.321 (8.15)	0.017 (0.43)	14.4 (21.4)
4	4.500 (114)	0.012 (0.30)	0.341 (8.66)	0.018 (0.46)	17.3 (25.7)
5	5.562 (141)	0.014 (0.36)	0.375 (9.52)	0.019 (0.48)	23.7 (35.3)
6	6.625 (168)	0.016 (0.41)	0.437 (11.1)	0.027 (0.69)	32.9 (49.0)
8	8.625 (219)	0.020 (0.51)	0.500 (12.7)	0.035 (0.89)	49.5 (73.7)
10	10.750 (273)	0.022 (0.56)	0.500 (12.7)	0.040 (1.0)	62.4 (92.9)

NOTE 1 — All tolerances are plus and minus except as otherwise indicated.

[A] The average outside diameter of a tube is the average of the maximum and minimum outside diameters as determined at any one cross section of the pipe.

[B] Maximum deviation at any one point.

12. Sampling

12.1 *Sampling* — The lot size, portion size, and selection of sample pieces shall be as follows:

12.1.1 *Lot Size* — The lot size shall be as follows:

Pipe Size, in.	Lot Weight, lb (kg)
Up to 1½, incl	5 000 (2270) or fraction thereof
Over 1½ to 4, incl	10 000 (4550) or fraction thereof
Over 4	40 000 (18 100) or fraction thereof

12.1.2 *Portion Size* — Sample pieces shall be taken for test purposes from each lot according to the following schedule:

Number of Pieces in Lot	Number of Sample Pieces to be Taken[A]
1 to 50	1
51 to 200	2
201 to 1500	3
Over 1500	0.2% of total number of pieces in the lot, but not to exceed 10 sample pieces

[A] Each sample piece shall be taken from a separate tube.

13. Number of Tests and Results

13.1 *Chemical Analysis* — Samples for chemical analysis shall be taken in accordance with Practice E 55. Drillings, millings, etc., shall be taken in approximately equal weight from each of the sample pieces selected in accordance with 12.1.2 and combined into one composite sample. The minimum weight of the composite sample that is to be divided into three equal parts shall be 150 g.

13.1.1 Instead of sampling in accordance with Practice E 55, the manufacturer shall have the option of determining conformance to chemical composition as follows: Conformance shall be determined by the manufacturer by analyzing samples taken at the time the castings are poured or samples taken from the semi-finished product. If the manufacturer determines the chemical composition of the material during the course of manufacture, he shall not be required to sample and analyze the finished product. The number of samples taken for determination of chemical composition shall be as follows:

13.1.1.1 When samples are taken at the time the castings are poured, at least one sample shall be taken for each group of castings poured simultaneously from the same source of molten metal.

13.1.1.2 When samples are taken from the semi-finished product, a sample shall be taken to represent each 10 000 lb (4550 kg) or fraction thereof, except that not more than one sample shall be required per piece.

13.1.1.3 Due to the discontinuous nature of the processing of castings into wrought products, it is not practical to identify specific casting analysis with a specific quantity of finished material.

13.1.1.4 In the event that heat identification or traceability is required, the purchaser shall specify the details desired.

13.2 *Retests:*

13.2.1 If any test specimen shows defective machining or develops flaws, it shall be discarded and another specimen substituted.

13.2.2 If a bend test specimen fails, due to conditions of bending more severe than required by the specification, a retest shall be permitted on a new sample piece or on the remaining portion of the first sample piece.

13.2.3 If the results of the test on one of the specimens fail to meet the specified requirements, two additional specimens shall be taken from different sample pieces and tested. The results of the tests on both of these specimens shall meet the specified requirements. Failure of more than one specimen to meet the specified requirements for a particular property shall be cause for rejection of the entire lot.

13.2.4 If the chemical analysis fails to conform to the specified limits, analysis shall be made on a new composite sample prepared from additonal pieces selected in accordance with 12.1. The results of this retest shall comply with the specified requirements.

14. Test Methods

14.1 The properties enumerated in this specification shall, in case of disagreement, be determined in accordance with the following applicable test methods:

Test	ASTM Designation[A]
Chemical analysis	B 170[B], E 53, E 62, E 478
Tension	E 8
Expansion (pin test)	B 153
Eddy current	E 243

[A] See 2.1.

[B] Reference to Specification B 170 is to the suggested chemical methods in the annex thereof. When Committee E-1 has tested and published methods for assaying the low level impurities in copper, the Specification B 170 annex will be eliminated.

14.2 Tension test specimens shall be of the full section of the pipe and shall conform to the requirements of the Specimens for Pipe and Tube section, of Test Methods E 8, unless the limitations of the testing machine preclude the use of such a specimen. Test specimens conforming to Type No. 1 of Fig. 13, Tension Test Specimens for Large-Diameter Tubular Products, of Test Methods E 8 is permitted to be used when a full section specimen cannot be tested.

14.3 Whenever tension test results are obtained from both full size and machined test specimens and they differ, the results obtained from full size test specimens shall be used to determine conformance to the specification requirements.

14.4 Tension test results on material covered by this specification are not seriously affected by variations in speed of testing. A considerable range of testing speed is permissible; however, it is recommended that the rate of stressing to the yield strength shall not exceed 100 ksi (700 MPa)/min. Above the yield strength it is recommended that the movement per minute of the testing machine head under load shall not exceed 0.5 in./in. (0.5 mm/mm) of gage length (or distance between grips for full-section specimens).

15. Significance of Numerical Limits

15.1 For purposes of determining compliance with the specified limits for requirements of the properties listed in the following table, an observed value or a calculated value shall be rounded as indicated in accordance with the rounding method of Practice E 29.

Property	Rounded Unit for Observed or Calculated Value
Chemical composition	nearest unit in the last right-hand place of figures of the specified limit
Tensile strength Yield strength	nearest ksi (nearest 5 MPa)

16. Inspection

16.1 The manufacturer shall afford the inspector representing the purchaser all reasonable facilities, without charge, to satisfy him that the material is being furnished in accordance with the specified requirements.

17. Rejection and Rehearing

17.1 Material that fails to conform to the requirements of this specification shall be subject to rejection. Rejection is to be reported to the manufacturer or supplier promptly and in writing. In case of dissatisfaction with the results of the test, the manufacturer or supplier shall have the option to make claim for a rehearing.

18. Certification

18.1 The manufacturer shall furnish to the purchaser a certificate stating that each lot has been sampled, tested, and inspected in accordance with this specification and has met the requirements.

19. Packaging and Package Marking

19.1 The material shall be separated by size, composition, and temper, and prepared for shipment in such a manner as to ensure acceptance by common carrier for transportation and to afford protection from the normal hazards of transportation.

19.2 Each shipping unit shall be legibly marked with the purchase order number, metal or alloy designation, temper, size, total length or piece count or both, and name of supplier. The specification number shall be shown, when specified.

20. Mill Test Report

20.1 When specified on the purchase order, the manufacturer shall furnish to the purchaser a test report showing results of tests required by the specification.

21. Keywords

21.1 copper pipe; extra strong; regular; standard sizes

APPENDIX

(Nonmandatory Information)

X1. METRIC EQUIVALENTS

X1.1 The SI unit for strength properties now shown is in accordance with the International System of Units (SI). The derived SI unit for force is the newton (N), which is defined as that force which when applied to a body having a mass of one kilogram gives it an acceleration of one meter per second squared ($N = kg \cdot m/s^2$). The derived SI unit for pressure or stress in the newton per square meter (N/m^2), which has been named the pascal (Pa) by the General Conference on Weights and Measures. Since 1 ksi = 6 894 757 Pa the metric equivalents are expressed as megapascal (MPa), which is the same as MN/m^2 and N/mm^2.

SPECIFICATION FOR SEAMLESS RED BRASS PIPE, STANDARD SIZES

SB-43

(Identical with ASTM Specification B 43-96 for the alloy and temper covered except for editorial differences and the deletion of para. 4.1.5, the Supplementary Requirements for government procurement, and the Appendix. Certification has been made mandatory.)

1. Scope

1.1 This specification covers seamless red brass (Copper Alloy UNS No. C23000) pipe in all nominal pipe sizes, both regular and extra-strong. In the annealed temper (O61), the pipe is suitable for use in plumbing, boiler feed lines, and for similar purposes. In the drawn general purpose temper (H58), the pipe is suitable for architectural applications, such as guard railings and stair hand railings.

1.2 The values stated in inch-pound units are to be regarded as the standard. The values given in parentheses are provided for information purposes only.

1.3 The following hazard caveat pertains only to the test method portion, Section 9, of this specification. *This standard does not purport to address all of the safety concerns, if any, associated with its use. It is the responsibility of the user of this standard to establish appropriate safety and health practices and determine the applicability of regulatory limitations prior to use.*

1.4 Warning — Mercury is a definite health hazard in use and disposal. (See 9.1.)

2. Referenced Documents

2.1 The following documents of the issue in effect on date of material purchase form a part of this specification to the extent referenced herein:

2.1.1 *ASTM Standards:*

B 153 Test Method for Expansion (Pin Test) of Copper and Copper-Alloy Pipe and Tubing
B 154 Test Method for Mercurous Nitrate Test for Copper and Copper Alloys
B 601 Practice for Temper Designations for Copper and Copper Alloys — Wrought and Cast
E 8 Test Methods of Tension Testing of Metallic Materials
E 29 Practice for Using Significant Digits in Test Data to Determine Conformance With Specification
E 53 Test Methods for Chemical Analysis of Copper
E 55 Practice for Sampling Wrought Nonferrous Metals and Alloys for Determination of Chemical Composition
E 62 Test Methods for Chemical Analysis of Copper and Copper Alloys (Photometric Methods)
E 112 Test Methods for Determining Average Grain Size
E 243 Practice for Electromagnetic (Eddy Current) Examination of Copper and Copper Alloy Tubes
E 478 Test Methods for Chemical Analysis of Copper Alloys
E 527 Practice for Numbering Metals and Alloys (UNS)

3. Terminology

3.1 *Definitions:*

3.1.1 *tube, seamless* — a tube produced with a continuous periphery in all stages of the operations.

3.1.1.1 *pipe* — a seamless tube conforming to the particular dimensions commercially known as nominal or standard pipe sizes.

3.1.2 *lengths* — straight pieces of the product.

3.1.2.1 *standard* — uniform lengths recommended in a Simplified Practice Recommendation or established as a Commercial Standard.

3.2 *Description of Term Specific to This Standard:*

3.2.1 *capable of* — as used in this specification, the test need not be performed by the producer of the material. However, should subsequent testing by the purchaser

establish that the material does not meet these requirements the material shall be subject to rejection.

4. Ordering Information

4.1 Orders for material under this specification shall include the following information:

4.1.1 Temper (see 6.1),

4.1.2 Pipe size, regular or extra-strong (see 11.2),

4.1.3 Length (see 11.3),

4.1.4 Total length of each size,

4.1.5 DELETED

4.1.6 Certification is required (see 20.1),

4.1.7 Mill test report, if required (see 21.1),

4.1.8 Hydrostatic test, if required,

4.1.9 Pneumatic test, if required, and

4.1.10 Mercurous nitrate test, if required (see Section 9).

5. Chemical Composition

5.1 The material shall conform to the following chemical requirements:

Copper, %	84.0 to 86.0
Lead, max, %	0.05
Iron, max, %	0.05
Zinc	Remainder

5.2 These specification limits do not preclude the presence of other elements. Limits for unnamed elements are to be established by agreement between manufacturer or supplier and purchaser.

5.2.1 For copper alloys in which zinc is specified as the remainder, either copper or zinc shall be permitted to be taken as the difference between the sum of all the elements analyzed and 100%.

5.2.1.1 When all the elements in the table in 5.1 are analyzed, their sum shall be 99.8% minimum.

6. Temper

6.1 All pipe shall normally be furnished in the O61 (annealed) (see Practice B 601) condition.

6.2 In the O61 (annealed) temper, the degree of annealing shall be sufficient to produce complete recrystallization with an average grain size not in excess of 0.050 mm. The surface of the test specimen for grain size determination shall approximate a radial longitudinal section and shall be prepared and examined in accordance with Test Methods E 112.

TABLE 1
TENSILE REQUIREMENTS

Temper Designation		Tensile Strength, min ksi[A]	Yield Strength,[B] min ksi[A]	Elongation in 2 in., min, %
Standard	Former			
O61	Annealed	40.0	12.0	35
H58	Drawn general purpose	40.0	18.0	...

[A] ksi = 1000 psi
[B] At 0.5% extension under load.

6.3 The pipe is permitted to be furnished in the H58 (drawn general purpose) temper, if agreed upon between the manufacturer and the purchaser. (See Table 1.)

7. Mechanical Properties

7.1 Material in the O61 (annealed) temper shall have tensile properties as prescribed in Table 1.

7.2 All H58 (drawn general purpose) material shall have the tensile properties as prescribed in Table 1.

8. Expansion Test

8.1 Specimens in the O61 (annealed) temper shall withstand an expansion of 25% of the outside diameter when expanded in accordance with Test Method B 153. The expanded pipe shall show no cracking or rupture visible to the unaided eye. Pipe ordered in the drawn (H) condition is not subject to this test.

NOTE — The term "unaided eye," as used herein, permits the use of corrective spectacles necessary to obtain normal vision.

8.2 As an alternative to the expansion test for pipe over 4 in. (102 mm) in diameter in the O61 (annealed) condition, a section 4 in. (102 mm) in length shall be cut from the end of one of the lengths for a flattening test. This 4-in. specimen shall be flattened so that a gage set at three times the wall thickness will pass over the pipe freely throughout the flattened part. The pipe so tested shall develop no cracks or flaws visible to the unaided eye (see Note) as a result of this test. In making the flattening test the elements shall be slowly flattened by one stroke of the press.

9. Mercurous Nitrate Test

9.1 Warning — Mercury is a definite health hazard and therefore equipment for the detection and removal

of mercury vapor produced in volatilization is recommended. The use of rubber gloves in testing is advisable.

9.2 When the test is required to be performed, the test specimens, cut 6 in. (152 mm) in length, shall, after proper cleaning, withstand an immersion for 30 min without cracking in the standard mercurous nitrate solution prescribed in Method B 154. Immediately after removal from the solution, the specimen shall be wiped free of excess mercury and examined for cracks.

9.3 Product of the O61 (annealed) temper shall pass the mercurous nitrate test when tested in accordance with Test Method B 154.

9.3.1 The test need not be performed except when indicated in the contract or purchase order at the time of placing of the order.

10. Nondestructive Testing

10.1 The material shall be tested in the final size but is permitted to be tested prior to the final anneal or heat treatment, when these thermal treatments are required, unless otherwise agreed upon by the manufacturer or supplier and purchaser.

10.2 *Eddy-Current Test* — Each piece of material from $\frac{1}{8}$ in. (3.18 mm) up to and including $2\frac{1}{2}$ in. (63.5 mm) nominal outside diameter or within the capabilities of the eddy-current tester, shall be subjected to an eddy-current test. Testing shall follow the procedures of Practice E 243 except for determination of "end effect." The material shall be passed through an eddy-current testing unit adjusted to provide information on the suitability of the material for the intended application.

10.2.1 Notch-depth standards rounded to the nearest 0.001 in. (0.025 mm), shall be 10% of the nominal wall thickness. Notch-depth tolerances shall be ±0.0005 in. (0.013 mm). Alternatively, when a manufacturer uses speed-insensitive equipment that allows the selection of a maximum imbalance signal, a maximum imbalance signal of 0.3% is permitted to be used.

10.2.2 Material that does not actuate the signaling device of the eddy-current test shall be considered as conforming to the requirements of this test. Material with discontinuities indicated by the testing unit is permitted to be reexamined or retested at the option of the manufacturer to determine whether the discontinuity is cause for rejection. Signals that are found to have been caused by minor mechanical damage, soil, or moisture shall not be cause for rejection of the material provided the dimensions of the material are still within prescribed limits and the material is suitable for its intended application.

10.3 *Hydrostatic Test* — When specified, the material shall stand, without showing evidence of leakage, an internal hydrostatic pressure sufficient to subject the material to a fiber stress of 6000 psi (41 MPa), determined by the following equation for thin hollow cylinders under tension. The pipe need not be tested at a hydrostatic pressure of over 1000 psi (6.9 MPa) unless so specified.

$$P = 2St/(D - 0.8t)$$

where:

P = hydrostatic pressure, psi (or MPa),
t = thickness of pipe wall, in. (or mm),
D = outside diameter of the pipe, in. (or mm), and
S = allowable stress of the material, psi (or MPa).

10.3.1 For material less than $\frac{1}{2}$ in. (12.7 mm) in outside diameter and less than 0.060 in. (1.5 mm) in wall thickness, the test is permitted to be made at the option of the manufacturer by pneumatically testing to the requirements of 10.4.

10.4 *Pneumatic Test* — When specified, the material shall be subjected to an internal air pressure of 60 psi (415 kPa) minimum for 5 s without showing evidence of leakage. The test method used shall permit easy visual detection of any leakage, such as by having the material under water or by the pressure-differential method. Any evidence of leakage shall be cause for rejection.

11. Dimensions and Permissible Variations

11.1 For the purpose of determining conformance with the dimensional requirements prescribed in this specification, any measured value outside the limiting values for any dimenisons may be cause for rejection.

11.2 *Standard Dimensions, Wall Thickness, and Diameter Tolerances* — The standard dimensions, wall thickness, and diameter tolerances shall be in accordance with Table 2.

11.3 *Length and Length Tolerances* — The standard length of red brass pipe is 12 ft (3.66 m) with a tolerance of $\pm\frac{1}{2}$ in. (13 mm).

11.4 *Squareness of Cut* — The departure from squareness of the end of any pipe shall not exceed the following:

Outside Diameter, in. (mm)	Tolerance
Up to $\frac{5}{8}$ (15.9), incl.	0.010 in. (0.25 mm)
Over $\frac{5}{8}$ (15.9)	0.016 in./in. (0.016 mm/mm) of diameter

11.5 *Roundness* — The roundness tolerance for straight length tubes with a wall thickness to outside diameter ratio of 0.01 to 0.05 (inclusive) shall be 6%

TABLE 2
STANDARD DIMENSIONS, WEIGHTS, AND TOLERANCES

Nominal or Standard Pipe Size, in.	Outside Diameter, in. (mm)	Average Outside Diameter Tolerances,[A] in. (mm) All Minus	Wall Thickness, in. (mm)	Tolerance,[B] in. (mm)	Theoretical Weight, lb/ft (kg/m)
		Regular			
1/8	0.405 (10.3)	0.004 (0.10)	0.062 (1.57)	0.004 (0.10)	0.253 (0.376)
1/4	0.540 (13.7)	0.004 (0.10)	0.082 (2.08)	0.005 (0.13)	0.447 (0.665)
3/8	0.675 (17.1)	0.005 (0.13)	0.090 (2.29)	0.005 (0.13)	0.627 (0.933)
1/2	0.840 (21.3)	0.005 (0.13)	0.107 (2.72)	0.006 (0.15)	0.934 (1.39)
3/4	1.050 (26.7)	0.006 (0.15)	0.114 (2.90)	0.006 (0.15)	1.27 (1.89)
1	1.315 (33.4)	0.006 (0.15)	0.126 (3.20)	0.007 (0.18)	1.78 (2.65)
1 1/4	1.660 (42.2)	0.006 (0.15)	0.146 (3.71)	0.008 (0.20)	2.63 (3.91)
1 1/2	1.900 (48.3)	0.006 (0.15)	0.150 (3.81)	0.008 (0.20)	3.13 (4.66)
2	2.375 (60.3)	0.008 (0.20)	0.156 (3.96)	0.009 (0.23)	4.12 (6.13)
2 1/2	2.875 (73.0)	0.008 (0.20)	0.187 (4.75)	0.010 (0.25)	5.99 (8.91)
3	3.500 (88.9)	0.010 (0.25)	0.219 (5.56)	0.012 (0.30)	8.56 (12.7)
3 1/2	4.000 (102)	0.010 (0.25)	0.250 (6.35)	0.013 (0.33)	11.2 (16.7)
4	4.500 (114)	0.012 (0.30)	0.250 (6.35)	0.014 (0.36)	12.7 (18.9)
5	5.562 (141)	0.014 (0.36)	0.250 (6.35)	0.014 (0.36)	15.8 (23.5)
6	6.625 (168)	0.016 (0.41)	0.250 (6.35)	0.014 (0.36)	19.0 (28.3)
8	8.625 (219)	0.020 (0.51)	0.312 (7.92)	0.022 (0.56)	30.9 (46.0)
10	10.750 (273)	0.022 (0.56)	0.365 (9.27)	0.030 (0.76)	45.2 (67.3)
12	12.750 (324)	0.024 (0.61)	0.375 (9.52)	0.030 (0.76)	55.3 (82.3)
		Extra Strong			
1/8	0.405 (10.3)	0.004 (0.10)	0.100 (2.54)	0.006 (0.15)	0.363 (0.540)
1/4	0.540 (13.7)	0.004 (0.10)	0.123 (3.12)	0.007 (0.18)	0.611 (0.909)
3/8	0.675 (17.1)	0.005 (0.13)	0.127 (3.23)	0.007 (0.18)	0.829 (1.23)
1/2	0.840 (21.3)	0.005 (0.13)	0.149 (3.78)	0.008 (0.20)	1.23 (1.83)
3/4	1.050 (26.7)	0.006 (0.15)	0.157 (3.99)	0.009 (0.23)	1.67 (2.48)
1	1.315 (33.4)	0.006 (0.15)	0.182 (4.62)	0.010 (0.25)	2.46 (3.66)
1 1/4	1.660 (42.2)	0.006 (0.15)	0.194 (4.93)	0.010 (0.25)	3.39 (5.04)
1 1/2	1.900 (48.3)	0.006 (0.15)	0.203 (5.16)	0.011 (0.28)	4.10 (6.10)
2	2.375 (60.3)	0.008 (0.20)	0.221 (5.61)	0.012 (0.30)	5.67 (8.44)
2 1/2	2.875 (73.0)	0.008 (0.20)	0.280 (7.11)	0.015 (0.38)	8.66 (12.9)
3	3.500 (88.9)	0.010 (0.25)	0.304 (7.72)	0.016 (0.41)	11.6 (17.3)
3 1/2	4.000 (102)	0.010 (0.25)	0.321 (8.15)	0.017 (0.43)	14.1 (21.0)
4	4.500 (114)	0.012 (0.30)	0.341 (8.66)	0.018 (0.46)	16.9 (25.1)
5	5.562 (141)	0.014 (0.36)	0.375 (9.52)	0.019 (0.48)	23.2 (34.5)
6	6.625 (168)	0.016 (0.41)	0.437 (11.1)	0.027 (0.69)	32.2 (47.9)
8	8.625 (219)	0.020 (0.51)	0.500 (12.7)	0.035 (0.89)	48.4 (72.0)
10	10.750 (273)	0.022 (0.56)	0.500 (12.7)	0.040 (1.0)	61.1 (90.9)

NOTE 1 — All tolerances are plus and minus except as otherwise indicated.

[A] The average outside diameter of a tube is the average of the maximum and minimum outside diameters as determined at any one cross section of the pipe.

[B] Maximum deviation at any one point.

of the nominal outside diameter. For tubes with a wall thickness to outside diameter ratio over 0.05, the roundness tolerance shall be 3% of the nominal outside diameter.

11.5.1 The measurement for roundness shall be made from the outside diameter. The deviation from roundness is measured as the difference between the major and minor diameters as determined at any one cross section of the tube. The major and minor diameters are the diameters of two concentric circles just enclosing the outside surface of the tube at the cross section.

12. Workmanship, Finish, and Appearance

12.1 The material shall be free of defects of a nature that interfere with normal commercial applications. It shall be well cleaned and free of dirt.

13. Sampling

13.1 *Sampling* — The lot size, portion size, and selection of sample pieces shall be as follows:

13.1.1 *Lot Size* — The lot size shall be as follows:

Pipe Size, in.	Lot Weight, lb (kg)
Up to 1½, incl.	5 000 (2270) or fraction thereof
Over 1½ to 4, incl.	10 000 (4550) or fraction thereof
Over 4	40 000 (18 100) or fraction thereof

13.1.2 *Portion Size* — Sample pieces shall be taken for test purposes from each lot according to the following schedule:

Number of Pieces in Lot	Number of Sample Pieces to be Taken[A]
1 to 50	1
51 to 200	2
201 to 1500	3
Over 1500	0.2% of total number of pieces in the lot, but not to exceed 10 sample pieces

[A] Each sample piece shall be taken from a separate tube.

13.1.3 *Sampling for Visual and Dimensional Examination* — Minimum sampling for visual and dimensional examination shall be as follows:

Lot Size (Pieces/Lot)	Sample Size
2 to 8	Entire lot
9 to 90	8
91 to 150	12
151 to 280	19
281 to 500	21
501 to 1200	27
1201 to 3200	35
3201 to 100 000	38
10 001 to 350 000	46

In all cases, the acceptance number is zero and the rejection number is one. Rejected lots are permitted to be screened and resubmitted for visual and dimensional examination. All defective items shall be replaced with acceptable items prior to lot acceptance.

14. Number of Tests and Retests

14.1 *Chemical Analysis* — Samples for chemical analysis shall be taken in accordance with Practice E 55. Drillings, millings, etc., shall be taken in approximately equal weight from each of the sample pieces selected in accordance with 13.1.2 and combined into one composite sample. The minimum weight of the composite sample that is to be divided into three equal parts shall be 150 g.

14.1.1 Instead of sampling in accordance with Practice E 55, the manufacturer shall have the option of determining conformance to chemical composition as follows: Conformance shall be determined by the manufacturer by analyzing samples taken at the time the castings are poured or samples taken from the semi-finished product. If the manufacturer determines the chemical composition of the material during the course of manufacture, he shall not be required to sample and analyze the finished product. The number of samples taken from determination of chemical composition shall be as follows:

14.1.1.1 When samples are taken at the time the castings are poured, at least one sample shall be taken for each group of castings poured simultaneously from the same source of molten metal.

14.1.1.2 When samples are taken from the semi-finished product, a sample shall be taken to represent each 10 000 lb (4550 kg) or fraction thereof, except that not more than one sample shall be required per piece.

14.1.1.3 Due to the discontinuous nature of the processing of castings into wrought products, it is not practical to identify specific casting analysis with a specific quantity of finished material.

14.1.1.4 In the event that heat identification or traceability is required, the purchaser shall specify the details desired.

14.2 *Retests:*

14.2.1 If any test specimen shows defective machining or develops flaws, it shall be discarded and another specimen substituted.

14.2.2 If the results of the test one of the specimens fail to meet the specified requirements, two additional specimens shall be taken from different sample pieces and tested. The results of the tests on both of these specimens shall meet the specified requirements. Failure of

more than one specimen to meet the specified requirements for a particular property shall be cause for rejection of the entire lot.

14.2.3 If the chemical analysis fails to conform to the specified limits, analysis shall be made on a new composite sample prepared from additional pieces selected in accordance with 13.1. The results of this retest shall comply with the specified requirements.

15. Test Methods

15.1 The properties enumerated in this specification shall, in case of disagreement, be determined in accordance with the following applicable methods:

Test	ASTM Designation (Section 2)
Chemical analysis	E 53, E 62, E 478
Tension	E 8
Expansion (pin test)	B 153
Mercurous nitrate	B 154

15.2 Tension test specimens shall be of the full section of the pipe and shall conform to the requirements of the section, Specimens for Pipe and Tube, of Methods E 8, unless the limitations of the testing machine preclude the use of such a specimen. Test specimens conforming to Type No. 1 of Fig. 13, Tension Test Specimens for Large-Diameter Tubular Products, of Methods E 8 is permitted to be used when a full section specimen cannot be tested.

15.3 Whenever tension test results are obtained from both full size and from machined test specimens and they differ, the results obtained from full size test specimens shall be used to determine conformance to the specification requirements.

15.4 Tension test results on material covered by this specification are not seriously affected by variations in speed of testing. A considerable range of testing speed is permissible; however, it is recommended that the rate of stressing to the yield strength not exceed 100 ksi (690 MPa)/min. Above the yield strength it is recommended that the movement per minute of the testing machine head under load not exceed 0.5 in./in. (0.5 mm/mm) of gage length (or distance between grips for full-section specimens).

16. Significance of Numerical Limits

16.1 For purposes of determining compliance with the specified limits for requirements of the properties listed in the following table, an observed value or a calculated value shall be rounded off as indicated in accordance with the rounding method of Practice E 29.

Property	Rounded Off Unit for Observed or Calculated Value
Chemical composition	Nearest unit in the last right-hand place of figures of the specified limit
Tensile strength, yield strength	Nearest ksi (nearest 5 MPa)

17. Inspection

17.1 The manufacturer shall afford the inspector representing the purchaser, all reasonable facilities, without charge, to satisfy him that the material is being furnished in accordance with the specified requirements.

18. Rejection and Rehearing

18.1 Material that fails to conform to the requirements of this specification shall be subject to rejection. Rejection is to be reported to the manufacturer or supplier promptly and in writing. In case of dissatisfaction with the results of the test, the manufacturer or supplier shall have the option to make claim for a rehearing.

19. Packaging and Package Marking

19.1 The material shall be separated by size, composition, and temper, and prepared for shipment in such a manner as to ensure acceptance by common carrier for transportation and to afford protection from the normal hazards of transportation.

19.2 Each shipping unit shall be legibly marked with the purchase order number, metal or alloy designation, temper, size, total length or piece count, or both, and name of supplier. The specification number shall be shown, when specified.

20. Certification

20.1 The manufacturer shall furnish to the purchaser a certificate stating that each lot has been sampled, tested, and inspected in accordance with this specification and has met the requirements.

21. Mill Test Report

21.2 When specified on the purchase order, the manufacturer shall furnish to the purchaser a test report showing results of tests required by the specification.

22. Keywords

22.1 copper alloy UNS No. C23000; red brass pipe

APPENDIX

(Nonmandatory Information)

X1. METRIC EQUIVALENTS

X1.1 The SI unit for strength properties now shown is in accordance with the International System of Units (SI). The derived SI unit for force is the newton (N), which is defined as that force which when applied to a body having a mass of one kilogram gives it an acceleration of one meter per second squared ($N = kg \cdot m/s^2$). The derived SI unit for pressure or stress is the newton per square meter (N/m^2), which has been named the pascal (Pa) by the General Conference on Weights and Measures. Since 1 ksi = 6 894 757 Pa the metric equivalents are expressed as megapascal (MPa), which is the same as MN/m^2 and N/mm^2.

SPECIFICATION FOR STEAM OR VALVE BRONZE CASTINGS

SB-61

(Identical with ASTM Specification B 61-02 for the alloy covered except for the deletion of Appendix X1. Certification has been made mandatory.) 04

1. Scope

1.1 This specification establishes requirements for a high-grade steam-metal or valve-bronze alloy (Copper Alloy UNS No. C92200) used for component castings of valves, flanges, and fittings.

1.2 The castings covered are used in products that may be manufactured in advance and supplied from stock by the manufacturer or other dealer.

1.3 The values stated in inch-pound units are to be regarded as the standard. Metric values given in parentheses are for information only.

2. Referenced Documents

2.1 The following documents of the issue in effect on date of material purchase form a part of this specification to the extent referenced herein:

2.2 *ASTM Standards:*

B 208 Practice for Preparing Tension Test Specimens for Copper-Base Alloys for Sand, Permanent Mold, Centrifugal, and Continuous Castings

B 824 Specification for General Requirements for Copper Alloy Castings

E 527 Practice for Numbering Metals and Alloys (UNS)

2.3 *MSS Standards:*

SP-25 Standard Marking System for Valves, Fittings, Flanges and Unions

3. Ordering Information

3.1 Orders for castings under this specification shall include the following:

3.1.1 Quantity of castings required

3.1.2 Copper Alloy UNS No. (Table 1)

3.1.3 Specification title, number, and year of issue

3.1.4 Pattern or drawing number and condition (as-cast, machined, and so forth)

3.1.5 Chemical analysis of residual elements if specified in the purchase order (Specification B 824)

3.1.6 Pressure test requirements, if specified in the purchase order (Specification B 824)

3.1.7 Soundness requirements, if specified in the purchase order (Specification B 824)

3.1.8 Certification (Specification B 824)

3.1.9 Foundry test report, if specified in the purchase order (Specification B 824)

3.1.10 Witness inspection, if specified in the purchase order (Specification B 824)

3.1.11 ASME boiler and pressure vessel application (Section 9)

3.1.12 Product marking, if specified in the purchase order (Specification B 824 and Section 10)

3.2 When material is purchased for agencies of the U. S. Government, the Supplementary Requirements in Specification B 824 may be specified.

4. Chemical Composition

4.1 The alloy shall conform to the chemical requirements for major elements specified in Table 1.

4.2 These specification limits do not preclude the presence of other elements. Limits may be established for unnamed elements by agreement between manufacturer or supplier and purchaser. Copper or zinc may be given as remainder and may be taken as the difference

TABLE 1
CHEMICAL REQUIREMENTS, COPPER ALLOY UNS NO. C92200

Major Elements	Composition, % Max (Except as Indicated)
Copper	86.0–90.0
Tin	5.5–6.5
Lead	1.0–2.0
Zinc	3.0–5.0
Nickel (incl Cobalt)	1.0[A]
Residual Elements	**Composition, % Max (Except as Indicated)**
Iron	0.25
Antimony	0.25
Sulfur	0.05
Phosphorus	0.05
Aluminum	0.005
Silicon	0.005

[A] In determining copper minimum, copper may be calculated as copper plus nickel.

between the sum of all elements analyzed and 100%. When all named elements in Table 1 are analyzed, their sum shall be as follows:

Copper plus named elements, 99.3% minimum (1)

4.3 It is recognized that residual elements may be present in cast copper base alloys. Analysis shall be made for residual elements only when specified in the purchase order (Specification B 824).

5. Mechanical Properties

5.1 Mechanical properties shall be determined from separately cast test bars and shall meet the requirements shown in Table 2.

6. Casting Repair

6.1 Castings shall not be plugged, welded, burned-in, or impregnated.

TABLE 2
TENSILE PROPERTIES

Tensile strength, min., ksi[A] (MPa)	34 (235)
Yield strength,[C] min., ksi[A] (MPa)	16 (110)
Elongation in 2 in. (50.8 mm), min. %	24

[A] ksi = 1000 psi.

[C] Yield strength shall be determined as the stress producing an elongation under load of 0.5% that is 0.01 in. (0.25 mm) in a gage length of 2 in. (51 mm).

7. General Requirements

7.1 Material furnished under this specification shall conform to the applicable requirements of Specification B 824.

8. Sampling

8.1 Copper Alloy UNS No. C92200 test bar castings shall be cast to the form and dimensions shown in Figs. 2, 3, or 4 of Practice B 208.

9. Certification

9.1 The certification requirements of Specification B 824 are mandatory.

10. Product Marking

10.1 Valves, flanges, and fittings shall be marked in accordance with the latest revision of the Standard Marking System for Valves, Fittings, Flanges, and Unions (No. SP-25) of the Manufacturers Standardization Society of the Valve and Fittings Industry, and in such position as not to injure the usefulness of the casting.

11. Keywords

11.1 Navy M castings; steam bronze castings; valve castings

SPECIFICATION FOR COMPOSITION BRONZE OR OUNCE METAL CASTINGS

SB-62

(Identical with ASTM Specification B 62-02 for the alloy covered except for the deletion of Appendix X1. Certification has been made mandatory.) 04

1. Scope

1.1 This specification establishes requirements for an alloy having a composition of copper, tin, lead, and zinc, used for component castings of valves, flanges, and fittings. The common trade name of this alloy is 85-5-5-5; the correct identification is Copper Alloy UNS No. C83600.

1.2 The castings covered are used in products that may be manufactured in advance and supplied from stock from the manufacturer or other dealer.

1.3 The values stated in inch-pound units are to be regarded as the standard. Metric values given in parentheses are for information only.

2. Referenced Documents

2.1 The following documents of the issue in effect on date of material purchase form a part of this specification to the extent referenced herein:

2.2 *ASTM Standards:*

B 208 Practice for Preparing Tension Test Specimens for Copper-Base Alloys for Sand, Permanent Mold, Centrifugal, and Continuous Castings

B 824 Specification for General Requirements for Copper-Alloy Castings

E 527 Practice for Numbering Metals and Alloys

2.3 *MSS Standards:*

SP-25 Standard Marking System for Valves, Fittings, Flanges and Unions

3. Ordering Information

3.1 Orders for castings under this specification shall include the following:

3.1.1 Quantity of castings required

3.1.2 Copper Alloy UNS No. (Table 1)

3.1.3 Specification title, number, and year of issue

3.1.4 Pattern or drawing number and condition (as-cast, machined, and so forth)

3.1.5 Chemical analysis of residual elements, if specified in the purchase order Specification B 824)

3.1.6 Pressure test requirements, if specified in the purchase order (Specification B 824)

3.1.7 Soundness requirements, if specified in the purchase order (Specification B 824)

3.1.8 Certification (Specification B 824)

3.1.9 Foundry test report, if specified in the purchase order (Specification B 824)

3.1.10 Witness inspection, if specified in the purchase order (Specification B 824)

3.1.11 ASME Boiler and Pressure Vessel application (Section 9)

3.1.12 Product marking, if specified in the purchase order (Specification B 824 and Section 10)

3.2 When material is purchased for agencies of the U.S. Government, the Supplementary Requirements in Specification B 824 may be specified.

4. Chemical Composition

4.1 The alloy shall conform to the requirements for major elements specified in Table 1.

4.2 These specification limits do not preclude the presence of other elements. Limits may be established for unnamed elements by agreement between manufacturer or supplier and purchaser. Copper or zinc may be

TABLE 1
CHEMICAL REQUIREMENTS, COPPER ALLOY UNS NO. C83600

Major Elements	Composition, % max (Except as Indicated)
Copper	84.0–86.0
Tin	4.0–6.0
Lead	4.0–6.0
Zinc	4.0–6.0
Nickel (incl Cobalt)	1.0[A]
Residual Elements	**Composition, % max (Except as indicated)**
Iron	0.30
Antimony	0.25
Sulfur	0.08
Phosphorus	0.05
Aluminum	0.005
Silicon	0.005

[A] In determining copper minimum, copper may be calculated as copper plus nickel.

given as remainder and may be taken as the difference between the sum of all elements analyzed and 100%. When all named elements in Table 1 are analyzed, their sum shall be as follows:

Copper Plus Named Elements, 99.3% Minimum (1)

4.3 It is recognized that residual elements may be present in cast copper base alloys. Analysis shall be made for residual elements only when specified in the purchase order (Specification B 824).

5. Mechanical Properties

5.1 Mechanical properties shall be determined from separately cast test bars and shall meet the requirements shown in Table 2.

6. Casting Repair

6.1 Castings shall not be repaired, plugged, welded or burned-in.

TABLE 2
TENSILE PROPERTIES

Tensile strength, min., ksi[A] (MPa)	30 (205)
Yield strength,[C] min., ksi[A] (MPa)	14 (95)
Elongation in 2 in. or 50 mm, min. %	20

[A] ksi = 1,000 psi.
[C] Yield strength shall be determined as the stress producing an elongation under load of 0.5%, that is, 0.01 in. (0.25 mm) in a gage length of 2 in. (51 mm).

7. General Requirements

7.1 Material furnished under this specification shall conform to the applicable requirements of Specification B 824.

8. Sampling

8.1 Copper Alloy UNS No. C83600 test bar castings shall be cast to the form and dimensions shown in Fig. 2, Fig. 3, or Fig. 4 of Practice B 208.

9. Certification

9.1 The certification requirements of Specification B 824 are mandatory.

10. Packaging and Package Marking

10.1 Valves, flanges, and fittings shall be marked in accordance with the latest revision of the Standard Marking System for Valves, Fittings, Flanges, and Unions (No. SP-25) of the Manufacturers Standardization Society of the Valve and Fittings Industry, and in such position as not to injure the usefulness of the casting.

11. Keywords

11.1 copper-alloy castings; ounce metal castings; red brass castings; valve castings

SPECIFICATION FOR SEAMLESS COPPER TUBE

SB-75

(Identical with ASTM Specification B 75-95a for the alloys and tempers covered except that mechanical testing and certification have been made mandatory.)

1. Scope

1.1 This specification establishes the requirements for seamless, round, rectangular, and square copper tube suitable for general engineering applications.

1.1.1 Tubes made from any of the following Copper UNS No. designations may be supplied unless otherwise specified in the contract or purchase order:

Copper UNS No.	Previously Used Designation[A]	Type of Copper
C10200	OF	Oxygen-free without residual deoxidants
C12000	DLP	Phosphorus deoxidized, low residual phosphorus
C12200	DHP	Phosphorus deoxidized, high residual phosphorus

[A] Designations of Specification B 75–65.

1.2 The following hazard statement pertains only to the test method described in Sections 20.5.2.1, 21.2.9, and 21.2.10 of this specification: *This standard does not purport to address all of the safety concerns, if any, associated with its use. It is the responsibility of the user of this standard to establish appropriate safety and health practices and determine the applicability of regulatory limitations prior to use.*

2. Referenced Documents

2.1 *ASTM Standards:*

B 153 Test Method for Expansion (Pin Test) of Copper and Copper-Alloy Pipe and Tubing

B 170 Specification for Oxygen-Free Electrolytic Copper-Refinery Shapes

B 193 Test Method for Resistivity of Electrical Conductor Materials

B 577 Test Methods for Hydrogen Embrittlement of Copper

B 601 Practice for Temper Designations for Copper and Copper Alloys — Wrought and Cast

E 3 Test Methods of Preparation of Metallographic Specimens

E 8 Test Methods for Tension Testing of Metallic Materials

E 18 Test Methods for Rockwell Hardness and Rockwell Superficial Hardness of Metallic Materials

E 53 Test Methods for Chemical Analysis of Copper

E 62 Test Methods for Chemical Analysis of Copper and Copper Alloys (Photometric Methods)

E 112 Test Methods for Determining Average Grain Size

E 243 Practice for Electromagnetic (Eddy-Current) Examination of Copper and Copper-Alloy Tubes

E 255 Practice for Sampling Copper and Copper Alloys for Determination of Chemical Composition

E 527 Practice for Numbering Metals and Alloys (UNS)

2.2 *ASME Standard:*

SB-251 Specification for General Requirements for Wrought Seamless Copper and Copper Alloy Tube

3. Ordering Information

3.1 Orders for product should include the following information:

3.1.1 Copper UNS No. (for example, C10100);

3.1.2 Temper (Section 8);

3.1.3 Dimensions: diameter or distance between parallel surfaces and wall thickness (Section 17);

3.1.4 Length;

3.1.5 How furnished: coils or straight lengths;

3.1.6 Number of pieces or footage: each size and type;

3.1.7 Total weight;

3.1.8 When product is purchased for ASME Boiler and Pressure Vessel Code application; and

3.1.9 When product is purchased for agencies of the U.S. government.

3.2 The following options are available and should be specified at the time of placing the order, when required:

3.2.1 Electrical mass resistivity test;

3.2.2 Hydrogen embrittlement test;

3.2.3 Hydrostatic test;

3.2.4 Pneumatic test;

3.2.5 Certification; and

3.2.6 Test report.

4. General Requirements

4.1 The following sections of Specification SB-251 are a part of this specification.

4.1.1 Terminology;

4.1.2 Materials and Manufacture;

4.1.3 Workmanship, Finish, and Appearance;

4.1.4 Significance of Numerical Limits;

4.1.5 Inspection;

4.1.6 Rejection and Rehearing;

4.1.7 Certification;

4.1.8 Mill Test Report; and

4.1.9 Packaging and Package Marking.

4.2 In addition, when a section with an identical title to those referenced in 4.1 above appears in this specification, such section may contain requirements which supersede those appearing in Specification SB-251. In case of conflict, this specification shall prevail.

5. Terminology, Specific

5.1 *Description of Terms Specific to This Specification:*

5.1.1 *capable of*— the test need not be performed by the producer of the material. However, should subsequent testing by the purchaser establish that the material does not meet these requirements, the material shall be subject to rejection.

5.1.2 *unaided eye* — without visual enhancement; however, corrective spectacles necessary to obtain normal vision shall be permitted.

TABLE 1
CHEMICAL REQUIREMENTS

Element	Composition, %, Copper UNS No. C10200[A]	C12000	C12200
Copper,[B] min.	99.95	99.90	99.9
Copper[B] + phosphorus, min.	...	...	...
Phosphorus	...	0.004–0.012	0.015–0.040
Arsenic	...	...	...

[A] Refer to Table 1, Chemical Composition, Grade 2, of Specification B 170 for impurity limits for Copper UNS No. C10200.
[B] Copper (including silver).

6. Material and Manufacture

6.1 *Material:*

6.1.1 The material of manufacture shall be billets, bars, or tube of Copper UNS No. C10200, C12000, or C12200, and shall be of such soundness as to be suitable for processing into the tubular products described.

6.2 *Manufacture:*

6.2.1 The tube shall be manufactured by such hot and cold working processes as to produce a homogeneous, uniform wrought structure in the finished product. It shall be cold drawn to the finished size and wall thickness. When cold drawn temper is required, the final drawing operation shall be such as to meet the specified temper. When annealed temper is required, the tube shall be annealed subsequent to the final cold draw.

7. Chemical Composition

7.1 The material shall conform to the requirements in Table 1 for the specified Copper UNS No. designation.

7.1.1 These specification limits do not preclude the presence of other elements. Limits may be established and analysis required for unnamed elements by agreement between the manufacturer or supplier and the purchaser.

8. Temper

8.1 The requirements and size availability of tube in the cold drawn tempers H55, H58, and H80, as defined in Practice B 601, are specified in Table 2.

8.1.1 Rectangular, including square, tube shall normally be supplied only in H58 temper; however, tube in H55 or H80 temper may be supplied as agreed upon between the manufacturer and the purchaser.

8.1.1.1 For any combination of diameter and wall thickness not listed under H80 temper, the requirements specified for H58 temper shall apply.

TABLE 2
MECHANICAL PROPERTY REQUIREMENTS OF DRAWN-TEMPER AND ANNEALED-TEMPER TUBE

Temper Designation		Outside Dia., or Major Distance Between Outside Parallel Surfaces, in.	Wall Thickness, in.	Rockwell Hardness		Average Grain Size, mm	Tensile Strength, ksi[B]	Yield Strength[A] min., ksi[B]
Standard	Former			Scale	Hardness			
H55	Light-drawn[C]	All	All	30T[D]	30 to 60		36–47	30
H58	Drawn (general purpose)	All	All	30T[D]	30 min.		36 min.	30
H80	Hard-drawn[C]	Up to 4	0.020 to 0.250, incl	30T[D]	55 min.		45 min.	40
060	Soft anneal	All	0.015 to 0.035	15T[E]	60 max.	0.040 min.	30 min.	9[F]
			0.035 and over	F[E]	50 max.	0.040 min.	30 min.	9[F]
050	Light anneal	All	0.015 to 0.035	15T[E]	65 max.	0.040 max.	30 min.	9[F]
			0.035 and over	F[E]	55 max.	0.040 max.	30 min.	9[F]

[A] Yield strength to be determined at 0.5% extension under load.
[B] ksi = 1000 psi.
[C] Light-drawn and hard-drawn tempers are normally available in round tubes only.
[D] Rockwell hardness values shall apply only to tubes having a wall thickness of 0.020 in. or over, to round tubes having an inside diameter of $^5/_{16}$ in. or over, and to rectangular including square tubes having an inside major distance between parallel surfaces of $^3/_{16}$ in. or over. Rockwell hardness tests shall be made on the inside surface of the tube. When suitable equipment is not available for determining the specified Rockwell hardness, other Rockwell scales and values may be specified to agreement between purchaser and supplier.
[E] Rockwell hardness values shall apply only to tubes having a wall thickness of 0.015 in. or over, to round tubes having an inside diameter of $^5/_{16}$ in. or over, and to rectangular including square tubes having an inside major distance between parallel sufaces of $^3/_{16}$ in. or over. For all other tube no Rockwell values shall apply. Rockwell hardness tests shall be made on the inside surface of the tube. When suitable equipment is not available for determining the specified Rockwell hardness, other Rockwell scales and values may be specified subject to agreement between purchaser and supplier.
[F] Light straightening operation is permitted.

8.2 The requirements and size availability of tube in the annealed tempers O50 and O60, as defined in Practice B 601, are specified in Table 2.

NOTE 1 — The purchaser should confer with the manufacturer or supplier for the availability of product in a specific temper.

NOTE 2 — Refer to Appendix X1 for recommended applications based on temper.

9. Grain Size Requirements

9.1 Tube in the annealed temper shall conform to the grain size specified in Table 2.

10. Physical Property Requirements

10.1 *Electrical Resistivity:*

10.1.1 When specified in the contract or purchase order, tube ordered for electrical conductor application produced from Copper UNS No. C10200 or C12000 shall have an electrical mass resistivity, ohm · g/m^2, not to exceed the following limit for the specified copper and temper when tested in accordance with Test Method B 193:

Temper	Copper UNS No. C10200	Copper UNS No. C12000
O60, O50	0.15328	0.17031
H55, H58, H80	0.15737	0.17418

NOTE 3 — Refer to Appendix X2 for the International Annealed Copper Standard (IACS) electrical conductivity equivalents.

11. Mechanical Property Requirements

11.1 *Tensile and Yield Strength:*

11.1.1 The tube shall conform to the requirements of Table 2 for the specified temper and wall thickness.

11.1.2 For any combination of diameter and wall thickness not listed under H80, the requirements for H58 shall apply.

11.2 *Rockwell Hardness:*

11.2.1 The tube shall conform to the requirements of Table 2 for the specified temper and wall thickness.

11.2.1.1 The Rockwell Hardness values for tube in the H55, H58, and H80 tempers shall apply only to the following:

(a) Tubes having a wall thickness of 0.020 in. and over;

(b) Round tubes having an inside diameter of $^{5}/_{16}$ in. and over;

(c) Rectangular and square tubes having major distances between parallel surfaces of $^{3}/_{16}$ in. and over.

11.2.1.2 The Rockwell Hardness values for tube in the O60 and O50 tempers shall apply only to the following:

(a) Tubes having a wall thickness of 0.015 in. and over;

(b) Round tubes having an inside diameter of $^{5}/_{16}$ in. and over; and

(c) Rectangular and square tubes having inside major distances between parallel surfaces of $^{3}/_{16}$ in. and over.

11.3 *Straightening:*

11.3.1 Light straightening is permitted for tube in the O60 and O50 tempers.

12. Performance Requirements

12.1 *Expansion Test for Round Tube:*

12.1.1 When specified in the contract or purchase order, annealed tubes shall be capable of withstanding an expansion of the outside diameter of 40% for tube $^{3}/_{4}$ in. and under and 30% for tube over $^{3}/_{4}$ in. The tube shall show no cracking or rupture visible to the unaided eye.

13. Microscopical Examination

13.1 Tubes furnished in Copper UNS Nos. C10200 and C12000 shall be essentially free of cuprous oxide as determined by Procedure A of Test Methods B 577.

14. Hydrogen Embrittlement

14.1 When specified in the contract or purchase order, tubes produced in all designated copper material shall be capable of conforming to the requirements of Procedure B of Test Methods B 577.

15. Purchases for U.S. Government Agencies

15.1 When the contract or purchase order stipulates the purchase is for an agency of the U.S. government, the tubes furnished shall conform to the conditions specified in SB-251.

16. Nondestructive Test

16.1 The tubes may be tested in the drawn tempers or as drawn prior to the final-annealed temper unless otherwise agreed upon between the manufacturer and the purchaser.

16.2 *Electromagnetic (Eddy Current) Test:*

16.2.1 Each tube up to and including $3^{1}/_{8}$ in. outside diameter shall be subjected to test.

16.2.2 When tested in accordance with Practice E 243, tubes which do not actuate the signaling device of the testing unit shall be considered as conforming to the requirements of the test.

16.3 *Hydrostatic Pressure Test:*

16.3.1 When specified in the contract or purchase order, each tube shall be capable of withstanding an internal hydrostatic pressure sufficient to produce a fiber stress of 6000 psi without leakage. The tube need not be subjected to a pressure gage reading over 1000 psi unless specifically stipulated in the contract or purchase order.

16.4 *Pneumatic Pressure Test:*

16.4.1 When specified in the contract or purchase order, each tube shall be capable of withstanding an internal air pressure of 60 psi, minimum, for 5 s without leakage.

17. Dimensions, Mass, and Permissible Variations

17.1 The dimensions and tolerances for product furnished to this specification shall be as specified in the following tables and related sections of the current edition of Specification B 251:

17.1.1 *Wall Thickness Tolerances* — Refer to Tables 1 and 2.

17.1.2 *Tolerances for Diameter or Distance Between Parallel Surfaces* — Refer to Tables 3 and 4.

TABLE 3
COIL LENGTH TOLERANCES
(Specific Lengths)

Outside Dia. or Major Distance Between Parallel Surfaces, in.	Tolerances: in., All Plus, for Nominal Lengths in Feet	
	Up to 50, incl	Over 50 to 100, incl
Up to 2, incl	12	24

TABLE 4
COIL LENGTH TOLERANCES (MILL LENGTHS)
(Applicable only to full length pieces)

Tube Outside Diameter or Major Distance Between Parallel Surfaces, in.	Tolerances, %, for Nominal Lengths in Feet	
	Up to 100, incl	Over 100 to 2000, incl
Up to 1, incl	5[A] or 2 ft, whichever is greater	10[A]
Over 1 to 2, incl	5[A] or 2 ft, whichever is greater	No tolerances established

[A] Expressed to the nearest 1 ft.

TABLE 5
COIL SCHEDULE OF MILL LENGTHS WITH ENDS

Tube Outside Diameter or Major Distance Between Parallel Surfaces, in.	Nominal Length, ft	Shortest Permissible Length, % of Nominal Length	Max. Permissible Weights of Ends, % of Lot Weight
Up to 1, incl	Up to 100, incl	70[A]	10
Over 1 to 2, incl	Up to 100, incl	60[A]	20
Up to 1, incl	Over 100 to 2000, incl	50	50[B]

[A] Expressed to the nearest 1 ft.
[B] Short pieces may be included as follows: up to 10% of lot weight between 50 ft and one quarter of full length; and up to 40% between one quarter and full length.

17.1.3 *Length Tolerances* — Refer to Tables 5 and 6.

17.1.4 *Straightness Tolerance* — Refer to Table 7.

17.1.5 *Corner Radius for Rectangular Including Square Tube* — Refer to Table 8.

17.1.6 *Roundness, Squareness of Cut, and Twist Tolerances for Rectangular and Square Tubes* — Refer to titled sections.

17.2 *Length Tolerances for Tube in Coils* — Refer to Tables 3, 4, and 5 of SB-75.

18. Sampling

18.1 The lot size, portion size, and selection of sample portions shall be as follows:

18.1.1 *Lot Size* — An inspection lot shall be 10,000 lb or fraction thereof.

18.1.2 *Portion Size* — Sample pieces shall be selected to be represented of the lot as follows:

Number of Pieces in Lot	Number of Portions to be Taken[A]
1 to 50	1
51 to 200	2
201 to 1500	3

[A] Each test portion shall be taken from a separate tube.

18.2 *Chemical Composition:*

18.2.1 The composite sample shall be taken in approximate equal weights from each portion piece selected in 18.1.2 and in accordance with Practice E 255. The minimum weight of the composite shall be 150 grams.

18.2.2 The manufacturer shall have the option of sampling at the time castings are poured or taken from the semi-finished product. The number of samples taken during the course of manufacture shall be as follows:

18.2.2.1 When sampled at the time castings are poured, at least two samples shall be taken, one after the start and one near the end of the pour, for each group of castings poured simultaneously from the same source of molten metal.

18.2.2.2 When samples are taken from the semi-finished product, a sample shall be taken to represent each 10,000 lb or fraction thereof, except that not more than one sample per piece shall be required.

18.2.2.3 When composition is determined during the course of manufacture, sampling and analyses of the finished product is not required.

18.3 *Other Tests:*

18.3.1 Specimens for all other tests shall be taken from two of the sample portions taken in 18.1.2. In the

event only one sample portion is taken, all specimens shall be taken from the portion selected.

19. Number of Tests and Retests

19.1 *Tests:*

19.1.1 *Chemical Composition* — Shall be determined as the arithmetic mean of results from at least two replicate determinations for each specified element.

19.1.2 *Grain Size, Electrical Resistivity, Tensile and Yield Strength, and Rockwell Hardness* — Shall be reported as the average of results from two test specimens and each specimen must conform to specification requirements.

19.1.3 *Other Tests* — At least two specimens shall be prepared for each of the other tests and each must conform to test requirements.

19.2 *Retests:*

19.2.1 When requested by the manufacturer or supplier, a retest shall be permitted when test results obtained by the purchaser fail to conform with the product specification requirement(s).

19.2.2 Retesting shall be as directed in this specification for the initial test except for the number of test specimens which shall be twice that normally required for the test.

19.2.3 Test results for all specimens shall conform to this specification's requirement(s) in retest and failure to conform shall be cause for lot rejection.

20. Specimen Preparation

20.1 *Chemical Analysis:*

20.1.1 Preparation of the analytical specimens shall be the responsibility of the reporting laboratory.

20.2 *Tensile and Yield Strength Test:*

20.2.1 The test specimens shall be of the full section of the tube and shall conform with the requirements of the test specimen section of Test Methods E 8, unless the limitation of the testing machine precludes the use of such specimen, in which case test specimen conforming to Type No. 1 of Fig. 13 in Test Methods E 8 shall be used.

20.3 *Rockwell Hardness:*

20.3.1 The test specimen shall be of a size and shape to permit testing by the available test equipment.

20.3.2 The surface of the test specimen shall be sufficiently flat and smooth so as to permit the accurate determination of hardness.

20.3.3 The test specimen shall be free from scale and foreign matter and care shall be taken to avoid any change in condition, for example, heating or cold working.

20.4 *Grain Size:*

20.4.1 Test specimens shall be prepared in accordance with the appropriate procedure in Methods E 3.

20.5 *Electrical Resistivity:*

20.5.1 The test specimen shall be full size and shall be the full cross-section of the material it represents when possible.

20.5.2 When the test specimen is taken from material in bulk, care shall be taken that the properties are not appreciably altered in the preparation.

NOTE 4 — Plastic deformation may work-harden a material and tend to raise its resistivity, while heating tends to anneal the material with a subsequent reduction in resistivity.

20.5.2.1 When necessary, products are to be rolled or cold drawn to a wire appoximately 0.080 in. in diameter (12 gage AWG) and of a convenient length. At least two specimens of a length sufficient to accommodate the testing equipment shall be cut from one end of the wire and annealed at approximately 935° ±10°F for 30 min in an inert atmosphere and rapidly cooled to ambient temperature without undue exposure to air.

20.6 *Expansion (Pin) Test:*

20.6.1 Test specimens shall conform to the requirements of the Specimen Preparation section of Test Method B 153.

20.7 *Microscopical Examination:*

20.7.1 The test specimen shall be prepared in accordance with Procedure A of Test Methods B 577 and the specimen surface shall approximate a radial longitudinal section of round tube or a longitudinal section of rectangular and square tube perpendicular to, and bisecting, the major dimensional surface.

20.8 *Hydrogen Embrittlement:*

20.8.1 The test specimen shall conform to the appropriate requirements of Procedure B of Test Methods B 577.

21. Test Methods

21.1 *Chemical Composition* — The copper composition shall be determined, in case of disagreement, as follows:

Element	Method
Copper	E 53
Phosphorus	E 62
Arsenic	E 62

21.1.1 The test methods for the determination of composition for Copper C10200 shall be as described in Annex A1 of Specification B 170.

21.1.2 Test method(s) for the determination of element(s) required by contractual or purchase order agreement shall be as agreed upon by the manufacturer and the purchaser.

21.2 The tubes furnished shall conform with the physical and mechanical properties and other requirements of this specification when tested or examined in accordance with the following appropriate test method or practice:

Test	Test Method
Tensile srength	E 8
Yield strength	E 8
Rockwell hardness	E 18
Grain size	E 112
Electrical resistivity	B 193
Expansion (pin test)	B 153
Electromagnetic examination (eddy current)	E 243
Microscopical examination (Procedure A)	B 577
Hydrogen embrittlement (Procedure B)	B 577
Hydrostatic pressure	Section 21.2.9
Pneumatic pressure	Section 21.2.10

21.2.1 *Tensile strength* shall be determined in accordance with Test Methods E 8.

21.2.1.1 Whenever test results are obtained from both full size and machined specimens and they differ, the test results from the full size specimens shall prevail.

21.2.2 *Yield strength* shall be determined at 0.5% extension-under-load.

21.2.3 *Rockwell hardness* shall be determined on the inside surface of the tube and a minimum of three readings shall be taken on each specimen, each at a different location.

21.2.3.1 When suitable equipment is not available for determining the specified Rockwell hardness, other Rockwell scales and values may be specified by agreement between the manufacturer and the purchaser.

21.2.4 *Grain size* shall be determined, in case of dispute, by the intercept method.

21.2.5 *Electrical revistivity* — the limit of measurement uncertainty shall be ±0.30% as a process control method and ±0.15% as an umpire method.

21.2.6 *Microscopical examination* — cuprous oxide content shall be determined in accordance with Procedure A, or in case of dispute, Procedure C, Closed Bend test, of Test Methods B 577 shall be followed.

21.2.7 *Hydrogen Embrittlement* — Procedure B shall be followed, or, in case of dispute, Procedure C, Closed Bend Test, of Test Methods B 577 shall be followed.

21.2.8 *Electromagnetic (Eddy Current) Test* — Each tube up to and including $3\frac{1}{8}$ in. outside diameter shall be subjected to an eddy-current test. Testing shall follow the procedures in Practice E 243. Tubes shall be passed through an eddy-current test unit adjusted to provide information on the suitability of the tube for the intended application.

21.2.8.1 Either notch depth or drilled hole standards shall be used.

(a) Notch depth standards, rounded to the nearest 0.001 in. shall be 22% of the wall thickness. The notch depth tolerance shall be ±0.0005 in.

(b) Drilled holes shall be drilled radially through the wall using a suitable drill jig that has a bushing to guide the drill, care being taken to avoid distortion of the tube while drilling. The diameter of the drilled hole shall be in accordance with the following and shall not vary by more than +0.001, −0.000 in. of the hole diameter specified.

Tube Outside Dia., in.	Dia. of Drilled Holes, in.	Drill Number
$\frac{1}{4}$ to $\frac{3}{4}$, incl	0.025	72
Over $\frac{3}{4}$ to 1, incl	0.031	68
Over 1 to $1\frac{1}{4}$, incl	0.036	64
Over $1\frac{1}{4}$ to $1\frac{1}{2}$, incl	0.042	58
Over $1\frac{1}{2}$ to $1\frac{3}{4}$, incl	0.046	56
Over $1\frac{3}{4}$ to 2, incl	0.052	55

21.2.8.2 Alternatively, at the option of the manufacturer, using speed insensitive eddy-current units that are equipped so that a fraction of the maximum imbalance signal can be selected, the following percent maximum imbalance signals may be used:

Standard Tube Size, in.	Maximum Percent Imbalance Signal Magnitude
Up to $\frac{3}{8}$, incl	0.2
$\frac{1}{2}$ to 2, incl	0.3
Over 2 to 3, incl	0.4

21.2.8.3 Tubes that do not activate the signalling device of the eddy-current tester shall be considered as conforming to the requirements of this test. Tubes with discontinuities indicated by the testing unit may, at the option of the manufacturer, be reexamined or retested to determine whether the discontinuity is cause for rejection. Signals that are found to have been caused by minor mechanical damage, soil, or moisture, shall not be cause for rejection of the tubes provided the tube dimensions are still within prescribed limits and the tube is suitable for its intended application.

21.2.9 *Hydrostatic test* — The internal hydrostatic pressure necessary to produce the required fiber stress shall be determined by the following equation for thin hollow cylinders under tension.

$$P = 2St/(D - 0.8t) \quad (1)$$

where

P = hydrostatic pressure, psi (or MPa)
t = thickness of tube wall, in. (or mm)
D = outside diameter of the tube, in. (or mm)
S = allowable fiber stress of the material, psi (MPa)

21.2.9.1 The tube need not be tested at a pressure gage reading over 1000 psi unless so specified.

21.2.10 *Pneumatic test* — The test method shall permit easy visual detection of leakage, such as having the material under water or by the pressure differential method.

22. Certification

22.1 Certification is mandatory when product is ordered for ASME Boiler and Pressure Vessel Code applications.

23. Keywords

23.1 seamless copper tube; seamless tube; tube

APPENDIXES

(Nonmandatory Information)

X1. RECOMMENDED APPLICATIONS

X1.1 Tube in the H55 temper is recommended when a tube of some stiffness is required yet capable of being bent when necessary.

X1.2 Tube in the H58 temper is recommended for general applications where there is no specific need for high strength or bending qualities.

X1.3 Tube in the H80 temper is recommended for applications where there is a need for a tube as strong as technically feasible for the size indicated.

X2. INTERNATIONAL ANNEALED COPPER STANDARD (ELECTRICAL CONDUCTIVITY EQUIVALENTS)

Electrical Resistivity ohm g/m^2	Conductivity Percent, %	Electrical Resistivity ohm g/m^2	Conductivity Percent, %
0.15176	101.00	0.15940	96.16
0.15328	100.00	0.17031	90
0.15614	98.16	0.17418	88
0.15737	97.40		

SPECIFICATION FOR COPPER-SILICON ALLOY PLATE, SHEET, STRIP, AND ROLLED BAR FOR GENERAL PURPOSES AND PRESSURE VESSELS

SB-96

(Identical with ASTM Specification B 96-93 for the alloy and temper covered, except for the deletion of supplementary requirements for government procurement. Certification has been made mandatory.)

1. Scope

1.1 This specification covers copper-silicon alloy plate, sheet, strip, and rolled bar commonly used for drawing, forming, stamping, and bending. The following alloy is covered:

Copper Alloy UNS No.	Nominal Silicon, %
C65500	3.3

NOTE — A complete metric comparison to Specification B 96 has been developed — B 96M; therefore, no metric equivalents are presented in this specification.

2. Reference Documents

2.1 The following documents of the issue in effect on date of material purchase form a part of this specification to the extent referenced herein:

2.1.1 *ASTM Standards:*

B 601 Recommended Practice for Temper Designations for Copper and Copper Alloys — Wrought and Cast

E 527 — J1086 Practice for Numbering Metals and Alloys (UNS)

2.1.2 *ASME Standard:*

SB-248 Specification for General Requirements for Wrought Copper and Copper-Alloy Plate, Sheet, Strip, and Rolled Bar

3. Ordering Information

3.1 Orders for material under this specification shall include the following information:

3.1.1 Alloy (Section 6),

3.1.2 Temper (Section 8),

3.1.3 Dimensions: Thickness, Width and Length (9.2, 9.3, and 9.4),

3.1.4 Finish (Section 10),

3.1.5 Type of edge, if required: slit, sheared, sawed, square corners, rounded corners, rounded edges, or full rounded edges (7.7),

3.1.6 How furnished (straight lengths or coils),

3.1.7 Weight (Section 7.6),

3.1.8 Mill test, if required (Section 19),

3.1.9 Certification (Section 18),

3.1.10 Product identification (Section 21)

3.1.11 Specification number and date,

3.1.12 Special test or exceptions, if any, and

3.1.13 Whether 0.2% yield strength is required.

4. General Requirements

4.1 Material furnished under this specification shall conform to the applicable requirements of the current edition of Specification SB-248.

5. Materials and Manufacture

5.1 Refer to the current edition of Specification SB-248.

6. Chemical Composition

6.1 The materials shall conform to the compositions prescribed in Table 1.

TABLE 1
CHEMICAL REQUIREMENTS

Element	Copper Alloy UNS No. C65500 — Composition, %
Copper (incl Silver)	remainder
Silicon	2.8–3.8
Manganese	0.50–1.3
Zinc, max	1.5
Iron, max	0.8
Nickel, max	0.6
Lead, max	0.05

6.2 These specification limits do not preclude the presence of other elements. Limits for unnamed elements may be established by agreement between manufacturer or supplier and purchaser.

6.3 Copper may be taken as the difference between the sum of all the elements analyzed and 100%. When all the elements in Table 1 are analyzed, their sum shall be 99.5% min.

7. Mechanical Properties

7.1 *Tensile Requirements* — The tension test shall be the standard test, and acceptance or rejection shall depend only on the tensile properties, which shall conform to the requirements prescribed in Table 2. Tension test specimens shall be taken so the longitudinal axis of the specimen is parallel to the direction of rolling.

7.2 *Rockwell Hardness* — Since Rockwell hardness tests offer a quick and convenient method of checking copper-silicon alloy for general conformity to the requirements for tensile strength and grain size similarly for annealed tempers, the approximate Rockwell hardness value and the approximate grain size for annealed tempers are given in Table 2 for general information and assistance in testing.

7.3 *Grain Size* — The grain sizes given in Table 2 for annealed tempers are approximate and for information only.

8. Temper

Temper shall be O61 as described in Pratice B 601.

9. Dimensions, Weights, and Permissible Variations

9.1 The dimensions and tolerances for material covered by this specification shall be as prescribed in the current edition of SB-248, with particular reference to Section 5 and the following tables of that specification.

9.2 *Thickness* — See 5.2; Table 2.

9.2.1 For Pressure Vessel Code Application — The thickness of any plate or sheet shall not be more than 0.01 in. under the thickness specified.

9.3 *Width:*

9.3.1 *Slit Metal and Slit Metal with Rolled Edges* — See 5.3, Table 3.

9.3.2 *Square-Sheared Metal* — See 5.3, Table 4.

9.3.3 *Sawed Metal* — See 5.3, Table 5.

9.4 *Length:*

9.4.1 *Specific and Stock Lengths with and without Ends* — See 5.4, Table 6.

9.4.2 *Schedule of Lengths (Specific and Stock) with Ends* — See 5.4, Table 7.

TABLE 2
TENSILE STRENGTH REQUIREMENTS AND APPROXIMATE ROCKWELL HARDNESS AND GRAIN SIZE VALUES FOR PRESSURE VESSEL APPLICATIONS

Temper Designation		Tensile Strength, ksi[A]	Yield Strength at 0.5% Extension Under Load, min, ksi	Yield Strength[E] at 0.2% Offset, min, ksi	Elongation, min, %[C]	Approximate Rockwell F Hardness	Approximate Grain Size
Standard[B]	Former						
Copper Alloy UNS No. C65500							
061	Annealed	50–67	18	18	40	72–92	0.110[D]

[A] ksi = 1000 psi.
[B] Standard designations defined in Practice B 601.
[C] Elongation in 2 in.
[D] No minimum grain size requirement is specified, but all annealed material shall be fully recrystallized.
[E] See 3.1.11.

TABLE 3
LOT WEIGHT TOLERANCES IN PERCENTAGE OF THEORETICAL WEIGHT FOR PRESSURE VESSEL APPLICATIONS — ALL PLUS

Thickness, in.	Permissible Excess in Average Weight of Lots, Expressed in Percentage of Normal Weight					
	48 in. and Under in Width	Over 48 to 60 in. in Width	Over 60 to 72 in. in Width	Over 72 to 96 in. in Width	Over 96 to 120 in. in Width	Over 120 to 132 in. incl, in Width
1/8 to 3/16, incl	6.5	8	9	11	...	...
Over 3/16 to 1/4, incl	6.5	8	9	11	12	...
Over 1/4 to 5/16, incl	6.5	7.75	8.75	11	12	13
Over 5/16 to 3/8, incl	6.25	7.5	8.5	11	12	13
Over 3/8 to 7/16, incl	6	7.25	8.25	11	12	13
Over 7/16 to 1/2, incl	6	7	8	10	11	12
Over 1/2 to 5/8, incl	5.75	6.5	7.5	9	10	11
Over 5/8 to 3/4, incl	5.5	6	7	8	9	10
Over 3/4 to 1, incl	5	5	6.25	7	8	9
Over 1 to 2, incl	3.5	4	5	6	7	8

9.4.3 *Length Tolerances for Square-Sheared Metal* — See 5.4, Table 8.

9.4.4 *Length Tolerances for Sawed Metal* — See 5.4, Table 9.

9.5 *Straightness:*

9.5.1 *Slit Metal or Slit Metal Either Straightened or Edge-Rolled* — See 5.5, Table 10.

9.5.2 *Square-Sheared Metal* — See 5.5, Table 11.

9.5.3 *Sawed Metal* — See 5.5, Table 12.

9.6 *Weight* — Hot-rolled sheet and plate. See 5.7, Table 13.

9.6.1 The lot weight tolerances are shown in Table 4 of SB-248.

9.7 *Edges* — See 5.6.

9.7.1 *Square Edges* — See 5.6.1, Table 14.

9.7.2 *Rounded Corners* — See 5.6.2, Table 15.

9.7.3 *Rounded Edges* — See 5.6.3, Table 16.

9.7.4 *Full-Rounded Edges* — See 5.6.4, Table 17.

10. Workmanship, Finish, and Appearance

10.1 For workmanship and appearance refer to the current edition of Specification SB-248.

10.2 *Finish:* The material is regularly supplied in the following finishes:

10.2.1 *Black* — After hot rolling retains all of the oxides.

10.2.2 *Plain Pickled* — Sulfuric acid pickle only, brick red oxide. Has cuprous and silicon oxides still adherent.

10.2.3 *Specially Cleaned* — Commercially free of all oxides. Has the golden color of the alloy.

10.2.4 *Sand Blasted* — Commercially free of all oxides. Has a dull gray color.

11. Sampling

11.1 Refer to the current edition of Specification SB-248.

12. Number of Tests and Retests

12.1 Refer to the current edition of Specification SB-248.

13. Specimen Preparation

13.1 Refer to the current edition of Specification SB-248 for the preparation of the appropriate test specimen.

14. Test Methods

14.1 The chemical composition shall, in case of disagreement, be determined as follows:

Element	Test Method
Copper	E 478
Silicon	E 54 (Perchloric acid)
Manganese	E 75
Tin	E 478
Chromium	E 118
Zinc	E 478
Iron	E 478
Nickel	E 478
Lead	E 478

14.2 *Mechanical Properties (Tensile, Rockwell, and Grain)* — Refer to the appropriate test method in Specification SB-248.

15. Significance of Numerical Limits

15.1 Refer to the current edition of Specification SB-248.

16. Inspection

16.1 Refer to the current edition of Specification SB-248.

17. Rejection and Rehearing

17.1 Refer to the current edition of Specification SB-248.

18. Certification

18.1 Refer to the current edition of Specification SB-248.

19. Mill Test Report

19.1 Refer to the current edition of Specification SB-248.

20. Packaging and Package Marking

20.1 Refer to the current edition of Specification SB-248.

21. Product Identification

21.1 The name or trademark of the manufacturer's identification number shall be legibly stamped or stenciled on each finished plate and sheet in two places not less than 12 in. from the edges. If the plate and sheet are too small to locate the marking as above, the marking may be placed near the center of the plate and sheet. In the case of butt straps, the marking may be placed 12 in. from the end. The plate number and type shall be legibly stamped on each plate and on each test specimen.

22. Keywords

22.1 copper-silicon alloy bar; copper-silicon alloy plate; copper-silicon alloy pressure vessels; copper-silicon alloy sheet; copper-silicon alloy strip; UNS C65500

SPECIFICATION FOR COPPER-SILICON ALLOY ROD, BAR, AND SHAPES

SB-98/SB-98M

(Identical with ASTM Specification B 98/98M-98 for the alloys and tempers covered except that Section 8.1.1 was removed so that tensile testing rather than Rockwell hardness testing is required to show conformance with mechanical properties. Certification has been made mandatory.)

1. Scope

1.1 This specification establishes requirements for copper-silicon rod, bar, and shapes for UNS Alloys C65100 (Low Silicon Bronze B), C65500 (High Silicon Bronze A), and C66100.

NOTE 1 — Material for hot forging is covered by Specification B 124.

1.2 The values stated in inch-pound units or SI units are to be regarded separately as standard. Within the text, SI units are shown in brackets. The values in each system are not exact equivalents; therefore, each system shall be used independently of the other. Combining values from the two systems may result in nonconformance with the specification.

2. Referenced Documents

2.1 The following documents of the issue in effect on date of material purchase form a part of this specification to the extent referenced herein:

2.1.1 *ASTM Standards:*

B 124 Specification for Copper and Copper Alloy Forging Rod, Bar and Shapes

B 249 Specification for General Requirements for Wrought Copper and Copper-Alloy Rod, Bar, Shapes and Forgings

B 249M Specification for General Requirements for Wrought Copper and Copper-Alloy Rod, Bar, Shapes and Forgings [Metric]

B 601 Practice for Temper Designations for Copper and Copper Alloys—Wrought and Cast

E 8 Test Methods for Tension Testing of Metallic Materials

E 8M Test Methods for Tension Testing of Metallic Materials [Metric]

E 18 Test Methods for Rockwell Hardness and Rockwell Superficial Hardness of Metallic Materials

E 54 Test Methods for Chemical Analysis of Special Brasses and Bronzes

E 62 Test Methods for Chemical Analysis of Copper and Copper Alloys (Photometric Method)

E 478 Test Methods for Chemical Analysis of Copper Alloys

2.1.2 *ASME Standard:*

SB-249 Specification for General Requirements for Wrought Copper and Copper-Alloy Rod, Bar, Shapes, and Forgings

3. General Requirements

3.1 The following sections of Specification B 249, B 249M, or SB-249 constitute a part of this specification:

3.1.1 Terminology,

3.1.2 Materials and Manufacture,

3.1.3 Workmanship, Finish, and Appearance,

3.1.4 Sampling,

3.1.5 Number of Tests and Retests,

3.1.6 Specimen Preparation,

3.1.7 Test Methods,

3.1.8 Significance of Numerical Limits,

3.1.9 Inspection,

3.1.10 Rejection and Rehearing,

3.1.11 Certification,

3.1.12 Test Report (Mill),

3.1.13 Packaging and Package Marking, and

3.1.14 Supplemental Requirements.

3.2 In addition, when a section with a title identical to one of those referenced in 3.1 appears in this specification, it contains additional requirements that supplement those which appear in Specification B 249, B 249M, or SB-249.

4. Ordering Information

4.1 Orders for product under this specification should include the following information:

4.1.1 ASTM Designation and year of issue,

4.1.2 Copper Alloy UNS No. designation,

4.1.3 Temper designation,

4.1.4 Quantity; total weight or length, or number of pieces of each temper, form, or alloy

4.1.5 Dimensions; diameter or distance between parallel surfaces,

4.1.6 Type of edge; edge contours,

4.1.7 How furnished; specific lengths with or without ends, and

4.1.8 When material is purchased for agencies of the U.S. Government (see Specifications B 249 or B 249M).

4.2 The following option is available under this specification and should be specified in the contract or purchase order when required:

4.2.1 Mill Test Report (Specifications B 249 or B 249M).

4.3 Certification (Specifications B 249 or B 249M) is mandatory.

5. Material and Manufacture

5.1 The starting material shall be cast billets or rods of Copper Alloy UNS Numbers C65100, C65500, or C66100, and shall be of such soundness and structure as to enable them to be processed into the product specified in the contract or purchase order.

5.2 The product shall be manufactured by such hot-working, cold-working, straightening, and annealing processing as to produce a uniform wrought structure and obtain the required finish properties.

6. Chemical Composition

6.1 The product shall conform to the chemical requirements specified in Table 1 for the Copper Alloy UNS No. designated in the ordering information.

6.1.1 When all elements listed in Table 1 are determined for the designated alloy, the sum of results shall be 99.5% min.

6.1.2 Copper may be determined as the difference between the sum of results for all elements analyzed and 100%.

6.2 These composition limits do not preclude the presence of other elements. Limits may be established and analysis required for unnamed elements by agreement between the manufacturer and the purchaser.

7. Temper

7.1 Tempers, as defined in Practice B 601, available under this specification are O60 (soft anneal), H01 (quarter-hard), H02 (half-hard), H04 (hard), H06 (extra hard), M20 (as hot rolled), and M30 (as hot extruded).

7.2 Product of bars and shapes in the H06 (extra-hard) temper is normally not produced.

8. Mechanical Property Requirements

8.1 The product shall conform to the mechanical property requirements given in Tables 2 and 3 for the Copper Alloy UNS No. designation specified in the ordering information.

8.1.1 *Rockwell Hardness* — For the alloys and tempers listed, product 0.5 in. [12.7 mm] and over in diameter or distance between parallel surfaces shall conform with the requirements given in Table 3, when tested in accordance with Test Methods E 18.

8.1.2 *Tensile Strength* — The product shall conform with the requirements of Table 2 when tested in accordance with Test Methods E 8.

9. Dimensions, Mass, and Permissible Variations

9.1 Refer to the appropriate paragraphs in Specification B 249/B 249M with particular reference to the following tables:

9.2 *Diameter or Distance Between Parallel Surfaces:*

9.2.1 *Rod: Round, Hexagonal, Octagonal* — Refer to Table 1 for Alloy C65100 and to Table 2 for Alloys C65500 and C66100.

9.2.2 *Rod: Round M20 Temper* — Refer to Table 6.

9.2.3 *Rod: Round, Hexagonal, Octagonal, M30 Temper* — Refer to Table 5.

TABLE 1
CHEMICAL REQUIREMENTS

	Composition, % Maximum (Unless Shown as a Range or Minimum)		
	Copper Alloy UNS No.		
	C65100	C65500	C66100
Copper (includes silver)	96.0 min	94.8 min	94.0 min
Lead	0.05	0.05	0.20–0.8
Iron	0.8	0.8	0.25
Zinc	1.5	1.5	1.5
Aluminum	...	...	...
Manganese	0.7	0.50–1.3	1.5
Silicon	0.8–2.0	2.8–3.8	2.8–3.5
Nickel	...	0.6	...

9.2.4 *Bar: Rectangular and Square* — Refer to Tables 8 and 10 for Alloy C65100, and Tables 9 and 11 for Alloys C65500 and C66100.

9.2.5 *Bar: M30 Temper* — Refer to Table 5 for thickness and width tolerances.

9.3 *Shapes* — The dimensional tolerances for shapes shall be as agreed upon between the manufacturer and the purchaser, and shall be specified in the order.

9.4 *Length:*

9.4.1 *Rod, Bar, and Shapes* — Refer to Tables 13 and 15.

9.5 *Straightness:*

9.5.1 *Rod and Bar* — Refer to Table 16.

9.6 *Edge Contours:*

9.6.1 *Rod and Bar* — Refer to the section entitled "Edge Contours" and to Figs. 1, 2, and 3.

10. Test Methods

10.1 Chemical composition shall, in case of disagreement, be determined as follows:

Element	Test Methods
Copper	E 478
Lead	E 478, Atomic absorption
Manganese	E 62
Nickel	E 478, Photometric
Silicon	E 54, Perchloric acid dehydration
Zinc	E 478, Atomic absorption

10.1.1 Test Method(s) to be followed for the determination of elements required by contractual or purchase order agreement shall be as agreed upon between the supplier and purchaser.

10.2 Refer to Specification B 249 or B 249M for other appropriate test methods.

11. Certification

11.1 The manufacturer's certificate of compliance shall be furnished to the purchaser stating that samples representing each lot have been tested and inspected in accordance with this specification and the requirements have been met.

12. Keywords

12.1 copper — rod, bar, shapes; copper-silicon alloy; high silicon bronze A; low silicon bronze B; silicon bronze

TABLE 2a
TENSILE REQUIREMENTS

Temper Designation		Diameter or Distance Between Parallel Surfaces, in.	Tensile Strength, min, ksi	Yield Strength at 0.5% Extension Under Load, min, ksi	Elongation in 4 × Diameter or Thickness of Specimen min, %[A]
Standard	Former				
		Copper Alloy UNS No. C65100 Rods, Bars, and Shapes			
060	Soft anneal	All forms, all sizes	40	12	30
H02	Half-hard	Rods:			
		Up to ½ in., incl	55	20	11
		Over ½ to 2 in., incl	55	20	12
H04	Hard	Bars and shapes	[C]	[C]	[C]
		Rods:			
		Up to ½, incl	65	35	8
		Over ½ to 2, incl	65	35	10
		Bars and shapes	[C]	[C]	[C]
H06	Extra-hard[B]	Rods:			
		Up to ½ in., incl	85	55	6
		Over ½ to 1 in., incl	75	45	8
		Over 1 to 1½ in., incl	75	40	8
		Copper Alloy UNS Nos. C65500 and C66100 Bars[D]			
060	Soft anneal	All sizes	52	15	35
H04	Hard	Up to 1, incl	65	38	20
		Over 1 to 1½, incl	60	30	25
		Over 1½ to 3, incl	55	24	27
		Copper Alloy UNS Nos. C65500 and C66100 Rods, Square Bars, and Shapes			
060	Soft anneal	All forms, all sizes	52	15	35
H01	Quarter-hard	All forms, all sizes	55	24	25
H02	Half-hard	Rods and square bars:			
		Up to 2 in., incl	70	38	20
		Shapes	[C]	[C]	[C]
H04	Hard	Rods and square bars:			
		Up to ¼, incl	90	55	8
		Over ¼ to 1, incl	90	52	13
		Over 1 to 1½, incl	80	43	15
		Over 1½ to 3, incl	70	38	17
		Over 3—as agreed upon by manufacturer and purchaser			
		Shapes	[C]	[C]	[C]
H06	Extra-hard[B]	Rods: up to ½, incl	100	55	7

[A] In any case a minimum gage length of 1 in. shall be used.

[B] Bars and shapes are not produced in the H06 extra-hard temper.

[C] Tensile requirements for shapes of Copper Alloy UNS Nos. C65500 and C66100 and bars and shapes of the H02 and H04 tempers of Copper alloy UNS No. C65100 and all alloys and forms of M20 and M30 tempers shall be as agreed upon between the manufacturer and the purchaser at time of order.

[D] Rectangular sections having thickness less than the width.

TABLE 2b
TENSILE REQUIREMENTS

Temper Designation		Diameter or Distance	Tensile Strength	Yield Strength at 0.5% Extension Under Load,	Elongation,
Standard	Former	Between Parallel Surfaces, mm	min, MPa	min, MPa	min, %[A]
		Copper Alloy UNS No. C65100 Rods, Bars, and Shapes			
060	Soft anneal	All forms, all sizes	275	85	30
H02	Half-hard	Rods:			
		Up to 12.7, incl	380	140	11
		Over 12.7 to 50.8, incl	380	140	12
		Bars and shapes			[B]
H04	Hard	Rods:			
		Up to 12.7, incl	450	240	8
		Over 12.7 to 50.8, incl	450	240	10
		Bars and shapes	[B]	[B]	[B]
H06	Extra-hard[C]	Rods:			
		Up to 12.7, incl	585	380	6
		Over 12.7 to 25.4, incl	515	310	8
		Over 25.4 to 38.1, incl	515	275	8
		Copper Alloy UNS Nos. C65500 and C66100 Bars[D]			
060	Soft anneal	All sizes	360	105	35
H04	Hard	Up to 25.4, incl	450	260	20
		Over 25.4 to 38.1, incl	415	205	25
		Over 38.1 to 76.2, incl	380	165	27
		Copper Alloy UNS Nos. C65500 and C66100 Rods, Square Bars, and Shapes			
060	Soft anneal	All forms, all sizes	360	105	35
H01	Quarter-hard	All forms, all sizes	380	165	25
H02	Half-hard	Rods and square bars:			
		Up to 50.8, incl	485	260	20
		Shapes	[B]	[B]	[B]
H04	Hard	Rods and square bars:			
		Up to 6.35, incl	615	380	8
		Over 6.35 to 25.4, incl	615	360	13
		Over 25.4 to 38.1, incl	545	295	15
		Over 38.1 to 76.2, incl	485	260	17
		Over 76.2—as agreed upon between manufacturer and purchaser			
		Shapes	[B]	[B]	[B]
H06	Extra-hard[C]	Rods: up to 12.7, incl	690	380	7

[A] Elongation values are based on a gage length of 5.65 times the square root of the area for dimensions greater than 2.5 mm.

[B] Tensile requirements for shapes of Copper Alloy UNS Nos. C65500 and C66100 and bars and shapes of the H02 and H04 tempers of Copper Alloy UNS No. C65100 and all alloys and forms of M20 and M30 tempers shall be as agreed upon between the manufacturer and the purchaser at time of order.

[C] Bars and shapes are not produced in the H06 extra-hard temper.

[D] Rectangular sections having thickness less than the width.

TABLE 3
ROCKWELL HARDNESS REQUIREMENTS[A]

Temper Designation		Diameter or Distance Between Parallel Surfaces, in. (mm)	Rockwell B Hardness Determined on the Cross Section Midway Between Surface and Center
Standard	Former		
Copper Alloy UNS No. C65100 Rods, Bars, and Shapes			
H02	Half-hard	0.5 to 2.0 [12.7 to 50.8], incl	60–85
H04	Hard	0.5 to 2.0 [12.7 to 50.8], incl	65–90
H06	Extra-hard[B]	0.5 to 1.5 [12.7 to 38.1], incl.	75–95
Copper Alloy UNS Nos. C65500 and C66100 Bars[C]			
H04	Hard	0.5 to 3.0 [12.7 to 76.1], incl	60–95
Copper Alloy UNS Nos. C65500 and C66100 Rods, Square Bars, and Shapes			
H02	Half-hard	0.5 to 1.0 [12.7 to 25.4], incl	75–95
		over 1.0 to 1.5 [25.4 to 38.1], incl	75–95
		over 1.5 to 3.0 [38.1 to 50.8], incl	75–95
H04	Hard	0.5 to 1.0 [12.7 to 25.4], incl	85–100
		over 1.0 to 1.5 [25.4 to 38.1], incl	80–95
		over 1.5 to 3.0 [38.1 to 50.8], incl	75–95

[A] Rockwell hardnesses are not established for diameters less than 0.5 in. [12.7 mm].
[B] Bars and shapes are not produced in the H06 temper.
[C] Rectangular sections having thickness less than the width.

SPECIFICATION FOR ALUMINUM-ALLOY PERMANENT MOLD CASTINGS

SB-108

(Identical with ASTM Specification B 108-99 except that certification has been made mandatory, welding is in accordance with ASME, and editorial revisions have been made to Table 1.)

1. Scope

1.1 This specification covers aluminum-alloy permanent mold castings designated as shown in Table 1.

1.2 Alloy and temper designations are in accordance with ANSI H35.1. The equivalent unified numbering system alloy designations are in accordance with Practice E 527.

1.3 For acceptance criteria for inclusion of new aluminum and aluminum alloys and their properties in this specification, see Annex A1 and Annex A2.

1.4 The values stated in inch-pound units are to be regarded as the standard. The values in parentheses are for information only.

2. Referenced Documents

2.1 The following documents of the issue in effect on the date of casting purchase form a part of this specification to the extent referenced herein:

2.1.1 *ASTM Standards:*

B 179 Specification for Aluminum Alloys in Ingot Form for Castings From All Casting Processes

B 275 Practice for Codification of Certain Nonferrous Metals and Alloys, Cast and Wrought

B 557 Test Methods for Tension Testing Wrought and Cast Aluminum- and Magnesium-Alloy Products

B 597 Practice for Heat Treatment of Aluminum Alloys

B 660 Practices for Packaging/Packing of Aluminum and Magnesium Products

E 29 Practice for Using Significant Digits in Test Data to Determine Conformance With Specifications

E 34 Test Method for Chemical Analysis of Aluminum and Aluminum-Base Alloys

E 88 Practice for Sampling Nonferrous Metals and Alloys in Cast Form for Determination of Chemical Composition

E 94 Guide for Radiographic Testing

E 155 Reference Radiographs for Examination of Aluminum and Magnesium Castings

E 165 Test Method for Liquid Penetrant Examination

E 227 Test Method for Optical Emission Spectrometric Analysis of Aluminum and Aluminum Alloys by the Point-to-Plane Technique

E 527 Practice for Numbering Metals and Alloys (UNS)

E 607 Test Method for Optical Emission Spectrometric Analysis of Aluminum and Aluminum Alloys by the Point-to-Plane Technique, Nitrogen Atmosphere

E 716 Practices for Sampling Aluminum and Aluminum Alloys for Spectrochemical Analysis

E 1251 Test Method for Optical Emission Spectrometric Analysis of Aluminum and Aluminum Alloys by the Argon Atmosphere, Point-to-Plane, Unipolar Self-Initiating Capacitor Discharge

2.3 *ANSI Standard:*

H35.1 Alloy and Temper Designation Systems for Aluminum

2.4 *Military Standards:*

MIL-STD-129 Marking for Shipment and Storage

MIL-STD-276 Impregnation of Porous Nonferrous Metal Castings

MIL-STD-278 Welding and Allied Processes for Machinery for Ships

MIL-I-13857 Impregnation of Metal Castings

2.5 *Federal Standard:*

Fed. Std. No. 123 Marking for Shipment (Civil Agencies)

TABLE 1
CHEMICAL COMPOSITION LIMITS[A, B, C]

Alloy		Composition,%											Other Elements[E]	
ANSI[D]	UNS	Aluminum	Silicon	Iron	Copper	Manganese	Magnesium	Chromium	Nickel	Zinc	Tin	Titanium	Each	Total[F]
204.0	A02040	remainder	0.20	0.35	4.2–5.0	0.10	0.15–0.35	...	0.05	0.10	0.05	0.15–0.30	0.05	0.15
208.0	A02080	remainder	2.5–3.5	1.2	3.5–4.5	0.50	0.10	...	0.35	1.0	...	0.25	...	0.50
213.0	A02130	remainder	1.0–3.0	1.2	6.0–8.0	0.6	0.10	...	0.35	2.5	...	0.25	...	0.50
222.0	A02220	remainder	2.0	1.5	9.2–10.7	0.50	0.15–0.35	...	0.50	0.8	...	0.25	...	0.35
242.0	A02420	remainder	0.7	1.0	3.5–4.5	0.35	1.2–1.8	0.25	1.7–2.3	0.35	...	0.25	0.05	0.15
296.0	A02960	remainder	2.0–3.0	1.2	4.0–5.0	0.35	0.05	...	0.35	0.50	...	0.25	...	0.35
308.0	A03080	remainder	5.0–6.0	1.0	4.0–5.0	0.50	0.10	...	...	1.0	...	0.25	...	0.50
319.0	A03190	remainder	5.5–6.5	1.0	3.0–4.0	0.50	0.10	...	0.35	1.0	...	0.25	...	0.50
332.0[G]	A03320	remainder	8.5–10.5	1.2	2.0–4.0	0.50	0.50–1.5	...	0.50	1.0	...	0.25	...	0.50
333.0	A03330	remainder	8.0–10.0	1.0	3.0–4.0	0.50	0.05–0.50	...	0.50	1.0	...	0.25	...	0.50
336.0[G]	A03360	remainder	11.0–13.0	1.2	0.50–1.5	0.35	0.7–1.3	...	2.0–3.0	0.35	...	0.25	0.05	...
354.0	A03540	remainder	8.6–9.4	0.20	1.6–2.0	0.10	0.40–0.6	...	...	0.10	...	0.20	0.05	0.15
355.0	A03550	remainder	4.5–5.5	0.6[H]	1.0–1.5	0.50[H]	0.40–0.6	0.25	...	0.35	...	0.25	0.05	0.15
C355.0	A33550	remainder	4.5–5.5	0.20	1.0–1.5	0.10	0.40–0.6	...	...	0.10	...	0.20	0.05	0.15
356.0	A03560	remainder	6.5–7.5	0.6[H]	0.25	0.35[H]	0.20–0.45	...	...	0.35	...	0.25	0.05	0.15
A356.0	A13560	remainder	6.5–7.5	0.20	0.20	0.10	0.25–0.45	...	...	0.10	...	0.20	0.05	0.15
357.0	A03570	remainder	6.5–7.5	0.15	0.05	0.03	0.45–0.6	...	...	0.05	...	0.20	0.05	0.15
A357.0	A13570	remainder	6.5–7.5	0.20	0.20	0.10	0.40–0.7	...	...	0.10	...	0.04–0.20	0.05[I]	0.15
359.0	A03590	remainder	8.5–9.5	0.20	0.20	0.10	0.50–0.7	...	...	0.10	...	0.20	0.05	0.15
443.0	A04430	remainder	4.5–6.0	0.8	0.6	0.50	0.05	0.25	...	0.50	...	0.25	...	0.35
B443.0	A24430	remainder	4.5–6.0	0.8	0.15	0.35	0.05	...	...	0.35	...	0.25	0.05	0.15
A444.0	A14440	remainder	6.5–7.5	0.20	0.10	0.10	0.05	...	...	0.10	...	0.20	0.05	0.15
513.0[G]	A05130	remainder	0.30	0.40	0.10	0.30	3.5–4.5	...	...	1.4–2.2	...	0.20	0.05	0.15
535.0	A05350	remainder	0.15	0.15	0.05	0.10–0.25	6.2–7.5	...	...	...	...	0.10–0.25	0.05[J]	0.15
705.0	A07050	remainder	0.20	0.8	0.20	0.40–0.6	1.4–1.8	0.20–0.40	...	2.7–3.3	...	0.25	0.05	0.15
707.0	A07070	remainder	0.20	0.8	0.20	0.40–0.6	1.8–2.4	0.20–0.40	...	4.0–4.5	...	0.25	0.05	0.15
711.0[G]	A07110	remainder	0.30	0.7–1.4	0.35–0.65	0.05	0.25–0.45	...	...	6.0–7.0	...	0.20	0.05	0.15
713.0	A07130	remainder	0.25	1.1	0.40–1.0	0.6	0.20–0.50	0.35	0.15	7.0–8.0	...	0.25	0.10	0.25
850.0	A08500	remainder	0.7	0.7	0.7–1.3	0.10	0.10	...	0.7–1.3	...	5.5–7.0	0.20	...	0.30
851.0[G]	A08510	remainder	2.0–3.0	0.7	0.7–1.3	0.10	0.10	...	0.3–0.7	...	5.5–7.0	0.20	...	0.30
852.0[G]	A08520	remainder	0.40	0.7	1.7–2.3	0.10	0.6–0.9	...	0.9–1.5	...	5.5–7.0	0.20	...	0.30

(continued)

TABLE 1
CHEMICAL COMPOSITION LIMITS[A, B, C] (CONT'D)

[A] When single units are shown, these indicate the maximum amounts permitted.
[B] Analysis shall be made for the elements for which limits are shown in this table.
[C] The following applies to all specified limits in this table: For purposes of determining conformance to these limits, an observed value or a calculated value obtained from analysis shall be rounded to the nearest unit in the last right-hand place of figures used in expressing the specified limit in accordance with the rounding method of Practice E 29.
[D] ASTM alloy designations are recorded in Practice B 275.
[E] *Others* includes listed elements for which no specific limits are shown as well as unlisted metallic elements. The producer may analyze samples for trace elements not specified in the specification. However, such analysis is not required and may not cover all metallic *Others* elements. Should any analysis by the producer or the purchaser establish that an *Others* element exceeds the limit of *Each* or that the aggregate of several *Others* elements exceeds the limit of *Total*, the material shall be considered nonconforming.
[F] *Other Elements — Total* shall be the sum of unspecified metallic elements of 0.010% or more, rounded to the second decimal before determining the sum.
[G] 336.0 formerly A332.0, 332.0 formerly F322.0, 513.0 formerly A514.0, 711.0 formerly C712.0, 851.0 formerly A850.0, 852.0 formely B850.0.
[H] If the iron content exceeds 0.45%, manganese content shall not be less than one half of the iron.
[I] Beryllium 0.04–0.07.
[J] Beryllium 0.003–0.007, boron 0.005 max.

3. Terminology

3.1 *Definitions:*

3.1.1 *permanent mold casting* — a metal object produced by introducing molten metal by gravity or low pressure into a mold constructed of durable material, usually iron or steel, and allowing it to solidify.

3.1.2 *semi-permanent mold casting* — a permanent mold casting which is made using an expendable core such as sand.

4. Ordering Information

4.1 Orders for material under this specification shall include the following information:

4.1.1 This specification designation (which includes the number, the year, and the revision letter, if applicable),

4.1.2 Alloy (see Section 7 and Table 1),

4.1.3 Temper (See Section 11 and Table 2),

4.1.4 Applicable drawing or part number,

4.1.5 The quantity in either pieces or pounds,

4.2 Additionally, orders for material to this specification shall include the following information when required by the purchaser:

4.2.1 Whether yield strength tests are required (see 11.1 and Table 2, Footnote F),

4.2.2 Whether castings or test bars, or both, are to be artificially aged for alloys 705.0-T5, 707.0-T5, and 713.0-T5 (see 11.3),

4.2.3 Whether test specimens cut from castings are required in addition to or instead of separately cast specimens (see Sections 11 and 15, and 13.2),

4.2.4 Whether repairs are permissible (see Section 18),

4.2.5 Whether inspection is required at the producer's works (see Section 19),

4.2.6 Certification is required (see Section 23),

4.2.7 Whether surface requirements will be checked visually or by observational standards where such standards are established (see 20.1),

4.2.8 Whether liquid penetrant inspection is required (see 20.2),

4.2.9 Whether radiographic inspection is required (see 20.3),

4.2.10 Whether foundry control is required (see 10.2), and

4.2.11 Whether the material shall be packaged, or marked, or both, in accordance with Practices B 660, MIL-STD-129, and Fed. Std. No. 123 (see 24.4).

5. Responsibility for Quality Assurance

5.1 Unless otherwise specified in the contract or purchase order, the producer shall be responsible for the performance of all inspections and test requirements specified herein. Unless otherwise agreed upon, the producer may use his own or any other suitable facilities for the performance of the inspection and test requirements specified herein. The purchaser shall have the right to perform any of the inspections and tests set forth in the specification where such inspections are deemed necessary to confirm that material conforms to prescribed requirements.

6. Materials and Manufacture

6.1 The responsibility of furnishing castings that can be laid out and machined to the finished dimensions within the permissible variations specified, as shown on the blueprints or drawings, shall rest with the producer, except where mold equipment is furnished by the purchaser.

7. Chemical Composition

7.1 The castings shall conform to the chemical composition limits prescribed in Table 1. Conformance shall be determined by the producer by analyzing samples at the time the castings are poured, or samples taken from castings or tension test specimens representative of the castings. If the producer has determined the chemical composition of the material during the course of manufacture, he shall not be required to sample and analyze the finished product.

8. Sampling for Determination of Chemical Composition

8.1 A sample for determination of chemical composition shall be taken to represent one of the following:

8.1.1 Not more than 4000 lb (1814 kg) of clean castings (gates and risers removed) or a single casting poured from one furnace.

8.1.2 The castings poured continuously from one furnace in not more than eight consecutive hours.

8.2 Samples for determination of chemical composition shall be taken in accordance with one of the following methods:

TABLE 2
TENSILE REQUIREMENTS[A, B]

Alloy ANSI[G]	Alloy UNS	Temper[C]	Tensile Strength, min, ksi (MPa)[E]	Yield Strength [D] (0.2% offset), min, ksi (MPa)[E]	Elongation in 2 in. or 4 × Diameter, min, %	Typical Brinell Hardness[F] 500-kgf load, 10-mm ball
204.0	A02040	T4 separately cast specimens	48.0 (331)	29.0 (200)	8.0	...
208.0	A02080	T4	33.0 (228)	15.0 (103)	4.5	75
		T6	35.0 (241)	22.0 (152)	2.0	90
		T7	33.0 (228)	16.0 (110)	3.0	80
213.0	A02130	F	23.0 (159)	...	...	...
222.0	A02220	T551	30.0 (207)	...	[H]	115
		T65	40.0 (276)	...	[H]	140
242.0	A02420	T571	34.0 (234)	...	[H]	105
		T61	40.0 (276)	...	[H]	110
319.0	A03190	F	27.0 (186)	14.0 (97)	2.5	95
336.0[I]	A03360	T551	31.0 (214)	...	[H]	105
		T65	40.0 (276)	...	[H]	125
332.0[I]	A03320	T5	31.0 (214)	...	[H]	105
333.0	A03330	F	28.0 (193)	...	[H]	90
		T5	30.0 (207)	...	[H]	100
		T6	35.0 (241)	...	[H]	105
		T7	31.0 (214)	...	[H]	90
354.0	A03540	T61				
		separately cast specimens	48.0 (331)	37.0 (255)	3.0	
		casting, designated area[J]	47.0 (324)	36.0 (248)	3.0	
		castings, no location designated[J]	43.0 (297)	33.0 (228)	2.0	
		T62				
		separately cast specimens	52.0 (359)	42.0 (290)	2.0	
		castings, designated area[J]	50.0 (344)	42.0 (290)	2.0	
		castings, no location designated[J]	43.0 (297)	33.0 (228)	2.0	
355.0	A03550	T51	27.0 (186)	...	[H]	75
		T62	42.0 (290)	...	[H]	105
		T7	36.0 (248)	...	[H]	90
		T71	34.0 (234)	27.0 (186)	[H]	80
C355.0	A33550	T61				
		separately cast specimens	40.0 (276)	30.0 (207)	3.0	85–90
		castings, designated area[J]	40.0 (276)	30.0 (207)	3.0	
		castings, no location designated[J]	37.0 (255)	30.0 (207)	1.0	85
356.0	A03560	F	21.0 (145)	10.0 (69)	3.0	
		T6	33.0 (228)	22.0 (152)	3.0	85
		T71	25.0 (172)	...	3.0	70
A356.0	A13560	T61				
		separately cast specimens	38.0 (262)	26.0 (179)	5.0	80–90
		castings, designated area [J]	33.0 (228)	26.0 (179)	5.0	
		castings, no location designated[J]	28.0 (193)	26.0 (179)	3.0	
357.0		T6	45.0 (310)	...	3.0	...
A357.0	A13570	T61				
		separately cast specimens	45.0 (310)	36.0 (248)	3.0	100
		castings, designated area[J]	46.0 (317)	36.0 (248)	3.0	...
		castings, no location designated[J]	41.0 (283)	31.0 (214)	3.0	...
359.0	A03590	T61				
		separately cast specimens	45.0 (310)	34.0 (234)	4.0	90
		castings, designated area[J]	45.0 (310)	34.0 (234)	4.0	
		castings, no location designated[J]	40.0 (276)	30.0 (207)	3.0	
		T62				
		separately cast specimens	47.0 (324)	38.0 (262)	3.0	100
		castings, designated area[J]	47.0 (324)	38.0 (262)	3.0	
		castings, no location designated[J]	40.0 (276)	30.0 (207)	3.0	

(continued)

TABLE 2
TENSILE REQUIREMENTS[A, B]

Alloy ANSI[G]	Alloy UNS	Temper[C]	Tensile Strength, min, ksi (MPa)[E]	Yield Strength [D] (0.2% offset), min, ksi (MPa)[E]	Elongation in 2 in. or 4 × Diameter, min, %	Typical Brinell Hardness[F] 500-kgf load, 10-mm ball
443.0	A04430	F	21.0 (145)	7.0 (49)	2.0	45
B443.0	A24430	F	21.0 (145)	6.0 (41)	2.5	45
A444.0	A14440	T4				
		separately cast specimens	20.0 (138)	...	20	...
		castings, designated area[E]	20.0 (138)	...	20	...
513.0[I]	A05130	F	22.0 (152)	12.0 (83)	2.5	60
535.0	A05350	F	35.0 (241)	18.0 (124)	8.0	...
705.0	A07050	T1 or T5	37.0 (255)	17.0 (117)	10.0	
707.0	A07070	T1	42.0 (290)	25.0 (173)	4.0	
		T7	45.0 (310)	35.0 (241)	3.0	
711.0[I]	A07110	T1	28.0 (193)	18.0 (124)	7.0	70
713.0	A07130	T1 or T5	32.0 (221)	22.0 (152)	4.0	
850.0	A08500	T5	18.0 (124)	...	8.0	
851.0[I]	A08510	T5	17.0 (117)	...	3.0	
		T6	18.0 (124)	...	8.0	
852.0[I]	A08520	T5	27.0 (186)	...	3.0	

[A] If agreed upon by the manufacturer and the purchaser, other mechanical properties may be obtained by other heat treatments such as annealing, aging, or stress relieving.

[B] For purposes of determining conformance with this specification, each value for tensile strength and yield strength shall be rounded off to the nearest 0.1 ksi, and each value for elongation shall be rounded to the nearest 0.5%, both in accordance with the rounding method of Practice E 29.

[C] Temper designations:

F As fabricated.

O Annealed.

T1 Cooled from an elevated temperature shaping process and naturally aged to a substantially stable condition.

T4 Solution heat-treated and naturally aged to a substantially stable condition.

T5 Cooled from an elevated temperature shaping process and then artificially aged.

T6 Solution heat-treated and then artificially aged.

T7 Solution heat-treated and stabilized.

Additional digits, the first of which shall not be zero, may be added to designations T1 through T10 to indicate a variation in treatment that significantly alters the characteristics of the product.

[D] Yield strength to be evaluated only when specified in contract or purchase order.

[E] SI units for information only. For explanation of the SI Unit "MPa" see Appendix X2.

[F] Hardness values given for information only, not required for acceptance.

[G] ASTM alloy designations are recorded in Practice B 275.

[H] Not required.

[I] 336.0 formerly A332.0, 332.0 formerly F332.0, 513.0 formerly A514.0, 711.0 formerly C712.0, 851.0 formerly A850.0, 852.0 formerly B850.0.

[J] These properties apply only to castings having section thicknesses not greater than 2 in. except that section thicknesses of $\frac{3}{4}$ in., max, shall apply to Alloy A444.0.

8.2.1 *Samples for Chemical Analysis* — Samples for chemical analysis shall be taken by sawing, drilling, or milling the casting or test specimens in such a manner as to be representative of the material (Practice E 88). The weight of a prepared sample shall not be less than 75 g.

8.2.2 *Samples for Spectrochemical and Other Methods of Analysis* — Samples for spectrochemical analysis shall be taken in accordance with Practices E 716. Samples for other methods of analysis shall be suitable for the form of material being analyzed and the type of analytical methods used.

9. Methods for Determination of Chemical Composition

9.1 The determination of chemical composition shall be made in accordance with suitable chemical (Test Methods E 34), or spectrochemical (Test Methods E 227, E 607, and E 1251) methods. Other methods may be used only when no published ASTM method is available. In case of dispute, the method of analysis shall be agreed upon by the producer and the purchaser.

10. Requirements for Castings Produced for Governmental and Military Agencies

10.1 *Material Requirements:*

10.1.1 Unless otherwise specified, only aluminum alloy conforming to the requirements of Specification B 179 or producers foundry scrap, identified as being made from alloy conforming to Specification B 179, shall be used in the remelting furnace from which molten metal is taken for pouring directly into castings. Additions of small amounts of modifying and grain refining elements or alloys are permitted.

10.1.2 Pure materials, recycled materials, and master alloys may be used to make alloys conforming to this specification, provided chemical analysis can be taken and adjusted to conform to Table 1 prior to pouring any castings.

10.2 *Foundry Control* — When specified, castings shall be produced under foundry control approved by the purchaser. Foundry control shall consist of examination of castings by radiographic or other approved methods for determining internal discontinuities until the gating, pouring, and other foundry practices have been established to produce castings meeting the quality standards furnished by the purchaser or agreed upon by the purchaser and the producer. When foundry practices have been so established, the production method shall not be significantly changed without demonstrating to the satisfaction of the purchaser that the change does not adversely affect the quality of the castings. Minor changes of ±50°F (±28°C) from the established nominal temperature are permissible.

11. Tensile Requirements

11.1 The separately cast tension test specimens representing the castings shall meet the mechanical properties prescribed in Table 2.

11.2 When specified, the tensile strength and elongation of test specimens cut from castings shall be in accordance with Table 2 for Alloys 354.0, C355.0, A356.0, A357.0, and A444.0. For other alloys a minimum of 75% of the tensile and yield strength values and not less than 25% of the elongation values specified in Table 2 are required. The measurement of elongation is not required for test specimens cut from castings if 25% of the specified minimum elongation value published in Table 2 is 0.5% or less. If grade D quality castings as described in Table 3 are specified, no tensile tests shall be specified nor tensile requirements be met on specimens cut from castings.

11.3 Although Alloys 705.0, 707.0, and 713.0 are most frequently used in the naturally aged condition, by agreement of the producer and the purchaser, the castings may be artificially aged. The producer and the purchaser may also agree to base the acceptance of castings on artificially aged test bars. The conditions of artificial aging shown in Practice B 597 shall be employed unless other conditions are accepted by mutual consent.

12. Test Specimens

12.1 Separately cast test specimens shall be cast in iron molds. A recommended gating method is shown in Fig. 1. The test section of the tension test specimen shall be cast to size in accordance with the dimensions shown in Fig. 1 and not machined prior to test. Grip ends may be machined to adapt them in such a manner as to ensure axial loading.

12.2 When properties of castings are to be determined, tension test specimens shall be cut from the locations designated on the drawings, unless otherwise negotiated. If no locations are designated, one or more specimens shall be taken to include locations having significant variation in casting thickness, except that specimens shall not be taken from areas directly under risers. The tension test specimens shall be the standard 0.500-in. diameter specimens shown in Fig. 9 of Test Methods B 557 or a

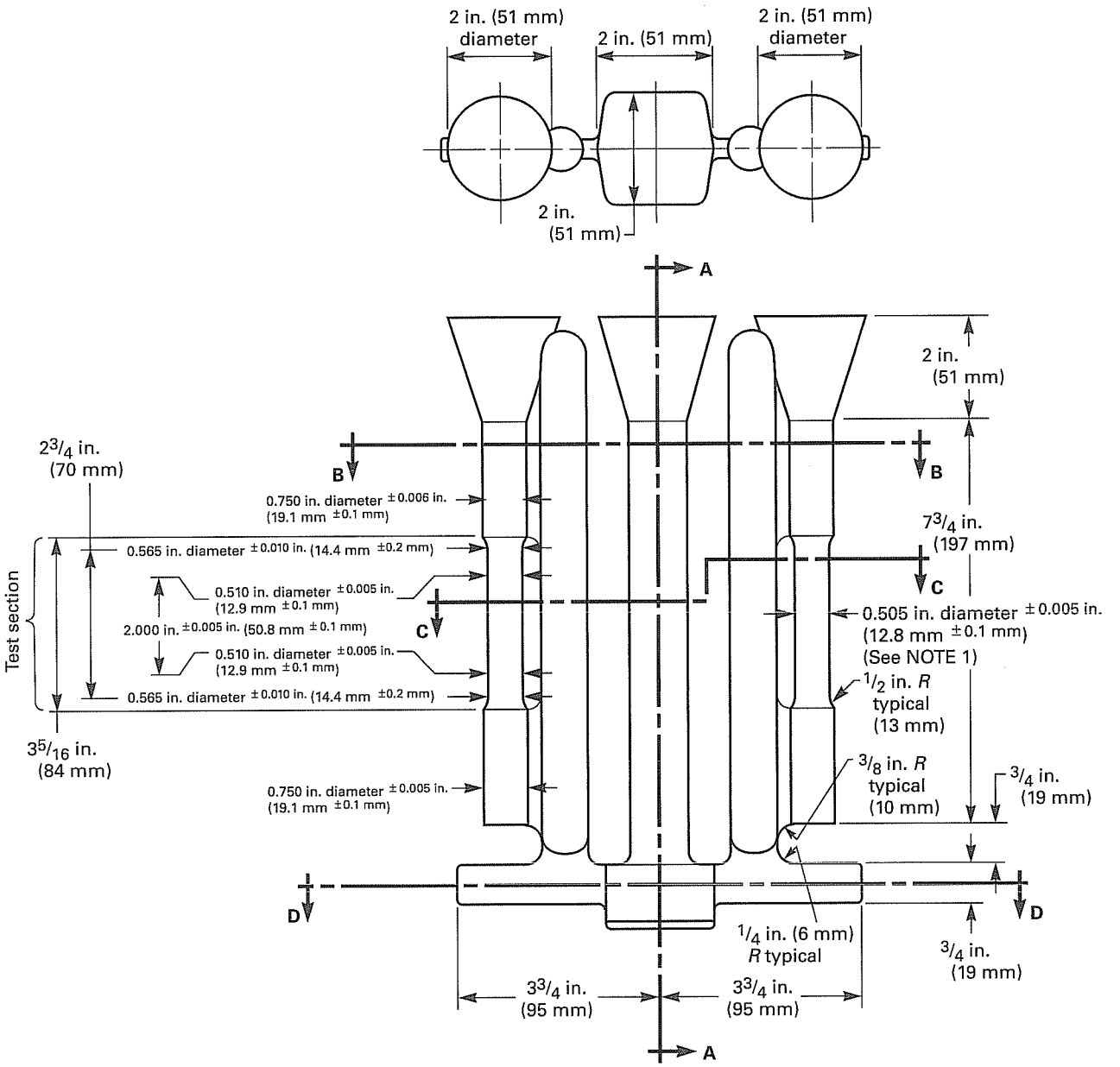

Nominal draft angle to be 20 deg on all square or rectangular sections in direction transverse to parting line.
NOTE 1—Test section of test bar: this section to be gradually tapered from the ends towards the center.

FIG. 1 TENSION TEST SPECIMEN CASTING

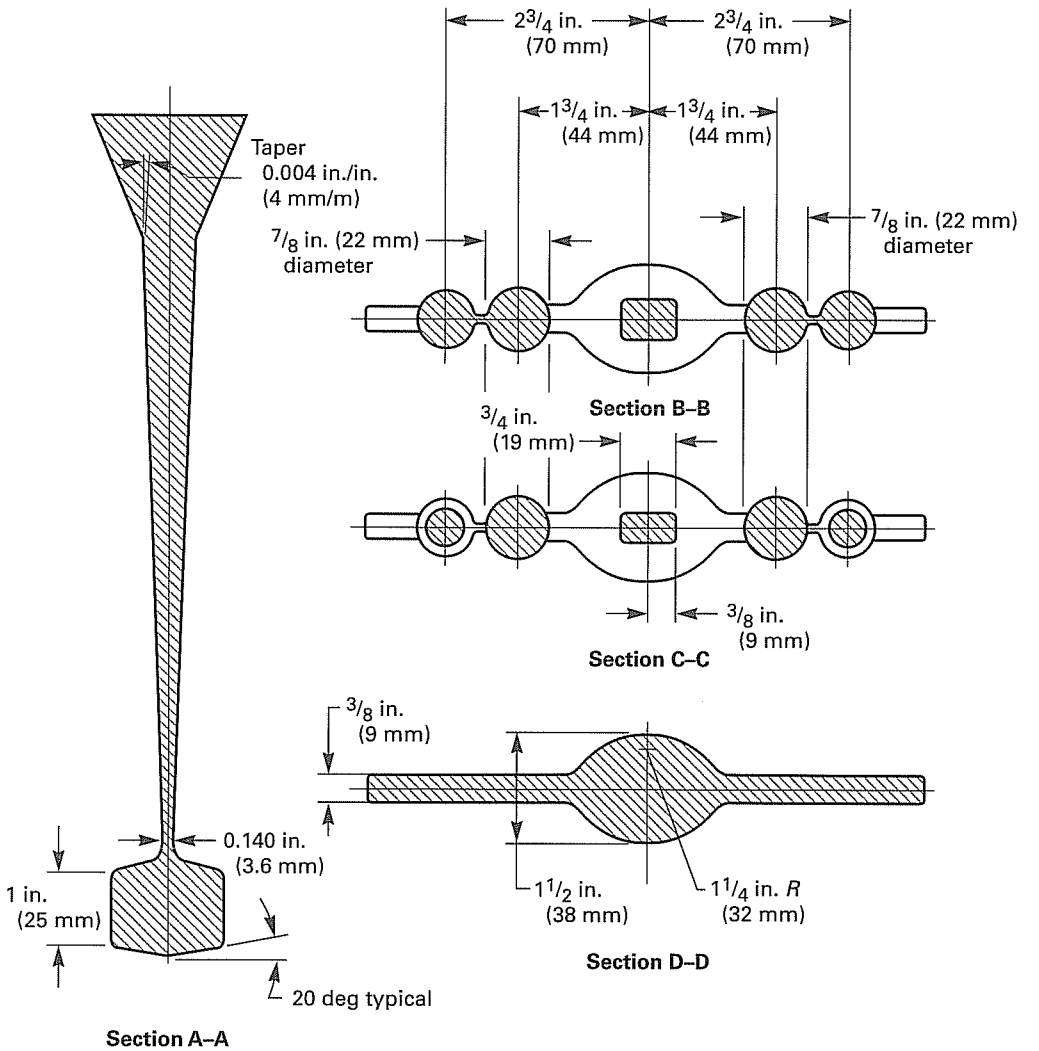

FIG. 2 TENSION TEST SPECIMEN CASTING (CROSS SECTION)

round specimen of smaller size proportional to the standard specimens. In no case shall the dimensions of the smallest specimen be less than the following:

Diameter of reduced section, 0.250 in.
Length of reduced section, 1¼ in.
Radius of fillet, 3/16 in.
Diameter of end section, ⅜ in.
Overall length:
With shouldered ends, 2⅜ in.
With threaded ends, 3 in.
With plain cylindrical ends, 4 in.

12.3 When necessary, a retangular specimen may be used proportional to that shown for the 0.500 in. wide specimen in Fig. 6 of Test Methods B 557, but in no case shall its dimensions be less than the following:

Width of reduced section, ¼ in.
Length of reduced section, 1¼ in.
Radius of fillet, ¼ in.
Overall length, 4 in.

The specified elongation values shall not apply to tests of rectangular specimens.

12.4 If the castings are to be heat treated and separately cast specimens are to be used, the specimens representing such castings shall be heat treated with the castings they represent. If castings are to be heat treated and tests are to be obtained on the castings, the test

specimens shall be taken from the castings after heat treatment.

13. Number of Tests

13.1 Unless otherwise agreed upon by the purchaser and producer, two tension test specimens shall be separately cast and tested to represent the following:

13.1.1 Not more than 4000 lb (1814 kg) of clean castings (gates and risers removed) or a single casting poured from one furnace.

13.1.2 The castings poured continuously from one furnace in not more than eight consecutive hours.

13.2 When tensile properties of castings are to be determined, one per melt-heat combination shall be tested unless otherwise shown on the drawing or specified in the purchase order.

13.3 If any test specimen shows defective machining or flaws, it may be discarded, in which case the purchaser and the producer shall agree upon the selection of a replacement specimen.

14. Test Methods

14.1 The tensile properties shall be determined in accordance with Test Methods B 557.

15. Retests

15.1 If the results of the tension test do not conform to the requirements prescribed in Table 2, test bars representative of the castings may be retested in accordance with the replacement tests and retest provisions of Test Methods B 557 and the result of retests shall conform to the requirements as to mechancial properties specified in Table 2.

16. Workmanship, Finish, and Appearance

16.1 The finished castings shall be uniform in composition and free of blowholes, cracks, shrinks, and other discontinuities in accordance with standards designated and agreed upon as acceptable by the purchaser.

17. Heat Treatment

17.1 When castings are to be heat treated, the practice shall be in accordance with Practice B 597. Heat treatment shall be performed on the whole casting and never on a portion.

18. Repair of Castings

18.1 Castings may be repaired only by processes approved and agreed upon by the producer and purchaser, such as, welding, impregnation, peening, blending, soldering, etc. Limitations on the extent and frequency of such repairs, and methods of inspection of repaired areas should also be agreed upon.

18.2 The welding procedure and the welders shall be qualified in accordance with Section IX of the ASME Code.

18.3 *Repairing of Castings Produced for Governmental and Military Agencies:*

18.3.1 *Welding:*

18.3.1.1 When welding is permitted, it shall be done by methods suitable for the particular alloy. Welding methods shall be in accordance with such specifications as are referenced on the applicable drawings, or as are required by the contract or order.

18.3.1.2 All welding shall be done by qualified welders and by methods approved by the purchaser.

18.3.1.3 When castings are to be supplied in the heat treated condition, they shall be heat treated to the required temper after welding, except that small arc welds may be performed without subsequent heat treatment upon approval of the purchaser.

18.3.1.4 Unless otherwise specified, castings that have been repaired by welding shall have the welded areas examined radiographically after all reworking and heat treatment have been completed.

18.3.1.5 All welds shall be free from cracks, lack of fusion and meet the same quality requirements as the parent material.

18.3.1.6 Welded castings shall be marked with a symbol of three concentric circles with a letter or number designating the welder adjacent to the symbol. The outer circle of the symbol shall be no larger than $\frac{1}{4}$ in. (6 mm) in outside diameter. All welded areas shall be encircled with a ring or white paint prior to submission for final inspection.

18.3.1.7 Repair welding of castings used in naval shipboard pressure vessels, piping systems, and machinery shall be performed in accordance with requirements for repair of castings specified in MIL-STD-278.

18.4 *Impregnation* — When impregnation is permitted, it shall be to correct general seepage leaks only and shall not be used to correct poor foundry technique or porosity in excess of accepted standards. It shall be accomplished in accordance with MIL-STD-276 or, when specified, MIL-I-13857. Unless otherwise authorized by

the purchaser, castings that have been impregnated shall be marked "IMP."

18.5 *Peening* — When peening is permitted, it shall be to correct localized minor seepage leaks and small surface imperfections only, or to disclose subsurface voids for the purpose of inspection. Peening will not be permitted to repair cracks, cold shuts, shrinks, misruns, defects due to careless handling, or other similar major defects. Peening may be accomplished either hot or cold and shall be performed by methods that are acceptable to the purchaser. Peened castings shall be marked with Maltese cross approximately ¼ in. (6 mm) high.

18.6 *Blending* — Blending with suitable grinders or other tools will be permitted for the removal of surface imperfections only, and shall not result in dimensions outside the tolerances shown on the applicable drawings.

19. Source Inspection

19.1 If the purchaser elects to make an inspection of the castings at the producer's works, it shall be so stated in the contract or order.

19.2 If the purchaser elects to have an inspection made at the producer's works, the producer shall afford the inspector all reasonable facilities to satisfy him that the material is being furnished in accordance with this specification. All tests and inspection shall be so conducted as not to interfere unnecessarily with the operation of the works.

20. Foundry Inspection

20.1 Requirements such as surface finish, parting line projections, snagging projections where gates and risers were removed, etc., may be checked visually. It is advisable to have agreed upon observational standards representing both acceptable and unacceptable material.

20.2 *Liquid Penetrant Inspection:*

20.2.1 When specified, liquid penetrant inspection shall be in accordance with Practice E 165, and the required sensitivity shall be specified.

20.2.2 Acceptance standards for discontinuities shall be agreed upon, including size and frequency per unit area and location.

20.3 *Radiographic Inspection:*

20.3.1 When specified, radiographic inspection shall be in accordance with Guide E 94 and Reference Radiographs E 155.

20.3.2 Radiographic acceptance shall be in accordance with the requirements selected from Table 3. Any modifications of the table and the frequency per unit area and location of discontinuities should also be agreed upon.

20.3.3 The number, film size and orientation of radiographs, and the number of castings radiographically inspected shall be agreed upon by the producer and purchaser.

21. Identification and Repair Marking for Castings Produced for Government and Military Agencies

21.1 *Identification* — Unless otherwise specified, each casting shall be marked with the applicable drawing or part number. The marking shall consist of raised Arabic numbers, and when applicable upper-case letters, cast integral. The location of the identification marking shall be as specified on the applicable drawing. When the location is not specified on the drawing, the drawing or part number, or both, shall be placed in a location mutually agreeable to the purchaser and producer.

21.2 *Lot Identification* — When practical, each casting shall also be marked with the melt or inspection lot number.

21.3 *Lot* — A lot shall consist of all of the cleaned castings poured from the same heat or melt when subsequent heat treatment is not required.

21.3.1 When the castings consist of alloys that require heat treatment, the lot shall consist of all castings from the same melt or heat that have been heat treated in the same furnace charge, or if heat treated in a continuous furnace, all castings from the same melt or heat that are discharged from the furnace during a 4-h period.

21.4 *Repair Marking* — All identification markings indicating repairs as specified in 20.1, 20.2, and 20.3 shall be made with a waterproof marking fluid.

22. Rejection and Rehearing

22.1 Material that fails to conform to the requirements of this specification may be rejected. Rejection should be reported to the producer promptly and in writing. In case of dissatisfaction with the results of the test, the producer may make claim for a rehearing.

23. Certification

23.1 The manufacturer shall furnish to the purchaser a certificate stating that each lot has been sampled, tested,

TABLE 3
DISCONTINUITY — LEVEL REQUIREMENTS FOR ALUMINUM CASTINGS IN ACCORDANCE WITH REFERENCE RADIOGRAPHS E 155

Discontinuity	Grade A[A]	Grade B		Grade C		Grade D[A]	
	Section Thickness, in. (mm)						
	1/4 to 3/4 (6.4 to 19.0)	1/4 (6.4)	3/4 (19.0)	1/4 (6.4)	3/4 (19.0)	1/4 (6.4)	3/4 (19.0)
Gas holes	none	1	1	2	2	5	5
Gas porosity (round)	none	1	1	3	3	7	7
Gas porosity (elongated)	none	1	1	4	4	5	5
Shrinkage cavity	none	1	[B]	2	[B]	3	[B]
Shrinkage porosity or sponge	none	1	1	2	2	4	3
Foreign material (less dense material)	none	1	1	2	2	4	4
Foreign material (more dense material)	none	1	1	1	1	4	3
Segregation	none	none			none		none
Cracks	none	none			none		none
Cold shuts	none	none			none		none
Surface irregularity	...	not to exceed drawing tolerance					
Core shaft	...	not to exceed drawing tolerance					

[A] No radiographs available.
[B] Caution should be exercised in requesting Grade A because of the difficulty in obtaining this level.

and inspected in accordance with this specification, and has met the requirements.

24. Packaging, Marking, and Shipping

24.1 The material shall be packaged in such a manner as to prevent damage in ordinary handling and transportation. The type of packaging and gross weight of individual containers shall be left to the discretion of the producer unless otherwise agreed upon. Packaging methods and containers shall be so selected as to permit maximum utility of mechanical equipment in unloading and subsequent handling. Each package or container shall contain only one part number, alloy, and temper of material when packaged for shipment unless otherwise agreed upon.

24.2 Each package or container shall be marked with the purchase order number, part number, quantity, specification number, alloy and temper, gross and net weights, and the name of the producer.

24.3 Packages or containers shall be such as to ensure acceptance by common or other carriers for safe transportation at the lowest rate to the point of delivery.

24.4 When specified in the contract or purchase order, material shall be preserved, packaged, and packed in accordance with the requirement of Practices B 660. The applicable levels shall be as specified in the contract or order. Marking for shipment of such material shall be in accordance with Fed. Std. No. 123 for civil agencies and MIL-STD-129 for military agencies.

25. Keywords

25.1 aluminum; permanent mold castings

ANNEXES

(Mandatory Information)

A1. BASIS FOR INCLUSION OF PROPERTY LIMITS

A1.1 Limits are established at a level at which a statistical evaluation of the data indicates that 99% of the population obtained from all standard material meets the limit with 95% confidence. For the products described, mechanical property limits for the respective size ranges are based on the analyses of at least 100 data from standard production material with no more than ten data from a given lot. All tests are performed in accordance with the appropriate ASTM test methods. For informational purposes, refer to "Statistical Aspects of Mechanical Property Assurance" in the Related Material section of the *Annual Book of ASTM Standards,* Vol. 02.02.

A2. ACCEPTANCE CRITERIA FOR INCLUSION OF NEW ALUMINUM AND ALUMINUM ALLOYS IN THIS SPECIFICATION

A2.1 Prior to acceptance for inclusion in this specification, the composition of wrought or cast aluminum or aluminum alloy shall be registered in accordance with ANSI H35.1. The Aluminum Association holds the Secretariat of ANSI H35 Committee and administers the criteria and procedures for registration.

A2.2 If it is documented that the Aluminum Association could not or would not register a given composition, an alternative procedure and the criteria for acceptance shall be as follows:

A2.2.1 The designation submitted for inclusion does not utilize the same designation system as described in ANSI H35.1. A designation not in conflict with other designation systems or a trade name is acceptable.

A2.2.2 The aluminum or aluminum alloy has been offered for sale in commercial quantities within the prior twelve months to at least three identifiable users.

A2.2.3 The complete chemical composition limits are submitted.

A2.2.4 The composition is, in the judgement of the responsible subcommittee, significantly different from that of any other aluminum or aluminum alloy already in this specification.

A2.2.5 For codification purposes, an alloying element is any element intentionally added for any purpose other than grain refinement and for which minimum and maximum limits are specified. Unalloyed aluminum contains a minimum of 99.00% aluminum.

A2.2.6 Standard limits for alloying elements and impurities are expressed to the following decimal places:

Less than 0.001%	0.000X
0.001 to but less than 0.01%	0.00X
0.01 to but less than 0.10%	
Unalloyed aluminum made by a refining process	0.0XX
Alloys and unalloyed aluminum not made by a refining process	0.0X
0.10 through 0.55%	0.XX
(It is customary to express limits of 0.30 through 0.55% as 0.X0 or 0.X5)	
Over 0.55%	0.X, X.X, etc.
(Except that combined Si + Fe limits for 99.00% minimum aluminum must be expressed as 0.XX or 1.XX)	

A2.2.7 Standard limits for alloying elements and impurities are expressed in the following sequence: Silicon; Iron; Copper; Manganese; Magnesium; Chromium; Nickel; Zinc (Note A2.1); Titanium; Other Elements, Each; Other Elements, Total: Aluminum (Note A2.2).

NOTE A2.1 — Additional specified elements having limits are inserted in alphabetical order of their chemical symbols between zinc and titanium, or are specified in footnotes.

NOTE A2.2 — Aluminum is specified as *minimum* for unalloyed aluminum and as a *remainder* for aluminum alloys.

APPENDICES

(Nonmandatory Information)

X1. PROPERTIES AND CHARACTERISTICS

X1.1 Data in Table X1.1 are approximate and are supplied for general information only.

X2. METRIC EQUIVALENTS

X2.1 The SI unit for strength properties now shown is in accordance with International System of Units (SI). The derived SI unit for force is the Newton (N), which is defined as that force which when applied to a body having a mass of one kilogram gives it an acceleration of one meter per second squared ($N = kg \cdot m/s^2$). The derived SI unit for pressure or stress is the Newton per square meter (N/m^2), which has been named the Pascal (Pa), by the General Conference on Weights and Measures. Since 1 ksi = 6 894 757 Pa, the metric equivalents are expressed as megapascal (MPa), which is the same as MN/m^2 and N/mm^2.

TABLE X1.1
PROPERTIES AND CHARACTERISTICS

Alloy			Foundary Characteristics									Other Characteristics				
ANSI[A]	UNS	Approximate Melting Range,[B] °F	Resistance to Hot Cracking[C]	Pressure Tightness	Fluidity[D]	Solidification Shrinkage Tendency[E]	Normally Heat Treated	Resistance to Corrosion[F]	Machining[G]	Polishing[H]	Electroplating[I]	Anodizing (Appearance)[J]	Chemical Oxide Coating (Protection)[K]	Strength at Elevated Temperature[L]	Suitability for Welding[M]	Suitability for Brazing[N]
204.0	A02040	985 to 1200	4	3	3	4	yes	4	1	2	1	3	4	1	4	no
208.0	A02080	970 to 1170	4	3	3	3	yes	4	3	2	1	3	2	2	4	no
222.0	A02220	965 to 1155	4	4	3	4	yes	5	1	2	1	3	4	1	4	no
242.0	A02420	990 to 1175	4	4	3	4	yes	4	2	2	1	2	3	1	4	no
319.0	A03190	950 to 1125	2	2	2	3	yes	3	3	3	2	4	3	3	2	no
336.0[O]	A03360	1080 to 1050	1	2	1	3	yes	3	4	5	4	5	2	2	2	no
332.0[O]	A03320	970 to 1080	1	2	1	2	aged only	3	3	4	3	5	3	3	2	no
333.0	A03330	960 to 1085	2	2	2	3	no	3	3	3	3	5	3	3	2	no
354.0	A03540	1015 to 1150	1	1	2	2	yes	3	3	3	2	4	2	2	2	no
355.0	A03550	1015 to 1150	1	1	2	2	yes	3	3	3	2	4	2	2	2	no
C355.0	A33550	1015 to 1150	1	1	2	2	yes	3	3	3	2	4	2	2	2	no
356.0	A03560	1035 to 1135	1	1	2	1	yes	2	3	3	1	4	2	3	2	no
A356.0	A13560	1035 to 1135	1	1	2	1	yes	2	3	3	1	4	2	3	2	no
A357.0	A13570	1035 to 1135	1	1	2	1	yes	2	3	3	1	4	2	3	2	no
359.0	A03590	1035 to 1135	1	1	2	1	yes	2	3	3	1	4	2	3	2	no
443.0	A04430	1065 to 1170	1	1	1	2	no	3	5	4	2	4	2	4	1	ltd
B443.0	A24430	1065 to 1170	1	1	1	2	no	2	5	4	2	4	2	4	1	ltd
A444.0	A14440	1065 to 1145	1	1	1	1	yes	2	5	4	2	4	2	4	1	ltd
513.0[O]	A05130	1075 to 1180	4	5	5	4	no	1	1	1	4	1	1	3	5	no
535.0	A05350	1020 to 1165	4	5	5	5	no	1	1	1	5	1	1	3	4	no
705.0	A07050	1105 to 1180	5	4	4	5	aged only	2	1	1	3	1	2	5	4	yes
707.0	A07070	1085 to 1165	5	4	4	5	yes	2	1	1	3	1	2	5	5	yes
711.0[O]	A07110	1120 to 1190	5	4	4	5	aged only	2	1	1	2	1	2	5	4	yes
713.0	A07130	1100 to 1185	5	4	4	5	aged only	2	1	1	2	1	2	5	4	yes
850.0	A08500	435 to 1200	5	5	5	5	aged only	3	1	1	5	4	5	[P]	5	no
851.0[O]	A08510	440 to 1165	4	4	5	4	yes	3	1	1	5	4	5	[P]	5	no
852.0[O]	A08520	400 to 1175	5	5	5	5	aged	3	1	1	5	4	5	[P]	5	no

(continued)

TABLE X1.1
PROPERTIES AND CHARACTERISTICS (CONT'D)

NOTE — 1 indicates best of group; 5 indicates poorest of group.

[A] ASTM alloy designations are recorded in Practice B 275.
[B] Temperatures of solidus and liquidus are indicated; pouring temperatures will be higher.
[C] Ability of alloy to withstand stresses from contraction while cooling through hot-short or brittle-temperature range.
[D] Ability of liquid alloy to flow readily in mold and fill thin sections.
[E] Decrease in volume accompanying freezing of alloy and measure of amount of compensating feed metal required in form of risers.
[F] Based on resistance of alloy in standard type salt-spray test.
[G] Composite rating based on ease of cutting, chip characteristics, quality of finish, and tool life. Ratings, in the case of heat-treatable alloys, based on T6 temper. Other tempers, particularly the annealed temper, may have lower rating.
[H] Composite rating based on ease and speed of polishing and quality of finish provided by typical polishing procedure.
[I] Ability of casting to take and hold an electroplate applied by present standard methods.
[J] Rates of lightness of color, brightness, and uniformity of clear anodized coating applied in sulfuric acid electrolyte.
[K] Rated on combined resistance of coating and base alloy to corrosion.
[L] Rating based on tensile and yield strengths at temperatures up to 500°F, after prolonged heating at testing temperature.
[M] Based on ability of material to be fusion-welded with filler rod or same alloy.
[N] Refers to suitability of alloy to withstanding brazing temperatures without excessive distortion or melting.
[O] 356.0 formerly A332.0, 332.0 formerly F332.0, 513.0 formerly A514.0, 711.0 formerly C712.0, 851.0 formerly A850.0, 852.0 formerly B850.0.
[P] Not recommended for service at elevated temperatures.

SPECIFICATION FOR COPPER AND COPPER-ALLOY SEAMLESS CONDENSER TUBES AND FERRULE STOCK

SB-111

(Identical with ASTM Specification B 111-95 for the alloys and tempers covered except for the deletion of Supplementary Requirements for government procurement and editorial differences. Certification has been made mandatory.)

1. Scope

1.1 This specification covers seamless tube and ferrule stock of copper and various copper alloys up to $3\frac{1}{8}$ in., inclusive, in diameter, for use in surface condensers, evaporators, and heat exchangers. Tubes for this application are normally made from the following coppers or copper alloys:

Copper or Copper Alloy UNS No.	Previously Used Designation	Type of Metal
C10200	OF[A]	Oxygen-free without residual deoxidants
C12000	DLP[A]	Phosphorized, low residual phosphorus
C12200	DHP[A]	Phosphorized, high residual phosphorus
C14200	DPA[A]	Phosphorized, arsenical
C19200	...	Phosphorized, 1% iron
C23000	...	Red Brass
C28000	...	Muntz Metal
C44300	...	Admiralty Metals, B, C, and D
C44400	...	...
C44500	...	...
C60800	...	Aluminum Bronze
C68700	...	Aluminum Brass, B
C70400	...	95-5 Copper-Nickel
C70600	...	90-10 Copper-Nickel
C71000	...	80-20 Copper-Nickel
C71500	...	70-30 Copper-Nickel
C72200	...	...

[A] Designations listed in Classification B 224.

NOTE 1 — A complete metric companion to specification B 111 has been developed — B 111M; therefore, no metric equivalents are presented in this specification.

NOTE 2 — **Warning:** Mercury is a definite health hazard in use and disposal. (See 12.1.)

1.2 The following safety hazards caveat pertains only to the test methods portion, Section 18, of this specification: *This standard does not purport to address all of the safety concerns, if any, associated with its use. It is the responsibility of the user of this standard to establish appropriate safety and health practices and determine the applicability of regulatory limitations prior to use.*

2. Referenced Documents

2.1 The following documents of the issue in effect on date of material purchase form a part of this specification to the extent referenced herein:

2.1.1 *ASTM Standards:*

B 153 Test Method for Expansion (Pin Test) of Copper and Copper-Alloy Pipe and Tubing

B 154 Test Method for Mercurous Nitrate Test for Copper and Copper Alloys

B 170 Specification for Oxygen-Free Electrolytic Copper — Refinery Shapes

B 224 Classification of Coppers

E 8 Test Methods for Tension Testing of Metallic Materials

E 29 Practice for Using Significant Digits in Test Data to Determine Conformance with Specifications

E 53 Test Methods for Chemical Analysis of Copper

E 54 Test Methods for Chemical Analysis of Special Brasses and Bronzes

E 55 Practice for Sampling Wrought Nonferrous Metals and Alloys for Determination of Chemical Composition

E 62 Test Methods for Chemical Analysis of Copper and Copper Alloys (Photometric Methods)
E 75 Test Methods for Chemical Analysis of Copper-Nickel and Copper-Nickel-Zinc Alloys
E 112 Test Methods for Determining Average Grain Size
E 243 Practice for Electromagnetic (Eddy Current) Examination of Copper and Copper-Alloy Tubes
E 478 Test Methods for Chemical Analysis of Copper Alloys
E 527 Practice for Numbering Metals and Alloys (UNS)

3. Terminology

3.1 *Definitions:*

3.1.1 *lengths* — straight pieces of the product.

3.1.1.1 *specific* — straight lengths that are uniform in length, as specified, and subject to established length tolerances.

3.1.2 *tube, seamless* — a tube produced with a continuous periphery in all stages of the operations.

3.1.2.1 *tube, condenser* — See *tube, heat exchanger.*

3.1.2.2 *tube, ferrule* — a tube from which metal rings or collars (ferrules) are made for use in installing condenser tubes.

3.1.2.3 *tube, heat exchanger* — a tube manufactured to special requirements as to dimensional tolerances, finish, and temper for use in condensers and other heat exchangers.

3.2 *Description of Term Specific to This Standard:*

3.2.1 *capable of*— the test need not be performed by the producer of the material. However, should subsequent testing by the purchaser establish that the material does not meet these requirements, the material shall be subject to rejection.

4. Ordering Information

4.1 Orders for material under this specification shall include the following information:

4.1.1 Quantity of each size (number of pieces and number of feet),

4.1.2 Material (Section 1),

4.1.3 Form (tube or ferrule stock),

4.1.4 Temper (Section 7),

4.1.5 Whether tension test is required (Section 18),

4.1.6 Whether a pressure test is to be used instead of the eddy current test (see 13.1),

4.1.7 Dimensions, the diameter, wall thickness, whether minimum or nominal wall, and length (see Section 14),

4.1.8 Whether cut ends of the tube are to be deburred (see 15.1),

4.1.9 If the product is to be subsequently welded (see Table 1 and Footnote B).

4.1.10 Specification number and date,

4.1.11 Certification is required (see 22.1), and

4.1.12 Mill test report, if required (see 24.1).

5. Materials and Manufacture

5.1 The material shall be of such quality and purity that the finished product shall have the properties and characteristics prescribed in this specification, and shall be cold worked to the specified size.

6. Chemical Composition

6.1 The material shall conform to the chemical requirements specified in Table 1.

6.2 These specification limits do not preclude the presence of other elements. Limits for unnamed elements may be established by agreement between manufacturer or supplier and purchaser.

6.2.1 *Copper Alloy UNS No. C19200* — Copper may be taken as the difference between the sum of all the elements analyzed and 100%. When all the elements in Table 1 are analyzed, their sum shall be 99.8% minimum.

6.2.2 For copper alloys in which copper is specified as the remainder, copper may be taken as the difference between the sum of all the elements analyzed and 100%.

6.2.2.1 When all the elements in Table 1 are analyzed, their sum shall be as shown in the following table.

Copper Alloy UNS No.	Copper Plus Named Elements, % min.
C60800	99.5
C70400	99.5
C70600	99.5
C71000	99.5
C71500	99.5
C72200	99.8

6.2.3 For copper alloys in which zinc is specified as the remainder, either copper or zinc may be taken as the difference between the sum of all the elements analyzed and 100%.

TABLE 1
CHEMICAL REQUIREMENTS

Copper or Copper Alloy UNS No.	Composition, %												
	Copper[A]	Tin	Aluminum	Nickel, incl Cobalt	Lead, max	Iron	Zinc	Manganese	Arsenic	Antimony	Phosphorus	Chromium	Other Named Elements
C10200[B]	99.95 min	...	...	...	...	...	...	...	...	...	...	...	...
C12000	99.90 min	...	...	...	...	...	...	...	...	...	0.004–0.012	...	...
C12200	99.9 min	...	...	...	...	...	...	...	...	...	0.015–0.040	...	...
C14200	99.40 min	...	...	...	...	...	...	...	0.15–0.50	...	0.015–0.040	...	...
C19200	98.7 min	...	...	...	...	0.8–1.2	...	...	...	...	0.01–0.04	...	...
C23000	84.0–86.0	...	...	...	0.05	0.05 max	remainder	...	...	...	...	...	...
C28000	59.0–63.0	...	...	...	0.30	0.07 max	remainder	...	...	...	...	...	...
C44300	70.0–73.0	0.9–1.2	...	...	0.07	0.06 max	remainder	...	0.02–0.06	...	...	...	...
C44400	70.0–73.0	0.9–1.2	...	...	0.07	0.06 max	remainder	...	...	0.02–0.10	...	...	...
C44500	70.0–73.0	0.9–1.2	...	...	0.07	0.06 max	remainder	...	...	...	0.02–0.10	...	...
C60800	remainder	...	5.0–6.5	...	0.10	0.10 max	...	...	0.02–0.35	...	...	...	...
C68700	76.0–79.0	...	1.8–2.5	...	0.07	0.06 max	remainder	...	0.02–0.10	...	...	...	...
C70400	remainder	...	...	4.8–6.2	0.05	1.3–1.7	1.0 max	0.30–0.8	...	...	...	...	...
C70600	remainder	...	...	9.0–11.0	0.05[C]	1.0–1.8	1.0 max[C]	1.0 max	...	...	[C]	...	[C]
C71000	remainder	...	...	19.0–23.0	0.05[C]	0.50–1.0	1.0 max[C]	1.0 max	...	...	[C]	...	[C]
C71500	remainder	...	...	29.0–33.0	0.05[C]	0.40–1.0	1.0 max[C]	1.0 max	...	...	[C]	...	[C]
C72200	remainder	...	...	15.0–18.0	0.05[C]	0.50–1.0	1.0 max[C]	1.0 max	...	...	[C]	0.30–0.70	[C]

[A] Copper (including silver).

[B] Oxygen in C10200 shall be 10 ppm max.

[C] When the product is for subsequent welding applications, and so specified by the purchaser, zinc shall be 0.50% max, lead 0.02% max, phosphorus 0.02% max, sulfur 0.02% max, and carbon 0.05% max.

6.2.3.1 When all the elements in Table 1 are analyzed, their sum shall be as shown in the following table.

Copper Alloy UNS No.	Copper Plus Named Elements, % min.
C23000	99.8
C28000	99.7
C44300	99.6
C44400	99.6
C44500	99.6
C68700	99.5

7. Temper

7.1 Tubes of Copper Alloy UNS Nos. C23000, C28000, C44300, C44400, C44500, C60800, C68700, and C71000 shall be furnished in the annealed (O) temper unless otherwise specified on the purchase order.

7.2 Tubes of Copper Alloy UNS No. C71500 shall be supplied in one of the following tempers as specified: *(1)* annealed (O) or *(2)* drawn, stress-relieved (HR50).

7.3 Tubes of Copper Alloy UNS Nos. C10200, C12000, C12200, and C14200 shall be supplied in any one of the following tempers, one of which shall be specified: *(1)* light-drawn (H55), *(2)* hard-drawn (H80), or *(3)* hard-drawn, end-annealed.

7.4 Tubes of Copper Alloy UNS No. C19200 shall be supplied in any of the following tempers, one of which shall be specified: *(1)* annealed (O), *(2)* light-drawn (H55), *(3)* hard-drawn (H80), or *(4)* hard-drawn, end-annealed.

7.5 Tubes of Copper Alloy UNS Nos. C70400, C70600, and C72200 may be supplied in either light-drawn (H55) or annealed (O) temper.

7.6 Tubes for ferrule stock shall be annealed sufficiently to be fully recrystallized.

NOTE 3 — Some tubes, when subjected to aggressive environments, may be subjected to stress-corrosion cracking failure because of the residual tensile stresses developed in straightening. For such applications, it is suggested that tubes of Copper Alloy UNS Nos. C23000, C28000, C44300, C44400, C44500, C60800, and C68700 be subjected to a stress-relieving thermal treatment subsequent to straightening. If required, this must be specified on the purchase order or contract. Tolerances for roundness and length, and the condition of straightness, for tube so ordered, shall be to the requirements agreed upon between the manufacturer and the purchaser.

8. Mechanical Properties

8.1 Material specified to meet the requirements of the ASME *Boiler and Pressure Vessel Code* shall have tensile properties as prescribed in Table 2.

9. Microscopical Examination

9.1 Samples of annealed-temper tubes selected for test shall be subjected to microscopical examination at a magnification of 75 diameters and shall show uniform and complete recrystallization. Materials other than Copper Alloy UNS Nos. C19200 and C28000 shall have an average grain size within the limits of 0.010 to 0.045 mm. These requirements do not apply to tubes of light-drawn (H55), hard-drawn (H80), hard-drawn, end-annealed, or drawn, stress-relieved tempers (HR50).

10. Expansion Test

10.1 Tube specimens selected for test shall withstand the expansion shown in Table 3 when expanded in accordance with Test Method B 153. The expanded tube shall show no cracking or rupture visible to the unaided eye.

NOTE 4 — The term "unaided eye" as used herein permits the use of corrective spectacles necessary to obtain normal vision.

10.2 Hard-drawn tube not end-annealed are not subject to this test. When tubes are specified end-annealed, this test is required and shall be made on the annealed ends.

10.3 Tubes for ferrule stock are not subject to the expansion test.

11. Flattening Test

11.1 Test specimens at least 18 in. in length in the annealed condition shall be flattened on different elements throughout the lengths remaining after specimens for the expansion and metallographic tests have been taken. Each element shall be slowly flattened by one stroke of a press. The term "flattened" shall be interpreted as follows: a micrometer caliper set at three times the wall thickness shall pass over the tube freely throughout the flattened part except at the points where the change in element of flattening takes place. The flattened elements shall not show cracking or rupture clearly visible to the unaided eye (Note 4). When tubes are specified in a temper other than annealed this test is required but shall be made on annealed specimens.

11.2 Tubes for ferrule stock are not subject to flattening test.

12. Mercurous Nitrate Test

12.1 Warning — Mercury is a definite health hazard and therefore equipment for the detection and removal of mercury vapor produced in volatilization is recommended. The use of rubber gloves in testing is advisable.

TABLE 2
TENSILE REQUIREMENTS

Copper or Copper Alloy UNS No.	Temper Designation		Tensile Strength min ksi[A]	Yield Strength[B] min ksi[A]	Elongation in 2 in., min %
	Standard	Former			
C10200, C12000, C12200, C14200	H55	light-drawn	36	30	...
C10200, C12000, C12200, C14200	H80	hard-drawn	45	40	...
C19200	H55	light-drawn	40	35	...
C19200	H80	hard-drawn	48	43	...
C19200	061	annealed	38	12	...
C23000	061	annealed	40	12	...
C28000	061	annealed	50	20	...
C44300, C44400, C44500	061	annealed	45	15	...
C60800	061	annealed	50	19	...
C68700	061	annealed	50	18	...
C70400	061	annealed	38	12	...
C70400	H55	light-drawn	40	30	...
C70600	061	annealed	40	15	...
C70600	H55	light-drawn	45	35	...
C71000	061	annealed	45	16	...
C71500	061	annealed	52	18	...
C71500:					
Wall thicknesses up to 0.048 in., incl	HR50	drawn, stress-relieved	72	50	12
Wall thicknesses over 0.048 in.	HR50	drawn, stress-relieved	72	50	15
C72200	061	annealed	45	16	...
C72200	H55	light-drawn	50	30	...

[A] ksi = 1000 psi
[B] At 0.5% extension under load.

TABLE 3
EXPANSION REQUIREMENTS

Temper Designation		Copper or Copper Alloy UNS No.	Expansion of Tube Outside Diameter, in Percent of Original Outside Diameter
Standard	Former		
061	annealed	C19200	30
		C23000	20
		C28000	15
		C44300, C44400, C44500	20
		C60800	20
		C68700	20
		C70400	30
		C70600	30
		C71000	30
		C71500	30
		C72200	30
H55	light-drawn	C10200, C12000, C12200	20
		C14200	20
		C19200	20
		C70400	20
		C70600	20
		C72200	20
HR50	drawn, stress relieved	C71500	20
	hard-drawn, end annealed	C10200, C12000, C12200, C14200	30

TABLE 4
NOTCH DEPTH

Tube Wall Thickness, in.	Tube Outside Diameter, in.		
	Over 1/4 to 3/4, incl	Over 3/4 to 1 1/4, incl	Over 1 1/4 to 3 1/8, incl
Over 0.017–0.032	0.005	0.006	0.007
0.032–0.049, incl	0.006	0.006	0.0075
0.049–0.083, incl	0.007	0.0075	0.008
0.083–0.109, incl	0.0075	0.0085	0.0095
0.109–0.120, incl	0.009	0.009	0.011

TABLE 5
DIAMETER OF DRILLED HOLES

Tube Outside Diameter, in.	Diameter of Drilled Holes, in.	Drill No.
1/4–3/4, incl	0.025	72
Over 3/4–1, incl	0.031	68
Over 1–1 1/4, incl	0.036	64
Over 1 1/4–1 1/2, incl	0.042	58
Over 1 1/2–1 3/4, incl	0.046	56
Over 1 3/4–2, incl	0.052	55

12.2 The test specimens, cut 6 in. in length, shall withstand without cracking, an immersion in the standard mercurous nitrate solution prescribed in Test Method B 154. The test specimen shall include the finished tube end. The mercurous nitrate test is required only for Copper Alloy UNS Nos. C23000, C28000, C44300, C44400, C44500, C60800, and C68700.

13. Nondestructive Testing

13.1 Each tube shall be subjected to the eddy-current test in 13.1.1. Tubes may be tested in the final drawn, annealed, or heat-treated temper or in the drawn temper prior to the final anneal or heat treatment unless otherwise agreed upon by the supplier and the purchaser. The purchaser may specify either of the tests in 13.1.2 or 13.1.3 as an alternative to the eddy-current test.

13.1.1 *Eddy-Current Test* — Each tube shall be passed through an eddy-current testing unit adjusted to provide information on the suitability of the tube for the intended application. Testing shall follow the procedures of Practice E 243.

13.1.1.1 The depth of the round-bottom transverse notches and the diameters of the drilled holes in the calibrating tube used to adjust the sensitivity of the test unit are shown in Tables 4 and 5, respectively.

13.1.1.2 Tubes that do not actuate the signaling device of the eddy-current tester shall be considered to conform to the requirements of this test. Tubes causing irrelevant signals because of moisture, soil, and like effects may be reconditioned and retested. Such tubes, when retested to the original test parameters, shall be considered to conform if they do not cause output signals beyond the acceptable limits. Tubes causing irrelevant signals because of visible and identifiable handling marks may be retested by the hydrostatic test prescribed in 13.1.2, or the pneumatic test prescribed in 13.1.3. Tubes meeting requirements of either test shall be considered to conform if the tube dimensions are within the prescribed limits, unless otherwise agreed upon between the manufacturer and the purchaser.

13.1.2 *Hydrostatic Test* — Each tube shall stand, without showing evidence of leakage, an internal hydrostatic pressure sufficient to subject the material to a fiber stress of 7000 psi, determined by the following equation for thin hollow cylinders under tension. The tube need not be tested at a hydrostatic pressure of over 1000 psi unless so specified.

$$P = 2St/(D - 0.8t)$$

where:

P = hydrostatic pressure, psig,
t = thickness of tube wall, in.,
D = outside diameter of the tube, in., and
S = allowable stress of the material, psi.

13.1.3 *Pneumatic Test* — Each tube shall be subjected to an internal air pressure of 60 psig, minimum, for 5 s without showing evidence of leakage. The test method used shall permit easy visual detection of any leakage, such as by having the tube under water or by the pressure differential method. Any evidence of leakage shall be cause for rejection.

14. Dimensions and Permissible Variations

14.1 *Diameter* — The outside of the tubes shall not vary from that specified by more than the amounts shown in Table 6 as measured by "go" and "no-go" ring gages.

14.2 *Wall Thickness Tolerances:*

14.2.1 *Tubes Ordered to Minimum Wall* — No tube wall at its thinnest point shall be less than the specified wall thickness. The maximum plus deviation from the specified wall at any point shall not exceed twice the values shown in Table 7.

14.2.2 *Tubes Ordered to Nominal Wall* — The maximum plus and minus deviation from the nominal wall at any point shall not exceed the values shown in Table 7.

TABLE 6
DIAMETER TOLERANCES

	Wall Thickness, in.				
Outside Diameter, in.	0.020[4] 0.022 0.025 0.028	0.032	0.035	0.042	0.049 and Over
	Diameter Tolerance, Plus and Minus, in.				
Up to 0.500, incl	0.003	0.0025	0.0025	0.0025	0.0025
Over 0.500–0.740, incl	0.0040	0.004	0.004	0.0035	0.003
Over 0.740–1.000, incl	0.0060	0.006	0.005	0.0045	0.004
Over 1.000–1.250, incl	. . .	0.009	0.008	0.006	0.0045
Over 1.250–1.375, incl	. . .	. . .	. . .	0.008	0.005
Over 1.375–2.000, incl	. . .	. . .	. . .	. . .	0.006

[4] Tolerances in this column are applicable to light drawn and drawn tempers only. Tolerances for annealed tempers shall be as agreed upon between the manufacturer and the purchaser.

TABLE 7
WALL THICKNESS TOLERANCES, PLUS AND MINUS IN.

	Outside Diameter, in.		
Wall Thickness, in.	Over 1/8 to 5/8, incl	Over 5/8 to 1, incl	Over 1 to 2, incl
0.020, incl to 0.032	0.003	0.003	. . .
0.032, incl to 0.035	0.003	0.003	0.004
0.035, incl to 0.058	0.004	0.0045	0.0045
0.058, incl to 0.083	0.0045	0.005	0.005
0.083, incl to 0.120	0.005	0.0065	0.0065
0.120, incl to 0.134	0.007	0.007	0.0075

TABLE 8
LENGTH TOLERANCES

Specified Length, ft	Tolerance, all Plus, in.
Up to 15	3/32
Over 15–20, incl	1/8
Over 20–30, incl	5/32
Over 30–60, incl	3/8
Over 60–100, incl[A]	1/2

[A] Condenser tubes in lengths over 100 ft are not in present demand. Tolerance values for the lengths will be developed as experience dictates. Tolerance values for lengths in wall thicknesses of 0.020, incl. to 0.032 shall be as agreed upon between the manufacturer or supplier and the purchaser.

14.3 *Length* — The length of the tubes shall not be less than that specified when measured at a temperature of 20°C, but may exceed the specified value by the amounts given in Table 8.

14.4 *Squareness of Cut* — The departure from squareness of the end of the tube shall not exceed the following:

Tube, Outside Diameter, in.	Tolerance
Up to 5/8, incl	0.010 in.
Over 5/8	0.016 in./in. of diameter

14.5 For the purpose of determining conformance with the dimensional requirements prescribed in this specification, any measured value outside the specified limiting values for any dimension may be cause for rejection.

15. Workmanship, Finish, and Appearance

15.1 Roundness, straightness, uniformity of the wall thickness, and inner and outer surface of the tube shall be such as to make it suitable for the intended application. Unless otherwise specified on the purchase order, the cut ends of the tubes shall be deburred by use of a rotating wire wheel or other suitable tool.

15.2 Annealed-temper or stress-relieved tubes shall be clean and smooth but may have a superficial, dull iridescent film on both the inside and the outside surface. Drawn-temper tubes shall be clean and smooth, but may have a superficial film of drawing lubricant on the surfaces.

16. Sampling

16.1 *Sampling* — The lot size, portion size, and selection of sample pieces shall be as follows:

16.1.1 *Lot Size* — 600 tubes or 10 000 lb or fraction of either, whichever constitutes the greater weight.

16.1.2 *Portion Size* — Sample pieces from two individual lengths of finished product.

16.2 Samples taken for the purpose of the tests prescribed in the specification shall be selected in a manner that will represent correctly the material furnished and avoid needless destruction of finished material when samples representative of the material are available from other sources.

17. Number of Tests and Retests

17.1 *Chemical Analysis* — Samples for chemical analysis shall be taken in accordance with Practice E 55. Drillings, millings, etc., shall be taken in approximately equal weight from each of the sample pieces selected in accordance with 16.1.2 and combined into one composite sample. The minimum weight of the composite sample that is to be divided into three equal parts shall be 150 g.

17.1.1 Instead of sampling in accordance with Practice E 55, the manufacturer shall have the option of determining conformance to chemical composition as follows: Conformance shall be determined by the manufacturer by analyzing samples taken at the time the castings are poured or samples taken from the semi-finished product. If the manufacturer determines the chemical composition of the material during the course of manufacture, he shall not be required to sample and analyze the finished product. The number of samples taken for determination of chemical composition shall be as follows:

17.1.1.1 When samples are taken at the time the castings are poured, at least one sample shall be taken for each group of castings poured simultaneously from the same source of molten metal.

17.1.1.2 When samples are taken from the semi-finished product, a sample shall be taken to represent each 10 000 lb or fraction thereof, except that not more than one sample shall be required per piece.

17.1.1.3 Due to the discontinuous nature of the processing of castings into wrought products, it is not practical to identify specific casting analysis with a specific quantity of finished material.

17.1.1.4 In the event that heat identification or traceability is required, the purchaser shall specify the details desired.

17.2 *Other Tests* — For tests specified in Sections 8 to 12 inclusive, specimens shall be taken from each of the pieces selected in accordance with 16.1.2.

17.3 If any test specimen representing a lot fails to conform to the requirements of Sections 6, 7, 8, 9, 10, 11, and 12, two additional specimens, at the option of the manufacturer, may be taken as before, and submitted for check analysis or subjected to any tests in which the original specimen failed, but each of these specimens shall conform to the requirements specified.

18. Test Methods

18.1 The properties and chemical compositions enumerated in this specification shall, in case of disagreement, be determined in accordance with the following ASTM methods:

Test	ASTM Designation
Chemical analysis	B 170,[A] E 53, E 54, E 62, E 75, E 478
Grain size	E 112
Expansion (pin test)	B 153
Mercurous nitrate	B 154
Tension	E 8
Nondestructive test	E 243

[A] Reference to Specification B 170 is to the suggested chemical methods in the annex thereof. When E-1 Committee has tested and published methods for assaying the low-level impurities in copper, the Specification B 170 annex will be eliminated.

18.2 The surface of the test specimen for microscopical examination shall approximate a radial longitudinal section of the tube.

18.3 Tubes selected for test shall be subjected to the tension test which shall, in case of disagreement, be made in accordance with Test Methods E 8. Tension test specimen shall be of the full section of the tube and shall conform to the requirements of the section, Specimens for Pipe and Tube, of Test Methods E 8, unless the limitations of the testing machine preclude the use of such a specimen. Test specimens conforming to Type No. 1 of Fig. 13, Tension Test Specimens for Large-Diameter Tubular Products, of Test Methods E 8, may be used when a full section specimen cannot be tested.

18.4 Whenever tension test results are obtained from both full size and from machined specimens and they differ, the results obtained from full-size test specimens shall be used to determine conformance to the specification requirements.

18.5 Tension test results on material covered by this specification are not seriously affected by variations in speed of testing. A considerable range of testing speed is permissible; however, the range of stressing to the yield strength should not exceed 100 ksi/min. Above the yield strength the movement per minute of the testing machine head under load should not exceed 0.5 in./in. of gage length (or distance between grips for full-section specimens).

19. Significance of Numerical Limits

19.1 For purposes of determining compliance with the specified limits for requirements of the properties listed in the following table, an observed value or a calculated value shall be rounded as indicated in accordance with the rounding method of Practice E 29:

Property	Rounded Unit for Observed or Calculated Value
Chemical composition	nearest unit in the last right-hand place of figures
Tensile strength, Yield strength	nearest ksi, for over 10 to 100 ksi, incl
Elongation	nearest 1%
Grain size	nearest multiple of 0.005 mm

20. Inspection

20.1 The manufacturer shall inspect and make necessary tests to verify that the tubes furnished conform to the requirements of this specification.

20.2 If in addition the purchaser elects to perform his own inspection, the manufacturer shall afford the inspector all reasonable facilities to satisfy him that the tubes are being furnished in accordance with this specification. All tests (except check analysis) and inspection shall be made at the place of manufacture prior to shipment, unless otherwise specified, and shall be so conducted as not to interfere with the operation of the works. When automated finishing and inspection equipment is available at a facility, purchaser and supplier may by mutual agreement accomplish the final inspection simultaneously.

21. Rejection and Rehearing

21.1 Material that fails to conform to the requirements of this specification when inspected or tested by the purchaser or his agent may be rejected. Rejection should be reported to the manufacturer or supplier promptly and in writing. In case of dissatisfaction with the results of the test, the manufacturer or supplier may make claim for a rehearing.

22. Certification

22.1 The manufacturer shall furnish to the purchaser a certificate stating that each lot has been sampled, tested, and inspected in accordance with the specification and has met the requirements.

23. Packaging and Package Marking

23.1 The material shall be separated by size, composition, and temper, and prepared for shipment in such a manner as to ensure acceptance by common carrier for transportation and to afford protection from the normal hazards of transportation.

23.2 Each shipping unit shall be legibly marked with the purchase order number, metal or alloy designation, temper, size, shape, total length or piece count, or both, and name of supplier. The specification number shall be shown, when specified.

24. Mill Test Report

24.1 When specified on the purchase order, the manufacturer shall furnish to the purchaser a test report showing results of tests required by the specification.

25. Keywords

25.1 condenser tube; copper; copper alloys; evaporator; ferrule stock; heat exchanger; seamless tube

APPENDIX

(Nonmandatory Information)

X1. DENSITY OF COPPER AND COPPER ALLOYS

X1.1 The densities of the alloys covered by this specification are given in Table X1.1.

TABLE X1.1
DENSITIES

Copper or Copper Alloy UNS No.	Density, lb/in.^{3}
C10200, C12000,C12200, C14200	0.323
C19200	0.320
C23000	0.316
C28000	0.303
C44300, C44400, C44500	0.308
C60800	0.295
C68700	0.301
C70400	0.323
C70600	0.323
C71000	0.323
C71500	0.323
C72200	0.323

SPECIFICATION FOR NICKEL-COPPER ALLOY (UNS N04400) PLATE, SHEET, AND STRIP

SB-127

(Identical with ASTM Specification B 127-93a.)

1. Scope

1.1 This specification covers rolled nickel-copper alloy (UNS N04400) plate, sheet, and strip.

1.2 The values stated in inch-pound units are to be regarded as the standard. The other values given are for information only.

2. Referenced Documents

2.1 *ASTM Standards:*

B 164 Specification for Nickel-Copper Alloy Rod, Bar, and Wire

E 8 Test Methods for Tension Testing of Metallic Materials

E 10 Test Method for Brinell Hardness of Metallic Materials

E 18 Test Methods for Rockwell Hardness and Rockwell Superficial Hardness of Metallic Materials

E 29 Practice for Using Significant Digits in Test Data to Determine Conformance with Specifications

E 76 Test Methods for Chemical Analysis of Nickel-Copper Alloys

E 112 Test Methods for Determining the Average Grain Size

E 140 Hardness Conversion Tables for Metals (Relationship Between Brinell Hardness, Vickers Hardness, Rockwell Hardness, Rockwell Superficial Hardness, and Knoop Hardness)

F 155 Test Method for Temper of Strip and Sheet Metals for Electronic Devices (Spring-Back Method)

3. Terminology

3.1 *Descriptions of Terms Specific to This Standard* — The terms given in Table 1 shall apply.

4. Ordering Information

4.1 Orders for material under this specification shall include the following information:

4.1.1 *Alloy* — Name or UNS number (see Table 2).

4.1.2 ASTM designation, including year of issue.

4.1.3 *Condition* — See 6.1, 6.2, and Appendix X1.

4.1.4 *Finish* — See Appendix X1.

4.1.5 *Dimensions* — Thickness, width, and length.

4.1.6 *Quantity.*

4.1.7 *Optional Requirements:*

4.1.7.1 *Sheet and Strip* — Whether to be furnished in coil, in cut straight lengths, or in random straight lengths.

4.1.7.2 *Strip* — Whether to be furnished with commercial slit edge, square edge, or round edge.

4.1.7.3 *Plate* — Whether to be furnished specially flattened (7.7.2); also how plate is to be cut (see 7.2.1 and 7.3.2).

4.1.8 *Fabrication Details* — Not mandatory but helpful to the manufacturer.

4.1.8.1 *Welding or Brazing* — Process to be employed.

4.1.8.2 *Plate* — Whether material is to be hot-formed.

4.1.9 *Certification* — State if certification or a report of test results is required (see Section 15).

4.1.10 *Samples for Product (Check) Analysis* — Whether samples for product (check) analysis should be furnished (see 5.2).

4.1.11 *Purchaser Inspection* — If the purchaser wishes to witness the tests or inspection of material at

TABLE 1
PRODUCT DESCRIPTION

Product	Thickness, in. (mm)	Width, in. (mm)
Hot-rolled plate[A]	3/16 and over (Tables 5 and 6)	(Table 8)[C]
Hot-rolled sheet[A]	0.018 to 0.250 (0.46 to 6.4), incl (Table 7)	(Table 10)
Cold-rolled sheet[B]	0.018 to 0.250 (0.46 to 6.4), incl (Table 7)	(Table 10)
Cold-rolled strip[B]	0.005 to 0.250 (0.13 to 6.4), incl (Table 7)	(Table 10)

[A] Material 3/16 to 1/4 in. (4.8 to 6.4 mm), incl, in thickness may be furnished as sheet or plate provided the material meets the specification requirements for the condition ordered.

[B] Material under 48 in. (1219 mm) in width may be furnished as sheet or strip provided the material meets the specification requirements for the condition ordered.

[C] Hot-rolled plate, in widths 10 in. (254 mm) and under, may be furnished as hot-finished rectangles with sheared or cut edges in accordance with Specification B 164, provided the mechanical property requirements of this specification are met.

TABLE 2
CHEMICAL REQUIREMENTS

Element	Composition, % Alloy N04400	Product (Check) Analysis Variations, under min or over max, of the Specified Limit of Element
Nickel, min[A]	63.0	0.45
Copper	28.0 to 34.0	0.15 under min-0.20 over max
Iron, max	2.5	0.05
Manganese, max	2.0	0.04
Carbon, max	0.3	0.02
Silicon, max	0.5	0.03
Sulfur, max	0.024	0.005

[A] Element shall be determined arithmetically by difference.

the place of manufacture, the purchase order must so state indicating which tests or inspections are to be witnessed (see Section 13).

5. Chemical Composition

5.1 The material shall conform to the requirements as to chemical composition prescribed in Table 2.

5.2 If a product (check) analysis is performed by the purchaser, the material shall conform to the product (check) analysis variations prescribed in Table 2.

6. Mechanical and Other Requirements

6.1 *Mechanical Properties* — The material shall conform to the requirements for mechanical properties prescribed in Table 3.

6.2 *Deep-Drawing and Spinning Quality Sheet and Strip* — The material shall conform to the requirements for grain size and hardness properties prescribed in Table 4.

6.2.1 The mechanical properties of Table 3 do not apply to deep-drawing and spinning quality sheet and strip.

7. Dimensions and Permissible Variations

7.1 *Thickness and Weight:*

7.1.1 *Plate* — For plate up to 2 in. (50.8 mm), inclusive, in thickness, the permissible variation under the specified thickness and permissible excess in overweight shall not exceed the amounts prescribed in Table 5.

7.1.1.1 For use with Table 5, plate shall be assumed to weigh 0.319 lb/in.^{3} (8.83g/cm^3).

7.1.2 *Plate* — For plate over 2 in. (50.8 mm) in thickness, the permissible variations over the specified thickness shall not exceed the amounts prescribed in Table 6.

7.1.3 *Sheet and Strip* — The permissible variations in thickness of sheet and strip shall be as prescribed in Table 7. The thickness of strip and sheet shall be measured with the micrometer spindle 3/8 in. (9.5 mm) or more from either edge for material 1 in. (25.4 mm) or over in width and at any place on the strip under 1 in. in width.

7.2 *Width or Diameter:*

7.2.1 *Plate* — The permissible variations in width of rectangular plates and diameter of circular plates shall be as prescribed in Tables 8 and 9.

7.2.2 *Sheet and Strip* — The permissible variations in width for sheet and strip shall be as prescribed in Table 10.

TABLE 3
MECHANICAL PROPERTIES FOR PLATE, SHEET, AND STRIP (ALL THICKNESSES AND SIZES UNLESS OTHERWISE INDICATED)

Condition (Temper)	Tensile Strength, min, psi (MPa)	Yield Strength[A] (0.2% offset), min, psi (MPa)	Elongation in 2 in. or 50 mm, or 4*D*, min, %	Rockwell Hardness (B scale)[B,C]
Hot-Rolled Plate				
Annealed	70 000 (485)	28 000 (195)	35	...
As-rolled[D,E]	75 000 (515)	40 000 (275)	25	...
Hot-Rolled Sheet				
Annealed	70 000 (485)	28 000 (195)	35	...
Cold-Rolled Sheet				
Annealed	70 000 to 85 000 (485 to 585)	28 000 (195)	35	...
Quarter-hard	...	...	...	73 to 83
Half-hard	...	...	...	82 to 90
Hard	100 000 (690)	90 000 (620)	2	...
Cold-Rolled Strip				
Annealed	70 000 to 85 000 (485 to 585)[F]	28 000 (195)	35[F]	...
Skin hard	...	...	...	68 to 73
Quarter-hard	...	...	...	73 to 83
Half-hard	...	...	...	82 to 90
Three-quarter-hard	...	...	...	89 to 94
Hard	100 000 (690)[F]	90 000 (620)	2[F]	...
Spring temper	...	...	...	98 min

[A] Yield strength requirements do not apply to material under 0.020 in. (0.51 mm) in thickness.
[B] For Rockwell or equivalent hardness conversions see Hardness Conversion Tables E 140.
[C] Caution should be observed in using the Rockwell test on thin material, as the results may be affected by specimen thickness. For thicknesses under 0.050 in. (1.3 mm), the use of the Rockwell superficial or the Vickers hardness test is suggested.
[D] As-rolled plate may be given a stress-relieving heat treatment subsequent to final rolling.
[E] As-rolled plate specified "suitable for hot forming" shall be furnished from heats of known good hot-malleability characteristics (see X1.2.2). There are no applicable tensile or hardness requirements for such material.
[F] Not applicable for thickness under 0.010 in. (0.25 mm).

7.3 *Length:*

7.3.1 Sheet and strip of all sizes may be ordered to cut lengths in which case, a variation of $\frac{1}{8}$ in. (3.2 mm) over the specified length shall be permitted.

7.3.2 Permissible variations in length of rectangular plate shall be as prescribed in Table 11.

7.4 *Straightness:*

7.4.1 The edgewise curvature (depth of chord) of flat sheet, strip, and plate shall not exceed 0.05 in. multiplied by the length in feet (0.04 mm multiplied by the length in centimeters).

7.4.2 Straightness for coiled material is subject to agreement between the manufacturer and the purchaser.

7.5 *Edges:*

7.5.1 When finished edges of strip are specified in the contract or purchase order, the following descriptions shall apply:

7.5.1.1 Square-edge strip shall be supplied with finished edges, with sharp, square corners, and without bevel or rounding.

7.5.1.2 Round-edge strip shall be supplied with finished edges, semicircular in form, and the diameter of the circle forming the edge being equal to the strip thickness.

7.5.1.3 When no description of any required form of strip edge is given, it shall be understood that edges such as those resulting from slitting or shearing will be acceptable.

7.5.1.4 Sheet shall have sheared or slit edges.

7.5.1.5 Plate shall have sheared or cut (machined, abrasive-cut, powder-cut, or inert-arc-cut) edges, as specified.

TABLE 4
GRAIN SIZE AND HARDNESS FOR COLD-ROLLED, DEEP-DRAWING, AND SPINNING QUALITY SHEET AND STRIP

Thickness, in. (mm)	Calculated Diameter of Average Grain Section, max		Corresponding ASTM Micro-Grain Size No.	Rockwell B[A,B] Hardness, max
	mm	in.		
Sheet (56 in. (1420 mm) Wide and Under)				
0.050 (1.3) and under	0.075	0.0030	4.5	76
Over 0.050 to 0.250 (1.3 to 6.4), incl	0.110	0.0043	3.5	76
Strip (12 in. (305 mm) Wide and Under)[C]				
0.005[D] to 0.015 (0.13 to 0.38), incl	0.022	0.0009	8[E]	76[E]
Over 0.015 to 0.024 (0.38 to 0.61), incl	0.060	0.0024	5.5	76
Over 0.024 to 0.125 (0.61 to 3.2), incl	0.075	0.0030	4.5	76

[A] For Rockwell or equivalent hardness conversions see Hardness Conversion Tables E 140.

[B] Caution should be observed in using the Rockwell test on thin material as the results may be affected by specimen thickness. For thicknesses under 0.050 in. (1.3 mm), the use of the Rockwell superficial or the Vickers hardness test is suggested.

[C] Sheet requirements in Table 4 apply to strip thicknesses over 0.125 in. (3.2 mm), and for all thicknesses of strip over 12 in. (305 mm) in width.

[D] For ductility evaluations for strip under 0.005 in. (0.13 mm) in thickness, the spring-back test such as described in Test Method F 155 is often used and the manufacturer should be consulted.

[E] Accurate grain size and hardness determinations are difficult to make on strip under 0.005 in. (0.13 mm) in thickness and are not recommended.

7.6 *Squareness (Sheet)* — For sheets of all thicknesses, the angle between adjacent sides shall be 90 ± 0.15° ($\frac{1}{16}$ in. in 24 in.)(1.6 mm in 610 mm).

7.7 *Flatness:*

7.7.1 There shall be no flatness requirements for "deep drawing quality," "spinning quality," or "as-rolled," sheet and strip (see X1.4).

7.7.2 Standard flatness tolerances for plate shall conform to the requirements prescribed in Table 12. "Specially flattened" plate when so specified, shall have permissible variations in flatness as agreed upon between the manufacturer and the purchaser.

8. Workmanship, Finish, and Appearance

8.1 The material shall be uniform in quality and temper, smooth, commercially straight or flat, and free of injurious imperfections.

8.2 *Sheet, Strip, and Plate* — Sheet, strip, and plate supplied in the conditions and finishes as listed in Appendix X1 may be ground or machined to remove surface imperfections, provided such removal does not reduce the material below the minimum specified dimensions. Surface eliminated depressions shall be faired smoothly into the surrounding material. The removal of a surface imperfection shall be verified by the method originally used to detect the imperfection.

9. Sampling

9.1 *Lot* — Definition:

9.1.1 A lot for chemical analysis shall consist of one heat.

9.1.2 A lot for mechanical properties, hardness, and grain size testing shall consist of all material from the same heat, nominal thickness, and condition.

9.1.2.1 Where material cannot be identified by heat, a lot shall consist of not more than 500 lb (227 kg) of material in the same thickness and condition, except for plates weighing over 500 lb, in which case only one specimen shall be taken.

9.2 *Test Material Selection:*

9.2.1 *Chemical Analysis* — Representative samples shall be taken during pouring or subsequent processing.

9.2.1.1 *Product (Check) Analysis* shall be wholly the responsibility of the purchaser.

9.2.2 *Mechanical Properties, Hardness, and Grain Size* — Samples of the material to provide test specimens for mechanical properties, hardness, and grain size shall be taken from such locations in each lot as to be representative of that lot. (Hardness and grain size required only on the products as specified in Tables 3 and 4.)

10. Number of Tests

10.1 *Chemical Analysis* — One test per lot.

10.2 *Mechanical Properties* — One test per lot.

TABLE 5
PERMISSIBLE VARIATIONS IN THICKNESS AND OVERWEIGHT OF RECTANGULAR PLATES

Specified Thickness, in. (mm)	Permissible Excess in Average Weight,[B,C] per Square Foot of Plates for Widths Given in Inches (Millimetres) Expressed in Percentage of Nominal Weights									
	Under 48 (1220)	48 to 60 (1220 to 1520), excl	60 to 72 (1520 to 1830), excl	72 to 84 (1830 to 2130), excl	84 to 96 (2130 to 2440), excl	96 to 108 (2440 to 2740), excl	108 to 120 (2740 to 3050), excl	120 to 132 (3050 to 3350), excl	132 to 144 (3350 to 3660), excl	144 to 160 (3660 to 4070), incl
3/16 to 5/16 (4.8 to 7.9), excl	9.0	10.5	12.0	13.5	15.0	16.5	18.0	...	...	...
5/16 to 3/8 (7.9 to 9.5), excl	7.5	9.0	10.5	12.0	13.5	15.0	16.5	18.8	...	...
3/8 to 7/16 (9.5 to 11.1), excl	7.0	7.5	9.0	10.5	12.0	13.5	15.0	16.5	18.0	19.5
7/16 to 1/2 (11.1 to 12.7), excl	6.0	7.0	7.5	9.0	10.5	12.0	13.5	15.0	16.5	18.0
1/2 to 5/8 (12.7 to 15.9), excl	5.0	6.0	7.0	7.5	9.0	10.5	12.0	13.5	15.0	16.5
5/8 to 3/4 (15.9 to 19.0), excl	4.5	5.5	6.0	7.0	7.5	9.0	10.5	12.0	13.5	15.0
3/4 to 1 (19.0 to 25.4), excl	4.0	4.5	5.5	6.0	7.0	7.5	9.0	10.5	12.0	13.5
1 to 2 (25.4 to 50.8), incl	4.0	4.0	4.5	5.5	6.0	7.0	7.5	9.0	10.5	12.0

NOTE — All plates shall be ordered to thickness and not to weight per square foot. No plates shall vary more than 0.01 in. (0.3 mm) under the thickness ordered, and the overweight of each lot[A] in each shipment shall not exceed the amount given in the table. Spot grinding is permitted to remove surface imperfections, such spots not to exceed 0.01 in. (0.3 mm) under the specified thickness.

[A] The term "lot" applied to this table means all of the plates of each group width and each group thickness.
[B] The permissible overweight for lots of circular and sketch plates shall be 25% greater than the amounts given in this table.
[C] The weight of individual plates shall not exceed the nominal weight by more than 1 1/4 times the amount given in the table and Footnote *B*.

TABLE 6
PERMISSIBLE VARIATIONS IN THICKNESS FOR RECTANGULAR PLATES OVER 2 in. (51.0 mm) IN THICKNESS

	Permissible Variations, in. (mm), over Specififed Thickness for Widths Given, in. (mm)					
Specified Thickness, in. (mm)	To 36 (915), excl	36 to 60 (915 to 1520), excl	60 to 84 (1520 to 2130), excl	84 to 120 (2130 to 3050), excl	120 to 132 (3050 to 3350), excl	132 (3350) and over
Over 2 to 3 (51.0 to 76.0), excl	1/16 (1.6)	3/32 (2.4)	7/64 (2.8)	1/8 (3.2)	1/8 (3.2)	9/64 (3.6)
3 to 4 (76.0 to 102.0), incl	5/64 (2.0)	3/32 (2.4)	7/64 (2.8)	1/8 (3.2)	1/8 (3.2)	9/64 (3.6)

NOTE — Permissible variation under specified thickness, 0.01 in. (0.3 mm).

TABLE 7
PERMISSIBLE VARIATIONS IN THICKNESS OF SHEET AND STRIP [PERMISSIBLE VARATIONS, PLUS AND MINUS, IN THICKNESS, in. (mm), FOR WIDTHS GIVEN, in. (mm)]

	Sheet[A]			
	Hot-Rolled		Cold-Rolled	
Specified Thickness, in. (mm)	48 (1220) and Under	Over 48 to 60 (1220 to 1520), incl	48 (1220) and Under	Over 48 to 60 (1220 to 1520), incl
0.018 to 0.025 (0.5 to 0.6), incl	0.003 (0.08)	0.004 (0.10)	0.002 (0.05)	0.003 (0.08)
Over 0.025 to 0.034 (0.6 to 0.9), incl	0.004 (0.10)	0.005 (0.13)	0.003 (0.08)	0.004 (0.10)
Over 0.034 to 0.043 (0.9 to 1.1), incl	0.005 (0.13)	0.006 (0.15)	0.004 (0.10)	0.005 (0.13)
Over 0.043 to 0.056 (1.1 to 1.4), incl	0.005 (0.13)	0.006 (0.15)	0.004 (0.10)	0.005 (0.13)
Over 0.056 to 0.070 (1.4 to 1.8), incl	0.006 (0.15)	0.007 (0.18)	0.005 (0.13)	0.006 (0.15)
Over 0.070 to 0.078 (1.8 to 2.0), incl	0.007 (0.18)	0.008 (0.20)	0.006 (0.15)	0.007 (0.18)
Over 0.078 to 0.093 (2.0 to 2.4), incl	0.008 (0.20)	0.009 (0.23)	0.007 (0.18)	0.008 (0.20)
Over 0.093 to 0.109 (2.4 to 2.8), incl	0.009 (0.23)	0.010 (0.25)	0.007 (0.18)	0.009 (0.23)
Over 0.109 to 0.125 (2.8 to 3.2), incl	0.010 (0.25)	0.012 (0.31)	0.008 (0.20)	0.010 (0.25)
Over 0.125 to 0.140 (3.2 to 3.6), incl	0.012 (0.31)	0.014 (0.36)	0.008 (0.20)	0.010 (0.25)
Over 0.140 to 0.171 (3.6 to 4.3), incl	0.014 (0.36)	0.016 (0.41)	0.009 (0.23)	0.012 (0.31)
Over 0.171 to 0.187 (4.3 to 4.8), incl	0.015 (0.38)	0.017 (0.43)	0.010 (0.25)	0.013 (0.33)
Over 0.187 to 0.218 (4.8 to 5.5), incl	0.017 (0.43)	0.019 (0.48)	0.011 (0.28)	0.015 (0.38)
Over 0.218 to 0.234 (5.5 to 5.9), incl	0.018 (0.46)	0.020 (0.51)	0.012 (0.31)	0.016 (0.41)
Over 0.234 to 0.250 (5.9 to 6.4), incl	0.020 (0.51)	0.022 (0.56)	0.013 (0.33)	0.018 (0.46)

	Cold-Rolled Strip[A, B]
Specified Thickness, in. (mm)	Widths 12 in. (305 mm) and under, plus and minus
Up to 0.050 (1.3), incl	0.0015 (0.04)
Over 0.050 to 0.093 (1.3 to 2.4), incl	0.0025 (0.06)
Over 0.093 to 0.125 (2.4 to 3.2), incl	0.004 (0.10)

[A] Measured 3/8 in. (9.5 mm) or more from either edge except for strip under 1 in. (25.4 mm) in width which is measured at any place.
[B] Standard sheet tolerances apply for thicknesses over 0.125 in. (3.2 mm) and for all thicknesses of strip over 12 in. (305 mm) wide.

TABLE 8
PERMISSIBLE VARIATIONS IN WIDTH[A] OF SHEARED, PLASMA-TORCH-CUT, AND ABRASIVE-CUT RECTANGULAR PLATE[B, C]

	Permissible Variations in Widths for Widths Given, in. (mm)									
	Up to 30 (760), incl		Over 30 to 72 (760 to 1830), incl		Over 72 to 108 (1830 to 2740), incl		Over 108 to 144 (2740 to 3660), incl		Over 144 to 160 (3660 to 4070), incl	
Specified Thickness	+	−	+	−	+	−	+	−	+	−
Inches										
Sheared:[D]										
3/16 to 5/16, excl	3/16	1/8	1/4	1/8	3/8	1/8	1/2	1/8	...	...
5/16 to 1/2, excl	1/4	1/8	3/8	1/8	3/8	1/8	1/2	1/8	5/8	1/8
1/2 to 3/4, excl	3/8	1/8	3/8	1/8	1/2	1/8	5/8	1/8	3/4	1/8
3/4 to 1, excl	1/2	1/8	1/2	1/8	5/8	1/8	3/4	1/8	7/8	1/8
1 to 1 1/4, incl	5/8	1/8	5/8	1/8	3/4	1/8	7/8	1/8	1	1/8
Abrasive-cut:[E, F]										
3/16 to 1 1/4, incl	1/8	1/8	1/8	1/8	1/8	1/8	1/8	1/8	1/8	1/8
Over 1 1/4 to 2 3/4, incl	3/16	1/8	3/16	1/8	3/16	1/8	3/16	1/8	3/16	1/8
Plasma-torch-cut:[G]										
3/16 to 2, excl	1/2	0	1/2	0	1/2	0	1/2	0	1/2	0
2 to 3, incl	5/8	0	5/8	0	5/8	0	5/8	0	5/8	0
Millimetres										
Sheared:[D]										
4.8 to 7.9, excl	4.8	3.2	6.4	3.2	9.5	3.2	12.7	3.2	...	...
7.9 to 12.7, excl	6.4	3.2	9.5	3.2	9.5	3.2	12.7	3.2	15.9	3.2
12.7 to 19.0, excl	9.5	3.2	9.5	3.2	12.7	3.2	15.9	3.2	19.0	3.2
19.0 to 25.4, excl	12.7	3.2	12.7	3.2	15.9	3.2	19.0	3.2	22.2	3.2
25.4 to 31.8, incl	15.9	3.2	15.9	3.2	19.0	3.2	22.2	3.2	25.4	3.2
Abrasive-cut:[E, F]										
4.8 to 31.8, incl	3.2	3.2	3.2	3.2	3.2	3.2	3.2	3.2	3.2	3.2
Over 31.8 to 69.8, incl	4.8	3.2	4.8	3.2	4.8	3.2	4.8	3.2	4.8	3.2
Plasma-torch-cut:[G]										
4.8 to 50.8, excl	12.7	0	12.7	0	12.7	0	12.7	0	12.7	0
50.8 to 76.2, incl	15.9	0	15.9	0	15.9	0	15.9	0	15.9	0

[A] Permissible variations in width for powder-cut or inert-arc-cut plate shall be as agreed upon between the manufacturer and the purchaser.

[B] Permissible variations in machined, powder-cut, or inert-arc-cut circular plate shall be as agreed upon between the manufacturer and the purchaser.

[C] Permissible variations in plasma-torch-cut sketch plates shall be as agreed upon between the manufacturer and the purchaser.

[D] The minimum sheared width is 10 in. (254 mm) for material 3/4 in. (19.0 mm) and under in thickness and 20 in. (508 mm) for material over 3/4 in. (19.0 mm) in thickness.

[E] The minimum abrasive-cut width is 2 in. (50.8 mm) and increases to 4 in. (101.6 mm) for thicker plates.

[F] These tolerances are applicable to lengths of 240 in. (6100 mm), max. For lengths over 240 in. (6100 mm), an additional 1/16 in. (1.6 mm) is permitted, both plus and minus.

[G] The tolerance spread shown for plasma-torch cutting may be obtained all on the minus side, or divided between the plus and minus side if so specified by the purchaser.

TABLE 9
PERMISSIBLE VARIATIONS IN DIAMETER FOR CIRCULAR PLATES

Specified Diameter, in. (mm)	Permissible Variations Over Specified Diameter for Thickness Given, in. (mm)[A] To 3/8 (9.5), incl
Sheared Plate	
20 to 32 (508 to 813), excl	1/4 (6.4)
32 to 84 (813 to 2130), excl	5/16 (7.9)
84 to 108 (2130 to 2740), excl	3/8 (9.5)
108 to 140 (2740 to 3580), incl	7/16 (11.1)

Plasma-Torch-Cut Plate[B]

Specified Diameter, in. (mm)	Thickness, max, in. (mm)	Permissible Variations in Specified Diameter for Thickness Given, in. (mm)[C]: 3/16 to 2 (4.8 to 50.8), excl +	3/16 to 2 (4.8 to 50.8), excl −	2 to 3 (50.8 to 76.2), incl +	2 to 3 (50.8 to 76.2), incl −
19 to 20 (483 to 508), excl	3 (76.2)	1/2 (12.7)	0	5/8 (15.9)	0
20 to 22 (508 to 559), excl	2 3/4 (69.8)	1/2 (12.7)	0	5/8 (15.9)	0
22 to 24 (559 to 610), excl	2 1/2 (63.5)	1/2 (12.7)	0	5/8 (15.9)	0
24 to 28 (610 to 711), excl	2 1/4 (57.3)	1/2 (12.7)	0	5/8 (15.9)	0
28 to 32 (711 to 812), excl	2 (50.8)	1/2 (12.7)	0	5/8 (15.9)	0
32 to 34 (812 to 864), excl	1 3/4 (44.5)	1/2 (12.7)	0	...	...
34 to 38 (864 to 965), excl	1 1/2 (38.1)	1/2 (12.7)	0	...	...
38 to 40 (965 to 1020), excl	1 1/4 (31.8)	1/2 (12.7)	0	...	...
40 to 140 (1020 to 3560), incl	3 (76.2)	1/2 (12.7)	0	5/8 (15.9)	0

[A] No permissible variations under.
[B] Permissible variations in plasma-torch-cut sketch plates shall be as agreed upon between the manufacturer and the purchaser.
[C] The tolerance spread shown may also be obtained all on the minus side or divided between the plus and minus sides if so specified by the purchaser.

TABLE 10
PERMISSIBLE VARIATIONS IN WIDTH OF SHEET AND STRIP

Specified Thickness, in. (mm)	Specified Width, in. (mm)	Permissible Variations in Specified Width, in. (mm) +	Permissible Variations in Specified Width, in. (mm) −
Sheet			
Up to 0.250 (6.4)	all	0.125 (3.2)	0
Strip[A]			
Under 0.075 (1.9)	up to 12 (305), incl	0.007 (0.18)	0.007 (0.18)
	over 12 to 48 (305 to 1219), incl	0.062 (1.6)	0
0.075 to 0.100 (1.9 to 2.5), incl	up to 12 (305), incl	0.009 (0.23)	0.009 (0.23)
	over 12 to 48 (305 to 1219), incl	0.062 (1.6)	0
Over 0.100 to 0.125 (2.5 to 3.2), incl	up to 12 (305), incl	0.012 (0.30)	0.012 (0.30)
	over 12 to 48 (305 to 1219), incl	0.062 (1.6)	0
Over 0.125 to 0.160 (3.2 to 4.1), incl	up to 12 (305), incl	0.016 (0.41)	0.016 (0.41)
	over 12 to 48 (305 to 1219), incl	0.062 (1.6)	0
Over 0.160 to 0.187 (4.1 to 4.7), incl	up to 12 (305), incl	0.020 (0.51)	0.020 (0.51)
	over 12 to 48 (305 to 1219), incl	0.062 (1.6)	0
Over 0.187 to 0.250 (4.7 to 6.4), incl	up to 12 (305), incl	0.062 (1.6)	0.062 (1.6)
	over 12 to 48 (305 to 1219), incl	0.062 (1.6)	0.062 (1.6)

[A] Rolled-round or square-edge strip in thicknesses of 0.071 to 0.125 in. (1.8 to 3.2 mm), inclusive, in widths 3 in. (76.2 mm) and under, shall have permissible width variations of ±0.005 in. (±0.130 mm). Permissible variations for other sizes shall be as agreed upon between the manufacturer and the purchaser.

TABLE 11
PERMISSIBLE VARIATIONS IN LENGTH[A] OF SHEARED, PLASMA-TORCH-CUT,[B] AND ABRASIVE-CUT RECTANGULAR PLATE[C]

	Permissible Variations in Length for Lengths Given, in. (mm)															
	Up to 60 (1520), incl		Over 60 to 96 (1520 to 2440), incl		Over 96 to 120 (2440 to 3050), incl		Over 120 to 240 (3050 to 6096), incl		Over 240 to 360 (6096 to 9144), incl		Over 360 to 450 (9144 to 11 430), incl		Over 450 to 540 (11 430 to 13 716), incl		Over 540 (13 716), incl	
Specified Thickness	+	−	+	−	+	−	+	−	+	−	+	−	+	−	+	−
Inches																
Sheared:[D]																
3/16 to 5/16, excl	3/16	1/8	1/4	1/8	3/8	1/8	1/2	1/8	5/8	1/8	3/4	1/8	7/8	1/8	...	...
5/16 to 1/2, excl	3/8	1/8	1/2	1/8	1/2	1/8	1/2	1/8	5/8	1/8	3/4	1/8	7/8	1/8	1	1/8
1/2 to 3/4, excl	1/2	1/8	1/2	1/8	5/8	1/8	5/8	1/8	3/4	1/8	7/8	1/8	1 1/8	1/8	1 3/8	1/8
3/4 to 1, excl	5/8	1/8	5/8	1/8	5/8	1/8	3/4	1/8	7/8	1/8	1 1/8	1/8	1 3/8	1/8	1 5/8	1/8
1 to 1 1/4, incl	3/4	1/8	3/4	1/8	3/4	1/8	7/8	1/8	1 1/8	1/8	1 3/8	1/8	1 5/8	1/8	...	...
Abrasive-cut:[E]																
3/16 to 1 1/4, incl	1/8	1/8	1/8	1/8	1/8	1/8	1/8	1/8	1/8	1/8	1/8	1/8	...	...	...	...
Over 1 1/4 to 2 3/4, incl	3/16	1/8	3/16	1/8	3/16	1/8	3/16	1/8	3/16	1/8	3/16	1/8	...	...	...	...
Plasma-torch-cut:[F]																
3/16 to 2, excl	1/2	0	1/2	0	1/2	0	1/2	0	1/2	0	1/2	0	1/2	0	1/2	0
2 to 3, incl	5/8	0	5/8	0	5/8	0	5/8	0	5/8	0	5/8	0	5/8	0	5/8	0
Millimetres																
Sheared:[D]																
4.8 to 7.9, excl	4.8	3.2	6.4	3.2	9.5	3.2	12.7	3.2	15.9	3.2	19.0	3.2	22.2	3.2	...	...
7.9 to 12.7, excl	9.5	3.2	12.7	3.2	12.7	3.2	12.7	3.2	15.9	3.2	19.0	3.2	22.2	3.2	25.4	3.2
12.7 to 19.0, excl	12.7	3.2	12.7	3.2	15.9	3.2	15.9	3.2	19.0	3.2	22.2	3.2	28.6	3.2	34.9	3.2
19.0 to 25.4, excl	15.9	3.2	15.9	3.2	15.9	3.2	19.0	3.2	22.2	3.2	28.6	3.2	34.9	3.2	41.2	3.2
25.4 to 31.8, incl	19.0	3.2	19.0	3.2	19.0	3.2	22.2	3.2	28.6	3.2	34.9	3.2	41.2	3.2	...	...
Abrasive-cut:[E]																
4.8 to 31.8, incl	3.2	3.2	3.2	3.2	3.2	3.2	3.2	3.2	3.2	3.2	3.2	3.2	...	...	...	...
Over 31.8 to 69.9, incl	4.8	3.2	4.8	3.2	4.8	3.2	4.8	3.2	4.8	3.2	4.8	3.2	...	...	...	...
Plasma-torch-cut:[F]																
4.8 to 50.8, excl	12.7	0	12.7	0	12.7	0	12.7	0	12.7	0	12.7	0	12.7	0	12.7	0
50.8 to 76.2, incl	15.9	0	15.9	0	15.9	0	15.9	0	15.9	0	15.9	0	15.9	0	15.9	0

[A] Permissible variations in length for powder-cut or inert-arc-cut plate shall be as agreed upon between the manufacturer and the purchaser.
[B] The tolerance spread shown for plasma-torch-cutting may be obtained all on the minus side, or divided between the plus and minus sides if so specified by the purchaser.
[C] Permissible variations in machined, powder- or inert-arc-cut circular plate shall be as agreed upon between the manufacturer and the purchaser.
[D] The minimum sheared lengths is 10 in. (254 mm).
[E] Abrasive-cut applicable to a maximum length of 144 to 400 in. (3658 to 10,160 mm) depending on the thickness and width ordered.
[F] The tolerance spread shown for plasma-torch-cut sketch plates shall be as agreed upon between the manufacturer and the purchaser.

TABLE 12
PERMISSIBLE VARIATIONS FROM FLATNESS OF RECTANGULAR, CIRCULAR, AND SKETCH PLATES

Specified Thickness	Permissible Variations from a Flat Surface for Thickness and Widths Given, in. (mm)								
	To 48 (1220), excl	48 to 60 (1220 to 1520), excl	60 to 72 (1520 to 1830), excl	72 to 84 (1830 to 2130), excl	84 to 96 (2130 to 2440), excl	96 to 108 (2440 to 2740), excl	108 to 120 (2740 to 3050), excl	120 to 144 (3050 to 3660), excl	144 (3660) and over
				Inches					
3/16 to 1/4, excl	3/4	1 1/16	1 1/4	1 3/8	1 5/8	1 5/8	...	...	...
1/4 to 3/8, excl	11/16	3/4	15/16	1 1/8	1 3/8	1 7/16	1 9/16	1 7/8	...
3/8 to 1/2, excl	1/2	9/16	11/16	3/4	15/16	1 1/8	1 1/4	1 7/16	1 3/4
1/2 to 3/4, excl	1/2	9/16	5/8	5/8	13/16	1 1/8	1 1/8	1 1/8	1 3/8
3/4 to 1, excl	1/2	9/16	5/8	5/8	3/4	13/16	15/16	1	1 1/8
1 to 2, excl	1/2	9/16	9/16	9/16	11/16	11/16	11/16	3/4	1
2 to 4, incl	1/4	5/16	3/8	7/16	1/2	9/16	5/8	3/4	7/8
				Millimetres					
4.8 to 6.4, excl	19.0	27.0	31.7	34.9	41.3	41.3	...	...	...
6.4 to 9.5, excl	17.5	19.0	23.8	28.6	35.0	36.5	39.7	47.6	...
9.5 to 12.7, excl	12.7	14.3	17.5	19.0	23.8	28.6	31.7	35.0	44.4
12.7 to 19.0, excl	12.7	14.3	15.9	15.9	20.6	28.6	28.6	28.6	34.9
19.0 to 25.4, excl	12.7	14.3	15.9	15.9	19.0	20.6	23.8	25.4	28.6
25.4 to 50.8, excl	12.7	14.3	14.3	14.3	17.5	17.5	17.5	19.0	25.4
50.8 to 101.6, incl	6.4	7.9	9.5	11.1	12.7	14.3	15.9	19.0	22.2

NOTE 1 — Permissible variations apply to plates up to 12 ft (366 cm) in length, or to any 12 ft or longer plates.
NOTE 2 — If the longer dimension is under 36 in. (914 mm), the permissible variation is not greater than 1/4 in. (6.4 mm).
NOTE 3 — The shorter dimension specified is considered the width, and the permissible variation in flatness across the width does not exceed the tubular amount of that dimension.
NOTE 4 — The maximum deviation from a flat surface does not customarily exceed the tabular tolerance for the longer dimension specified.

10.3 *Hardness* — One test per lot. (Required only as specified in Tables 3 and 4.)

10.4 *Grain Size* — One test per lot. (Required only as specified in Table 4.)

11. Specimen Preparation

11.1 Tension test specimens shall be taken from material in the final condition (temper) and tested transverse to the direction of rolling when width will permit.

11.2 Tension test specimens shall be any of the standard or subsize specimens shown in Test Methods E 8.

11.3 In the event of disagreement, referee specimens shall be as follows:

11.3.1 Full thickness of the material machined to the form and dimensions shown for the sheet-type specimen in Test Methods E 8 for material under 1/2 in. (12.7 mm) in thickness.

11.3.2 The largest possible round specimen shown in Test Methods E 8 for material 1/2 in. (12.7 mm) and over.

12. Test Methods

12.1 Determine the chemical composition, mechanical, and other properties of the material as enumerated in this specification, in case of disagreement, in accordance with the following methods:

Test	ASTM Designation
Chemical analysis	E 76
Tension	E 8
Brinell hardness	E 10
Rockwell hardness	E 18
Grain size	E 112
Rounding	E 29
Rounding procedure	E 29
Spring-back	F 155

12.2 The measurement of the average grain size may be carried out by the planimetric method, the comparison method, or the intercept method described in Test Methods E 112. In case of dispute, the "referee" method for determining the average grain size shall be the planimetric method.

12.3 For purposes of determining compliance with the specified limits for requirements of the properties

listed in the following table, an observed value or a calculated value shall be rounded as indicated, in accordance with the rounding method of Practice E 29.

Test	Rounded Unit for Observed or Calculated Value
Chemical composition, hardness, and tolerances (when expressed in decimals)	Nearest unit in the last right-hand place of figures of the specified limit. If two choices are possible, as when the digits dropped are exactly a 5 or a 5 followed only by zeros, choose the one ending in an even digit, with zero defined as an even digit.
Tensile strength and yield strength	Nearest 1000 psi (6.9 MPa)
Elongation	Nearest 1%

Test	Rounded Unit for Observed or Calculated Value
Grain Size:	
0.0024 in. (0.06 mm) or larger less than 0.0024 in. (0.06 mm)	Nearest multiple of 0.0002 in. (0.005 mm)
	Nearest multiple of 0.0001 in. (0.002 mm)

13. Inspection

13.1 Inspection of the material shall be as agreed upon between the purchaser and the supplier as part of the purchase contract.

14. Rejection and Rehearing

14.1 Material that fails to conform to the requirements of this specification may be rejected. Rejection should be reported to the producer or supplier promptly and in writing. In case of dissatisfaction with the results of the test, the producer or supplier may make claim for a rehearing.

15. Certification

15.1 When specified in the purchase order or contract, a manufacturer's certification shall be furnished to the purchaser stating that material has been manufactured, tested, and inspected in accordance with this specification, and that the test results on representative samples meet specification requirements. When specified in the purchase order or contract, a report of the test results shall be furnished.

16. Product Marking

16.1 Each plate, sheet, or strip shall be marked on one face with the specification number, alloy, condition (temper), heat number, manufacturer's identification, and size. The markings shall not have a deleterious effect on the material or its performance and shall be sufficiently stable to withstand normal handling.

16.2 When applicable, each bundle or shipping container shall be marked with the name of the material, condition (temper), this specification number, alloy, size, consignor and consignee address, contract or order number, and such other information as may be defined in the contract or order.

APPENDIX

(Nonmandatory Information)

X1. CONDITIONS AND FINISHES

X1.1 Scope

X1.1.1 This appendix lists the conditions and finishes in which plate, sheet, and strip are normally supplied. These are subject to change and the manufacturer should be consulted for the latest information available.

X1.2 Plate, Hot-Rolled

X1.2.1 *Annealed* — Soft with an oxide surface and suitable for heavy cold forming. Available with a descaled surface, when so specified.

X1.2.2 *As-Rolled* — With an oxide surface. Available with a descaled surface, when so specified. Suitable for flat work, mild forming, or tube sheets. When intended for tube sheets, specify that plates are to be specially flattened. When intended for hot forming, this should be indicated on the purchase order so that the manufacturer may select appropriate material.

X1.3 Plate, Cold-Rolled

X1.3.1 *Annealed* — Soft with an oxide surface; available with a descaled surface when so specified.

X1.4 Sheet, Hot-Rolled

X1.4.1 *Annealed, and Pickled* — Soft with a pickled matte finish. Properties similar to X1.5.1 but with broader thickness tolerances. Not suggested for applications where the finish of a cold-rolled sheet is considered essential, or for deep drawing or spinning.

X1.5 Sheet and Strip, Cold-Rolled

X1.5.1 *Annealed* — Soft with a pickled or bright annealed finish.

X1.5.2 *Deep-Drawing or Spinning Quality* — Similar to X1.5.1, except furnished to controlled hardness and grain size and lightly leveled.

X1.5.3 *Skin Hard* — Similar to X1.5.1 but given a light cold reduction to hardness range shown in Table 3.

X1.5.4 *Quarter-Hard* — Cold rolled to the hardness range indicated in Table 3, bright finish. Out-of-flatness must be expected and will vary with temper and thickness.

X1.5.5 *Half-Hard* — Cold rolled to the hardness range indicated in Table 3, bright finish. Out-of-flatness must be expected and will vary with temper and thickness.

X1.5.6 *Three-Quarter Hard* — Cold rolled to the hardness range indicated in Table 3, bright finish. Out-of-flatness must be expected and will vary with temper and thickness.

X1.5.7 *Hard* — Cold rolled to the tensile requirements indicated in Table 3, bright finish. Out-of-flatness must be expected and will vary with temper and thickness.

X1.5.8 *Spring Temper* — Cold rolled to the minimum hardness indicated in Table 3, bright finish. Out-of-flatness must be expected and will vary with temper and thickness.

SPECIFICATION FOR SEAMLESS BRASS TUBE

SB-135

(Identical with ASTM Specification B 135-96 for Copper Alloy UNS No. C23000 only in the annealed temper, except for 8.1, the deletion of Supplementary Requirements for government procurement, and editorial differences.)

1. Scope

1.1 This specification covers seamless round and rectangular including square copper alloy tube in straight lengths. The alloy shall have the following nominal composition:

Copper Alloy UNS No.	Previously Used Designation[A]	Nominal Composition, % Copper	Zinc
C23000	1	85.0	15.0

[A] Alloy Designations of ASTM Specification B 135-63 which was published in the *1966 Book of ASTM Standards,* Part 5.

NOTE 1 — A complete metric companion to Specification B 135 has been developed—B 135M; therefore, no metric equivalents are presented in this specification.

1.2 *Warning* — Mercury is a definite health hazard in use and disposal. (See 10.1.)

2. Referenced Documents

2.1 The following documents of the issue in effect on date of material purchase form a part of this specification to the extent referenced herein:

2.2 *ASTM Standards:*

B 153 Test Method for Expansion (Pin Test) of Copper and Copper-Alloy Pipe and Tubing

B 154 Test Method for Mercurous Nitrate Test for Copper and Copper Alloys

B 601 Practice for Temper Designations for Copper and Copper Alloys — Wrought and Cast

E 243 Practice for Electromagnetic (Eddy-Current) Testing of Seamless Copper and Copper-Alloy Tubes

E 527 Practice for Numbering Metals and Alloys (UNS)

2.3 *ASME Standard:*

SB-251 Specification for General Requirements for Wrought Seamless Copper and Copper-Alloy Tube

3. Terminology

3.1 *Definition of Term Specific to This Standard:*

3.1.1 *capable of* — as used in this specification, the test need not be performed by the producer of the material. However, should subsequent testing by the purchaser establish that the material does not meet these requirements, the material shall be subject to revision.

4. Order Information

4.1 Orders for material under the specification shall include the following information:

4.1.1 Alloy (Section 1),

4.1.2 Temper (Section 7),

4.1.3 Dimensions: diameter or distance between parallel surfaces and wall thickness (see 12.2 and 12.3),

4.1.4 Length (see 12.4),

4.1.5 Mercurous nitrate test, if required (Section 10),

4.1.6 Total length of each size,

4.1.7 Hydrostatic pressure test, when specified,

4.1.8 Pneumatic test, when specified.

5. General Requirements

5.1 Material furnished under the specification shall conform to the applicable requirements of the current edition of SB-251.

6. Chemical Composition

6.1 The material shall conform to the chemical requirements specified in Table 1.

6.2 These specification limits do not preclude the presence of other elements. Limits for unnamed elements

TABLE 1
CHEMICAL REQUIREMENTS

Copper Alloy UNS No.	Copper, %	Lead, %	Iron, max %	Zinc, %
C23000	84.0–86.0	0.05 max	0.05	remainder

TABLE 2
MECHANICAL PROPERTY REQUIREMENTS OF ANNEALED TEMPER TUBE

Copper Alloy UNS No.	Temper Designation[A]		Wall Thickness, in.	Rockwell Hardness[B]		Average Grain Size, (mm)	
	Standard	Former		Scale	Max	Min	Max
C23000	060	soft anneal	up to 0.045, incl	30T	36	0.025	0.060
			over 0.045	F	75	0.025	0.060
	050	light anneal	up to 0.045, incl	30T	39	[C]	0.035
			over 0.045	F	85	[C]	0.035

[A] Standard designations defined in Practice B 601.

[B] Rockwell hardness values shall apply only to tubes having a wall thickness of 0.015 in. or over and to round tubes having an inside diameter of $^5/_{16}$ in. or over and to rectangular including square tubes having an inside major distance between parallel surfaces of $^3/_{16}$ in. or over. For all other tube no Rockwell hardness values shall apply. Rockwell hardness tests shall be made on the inside surface of the tube. When suitable equipment is not available for determining the specified Rockwell hardness, other Rockwell scales and values are permitted to be specified subject to agreement between the manufacturer and the purchaser.

[C] Although no minimum grain size is specified, the product must nevertheless have a fully recrystallized grain structure.

are to be established by agreement between manufacturer or supplier and purchaser.

6.2.1 For copper alloys in which zinc is specified as the remainder, either copper or zinc shall be permitted to be taken as the difference between the sum of all the elements analyzed and 100%.

6.2.1.1 When all the elements in Table 1 are analyzed, their sum shall be as shown in the following table.

Copper Alloy UNS No.	Copper Plus Named Elements, % min.
C23000	99.8

7. Temper

7.1 *Annealed Tempers, O* — The tempers of annealed tube shall be designated as light anneal (O50) and soft anneal (O60) (Table 2).

NOTE 2 — Tube of Copper Alloy UNS No. C23000 shall have in the annealed condition a minimum tensile strength of 40 ksi and a minimum yield strength of 12 ksi at 0.5% extension under load, in which case the provisions for grain size and Rockwell hardness in 8.1 do not apply.

8. Mechanical Properties

8.1 *Annealed Temper* — Tube shall conform to the grain size and Rockwell hardness limits prescribed in Table 2.

9. Expansion Test for Round Tube

9.1 Tube ordered in the annealed (O) condition, selected for test, shall be capable of withstanding in accordance with Test Method B 153 an expansion of the outside diameter in the following amount:

Outside Diameter, in.	Expansion of Outside Diameter, %
$^3/_4$ and under	20
Over $^3/_4$	15

The expanded tube shall show no cracking or rupture visible to the unaided eye. Tube ordered in the drawn (H) condition is not subject to this test.

NOTE 3 — The term "unaided eye," as used herein, permits the use of corrective spectacles necessary to obtain normal vision.

9.2 As an alternative to the expansion test for tube over 4 in. in diameter in the annealed condition, a section

4 in. in length shall be cut from the end of one of the lengths for a flattening test. This 4-in. test specimen shall be flattened so that a gage set at three times the wall thickness will pass over the tube freely throughout the flattened part. The tube so tested shall develop no cracks or flaws visible to the unaided eye (Note 3) as a result of this test. In making the flattening test the elements shall be slowly flattened by one stroke of the press.

10. Mercurous Nitrate Test

10.1 *Warning* — Mercury is a definite health hazard and therefore equipment for the detection and removal of mercury vapor produced in volatilization is recommended. The use of rubber gloves in testing is advisable.

10.2 When specifically required, test specimens 6 in. in length of annealed temper shall withstand, after proper cleaning, an immersion for 30 min without cracking in the standard mercurous nitrate solution prescribed in Test Method B 154. Immediately after removal from the solution, the specimen shall be wiped free of excess mercury and examined for cracks.

11. Nondestructive Testing

11.1 Unless nondestructive testing has been waived, tubes shall be subjected to a nondestructive test. The manufacturer shall have the option of selecting the nondestructive test that is most suitable for the tube size and the application.

11.1.1 Eddy-current testing is the standard nondestructive test, and all tubes of appropriate size shall be eddy-current tested in accordance with 11.2.

11.1.2 Tubes that are not of a size suitable for eddy-current test capabilities shall be tested by the hydrostatic test as described in 11.3.1, or by the pneumatic test as described in 11.3.2.

11.2 *Eddy-Current Test* — Each tube up to $3\frac{1}{8}$ in. in outside diameter shall be subjected to an eddy-current test. Testing shall follow the procedure of Practice E 243, except the determination of "end effect" is not required. Tubes shall be passed through an eddy-current test unit adjusted to provide information on the suitability of the tube for the intended application.

11.2.1 Notch-depth standards rounded to the nearest 0.001 in. shall be 22% of the nominal wall thickness. The notch depth tolerance shall be ±0.0005 in. Alternatively, at the option of the manufacturer who uses speed insensitive eddy-current units that are equipped so that a fraction of the maximum unbalance signal is able to be selected, the following percent maximum unbalance signals may be used.

Standard Tube Size, in.	Maximum Percent Unbalance Signal Magnitude
Up to and including $\frac{3}{8}$	0.2
$\frac{1}{2}$ to 2 incl	0.3
Over 2 to 3 incl	0.4

11.2.2 Tubes that do not actuate the signalling device of the eddy-current testers shall be considered as conforming to the requirements of this test. Tubes with discontinuities indicated by the testing unit are permitted, at the option of the manufacturer, to be re-examined or retested to determine whether the discontinuity is cause for rejection. Signals that are found to have been caused by minor mechanical damage, soil, or moisture, shall not be cause for rejection of the tubes provided the tube dimensions are still within prescribed limits and the tube is suitable for its intended application.

11.3 A pressure test is permitted to be specified for tube sizes over $3\frac{1}{8}$ in. in outside diameter or tube of dimensions beyond the capabilities of the eddy-current test apparatus or as an alternative to the eddy-current test. The purchaser shall have the option to specify either a hydrostatic test in 11.3.1 or the pneumatic test in 11.3.2. When, in the case where subsequent testing by the purchaser establishes that the material does not meet these requirements, then the tubes shall be subject to rejection.

11.3.1 *Hydrostatic Test* — When specified, the tube shall stand, without showing evidence of leakage, an internal hydrostatic pressure sufficient to subject the material to a fiber stress of 7000 psi, determined by the following equation for thin hollow cylinders under tension:

$$P = 2St/(D - 0.8t)$$

where:

P = hydrostatic pressure, psi,
t = wall thickness of the material, in.,
D = outside diameter of the material, in., and
S = allowable stress of the material.

11.3.2 *Pneumatic Test* — When specified, the tube shall be subjected to an internal air pressure of 60 psig minimum for 5 s without showing evidence of leakage. The test method used shall permit easy detection of any leakage, such as having the material under water, or by the pressure-differential method. Any evidence of leakage shall be cause for rejection.

12. Dimensions and Permissible Variations

12.1 The dimensions and tolerances for material covered by this specification shall be as prescribed in the

current edition of SB-251, with particular reference to Section 5 and the following tables of that specification:

12.2 *Wall Thickness Tolerances* — See 5.2, Tables 1 and 6.

12.3 *Tolerances for Diameter or Distance Between Parallel Surfaces* — See 5.3, Tables 2 and 7.

12.4 *Length Tolerances* — See 5.5, Tables 3 and 4.

12.5 *Roundness* — See 5.4.

12.6 *Squareness of Cut* — See 5.6.

12.7 *Straightness Tolerances* — For round tubes, see 5.7.1, Table 5. For rectangular including square tubes, see 5.7.2.

12.8 *Corner Radius for Rectangular Including Square Tubes* — See 5.8, Table 8.

12.9 *Twist Tolerances for Rectangular and Square Tubes* — See 5.9.

13. Workmanship, Finish, and Appearance

13.1 Annealed tube shall be either bright annealed or acid cleaned after final annealing operations.

14. Keywords

14.1 brass tube; seamless brass tube; seamless tube

SPECIFICATION FOR ALUMINUM-BRONZE SAND CASTINGS

SB-148

(Identical with ASTM Specification B148-97$^{\epsilon 1}$ for the alloys and tempers covered. Supplementary Requirements have been deleted, certification has been made mandatory, and weld repair requirements in accordance with ASME Section IX have been added.)

1. Scope

1.1 This specification establishes requirements for sand castings produced from copper-base alloys having the alloy numbers, commercial designations, and nominal compositions shown in Table 1.

1.2 The values stated in inch-pound units shall be regarded as the standard. Metric values given in parentheses are for information only.

2. Referenced Documents

2.1 The following documents of the issue in effect on date of material purchase form a part of this specification to the extent referenced herein:

2.2 *ASTM Standards:*

B 208 Practice for Preparing Tension Test Specimens for Copper Alloys for Sand, Permanent Mold, Centrifugal, and Continuous Castings

B 824 Specification for General Requirements for Copper Alloy Castings

E 10 Test Method for Brinell Hardness of Metallic Materials

E 18 Test Methods for Rockwell Hardness and Rockwell Superficial Hardness of Metallic Materials

E 527 Practice for Numbering Metals and Alloys (UNS)

2.3 *ASME Specification:*

SB-824 Specification for General Requirements for Copper Alloy Castings

3. General Requirements

3.1 Material furnished under this specification shall conform to the applicable requirements of Specification B 824.

4. Ordering Information

4.1 Orders for castings under this specification shall include the following information:

4.1.1 Quality of castings required,

4.1.2 Copper alloy number (Table 1) and temper (as-cast, heat treated, and so forth),

4.1.3 Specification title, number, and year of issue,

4.1.4 Pattern or drawing number and condition (cast, machined, and so forth),

4.1.5 Analysis of residual elements, if specified in the purchase order (Specification B 824),

4.1.6 Pressure test requirements, if specified in the purchase order (Specification B 824),

4.1.7 Soundness requirements, if specified in the purchase order (Specification B 824),

4.1.8 Certification (Specification B 824),

4.1.9 Test report, if specified in the purchase order (Specification B 824),

4.1.10 Witness inspection, if specified in the purchase order (Specification B 824),

4.1.11 Approval of weld procedure and records of repairs, if specified in the purchase order (Section 8),

4.1.12 ASME Boiler and Pressure Vessel Code application (9.2 and Section 11),

4.1.13 Castings for seawater service (5.3), and

4.1.14 Product marking, if specified in the purchase order (Specification B 824).

5. Materials and Manufacture

5.1 For better corrosion resistance in seawater applications, castings in Copper Alloy UNS No. C95800 shall

TABLE 1
NOMINAL COMPOSITIONS

Copper Alloy UNS No.	Old Designation	Commercial Designation	Nominal Composition %					
			Copper	Nickel	Iron	Aluminum	Silicon	Manganese
C95200	9A	Grade A	88.0	...	3.0	9.0	...	...
C95300[A]	9B	Grade B	89.0	...	1.0	10.0	...	...
C95400[A]	9C	Grade C	85.0	...	4.0	11.0	...	...
C95410[A]	...	...	84.0	2.0	4.0	10.0	...	...
C95500[A]	9D	Grade D	81.0	4.0	4.0	11.0	...	...
C95520[A]	...	...	78.5	5.5	5.0	11.0	...	...
C95600	9E	Grade E	91.0	...	...	7.0	2.0	...
C95700	9F	Grade F	75.0	2.0	3.0	8.0	...	12.0
C95800	...	...	81.3	4.5	4.0	9.0	...	1.2
C95820	...	...	79.0	5.2	4.5	9.5	...	1.0
C95900	...	...	87.5	...	4.5	13.0	...	...

[A] These grades respond to heat treatment.

TABLE 2
CHEMICAL REQUIREMENTS

Classification	Aluminum Bronze				Nickel Aluminum Bronze		Silicon Aluminum Bronze	Manganese-Nickel Aluminum Bronze	Nickel Aluminum Bronze		Aluminum Bronze
Copper Alloy UNS No.	C95200	C95300	C95400	C95410	C95500	C95520[A]	C95600	C95700	C95800	C95820[B]	C95900
	Composition, %										
Copper	86.0 min	86.0 min	83.0 min	83.0 min	78.0 min	74.5 min	88.0 min	71.0 min	79.0 min	77.5 min	remainder
Aluminum	8.5–9.5	9.0–11.0	10.0–11.5	10.0–11.5	10.0–11.5	10.5–11.5	6.0–8.0	7.0–8.5	8.5–9.5	9.0–10.0	12.0–13.5
Iron	2.5–4.0	0.8–1.5	3.0–5.0	3.0–5.0	3.0–5.0	4.0–5.5	...	2.0–4.0	3.5–4.5[C]	4.0–5.0	3.0–5.0
Manganese	...	...	0.50 max	0.50 max	3.5 max	1.5 max	...	11.0–14.0	0.8–1.5	1.5 max	1.5 max
Nickel (incl cobalt)	...	...	1.5 max	1.5–2.5	3.0–5.5	4.2–6.0	0.25 max	1.5–3.0	4.0–5.0[C]	4.5–5.8	0.5 max
Silicon	...	...	...	...	...	0.15 max	1.8–3.2	0.10 max	0.10 max	0.10 max	...
Lead	...	...	...	...	...	0.03 max	...	0.03 max	0.03 max	0.02 max	...

[A] Chromium shall be 0.05 max, cobalt 0.20 max, tin 0.25 max, and zinc 0.30 max.
[B] Zinc shall be 0.2 max and tin 0.02 max.
[C] Iron content shall not exceed the nickel content.

be given a temper anneal heat treatment at 1250 ± 50°F (675 ± 10°C) for 6 h minimum. Cooling shall be by the fastest means possible that will not cause excessive distortion or cracking. Propeller castings shall be exempt from this requirement.

5.2 Copper Alloy UNS Nos. C95300, C95400, C95410, and C95500 may be supplied in the heat-treated condition to obtain the higher mechanical properties shown in Table 3. Suggested heat treatments for these alloys and Copper Alloy UNS No. C95520 are given in Table 4. Actual practice may vary by manufacturer.

5.3 Copper Alloy UNS No. C95520 is used in the heat-treated condition only.

5.4 Copper Alloy UNS No. C95900 is normally supplied annealed between 1100°F (595°C) and 1300°F (705°C) followed by air cooling.

5.5 Copper Alloy UNS No. C95820 is supplied in the as-cast condition.

5.6 Separately cast test bar coupons representing castings made in Copper Alloy UNS Nos. C95300HT, C95400HT, C95410HT, C95500HT, C95520HT,

TABLE 3
MECHANICAL REQUIREMENTS

Classification	Aluminum Bronze As-Cast			Nickel Aluminum Bronze As-Cast		Silicon Aluminum Bronze	Manganese-Nickel Aluminum Bronze	Nickel Aluminum Bronze	Aluminum Bronze
Copper Alloy UNS No.	C95200	C95300	C95400 and C95410	C95500	C95820	C95600	C95700	C95800[A]	C95900[B]
Tensile strength, min, ksi[C] (MPa)[D]	65 (450)	65 (450)	75 (515)	90 (620)	94 (650)	60 (415)	90 (620)	85 (585)	... ...
Yield strength,[E] min, ksi[C] (MPa)[D]	25 (170)	25 (170)	30 (205)	40 (275)	39[F] (270)[F]	28 (195)	40 (275)	35 (240)	... ...
Elongation in 2 in. (50.8 mm), %	20	20	12	6	13	10	20	15	...
Brinell hardness No.[G] (3000-kg load)	110	110	150	190	...	...	...	...	...
Heat-Treated									
Copper Alloy UNS No.		C95300	C95400 and C95410	C95500	C95520[H]				
Tensile strength, min, ksi[C] (MPa)[D]	...	80 (550)	90 (620)	110 (760)	125 (862)	...	...	...	...
Yield strength,[E] min, ksi[C] (MPa)[D]	...	40 (275)	45 (310)	60 (415)	95[F] (655)[F]	...	...	...	...
Elongation in 2 in. (50.8 mm), %	...	12	6	5	2	...	...	...	...
Brinell hardness No.[G] (3000-kg load)	...	160	190	200	255[I]	...	...	...	241 min

[A] As cast or temper annealed.
[B] Normally supplied annealed between 1100 and 1300°F for 4 h followed by air cooling.
[C] ksi = 1000 psi.
[D] See Appendix X1.
[E] Yield strength shall be determined as the stress producing an elongation under load of 0.5%, that is, 0.01 in. (0.254 mm) in a gage length of 2 in. (50.8 mm).
[F] Yield strength at 0.2% offset, min, ksi[C] (MPa)[D].
[G] For information only.
[H] Copper Alloy UNS No. C95520 is used in the heat-treated condition only.
[I] Sand castings and sand cast test specimens shall be 25 HRC or equivalent minimum.

TABLE 4
SUGGESTED HEAT TREATMENTS

Copper Alloy UNS No.	Solution Treatment (Not Less Than 1 h Followed by Water Quench)	Annealing Treatment (Not Less Than 2 h Followed by Air Cool)
C95300	1585–1635°F (800–890°C)	1150–1225°F (620–660°C)
C95400	1600–1675°F (870–910°C)	1150–1225°F (620–660°C)
C95410 C95500 C95520	(2 h followed by water quench) 1600–1700°F (870–925°C)	925–1000°F (495–540°C)

C95800 temper annealed, and C95900 annealed shall be heat treated with the castings.

6. Chemical Composition

6.1 The castings shall conform to the chemical requirements shown in Table 2.

6.2 These specification limits do not preclude the presence of other elements. Limits may be established by agreement between manufacturer or supplier and purchaser for these unnamed elements. Copper may be given as remainder and may be taken as the difference between the sum of all elements analyzed and 100%. When all

the elements in the table are analyzed, their sum shall be as specified in the following table:

Copper Alloy UNS Number	Copper Plus Named Elements, min, %
C95200	99.0
C95300	99.0
C95400	99.5
C95410	99.5
C95500	99.5
C95520	99.5
C95600	99.0
C95700	99.5
C95800	99.5
C95820	99.2
C95900	99.5

7. Mechanical Properties

7.1 Mechanical properties shall be determined from separately cast test bar castings and shall meet the requirements shown in Table 3.

8. Casting Repair

8.1 Alloys included in this specification are generally weldable. All weld repairs shall be made utilizing welding procedures qualified in accordance with Section IX of the ASME Code, and repair welding shall be done by welders or welding operators in accordance with ASME Section IX. Weld repairs may be made at the manufacturer's discretion provided each excavation does not exceed 20% of the casting section or wall thickness or 4% of the casting surface area.

8.2 Excavations that exceed those described in 8.1 may be made at the manufacturer's discretion except that when required (4.1.11) the weld procedure shall be approved by the purchaser and the following records shall be maintained:

8.2.1 A sketch or drawing showing the dimensions, depth, and location of excavations,

8.2.2 Postweld heat treatment, when applicable,

8.2.3 Weld repair inspection results,

8.2.4 Casting identification number,

8.2.5 Weld procedure identification number,

8.2.6 Welder identification, and

8.2.7 Name of inspector.

8.3 The castings shall not be impregnated without approval of the purchaser.

9. Sampling

9.1 Test bar castings for the Copper Alloy UNS Nos. in this specification shall be cast to the form and dimensions shown in Fig. 1 or 2 in Practice B 208.

9.2 When material is specified to meet the requirements of the ASME Boiler and Pressure Vessel Code, for small remelts the lot size shall not exceed 1000 lb (455 kg) of castings and shall consist of all of the metal from a single master heat poured from an individual melting unit, or group of melting units, operating during the course of one-half shift, not to exceed 5 h.

10. Test Methods

10.1 Brinell readings shall be taken on the grip end of the tension test bar and shall be made in accordance with Test Method E 10, with the exception that a 3000-kg load shall be used.

10.2 Rockwell hardness readings shall be taken on the grip end of the tension test bar and shall be made in accordance with Test Methods E 18.

10.3 When specified in the purchase order, additional hardness testing may be performed on castings. The test location and hardness values shall be agreed upon between the manufacturer and the purchaser.

11. Certification

11.1 The manufacturer's certificate of compliance shall be furnished to the purchaser stating that samples representing each lot have been tested and inspected in accordance with this specification and the requirements have been met.

12. Keywords

12.1 aluminum-bronze castings; copper alloy castings; copper-base alloy castings

APPENDIX

(Nonmandatory Information)

X1. METRIC EQUIVALENTS

X1.1 The SI unit for strength properties now shown is in accordance with the International System of Units (SI). The derived SI unit for force is the newton (N), which is defined as that force that, when applied to a body having a mass of one kilogram, gives it an acceleration of one meter per second square ($N = kg \cdot m/s^2$). The derived SI unit for pressure or stress is the newton per square meter (N/m^2), which has been named the pascal (Pa) by the General Conference on Weights and Measures. Since 1 ksi = 6 894 757 Pa, the metric equivalents are expressed as megapascal (MPa), which is the same as MN/m^2 and N/mm^2.

SPECIFICATION FOR ALUMINUM BRONZE ROD, BAR, AND SHAPES

SB-150

(Identical with ASTM Specification B 150-95a for the alloys, tempers, and product forms covered except for the deletion of Supplementary Requirements for government procurement. Certification has been made mandatory.)

1. Scope

1.1 This specification covers aluminum bronze rod, bar, and shapes for Copper Alloys UNS Nos. C61400, C62300, C63000, and C64200.

NOTE 1 — Material for hot forging is described in Specification B 124.

NOTE 2 — A complete metric companion, Specification B 150M, has been developed; therefore, no metric equivalents are presented in this specification.

NOTE 3: **Warning** — Mercury is a definite health hazard in use and in disposal.

2. Referenced Documents

2.1 The following documents of the issue in effect on date of material purchase form a part of this specification to the extent referenced herein:

2.1.1 *ASTM Standards:*

B 124 Specification for Copper and Copper Alloy Forging Rod, Bar, and Shapes
B 154 Test Method for Mercurous Nitrate Test for Copper and Copper Alloys
B 601 Practice for Temper Designations for Copper and Copper Alloys — Wrought and Cast
E 53 Test Methods for Chemical Analysis of Copper
E 54 Test Methods for Chemical Analysis of Special Brasses and Bronzes
E 62 Test Methods for Chemical Analysis of Copper and Copper Alloys (Photometric Methods)
E 118 Test Methods for Chemical Analysis of Copper — Chromium Alloys
E 478 Test Methods for Chemical Analysis of Copper Alloys
E 527 Practice for Numbering Metals and Alloys (UNS)

2.1.2 *ASME Specification:*

SB-249 Specification for General Requirements for Wrought Copper and Copper-Alloy Rod, Bar and Shapes

3. Ordering Information

3.1 Material ordered to this specification should contain information listed in the "Ordering Information" Section of Specification SB-249, plus the following information:

3.1.1 State if the material is to be used in welding applications,

3.1.2 Quantity, total weight, footage, or number of pieces for each size,

3.1.3 Certification,

3.1.4 Mill test reports, when required, and

3.1.5 *Shapes* — The dimensional tolerances shall be as agreed upon between the manufacturer and the purchaser and shall be specified.

4. General Requirements

4.1 Material shall conform to the applicable requirements of the current edition of Specification SB-249 except where expressly stated herein.

5. Materials and Manufacture

5.1 Refer to Specification SB-249.

6. Chemical Composition

6.1 The material shall conform by alloy to the compositional requirements specified in Table 1.

TABLE 1
CHEMICAL REQUIREMENTS

Elements	Composition, %			
	Copper Alloy UNS No.			
	C61400	C62300	C63000	C64200
Aluminum	6.0–8.0	8.5–10.0	9.0–11.0	6.3–7.6
Copper, incl silver	remainder	remainder	remainder	remainder
Iron	1.5–3.5	2.0–4.0	2.0–4.0	0.30 max
Nickel, incl cobalt	...	1.0 max	4.0–5.5	0.25 max
Manganese	1.0 max	0.50 max	1.5 max	0.10 max
Silicon	...	0.25 max	0.25 max	1.5–2.2
Tin	...	0.6 max	0.20 max	0.20 max
Zinc, max	0.20	...	0.30	0.50
Lead, max	0.01	...	...	0.05
Arsenic, max	...	...	...	0.15
Phosphorus, max	0.015	...	...	...
Other named elements	...	...	...	...

6.1.1 Copper, when specified as the remainder and not determined directly, shall be taken as the difference between the sum of all elements with limiting values analyzed and 100%.

6.2 The sum of specified elements, when analyzed, shall be 99.5% minimum for all alloys except C61300, which shall be 99.8% minimum.

6.3 These specification limits do not preclude the presence of other elements. Limits for unnamed elements may be established by agreement between the manufacturer and the purchaser.

7. Temper

7.1 Tempers available under this specification, and as defined in Practice B 601, are HR50, M10, M20, M30, O20, O25, O30, TQ30, TQ50, and TQ55.

8. Mechanical Properties

8.1 *Tensile* — Each alloy shall conform to the appropriate tensile property requirement specified in Table 2.

9. Other Requirements

9.1 *Mercurous Nitrate Test* — Material furnished in any temper may, when specified, be required to pass the test in accordance with Test Method B 154.

9.2 *Piston Finish* — When specified, round rod over 0.500 in. in diameter shall be furnished piston finished. Refer to Specification SB-249.

10. Dimensions, Mass, and Permissible Variations

10.1 Refer to the appropriate paragraphs in Specification SB-249 with particular attention to the following tables of that specification:

10.1.1 *Diameter or Distance Between Parallel Surfaces:*

10.1.1.1 *Rod: Round, Hexagonal, Octagonal* — Refer to Table 2.

10.1.1.2 *Rod, M30* — Refer to Table 4.

10.1.1.3 *Round Rod, M20* — Refer to Table 6.

10.1.1.4 *Piston Finish Rod* — Refer to Table 3.

10.1.2 *Bar:*

10.1.2.1 *Rectangular and Square* — Refer to Tables 9 and 11.

10.1.2.2 *Bar, M30* — Refer to Table 4.

10.1.3 *Length of Rod, Bar, and Shapes* — Refer to Tables 13 and 15.

10.1.4 *Straightness:*

10.1.4.1 *Rod and Bar* — Refer to Table 18.

10.1.4.2 *Shafting Rod* — Refer to Table 17.

10.1.4.3 *Rod, Bar, and Shapes of M20 and M30 Temper* — They shall be of sufficient straightness to meet normal commercial requirements.

10.1.5 *Edge Contours* — Refer to section entitled, "Edge Contours."

10.2 *Shapes* — The dimensional tolerances for shapes shall be as agreed upon between the manufacturer and the purchaser.

TABLE 2
TENSILE REQUIREMENTS

Temper Designation		Diameter or Distance Between Parallel Surfaces, in.	Tensile Strength, Min., ksi[A]	Yield Strength, Min., ksi,[A] at 0.5% Extension Under Load	Elongation in 4 × Diameter or Thickness of Specimen Min., %[B]
Standard	Former				
		Copper Alloy UNS No. C61400			
HR50	Drawn and stress relieved	Rod (Round Only):			
		½ and under	80	40	30
		Over ½ to 1, incl	75	35	30
		Over 1 to 2, incl	70	32	30
		Over 2 to 3, incl	70	30	30
		Copper Alloy UNS No. C62300			
HR50	Drawn and stress relieved	Rod (Round Only):			
		½ and under	90	50	12
		Over ½ to 1, incl	88	44	15
		Over 1 to 2, incl	84	40	15
		Over 2 to 3, incl	76	37	20
M20	As hot rolled				
M30	As hot extruded				
020	Hot forged and annealed				
025	Hot rolled and annealed	Over 3	75	30	20
030	Hot extruded and annealed				
HR50	Drawn and stress relieved				
HR50	Drawn and stress relieved	Rod (Hexagonal and Octagonal) and Bar:			
		1 and under	80	35	15
		Over 1 to 2, incl	78	32	15
M20	As hot rolled	Over 2	75	30	20
M20	As hot rolled				
M30	As hot extruded				
020	Hot forged and annealed	Shapes, All Sizes	75	30	20
025	Hot rolled and annealed				
030	Hot extruded and annealed				
HR50	Drawn and stress relieved				
		Copper Alloy UNS No. C63000			
HR50	Drawn and stress relieved	1—Standard Strength Rod:			
		½ to 1, incl	100	50	5
		Over 1 to 2, incl	90	45	6
		Over 2 to 3, incl	85	42.5	10
M20	As hot rolled				
M30	As hot extruded				
020	Hot forged and annealed	over 3 to 4, incl	85	42.5	10
025	Hot rolled and annealed	over 4	80	40	12
030	Hot extruded and annealed				
HR50	Drawn and stress relieved				
HR50	Drawn and stress relieved	Bar:			
		½ to 1, incl	100	50	5
		over 1 to 2, incl	90	45	6

TABLE 2
TENSILE REQUIREMENTS (CONT'D)

Temper Designation		Diameter or Distance Between Parallel Surfaces, in.	Tensile Strength, Min., ksi[A]	Yield Strength, Min., ksi,[A] at 0.5% Extension Under Load	Elongation in 4 × Diameter or Thickness of Specimen Min., %[B]
Standard	Former				
		Copper Alloy UNS No. C63000			
M20	As hot rolled	over 2 to 4, incl	85	42.5	10
M30	As hot extruded	over 4	80	40	12
020	Hot forged and annealed				
025	Hot rolled and annealed				
030	Hot extruded and annealed				
HR50	Drawn and stress relieved				
M20	As hot rolled	Shapes, All Sizes	85	42.5	10
M30	As hot extruded				
020	Hot forged and annealed				
025	Hot rolled and annealed				
030	Hot extruded and annealed				
HR50	Drawn and stress relieved				
HR50	Drawn and stress relieved	2—High Strength Rod:			
		1 and under	110	68	10
		over 1 to 2, incl	110	60	10
		over 2 to 3, incl	105	55	10
TQ50	Quench hardened and temper annealed	over 3 to 5, incl	100	50	10
		Copper Alloy UNS No. C64200			
HR50	Drawn and stress relieved	Rod and Bar:			
		½ and under	90	45	9
		Over ½ to 1, incl	85	45	12
		Over 1 to 2, incl	80	42	12
		Over 2 to 3, incl	75	35	15
	As hot forged — air				
M10	cooled	Over 3 to 4, incl	70	30	15
M20	As hot rolled	Over 4	70	25	15
M30	As hot extruded	Shapes, All Sizes	70	30	15

[A] ksi = 1000 psi.
[B] In any case a minimum gage length of 1 in. shall be used.

11. Workmanship and Finish

11.1 Refer to Specification SB-249.

11.2 When specified in the contract or purchase order, round rod over ½ in. in diameter shall be furnished as piston finish rod or shafting rod.

12. Sampling

12.1 Refer to Specification SB-249.

13. Number of Tests and Retests

13.1 Refer to Specification SB-249.

14. Specimen Preparation

14.1 Refer to Specification SB-249 for the preparation of the appropriate test specimen.

15. Test Methods

15.1 Refer to Specification SB-249 for the appropriate test method.

15.2 Chemical Composition, in case of disagreement, shall be determined as follows:

Element	ASTM Test Methods
Aluminum	E 54
Arsenic	E 62
Copper	E 478
Iron	E 54
Lead	E 478, Atomic absorption
Manganese	E 62
Nickel	E 478, Photometric
Phosphorus	E 62
Silicon	E 54, Perchloric acid
Tin	E 478, Photometric
Zinc	E 478, Atomic absorption
Cadmium	E 53
Chromium	E 118

16. Significance of Numerical Limits

16.1 Refer to Specification SB-249.

17. Inspection

17.1 Refer to Specification SB-249.

18. Rejection and Rehearing

18.1 Refer to Specification SB-249.

19. Certification

19.1 Refer to Specification SB-249.

20. Mill Test Report

20.1 Refer to Specification SB-249.

21. Packing, Marking, Shipping, and Preservation

21.1 Refer to Specification SB-249.

22. Supplementary Requirements

22.1 Refer to Specification SB-249.

23. Keywords

23.1 aluminum bronze bar; aluminum bronze rod; aluminum bronze shapes

SPECIFICATION FOR COPPER-NICKEL-ZINC ALLOY (NICKEL SILVER) AND COPPER-NICKEL ROD AND BAR

SB-151

(Identical with ASTM Specification B 151-94)

1. Scope

1.1 This specification establishes the requirements for copper-nickel-zinc and copper-nickel rod and bar for general application produced from Copper Alloy UNS Nos. C70600, C71500, C74500, C75200, C75700, C76400, C77000, and C79200.

1.2 This specification is the companion to SI Specification B 151M; therefore, no SI equivalents are presented in this specification.

NOTE 1 — Requirements for copper-nickel-zinc alloy wire appear in Specification B 206.

2. Referenced Documents

2.1 *ASTM Standards:*

B 151M Specification for Copper-Nickel-Zinc (Nickel Silver) and Copper-Nickel Rod and Bar (SI)

B 206 Specification for Copper-Nickel-Zinc (Nickel Silver) and Copper-Nickel Alloy Wire

B 249 Specification for General Requirements for Wrought Copper and Copper-Alloy Rod, Bar and Shapes

B 601 Practice for Temper Designations for Copper and Copper Alloys — Wrought and Cast

E 3 Methods of Preparation of Metallographic Specimens

E 8 Test Methods for Tension Testing of Metallic Materials

E 75 Test Methods for Chemical Analysis of Copper-Nickel and Copper-Nickel-Zinc Alloys

E 76 Test Methods for Chemical Analysis of Nickel-Copper Alloys

E 112 Test Methods for Determining Average Grain Size

E 255 Practice for Sampling Copper and Copper Alloys for Determination of Chemical Composition

E 478 Test Methods for Chemical Analysis of Copper Alloys

3. Ordering Information

3.1 The contract or purchase order for product under this specification shall include the following information:

3.1.1 ASTM designation and year of issue (for example, B 151-XX),

3.1.2 Copper Alloy UNS No. designation (Section 4 and Table 1),

3.1.3 Temper (Section 7 and Tables 2, 3, and 4),

3.1.4 Form: cross section, such as round, hexagonal, square, etc. (Section 11),

3.1.5 Diameter or distance between parallel surfaces (Section 11),

3.1.6 Weight: total for each form, size, and temper,

3.1.7 When product is purchased for subsequent welding application (Table 1, Footnote C),

3.1.8 When material is purchased for agencies of the U.S. Government (Section 10).

3.2 The following options are available and should be specified in the contract or purchase order when required:

3.2.1 Heat identification or traceability detail,

3.2.2 Certification, and

3.2.3 Test report.

4. General Requirements

4.1 The following sections of Specification B 249 are part of this specification:

TABLE 1
CHEMICAL REQUIREMENTS

Copper Alloy UNS No.	Composition % max (unless shown as range or min)						
	Copper, incl. Silver	Nickel, incl. Cobalt	Lead	Iron	Manganese, Max.	Zinc	Other Named Elements
C70600[A]	86.5 min[B]	9.0–11.0	0.05[C]	1.0–1.8	1.0	1.0[C] max	[C]
C71500	65.0 min[B]	29.0–33.0	0.05[C]	0.40–1.0	1.0	1.0[C] max	[C]
C74500	63.5–66.5	9.0–11.0	0.05	0.25	0.50	remainder	...
C75200	63.0–66.5	16.5–19.5	0.05	0.25	0.50	remainder	...
C75700	63.5–66.5	11.0–13.0	0.05	0.25	0.50	remainder	...
C76400	58.5–61.5	16.5–19.5	0.05	0.25	0.50	remainder	...
C77000	53.5–56.5	16.5–19.5	0.05	0.25	0.50	remainder	...
C79200	59.0–66.5	11.0–13.0	0.8–1.4	0.25	0.50	remainder	...

[A] Phosphorus and sulfur content shall each be 0.02% max.
[B] Copper plus elements with specific limits, 99.5% min.
[C] When the product is for subsequent welding applications and so specified by the purchaser, zinc shall be 0.50% max, lead 0.02% max, phosphorus 0.02% max, sulfur 0.02% max, and carbon 0.05% max.

TABLE 2
GRAIN SIZE REQUIREMENTS FOR OS (ANNEALED) TEMPER ROD AND BAR

Copper Alloy UNS No.	Temper Designation	Grain Size, mm		
		Nominal	Minimum	Maximum
All alloys	OS015	0.015	...	0.030
All alloys	OS035	0.035	0.025	0.050
C74500, C75200, C75700, C76400, and C77000	OS070	0.070	0.050	0.100

4.1.1 Terminology,

4.1.2 Material and Manufacture,

4.1.3 Workmanship, Finish and Appearance,

4.1.4 Sampling,

4.1.5 Specimen Preparation

4.1.6 Test Methods,

4.1.7 Inspection,

4.1.8 Certification,

4.1.9 Test Report,

4.1.10 Packaging and Package Marking.

4.2 An identical section in this specification supplements the referenced section.

5. Material and Manufacture

5.1 *Material:*

5.1.1 As specified in the contract or purchase order, the product furnished shall be produced from Copper Alloy UNS No. C70600, C71500, C74500, C75200, C75700, C76400, C77000, or C79200.

6. Chemical Composition

6.1 The product material composition shall conform to the requirements prescribed in Table 1 for the Copper Alloy UNS No. designation specified in the contract or purchase order.

6.1.1 These specification limits do not preclude the presence of other elements. Limits may be established and analysis required for unnamed elements by agreement between the manufacturer and the purchaser.

6.2 For copper alloys in which zinc is specified as the remainder, zinc may be taken as the difference between the sum of results for all elements determined and 100%.

6.3 When all elements listed in Table 1 for a specified alloy are determined, the sum of results shall be 99.5% minimum.

7. Temper

7.1 Tempers available under this specification and as defined in Practice B 601 are: O60, OS035, OS070, H01, and H04.

NOTE 3 — The purchaser should confer with the manufacturer or supplier concerning the availability of a specific form and temper.

8. Grain Size Requirements

8.1 *Grain Size:*

8.1.1 Product in the OS temper shall conform to the requirement prescribed in Table 2 for the specified copper alloy and temper.

TABLE 3
TENSILE REQUIREMENTS FOR COPPER-NICKEL-ZINC ALLOY ROD AND BAR

Temper Designation	Diameter or Distance Between Parallel Surfaces, in.	Tensile Strength, ksi[A]			
		Copper Alloy UNS Nos. C75200 and C79200		Copper Alloy UNS Nos. C74500, C75700, C76400, and C77000	
		Min	Max	Min	Max
	Rod: round				
H01	0.02 to 0.50, incl	60	80	75	95
	Rod: round, hexagonal, octagonal				
H04	0.02 to 025, incl	80	100	90	110
	Over 0.25 to 0.50, incl	70	90	80	100
	Over 0.50 to 1.0, incl	65	85	75	95
	Over 1.0	60	80	70	90
	Bar: square, rectangular				
	all sizes	68	88	75	95

[A] 1 ksi = 1000 psi.

8.1.2 Grain size shall be the basis for acceptance or rejection for OS temper product produced from Copper Alloy UNS Nos. C74500, C75200, C75700, C76400, C77000, and C79200.

9. Mechanical Properties Requirements

9.1 *Tensile Requirement:*

9.1.1 Copper-Nickel-Zinc Alloys UNS Nos. C74500, C75200, C75700, C76400, C77000, and C79200, in tempers H01 and H04 shall conform to the requirement prescribed in Table 3 for the specified shape and size and the tensile strength shall be the basis of acceptance or rejection for product in these tempers.

9.1.2 Copper-Nickel Alloys UNS Nos. C70600 and C71500 in tempers H01, H04, and O60 shall conform to the requirement prescribed in Table 4 for the specified shape and size and tensile properties shall be the basis of acceptance or rejection for all tempers.

10. Purchases for U.S. Government

10.1 When specified in the contract or purchase order, product purchased for agencies of the U.S. Government shall conform to the special government regulations specified in the Supplemental Requirements section.

11. Dimensions, Mass, and Permissible Variations

11.1 The following titled sections and tables in Specification E 249 are a part of this specification.

11.1.1 *Diameter or Distance Between Parallel Surfaces:*

11.1.1.1 Rod: Round, Hexagonal, Octagonal — Table 2.

11.1.1.2 Bar: Rectangular and Square — Tables 9 and 11.

11.1.2 Length — Tables 12 and 14.

11.1.3 Straightness — Table 15.

11.1.4 Edge Contours.

12. Number of Tests and Retests

12.1 *Tests:*

12.1.1 *Chemical Analysis:*

12.1.1.1 Chemical composition shall be determined as the per element mean of results from at least two replicate determinations of the sample(s) and the results of each replication shall conform to compositional requirements.

12.1.2 *Other Tests:*

12.1.2.1 Grain size and tensile properties shall be determined from specimens prepared from each of

TABLE 4
TENSILE REQUIREMENTS FOR COPPER-NICKEL ALLOY ROD AND BAR

Temper Designation	Diameter or Distance Between Parallel Surfaces, in.		Tensile Strength min, ksi[A]	Yield Strength at 0.5% Extension Under Load, min, ksi[A]	Elongation in 4× Diameter or Thickness of Specimen, min, %[A]
		Copper Alloy UNS No. C70600			
O60	round, hexagonal, and octagonal rods and square bars	all sizes	38	15	30
H04	round, hexagonal, and octagonal rods and square bars	up to 3/8, incl	60	38	10
		over 3/8 to 1, incl	50	30	15
		over 1 to 3	40	15	30
O60	rectangular bars and shapes	all sizes	38	15	30
		For Thicknesses			
H04	rectangular bars	up to 3/8, incl	55	30	10
		over 3/8 to 1/2, incl	50	28	12
		over 1/2 to 3	40	17	20
H04	shapes	all sizes	(As agreed between manufacturer or supplier and puchaser)		
		Copper Alloy UNS No. C71500			
O60	round, hexagonal, and octagonal rods and square bars	up to 1/2, incl	52	18	30
		over 1/2 to 1, incl	48	18	30
		over 1	45	18	30
H01	round, hexagonal, and octagonal rods and square bars	up to 1/2, incl	65	50	10
		over 1/2 to 1, incl	60	45	15
		over 1 to 3, incl	55	35	20
H04		up to 1/2, incl	80	60	8
		over 1/2 to 1, incl	75	58	10
		over 1 to 2, incl	70	55	10
O60	rectangular bars and shapes	all sizes	45	15	30
		For Thicknesses			
H04	rectangular bars	up to 1/2, incl	75	55	7
		over 1/2 to 1, incl	70	50	10
H04	shapes	all sizes	(As agreed between manufacturer or supplier and puchaser)		

[A] ksi = 1000 psi.
[B] In any case, a minimum gage length of 1 in. shall be used.

two sample pieces selected for tests and each specimen shall conform to test requirement(s).

12.2 *Retests:*

12.2.1 When requested by the manufacturer or supplier, a retest may be permitted when test results obtained by the purchaser fail to conform with the product specification requirements(s).

12.2.2 Retesting shall be as directed in the product specification for the initial test except for the number of test specimens which shall be twice that normally required for the test. Test results for all specimens shall conform to the product specification requirement(s) in retest and failure to comply shall be cause for lot rejection.

13. Test Methods

13.1 The test method(s) used for quality control or production control, or both, for the determination of conformance with product property requirements are discretionary.

13.1.1 The test method(s) used to obtain data for the preparation of certification or test report, or both, shall be made available to the purchaser on request.

13.2 *Chemical Analysis:*

13.2.1 Chemical composition shall be determined, in case of disagreement, as follows:

Element	Range, %	Method
Copper	53–90	E 478
Iron	0.02–8	E 75
Lead	0.05–1.5	E 478 (AA)
Manganese	0.05–1.0	E 75
Nickel	8–34	E 478 (Gravimetric)
Zinc	0–1.0	E 478 (AA)
Zinc	2–40	E 478 (Titrimetric)

14. Rejection and Rehearing

14.1 *Rejection:*

14.1.1 Product that fails to conform to the requirements of the product specification may be rejected.

14.1.2 Rejection shall be reported to the manufacturer or supplier, promptly and in writing.

14.1.3 In case of disagreement or dissatisfaction with the results of the test upon which rejection was based, the manufacturer or supplier may take claim for a rehearing.

14.2 *Rehearing:*

14.2.1 As a result of product rejection, the manufacturer or supplier may make claim to the purchaser for retest to be conducted by the manufacturer or supplier and the purchaser. Samples of the rejected product shall be taken in accordance with the product specification and tested by both parties as directed in the product specification, or, alternatively, upon agreement by both parties, an independent laboratory may be selected for the tests using the test methods prescribed in the product specification.

15. Keywords

15.1 copper alloy bar; copper alloy rod; copper-nickel alloy bar; copper-nickel alloy rod; copper-nickel-zinc alloy bar; copper-nickel-zinc alloy rod; cupronickel bar; cupronickel rod; nickel silver bar; nickel silver rod; UNS C70600 bar; UNS C71500 bar; UNS 74500 bar; UNS 75200 bar, UNS C75700 bar; UNS C76400 bar; UNS C77000 bar; UNS C79200 bar; UNS C70600 rod; UNS C71500 rod; UNS C74500 rod; UNS C75200 rod, UNS C75700 rod; UNS C76400 rod; UNS C77000 rod; UNS C79200 rod

SPECIFICATION FOR COPPER SHEET, STRIP, PLATE, AND ROLLED BAR

SB-152

(Identical with ASTM Specification B 152-97 for the alloys and tempers covered except for the deletion of Supplementary Requirements, and editorial differences. Certification and Product Identification have been made mandatory.)

1. Scope

1.1 This specification establishes the requirements for copper sheet, strip, plate, and rolled bar. Each of the coppers listed below has a unique property, making it suitable for specific applications. The purchaser in consultation with the supplier shall choose and specify the copper best suited to his application. In the case where the copper is for general, rather than specific application, and the purchaser does not specify which copper is wanted, one of the coppers listed that is readily available shall be supplied.

Copper UNS No.	Previous Designation	Type of Copper
C10200[A]	OF	Oxygen-free without residual deoxidants
C10400	OFS	Oxygen-free, silver bearing
C10500		
C10700		
C11000[A]	ETP	Electrolytic tough pitch
C12200[A]	DHP	Phosphorized, high residual phosphorus
C12300	DPS	Phosphorized, silver bearing
C14200	DPA	Phosphorus, deoxidized, arsenical

[A] SAE Specification CA 102 conforms to the requirements for Copper UNS No. C10200; SAE Specification CA 110 conforms to the requirements for Copper UNS No. C11000; and SAE Specification CA 122 conforms to the requirements for Copper UNS No. C12200.

NOTE 1 — Copper UNS Nos. C10400, C10500, and C10700 identify coppers with specific silver content (see Table 1).

NOTE 2 — This specification is not intended to cover material rolled to ounce-weight thicknesses. Such material is covered by Specification B 370.

Plates for locomotive fireboxes are covered by Specification B 11.

Flat copper products with finished (rolled or drawn) edges (flat wire and strip) are also covered by Specification B 272.

NOTE 3 — A complete metric companion to Specification B 152 has been developed — B 152M; therefore, no metric equivalents are presented in this specification.

2. Referenced Documents

2.1 *ASTM Standards:*

2.1.1 The following documents of the issue in effect on date of material purchase form a part of this specification to the extent referenced herein:

B 11 Specification for Copper Plates for Locomotive Fireboxes

B 193 Test Method for Resistivity of Electrical Conductor Materials

B 224 Classification of Coppers

B 272 Specification for Flat Copper Products With Finished (Rolled on Drawn) Edges (Flat Wire and Strip)

B 370 Specification for Copper Sheet and Strip for Building Construction

B 577 Test Methods for Hydrogen Embrittlement of Copper

B 601 Practice for Temper Designations for Copper and Copper Alloys — Wrought and Cast

E 8 Test Methods for Tension Testing of Metallic Materials

E 527 Practice for Numbering Metals and Alloys (UNS)

2.2 *ASME Standard:*

SB-248 Specification for General Requirements for Wrought Copper and Copper Alloy Plate, Sheet, Strip, and Rolled Bar

TABLE 1
CHEMICAL REQUIREMENTS

Element	Composition, %							
	Copper UNS No.							
	C10200[A]	C10400[B]	C10500[B]	C10700[B]	C11000	C12200	C12300[C]	C14200
Copper (incl silver), min	99.95	99.95	99.95	99.95	99.90	99.9	99.90	99.4
Phosphorus	...	...	...	...	...	0.015–0.040	0.015–0.040	0.015–0.040
Arsenic	...	...	...	...	...	...	...	0.15–0.50
Silver, min	...	8[D]	10[D]	25[D]	...	...	4[D]	...

[A] Oxygen in C10200 shall be 10 ppm max.
[B] Copper UNS Nos. C10400, C10500, and C10700 are produced from oxygen-free Copper UNS No. C10200 with the addition of a specified amount of silver.
[C] Copper UNS No. C12300 is produced by the addition of silver to phosphorus-deoxidized copper.
[D] Values are in troy ounces per avoirdupois ton (1 oz/ton is equivalent to 0.0034%).

TABLE 2
TENSILE STRENGTH REQUIREMENTS AND APPROXIMATE HARDNESS VALUES FOR THE TEMPERS GIVEN (SEE 8.3)

Temper Designation		Tensile Strength, ksi[A]		Approximate Rockwell Hardness[B]	
Standard	Former	Min	Max	F Scale	Superficial 30T
H00	Cold Rolled Tempers:				
	Eighth hard	32	40	54–82	up to 49
H01	Quarter hard	34	42	60–84	18–51
H02	Half hard	37	46	77–89	43–57
H03	Three-quarter-hard	41	50	82–91	47–59
H04	Hard	43	52	86–93	54–62
H06	Extra hard	47	56	88–95	56–64
H08	Spring	50	58	91–97	60–66
H10	Extra spring	52	...	92 and over	61 and over
	Hot Rolled Tempers:				
M20[D]	Hot-rolled	30[C]	38	up to 75	up to 41
025[E]	Hot-rolled and annealed	30[C]	38	up to 65	up to 31

[A] ksi = 1000 psi.
[B] Rockwell values apply as follows: The F scale applies to metal 0.020 in. and over in thickness. The Superficial 30-T scale applies to metal 0.012 in. and over in thickness.
[C] The minimum yield strength at 0.5% extension under load or at 0.2% offset shall be 10 ksi.
[D] See Section 7.2.1.1.
[E] See Section 7.3.1.1.

3. Terminology

3.1 *Description of Term Specific to This Standard:*

3.1.1 *capable of*— the test need not be performed by the producer of the material. However, should subsequent testing by the purchaser establish that the material does not meet these requirements the material shall be subject to rejection.

4. Ordering Information

4.1 Orders for material under this specification should include the following information:

4.1.1 Quantity,

4.1.2 Copper UNS No. (Section 1). When Alloys C10400, C10500, C10700, or C12300, the amount of silver in ounces per ton,

4.1.3 Temper (Section 7),

4.1.4 Dimensions: thickness, width, and weight (Section 14),

4.1.5 How furnished (straight lengths or coils),

4.1.6 Length (Section 14),

4.1.7 Weight of coils: coil weights or coil size limitations, if required,

4.1.8 Type of edge, if required; slit, sheared, sawed, square edges, rounded corners, rounded edges, or full-rounded edges (see 14.1.6),

4.1.9 Whether the resistivity test is required for either Copper UNS Nos. C10200 or C11000 (Section 13),

4.1.10 Embrittlement test (Section 12), and

4.1.11 ASTM specification number.

4.2 The following requirements shall be specified if applicable:

4.2.1 Mill test report, if required (Section 16),

4.2.2 Resistivity test for copper UNS Nos. C10200 or C11000 (Section 13),

4.2.3 Embrittlement test for C10200 or C11000 (Section 12), and

4.2.4 Type of edge, if other than slit.

4.3 Certification and product identification are required (Section 15).

5. General Requirements

5.1 Material furnished under the specification shall conform to the applicable requirements of the current edition of Specification SB-248.

6. Chemical Composition

6.1 The material shall conform to the chemical requirements of Table 1.

6.2 If limits for unnamed elements are required, they shall be established and analysis required by agreement between manufacturer or supplier and purchaser.

7. Tempers

7.1 *Rolled Material (H)* — The standard tempers of cold-rolled sheet, strip, plate, and rolled bar copper of all types are designated as follows (see Practice B 601):

Temper Designation	
Standard	Former
H00	Eight-hard,
H01	Quarter-hard,
H02	Half-hard,[A]
H03	Three-quarter-hard,[A]
H04	Hard,[A]
H06	Extra-hard,[A]
H08	Spring,[A] and
H10	Extra Spring,[A]

[A] Consult suppliers to determine the availability of sheet, plates, and rolled bar in these tempers.

TABLE 3
GRAIN SIZE REQUIREMENTS AND APPROXIMATE ROCKWELL HARDNESS VALUES FOR COLD-ROLLED ANNEALED TEMPERS

Temper Designation		Grain Size, mm		Approximate Rockwell Hardness[B]
Standard	Former	Min.	Max.	F Scale
060	Soft anneal	[A]	...	up to 65
0S025	Deep-drawing anneal	[A]	0.050	30–75

[A] Although no minimum grain size is required, this material must be fully recrystallized.

[B] Rockwell hardness values apply as follows: The F scale applies to metal 0.020 in. and over in thickness.

7.1.1 Special or nonstandard tempers are subject to negotiation between manufacturer and purchaser (see 4.1.3).

7.2 *As Hot-Rolled Temper (M20):*

7.2.1 The temper of hot-rolled copper sheet and plate shall be that produced by hot rolling.

7.2.1.1 Plate not specified for Boiler and Pressure Vessel Code Applications are generally available in the M20 temper.

7.3 *Annealed Temper (O)*

7.3.1 The temper of hot-rolled and annealed copper sheet and plate shall be that produced by hot-rolling and subsequent annealing (O25).

7.3.1.1 Plates specified for Boiler and Pressure Vessel Code applications shall be furnished in the O25 temper.

7.3.2 The standard tempers of cold-rolled annealed copper sheet, strip, and plate are designated as follows: O60, soft anneal and O68, deep drawing anneal.

NOTE 4 — Soft-anneal temper is suitable for most industrial users of copper such as forming, spinning, and simple drawing operations where close control of temper is not essential. Deep-drawing anneal temper is especially suited for very severe drawing and forming operations where maximum ductility and close control of temper is required.

8. Mechanical Requirements of Hot-Rolled Tempers

8.1 The tension test shall be the standard test for all tempers of cold-rolled, hot-rolled, and hot-rolled and annealed copper sheet, strip, plate, and rolled bar, and acceptance or rejection shall depend only on the tensile properties, which shall conform to the requirements prescribed in 8.3 and Table 2.

8.2 Test specimens shall be taken to conform, where applicable, to Section 6, of Test Methods E 8. Tension test specimens shall be taken so that the longitudinal axis of such specimens is parallel to the direction of rolling. Plate item test — five specimens shall be taken either from the excess portion of the plate or from separate pieces produced under the same specification and temper.

8.3 Hot-rolled and hot-rolled and annealed plates of Copper UNS Nos. C11000 and C12200 shall have 40% minimum elongation in 2 in., and hot-rolled and hot-rolled and annealed plates of Copper UNS No. C14200 shall have 45% minimum elongation in 2 in.

9. Grain Size Requirements of Cold-Rolled Annealed Tempers

9.1 Grain size shall be the standard test for cold-rolled annealed copper sheet and strip, and acceptance or rejection shall depend only on the grain size. The average grain size of each of two samples of annealed material, as determined on a plane parallel to the surface of the sheet or strip, shall be within the limits prescribed in Table 3.

10. Rockwell Hardness

10.1 Rockwell hardness tests offer a quick and convenient method of checking copper of any temper for general conformity to the requirements for tensile strength or grain size. The approximate Rockwell hardness values for each temper are given in Table 2 or Table 3 for general information and assistance in testing.

11. Microscopical Examination

11.1 Samples of Copper UNS Nos. C10200, C10400, C10500, and C10700 shall be free of cuprous oxide as determined by Procedure A of Test Methods B 577. In case of a dispute, a referee method in accordance with Procedure C shall be employed.

11.2 When Copper UNS Nos. C12200 or C12300 are supplied, microscopical examination for cuprous oxide is not required.

12. Embrittlement Test

12.1 Samples of Copper UNS Nos. C10200, C10400, C10500, C10700, C12200, and C12300 shall be capable of passing the embrittlement test of Procedure B of Test Methods B 577. The actual performance of this test is not mandatory under the terms of this specification unless definitely specified in the ordering information. In case of a dispute, a referee method in accordance with Procedure C shall be employed.

13. Electrical Resistivity

13.1 When specified in the order, the electrical resistivity determined on samples of Copper UNS Nos. C10200 and C11000 shall not exceed the following limits when tested at a temperature of 20°C:

Condition	Electrical Resistivity, max, $\Omega \cdot g/m^2$
Soft (annealed) — C10200, C11000	0.15328
Cold rolled tempers — C10200, C11000	0.15775

NOTE 5 — The International Annealed Copper Standard electrical conductivity equivalents are as follows:

Electrical Resistivity, max, $\Omega \cdot g/m^2$	Conductivity, %
0.15328	100.00
0.15775	97.16

13.2 The electrical resistivity of the material shall be determined in accordance with Test Method B 193.

14. Dimensions, Mass, and Permissible Variations

14.1 The dimensions and tolerances for material covered by this specification shall be as prescribed in the current edition of Specification SB-248 with particular reference to Section 5 and the following tables of that specification:

14.1.1 *Thickness* — See 5.2, Table 1.

14.1.2 *Width:*

14.1.2.1 *Slit Metal and Slit Metal With Rolled Edges* — See 5.3, Table 4.

14.1.2.2 *Square-Sheared Metal* — See 5.3, Table 5.

14.1.2.3 *Sawed Metal* — See 5.3, Table 6.

14.1.3 *Length:*

14.1.3.1 *Specific and Stock Lengths With and Without Ends* — See 5.4, Table 7.

14.1.3.2 *Schedule of Lengths (Specific and Stock) With Ends* — See 5.4, Table 8.

14.1.3.3 *Length Tolerances for Square-Sheared Metal* — See 5.4, Table 9.

14.1.3.4 *Length Tolerances for Sawed Metal* — See 5.4, Table 10.

14.1.4 *Straightness:*

14.1.4.1 *Slit Metal and Slit Metal Either Straightened or Edge-Rolled* — See Section 5.5, Table 11.

14.1.4.2 *Square-Sheared Metal* — See 5.5, Table 12.

14.1.4.3 *Sawed Metal* — See 5.5, Table 13.

14.1.5 *Weight: Hot-Rolled Sheet and Plate* — See 5.7, Table 18.

14.1.6 *Edges* — See 5.6:

14.1.6.1 *Square Edges* — See 5.6.1, Table 14.

14.1.6.2 *Rounded Corners* — See 5.6.2, Table 15.

14.1.6.3 *Rounded Edges* — See 5.6.3, Table 16.

14.1.6.4 *Full-Rounded Edges* — See 5.6.4, Table 17.

15. Certification

15.1 The manufacturer shall furnish to the purchaser a certificate stating that each lot has been sampled, tested, and inspected in accordance with this specification and has met the requirements.

16. Mill Test Report

16.1 When specified on the purchase order, the manufacturer shall furnish to the purchaser a test report showing results of tests required by the specification.

17. Keywords

17.1 copper bars; rolled; copper plate; copper sheet; copper strip

SPECIFICATION FOR NICKEL ROD AND BAR

SB-160

(Identical with ASTM Specification B 160-99 except that certification has been made mandatory.)

1. Scope

1.1 This specification covers nickel (UNS N02200) and low carbon nickel (UNS N02201) in the form of hot-worked and cold-worked rod and bar in the conditions shown in Table 1.

1.2 The values stated in inch-pound units are to be regarded as the standard. The values given in parentheses are for information only.

2. Referenced Documents

2.1 *ASTM Standards:*

B 162 Specification for Nickel Plate, Sheet, and Strip
B 880 General Requirements for Chemical Check Analysis of Nickel, Nickel Alloys, and Cobalt Alloys
E 8 Test Methods of Tension Testing of Metallic Materials
E 18 Test Methods for Rockwell Hardness and Rockwell Superficial Hardness of Metallic Materials
E 29 Practice for Using Significant Digits in Test Data to Determine Conformance with Specifications
E 39 Test Methods for Chemical Analysis of Nickel
E 140 Hardness Conversion Tables for Metals

3. Terminology

3.1 *Descriptions of Terms Specific to This Standard:*

3.1.1 *bar* — material of rectangular (flats), hexagonal, or square solid section up to and including 10 in. (254 mm) in width and $\frac{1}{8}$ in. (3.2 mm) and over in thickness in straight lengths.

NOTE 1 — Hot-worked rectangular bar in widths 10 in. (254 mm) and under may be furnished as hot-rolled plate with sheared or cut edges in accordance with Specification B 162, provided the mechanical property requirements of Specification B 160 are met.

3.1.2 *rod* — material of round solid section furnished in straight lengths.

4. Ordering Information

4.1 It is the responsibility of the purchaser to specify all requirements that are necessary for the safe and satisfactory performance of material ordered under this specification. Examples of such requirements include, but are not limited to, the following:

4.1.1 ASTM designation and year of issue.

4.1.2 UNS number.

4.1.3 *Section* — Rod (round) or bar (square, hexagonal, or rectangular).

4.1.4 *Dimensions* — Dimensions including length.

4.1.5 Condition.

4.1.6 Finish.

4.1.7 *Quantity* — feet or number of pieces.

4.1.8 *Certification* — Certification and a report of test results are required (Section 15).

4.1.9 *Samples for Product (Check) Analysis* — State whether samples for product (check) analysis should be furnished.

4.1.10 *Purchaser Inspection* — If purchaser wishes to witness tests or inspection of material at place of manufacture, the purchase order must so state indicating which test or inspections are to be witnessed.

5. Chemical Composition

5.1 The material shall conform to the composition limits specified in Table 2.

5.2 If a product (check) analysis is performed by the purchaser, the material shall be done per ASTM B 880, and the material shall conform to the product (check) analysis variations defined in Table 1 of ASTM B 880.

6. Mechanical and Other Requirements

6.1 *Mechanical Properties* — The material shall conform to the mechanical properties specified in Table 1.

TABLE 1
MECHANICAL PROPERTIES

Condition and Diameter or Distance Between Parallel Surfaces, in. (mm)	Tensile Strength, min, psi (MPa)	Yield Strength (0.2% offset), min. psi (MPa)[A]	Elongation in 2 in. or 50 mm or 4D, min %
Nickel (UNS N02200)			
Cold-worked (as worked):			
Rounds, 1 (25.4) and under	80 000 (550)	60 000 (415)	10[B]
Rounds over 1 to 4 (25.4 to 101.6) incl.	75 000 (515)	50 000 (345)	15
Squares, hexagons, and rectangles, all sizes	65 000 (450)	40 000 (275)	25[B]
Hot-worked:			
All sections, all sizes	60 000 (415)	15 000 (105)	35[C]
Rings and disks[D]	–	–	–
Annealed:			
Rods and bars, all sizes	55 000 (380)	15 000 (105)	40[B]
Rings and disks[E]	–	–	–
Forging quality:			
All sizes	F	F	F
Low-Carbon Nickel (UNS N02201)			
Hot-worked:			
All sections, all sizes	50 000 (345)	10 000 (70)	40[C]
Annealed:			
All products, all sizes	50 000 (345)	10 000 (70)	40[B]

[A] See 12.2.
[B] Not applicable to diameters or cross sections under $^3/_{32}$ in. (2.4 mm).
[C] For hot-worked flats $^5/_{16}$ in. (7.9 mm) and under in thickness the elongation shall be 25%, min.
[D] Hardness B 45 to B 80, or equivalent.
[E] Hardness B 45 to B 70 or equivalent.
[F] Forging quality is furnished to chemical requirements and surface inspection only. No tensile properties are required.

TABLE 2
CHEMICAL REQUIREMENTS

Element	Composition Limits, % Nickel (UNS N02200)	Low-Carbon Nickel (UNS N02201)
Nickel, min[A]	99.0	99.0
Copper, max	0.25	0.25
Iron, max.	0.40	0.40
Manganese, max.	0.35	0.35
Carbon, max.	0.15	...
Carbon, max.	...	0.02
Silicon, max.	0.35	0.35
Sulfur, max.	0.01	0.01

[A] Element shall be determined arithmetically by difference.

7. Dimensions and Permissible Variations

7.1 *Diameter, Thickness, or Width* — The permissible variations from the specified dimensions as measured on the diameter or between parallel surfaces of cold-worked rod and bar shall be as prescribed in Table 3, and of hot-worked rod and bar as prescribed in Table 4.

7.2 *Out-of-Round* — Hot-worked rods and cold-worked rods (except "forging quality"), all sizes, in straight lengths, shall not be out-of-round by more than one half the total permissible variations in diameter shown in Tables 3 and 4, except for hot-worked rods $^1/_2$ in. (12.7 mm) in diameter and under, which may be out-of-round by the total permissible variations in diameter shown in Table 4.

7.3 *Corners* — Cold-worked bars will have practically exact angles and sharp corners.

7.4 *Machining Allowances for Hot-Worked Materials* — When the surfaces of hot-worked products are to be machined, the allowances prescribed in Table 5 are recommended for normal machining operations.

7.5 *Length* — The permissible variations in length of cold-worked and hot-worked rod and bar shall be as prescribed in Table 6.

7.5.1 Rods and bars ordered to random or nominal lengths will be furnished with either cropped or saw-cut

TABLE 3
PERMISSIBLE VARIATIONS IN DIAMETER OR DISTANCE BETWEEN PARALLEL SURFACES OF COLD-WORKED ROD AND BAR

Specified Dimension, in. (mm)[A]	Permissible Variations from Specified Dimensions, in. (mm) +	−
Rounds:		
1/16 (1.6) to 3/16 (4.8), excl	0	0.002 (0.05)
3/16 (4.8) to 1/2 (12.7), incl	0	0.003 (0.08)
1/2 (12.7) to 15/16 (23.8), incl	0.001 (0.03)	0.002 (0.05)
Over 15/16 (23.8) to 1 15/16 (49.2), incl	0.0015 (0.04)	0.003 (0.08)
Over 1 15/16 (49.2) to 2 1/2 (63.5), incl	0.002 (0.05)	0.004 (0.10)
Over 2 1/2 (63.5) to 3 (76.2), incl	0.0025 (0.06)	0.005 (0.13)
Over 3 (76.2) to 3 (88.9), incl	0.003 (0.08)	0.006 (0.15)
Over 3 1/2 (88.9) to 4 (101.6), incl	0.0035 (0.09)	0.007 (0.18)
Hexagons, squares, rectangles:		
1/2 (12.7) and less	0	0.004 (0.10)
Over 1/2 (12.7) to 7/8 (22.2), incl	0	0.005 (0.13)
Over 7/8 (22.2) to 1 1/4 (31.8), incl	0	0.007 (0.18)
Over 1 1/4 (31.8) to 2 1/4 (57.2), incl	0	0.009 (0.23)
Over 2 1/4 (57.2) to 3 (76.2), incl	0	0.011 (0.28)
Over 3 (76.2) to 3 1/2 (88.9), incl	0	0.015 (0.38)
Over 3 1/2 (88.9) to 4 (101.6), incl	0	0.017 (0.43)

[A] Dimensions apply to diameter of rounds, to distance between parallel surfaces of hexagons and squares, and separately to width and thickness of rectangles.

TABLE 4
PERMISSIBLE VARIATIONS IN DIAMETER OR DISTANCE BETWEEN PARALLEL SURFACES OF HOT-WORKED ROD AND BAR

Specified Dimension, in. (mm)[A]	Permissible Variations from Specified Dimensions, in. (mm) +	−
Rod and bar, hot-worked:		
1 (25.4) and under	0.016 (0.41)	0.016 (0.41)
Over 1 (25.4) to 2 (50.8), incl	0.031 (0.79)	0.016 (0.41)
Over 2 (50.8) to 4 (101.6), incl	0.047 (1.19)	0.031 (0.79)
Over 4 (101.6)	0.125 (3.18)	0.063 (1.60)
Rod, rough-turned or rough-ground:		
Under 1 (25.4)	0.005 (0.13)	0.005 (0.13)
1 (25.4) and over	0.031 (0.79)	0
Forging quality rod:[B]		
Under 1 (25.4)	0.005 (0.13)	0.005 (0.13)
1 (25.4) and over	0.031 (0.79)	0

[A] Dimensions apply to diameter of rods, to distance between parallel surfaces of hexagons and squares, and separately to width and thickness of rectangles.

[B] Spot grinding is permitted to remove minor surface imperfections. The depth of these spot ground areas shall not exceed 3% of the diameter of the rod.

TABLE 5
NORMAL MACHINING ALLOWANCES FOR HOT-WORKED MATERIAL

Finished-Machined Dimensions for Finishes as Indicated Below, in. (mm)[A]	Normal Machining Allowance, in. (mm)			
	On Diameter, for Rods	Distance Between Parallel Surface, for Hexagonal and Square Bar	For Rectangular Bar	
			On Thickness	On Width
Hot-worked:[B]				
Up to 7/8 (22.2), incl	1/8 (3.2)	1/8 (3.2)	1/8 (3.2)	3/16 (4.8)
Over 7/8 to 1 7/8 (22.2 to 47.6), incl	1/8 (3.2)	3/16 (4.8)	1/8 (3.2)	3/16 (4.8)
Over 1 7/8 to 2 7/8 (47.6 to 73.0), incl	3/16 (4.8)	1/4 (6.4)	...	3/16 (4.8)
Over 2 7/8 to 3 13/16 (73.0 to 96.8), incl	1/4 (6.4)	...	...	3/16 (4.8)
Over 3 13/16 (96.8)	1/4 (6.4)	...	...	3/8 (9.5)
Hot-worked rods:				
Rough-turned or Rough-ground:[C]				
15/16 to 4 (23.8 to 101.6), incl in diameter	1/16 (1.6)	...	...	...
Over 4 to 12 (101.6 to 304.8), incl in diameter	1/8 (3.2)	...	...	...

[A] Dimensions apply to diameter of rods, to distance between parallel surfaces of hexagonal and square bar, and separately to width and thickness of rectangular bar.

[B] The allowances for hot-worked material in Table 5 are recommended for rods machined in lengths of 3 ft (0.91 m) or less and for bars machined in lenghts of 2 ft (0.61 m) or less. Hot-worked material to be machined longer lengths should be specified showing the finished cross-sectional dimension and the length in which the material will be machined in order that the manufacturer may supply material with sufficient oversize, including allowance for out-of-straightness.

[C] Applicable to 3 ft (0.91 m) max length.

TABLE 6
PERMISSIBLE VARIATIONS IN LENGTH OF RODS AND BARS

Random mill lengths:	
Hot-worked	6 to 24 ft (1.83 to 7.31 m) long with not more than 25 weight % between 6 and 9 ft (1.83 and 2.74 m)[A]
Cold-worked	6 to 20 ft (1.83 to 6.1 m) long with not more than 25 weight % between 6 and 10 ft (1.83 and 3.05 m).
Multiple lengths	Furnished in multiples of a specified unit length, within the length limits indicated above. For each multiple, an allowance of 1/4 in. (6.4 mm) will be made for cutting, unless otherwise specified. At the manufacturer's option, individual specified unit lengths may be furnished.
Nominal lengths	Specified nominal lengths having a range of not less than 2 ft (610 mm) with no short lengths allowed.[B]
Cut lengths	A specified length to which all rods and bars will be cut with a permissible variation of + 1/8 in. (3.2 mm). – 0 for sizes 8 in. (203 mm) and less in diameter or distance between parallel surfaces. For larger sizes, the permissible variation shall be + 1/4 in. (6.4 mm), – 0.

[A] For hot-worked sections weighing over 25 lb/ft (37 kg/m) and for smooth forged products, all sections, short lengths down to 2 ft (610 mm) may be furnished.

[B] For cold-worked rods and bars under 1/2 in. (12.7 mm) in diameter or distance between parallel surfaces ordered to nominal or stock lengths with a 2 ft (610 mm) range, at least 93% of such material shall be within the range specified; the balance may be in shorter lengths but in no case shall lengths less than 4 ft (1220 mm) be furnished.

TABLE 7
PERMISSIBLE VARIATIONS IN STRAIGHTNESS OF COLD-WORKED RODS AND BARS

Specified Diameter or Distance Between Parallel Surfaces, in. (mm)[4]	Permissible Variations in Lengths Indicated, in. (mm)
Rounds:	Depth of Chord:
½ (12.7) to 4 (101.6), incl	0.030 (0.76) per ft (305 mm) of length
Hexagons, square, rectangles:	
½ (12.7) to 4 (101.6), incl	0.030 (0.76) per ft (305 mm) of length

[4] Material under ½ in. (12.7 mm) shall be reasonably straight and free of sharp bends and kinks.

ends; material ordered to cut lengths will be furnished with square saw-cut or machined ends.

7.6 *Straightness:*

7.6.1 The permissible variations in straightness of cold-worked rod and bar as determined by the departure from straightness shall be as prescribed in Table 7.

7.6.2 The permissible variations in straightness of precision straightened cold-worked rod as determined by the departure from straightness shall be as prescribed in Table 8.

7.6.2.1 In determining straightness in the standard 42-in. (1.07-m) distance between supports or, when specified, in determining straightness in lengths not in excess of those shown in Table 8, the rod shall be placed on a precision table equipped with ballbearing rollers and a micrometer or dial indicator. The rod shall then be rotated slowly against the indicator, and the deviation from straightness in any portion of the rod between the supports shall not exceed the permissible variations prescribed in Table 8. The deviation from straightness (throw in one revolution) is defined as the difference between the maximum and minimum readings of the dial indicator in one complete revolution of the rod.

7.6.3 The permissible variations in straightness of hot-worked rod and bar as determined by the departure from straightness shall be as specified in Table 9.

8. Workmanship, Finish, and Appearance

8.1 The material shall be uniform in quality and condition, smooth, commercially straight or flat, and free of injurious imperfections.

9. Sampling

9.1 *Lot — Definition:*

9.2 A lot for chemical analysis shall consist of one heat.

9.2.1 A lot for mechanical properties testing shall consist of all material from the same heat, nominal diameter of thickness, and condition.

9.2.1.1 Where material cannot be identified by heat, a lot shall consist of not more than 500 lb (227 kg) of material in the same size and condition.

9.3 *Test Material Selection:*

9.3.1 *Chemical Analysis* — Representative samples from each lot shall be taken during pouring or subsequent processing.

TABLE 8
PERMISSIBLE VARIATIONS IN STRAIGHTNESS OF PRECISION-STRAIGHTENED COLD-WORKED NICKEL (UNS N02200) SHAFTING

Specified Diameter of Shafting, in.	Standard Distance Between Supports	Permissible Variations (Throw in One Revolution) from Straightness, in.
½ to 15/16, incl	42 in.	0.005
Over 15/16 to 1 15/16, incl	42 in.	0.006
Over 1 15/16 to 2½, incl	42 in.	0.007
Over 2½ to 4, incl	42 in.	0.008
¾ to 15/16, incl	Specified lengths of 3 to 10 ft	0.004 + 0.0025 for each foot or fraction thereof in excess of 3 ft.
Over 15/16 to 4, incl	Specified lengths of 20 ft and less	0.005 + 0.0015 for each foot or fraction thereof in excess of 3 ft.
Specified Diameter of Shafting, mm	**Standard Distance Between Supports**	**Permissible Variations (Throw in One Revolution) from Straightness, mm**
12.7 to 23.8 incl	1067 mm	0.13
Over 23.8 to 49.2, incl	1067 mm	0.15
Over 49.2 to 63.5, incl	1067 mm	0.18
Over 63.5 to 101.6, incl	1067 mm	0.20
19.1 to 23.8 incl	specified lengths of 914 to 3050 mm	10.2 + 0.2 for each metre or fraction thereof in excess of 914 mm
Over 23.8 to 101.6, incl	specified lengths of 6100 mm and less	12.7 + 0.13 for each metre or fraction thereof in excess of 914 mm

TABLE 9
PERMISSIBLE VARIATIONS IN STRAIGHTNESS OF HOT-WORKED RODS AND BARS[A]

Finish	Permissible Variations, in./ft. (mm/m)[B]
Rods and bars, hot-worked	0.050 (4.2)[C]
Rounds—hot-worked, rough-ground, or rough-turned	0.050 (4.2)[C]

[A] Not applicable to forging quality.
[B] Material under ½ in. (12.7 mm) shall be reasonably straight and free of sharp bends and kinks.
[C] The maximum curvature (depth of chord) shall not exceed the values indicated multiplied by the length in feet.

9.3.1.1 Product (check) analysis shall be wholly the responsibility of the purchaser.

9.3.2 *Mechanical Properties* — Samples of the material to provide test specimens for mechanical properties shall be taken from such locations in each lot as to be representative of that lot.

10. Number of Tests

10.1 *Chemical Analysis* — One test per lot.

10.2 *Tension* — One test per lot.

10.3 *Hardness* — One test per lot.

11. Specimen Preparation

11.1 Tension test specimens shall be taken from material in the final condition and tested in the direction of fabrication.

11.1.1 All rod and bar shall be tested in full cross-section size when possible. When a full cross-section size test cannot be performed, the largest possible round specimen shown in Test Methods E 8 shall be used. Longitudinal strip specimens shall be prepared in accordance with Test Methods E 8 for rectangular bar up to ½ in. (12.7 mm), inclusive, in thicknesses that are too wide to be pulled full size.

11.2 Hardness test specimens shall be taken from material in the final condition.

11.3 In order that the hardness determinations may be in reasonable close agreement, the following procedure is suggested:

11.3.1 For rod, under ½ in. (12.7 mm) in diameter, hardness readings shall be taken on a flat surface prepared by filing or grinding approximately 1/16 in. (1.6 mm) from the outside surface of the rod.

11.3.2 For rod, ½ in. (12.7 mm) in diameter and larger, and for hexagonal, square, and rectangular bar, all sizes, hardness readings shall be taken on a cross section midway between the surface and center of the section.

12. Test Methods

12.1 The chemical composition, mechanical, and other properties of the material as enumerated in this specification shall be determined, in case of disagreement, in accordance with the following methods:

Test	ASTM Designation
Chemical Analysis	E 39
Tension	E 8
Rockwell Hardness	E 18
Hardness Conversion	E 140
Rounding Procedure	E 29

12.2 For purposes of determining compliance with the specified limits for requirements of the properties listed in the following table, an observed value or a calculated value shall be rounded as indicated below, in accordance with the rounding method of Practice E 29:

Test	Rounded Unit for Observed or Calculated Value
Chemical composition, hardness, and tolerances (when expressed in decimals)	Nearest unit in the last right-hand place of figures of the specified limit. If two choices are possible, as when the digits dropped are exactly a 5, or a 5 followed only by zeros, choose the one ending in an even digit, with zero defined as an even digit.
Tensile strength and yield strength	Nearest 1000 psi (6.9 MPa)
Elongation	Nearest 1%

13. Inspection

13.1 Inspection of the material shall be made as agreed upon between the manufacturer and the purchaser as part of the purchase contract.

14. Rejection and Rehearing

14.1 Material that fails to conform to the requirements of this specification may be rejected. Rejection should be reported to the producer or supplier promptly and in writing. In case of dissatisfaction with the results of the

test, the producer or supplier may make claim for a rehearing.

15. Certification

15.1 A manufacturer's certification shall be furnished to the purchaser stating that material has been manufactured, tested, and inspected in accordance with this specification, and that the test results on representative samples meet specification requirements. A report of the test results shall be furnished.

16. Product Marking

16.1 The following information shall be marked on the material or included on the package, or on a label or tag attached thereto: The name of the material or UNS Number, heat number, condition (temper), ASTM Specification B 160, the size, gross, tare, and net weight, consignor and consignee address, contract or order number, or such other information as may be defined in the contract or order.

APPENDIX

(Nonmandatory Information)

X1. CONDITIONS AND FINISHES

X1.1 The various conditions and finishes in which nickel (UNS N02200) and low-carbon nickel (UNS N02201) rods and bars are procurable are as indicated below.

X1.2 Low-carbon nickel (UNS N02201) is intended essentially for fused caustic and other fused salts and for temperatures above 600°F (316°C). For such applications the manufacturer should be consulted.

X1.2.1 *Hot-Worked* — With a tightly adherent, black, mill oxide surface.

X1.2.2 *Hot-Worked, Rough-Ground* — Similar to X1.2.1 except rough-ground.

X1.2.3 *Hot-Worked, Rough-Turned* — Similar to X1.2.1 except rough-turned with a broad-nosed tool similar to a bar peeling operation and thus may not be straight. Intended generally for machining where an overhauled surface is desired, essentially for machined step down shafts or parts machined in short lengths of 3 ft (914 mm) or less.

X1.2.4 *Hot-Worked Forging Quality* — Rough-turned and spot-ground, as necessary, for sizes 1 in. (25.4 mm) in diameter and over; rough-ground and spot-ground for sizes under 1 in. in diameter. Material is selected from heats of known, good hot malleability.

NOTE X1.1 — For sizes 4 in. (101.6 mm) in diameter and less, cold-worked rod may be used also for forging by virtue of the fact such rod have been overhauled for removal of mechanical surface defects prior to cold drawing. In such cases, the user should run pilot forging tests to ensure himself that such material has the desired hot-malleability range.

X1.2.5 *Hot-Worked, Annealed* — Soft with a tightly adherent oxide that may vary from dark to light.

X1.2.6 *Hot-Worked, Annealed and Pickled* — Same as X1.2.5 except descaled for removal of mill oxide. Provides for better surface inspection than does hot-worked material and often employed where welding is involved where removal of mill oxide is desired.

NOTE X1.2 — Annealing prior to pickling may be required in order to reduce the mill oxide since uniform pickling of an unreduced oxide is difficult.

X1.2.7 *Cold-Worked, As-worked* — Hot-worked overhauled, cold-worked, and straightened with a smooth bright finish.

X1.2.8 *Cold-Worked, Annealed* — Hot-worked overhauled, cold-worked, and straightened. Annealed for softness and with a dull matte finish.

SPECIFICATION FOR NICKEL SEAMLESS PIPE AND TUBE

SB-161

(Identical with ASTM Specification B 161-93 except for deletion of 1.1.1 and Appendix X1, and editorial differences. Certification has been made mandatory.)

1. Scope

1.1 This specification covers nickel (UNS N02200) and low-carbon nickel (UNS N02201) in the form of cold-worked seamless pipe and tube in the conditions shown in Table 1.

1.2 The values stated in inch-pound units are to be regarded as the standard. The values given in parentheses are for information only.

2. Referenced Documents

2.1 *ASTM Standards:*

E 8 Test Methods of Tension Testing of Metallic Materials

E 29 Practice for Using Significant Digits in Test Data to Determine Conformance with Specifications

E 39 Test Methods for Chemical Analysis of Nickel

3. Terminology

3.1 *Descriptions of Terms Specific to This Standard:*

3.1.1 *average diameter* — the average of the maximum and minimum outside diameters, as determined at any one cross section of the pipe or tube.

3.1.2 *pipe* — tube conforming to the particular dimensions commercially known as pipe sizes, see Table X1.1.

3.1.3 *seamless pipe or tube* — a pipe or tube produced with a continuous periphery in all stages of the operations.

3.1.4 *tube* — a hollow product of round or any other cross section having a continuous periphery.

4. Ordering Information

4.1 Orders for material to this specification shall include information with respect to the following:

4.1.1 Alloy name or UNS number.

4.1.2 Specification designation.

4.1.3 *Condition* (see Appendix X2).

4.1.4 *Finish* (see Appendix X2).

4.1.5 *Dimensions:*

4.1.5.1 *Tube* — Specify outside diameter and nominal or minimum wall.

4.1.5.2 *Pipe* — Specify standard pipe size and schedule.

4.1.5.3 *Length* — Cut to length or random.

4.1.6 *Quantity* — Feet or number of pieces.

4.1.7 *Hydrostatic Pressure Requirements* — Specify test pessure if other than required by 12.3.1.

4.1.8 *Samples for Product (Check) Analysis* — State whether samples for product (check) analysis should be furnished (see 5.2).

4.1.9 *Purchaser Inspection* — If purchaser wishes to witness tests or inspection of material at place of manufacture, the purchase order must so state indicating which tests or inspections are to be witnessed (Section 13).

5. Chemical Composition

5.1 The material shall conform to the composition limits specified in Table 2.

5.2 If a product (check) analysis is performed by the purchaser, the material shall conform to the product (check) analysis variations in Table 2.

TABLE 1
MECHANICAL PROPERTIES

Condition and Size	Tensile Strength, min, psi (MPa)		Yield Strength (0.2 % offset), min, psi (MPa)		Elongation in 2 in. or 50 mm (or 4*D*), min, %	
	Nickel (UNS N02200)	Low-Carbon Nickel (UNS N02201)	Nickel (UNS N02200)	Low-Carbon Nickel (UNS N02201)	Nickel (UNS N02200)	Low-Carbon Nickel (UNS N02201)
Annealed:						
5 in. (127 mm) and under outside diameter	55 000 (380)	50 000 (345)	15 000 (105)	12 000 (80)	35	35
Over 5 in. (127 mm) in outside diameter	55 000 (380)	50 000 (345)	12 000 (80)	10 000 (70)	40	40
Stress-Relieved:						
All sizes	65 000 (450)	60 000 (415)	40 000 (275)	30 000 (205)	15	15

TABLE 2
CHEMICAL REQUIREMENTS

Element	Composition,%		Product (Check) Analysis Variations, under min or over max, or the Specified Limit of Element
	Nickel (UNS N02200)	Low-Carbon Nickel (UNS N02201)	
Ni,[A] min	99.0	99.0	0.60
Cu, max	0.25	0.25	0.03
Fe, max	0.40	0.40	0.03
Mn, max	0.35	0.35	0.03
C, max	0.15	...	0.01
C, max	...	0.02	0.005
Si, max	0.35	0.35	0.03
S, max	0.01	0.01	0.003

[A] Element shall be determined arithmetically by difference.

6. Mechanical and Other Properties

6.1 *Tension Test* — The material shall conform to the tensile properties specified in Table 1.

6.2 *Hydrostatic Test* — If any pipe or tube shows leaks during hydrostatic testing, it shall be rejected.

7. Dimensions and Permissible Variations

7.1 *Diameter and Wall Thickness* — The permissible variations in the outside diameter and wall thickness shall conform to the permissible variations prescribed in Table 3.

7.2 *Length* — When material is ordered cut-to-length, the length shall conform to the permissible variations prescribed in Table 4.

7.3 *Straightness* — Material shall be reasonably straight and free of bends and kinks.

7.4 *Ends* — Ends shall be plain cut and deburred.

8. Workmanship, Finish, and Appearance

8.1 The material shall be uniform in quality and temper, smooth, commercially straight, and free of injurious imperfections.

9. Sampling

9.1 *Lot Definition:*

9.1.1 A lot for chemical analysis shall consist of one heat.

9.1.2 A lot for all other testing shall consist of all material from the same heat, nominal size (excepting length), and condition.

9.1.2.1 Where material cannot be identified by heat, a lot shall consist of not more than 500 lb (227 kg) of material in the same condition and nominal size (excepting length).

9.2 *Test Material Selection:*

9.2.1 *Chemical Analysis* — Representative samples from each lot shall be taken during pouring or subsequent processing.

9.2.1.1 Product (check) analysis shall be wholly the responsibility of the purchaser.

9.2.2 *Mechanical and Other Properties* — Samples of the material to provide test specimens for mechanical and other properties shall be taken from such locations in each lot as to be representative of that lot. Test specimens shall be taken from material in the final condition.

10. Number of Tests

10.1 *Chemical Analysis* — One test per lot.

10.2 *Tension* — One test per lot.

10.3 *Hydrostatic* — Each piece in each lot.

11. Specimen Preparation

11.1 *Room-Temperature Tension Specimen* — Material shall be tested in the direction of fabrication. Whenever possible, all pipe and tube shall be tested in full tubular size. When testing in full tubular size is not possible, longitudinal strip specimens, or the largest possible round specimen, shall be used. In the event of disagreement when full tubular testing is not possible, a longitudinal strip specimen with reduced gauge length as contained in Test Methods E 8 shall be used.

TABLE 3
PERMISSIBLE VARIATIONS FOR OUTSIDE DIAMETER AND WALL THICKNESS OF SEAMLESS COLD-WORKED PIPE AND TUBE[A,B]

Nominal Outside Diameter, in. (mm)	Permissible Variations					
	Outside Diameter, in. (mm)		% of Thickness of Specified Nominal Wall		% of Thickness of Specified Minimum Wall	
	Plus	Minus	Plus	Minus	Plus	Minus
Over 0.400 (10) to 5/8 (16), excl	0.005 (0.13)	0.005 (0.13)	15.0	15.0	30	0
5/8 (16) to 1 1/2 (38), incl	0.0075 (0.19)	0.0075 (0.19)	10.0	10.0	22	0
Over 1 1/2 (38) to 3 (76), incl	0.010 (0.25)	0.010 (0.25)	10.0	10.0	22	0
Over 3 (76) to 4 1/2 (114), incl	0.015 (0.38)	0.015 (0.38)	10.0	10.0	22	0
Over 4 1/2 (114) to 6 (152), incl	0.020 (0.51)	0.020 (0.51)	12.5	12.5	28	0
Over 6 (152) to 6 5/8 (168), incl	0.025 (0.64)	0.025 (0.64)	12.5	12.5	28	0
Over 6 5/8 (168) to 8 5/8 (219), incl	0.031 (0.79)	0.031 (0.79)	12.5	12.5	28	0

[A] *Ovality* — The permissible variations in this table apply to individual measurements, including out-of-roundness (ovality) except for the following:

For pipe and tube having a nominal wall thickness of 3% or less of the nominal outside diameter, the mean outside diameter shall conform to the permissible variations of this table and individual measurements (including ovality) shall conform to the plus and minus values of the table, with the values increased by 0.5% of the nominal outside diameter. For pipe and tube over 4 1/2 in. (114 mm) in outside diameter with a nominal wall thickness greater than 3% of the nominal outside diameter, the mean outside diameter shall conform to the permissible variations of this table and individual measurements shall not exceed twice the permissible variations of the table.

[B] *Eccentricity* — The permissible variations in this table apply to individual measurements including eccentricity.

TABLE 4
PERMISSIBLE VARIATIONS IN LENGTH[A]

Outside Diameter, in. (mm)	Cut Length, in. (mm)	
	Over	Under
Under 2 (50.8)	1/8 (3.2)	0
2 (50.8) and over	3/16 (4.8)	0

[A] These permissible variations in length apply to pipe or tube in straight lengths. They apply to cut lengths up to and including 24 ft (7.3 m). For lengths over 24 ft an additional over-tolerance of 1/8 in. (3.2 mm) for each 10 ft (3.0 m) or fraction thereof shall be permissible up to a maximum additional over-tolerance of 1/2 in. (12.7 mm).

12. Test Methods

12.1 *Chemical Composition* — In case of disagreement, the chemical composition shall be determined in accordance with Test Methods E 39.

12.2 *Tension Test* — Tension testing shall be conducted in accordance with Test Methods E 8.

12.3 *Hydrostatic Test* — Each pipe or tube with an outside diameter 1/8 in. (3 mm) and larger and with wall thickness of 0.015 in. (0.38 mm) and over shall be tested by the manufacturer to an internal hydrostatic pressure of 1000 psi (6.9 MPa) provided that the fiber stress calculated in accordance with the following equation does not exceed the allowable fiber stress, S, indicated below:

$$P = 2St/D$$

Where:

P = hydrostatic test pressure, psi (or MPa),
S = allowable fiber stress, for material in the condition (temper) furnished as follows:

	UNS N02200	UNS N02201
Annealed:		
5 in. (127 mm) outside diameter and under	10 000 psi (70 MPa)	8000 psi (55 MPa)
Over 5 in. outside diameter	8000 psi (55 MPa)	6700 psi (45 MPa)
Stress-Relieved:		
All sizes	16 200 psi (110 MPa)	15 000 psi (105 MPa)

t = minimum wall thickness, in. (or mm), equal to the specified nominal wall minus the permissible minus wall tolerance, or the specified minimum wall thickness, and,
D = outside diameter of the pipe or tube, in. (or mm).

12.3.1 When so agreed upon between the manufacturer and purchaser, pipe or tube may be tested to 1 1/2 times the allowable fiber stress given above.

12.4 *Rounding Method* — For purposes of determining compliance with the specified limits for requirements of the properties listed in the following table, an observed value, or a calculated value, shall be rounded as indicated below, in accordance with the rounding method of Practice E 29:

Test	Rounded Unit for Observed or Calculated Value
Chemical composition and tolerances (when expressed in decimals)	nearest unit in the last right-hand place of figures of the specified limit. If two choices are possible, as when the digits dropped are exactly a 5 or a 5 followed only by zeros, choose the one ending in an even digit, with zero defined as an even digit.
Tensile strength, yield strength	nearest 1000 psi (6.9 MPa)
Elongation	nearest 1%

13. Inspection

13.1 Inspection of the material shall be agreed upon between the purchaser and the supplier as part of the purchase contract.

14. Rejection and Rehearing

14.1 Material that fails to conform to the requirements of this specification may be rejected. Rejection should be reported to the producer or supplier promptly and in writing. In case of dissatisfaction with the results of the test, the producer or supplier may make claim for a rehearing.

15. Certification

15.1 Certification shall be furnished to the purchaser that the material was manufactured, sampled, tested, and inspected in accordance with this specification and has been found to meet the requirements. When specified in the purchase order or contract, a report of the test results shall be furnished.

16. Product Marking

16.1 The following information shall be marked on the material or included on the package, or on a label or tag attached thereto: the name of the material or UNS number, heat number, condition this specification number (temper), the size, gross, tare and net weight, consignor and consignee address, contract or order number, or such other information as may be defined in the contract or order.

APPENDIXES

(Nonmandatory Information)

X1. PIPE SCHEDULES

X1.1 The schedules of pipe shown in Table X1.1 are regularly available. Other schedules may be furnished, and the manufacturer should be consulted. Table X1.1 is published for information only.

X2. CONDITIONS AND FINISHES NORMALLY SUPPLIED

X2.1 Scope

X2.1.1 This Appendix lists the conditions and finishes in which pipe and tube (other than converter sizes) are normally supplied. These are subject to change, and the manufacturer should be consulted for the latest information available.

X2.2 Nickel (UNS N02200)

X2.2.1 *Annealed* — Soft, with a dull matte finish.

X2.2.2 *Stress-Relieved* — Thermally treated below the annealing temperature to relieve the major portion of the internal stresses, with a thin, light to medium-dark surface.

X2.3 Low-Carbon Nickel (UNS N02201)

X2.3.1 *Annealed* — Similar to X2.2.1.

X2.3.2 *Stress-Relieved* — Similar to X2.2.2.

TABLE X1.1
PIPE SCHEDULES[A]

Nominal Pipe Size	Outside Diameter	Nominal Wall Thickness, in. (mm)			
		Schedule No. 5	Schedule No. 10	Schedule No. 40	Schedule No. 80
1/8	0.405 (10.3)	...	0.049 (1.2)	0.068 (1.7)	0.095 (2.4)
1/4	0.540 (13.7)	...	0.065 (1.6)	0.088 (2.2)	0.119 (3.0)
3/8	0.675 (17.1)	...	0.065 (1.6)	0.091 (2.3)	0.126 (3.2)
1/2	0.840 (21.3)	0.065 (1.6)	0.083 (2.1)	0.109 (2.8)	0.147 (3.7)
3/4	1.050 (26.7)	0.065 (1.6)	0.083 (2.1)	0.113 (2.8)	0.154 (3.9)
1	1.315 (33.4)	0.065 (1.6)	0.109 (2.8)	0.133 (3.4)	0.179 (4.5)
1 1/4	1.660 (42.2)	0.065 (1.6)	0.109 (2.8)	0.140 (3.6)	0.191 (4.8)
1 1/2	1.900 (48.3)	0.065 (1.6)	0.109 (2.8)	0.145 (3.7)	0.200 (5.1)
2	2.375 (60.3)	0.065 (1.6)	0.109 (2.8)	0.154 (3.9)	0.218 (5.5)
2 1/2	2.875 (73.0)	0.083 (2.1)	0.120 (3.0)	0.203 (5.2)	0.276 (7.0)
3	3.500 (88.9)	0.083 (2.1)	0.120 (3.0)	0.216 (5.5)	0.300 (7.6)
3 1/2	4.000 (101.6)	0.083 (2.1)	0.120 (3.0)	0.226 (5.7)	0.318 (8.1)
4	4.500 (114.3)	0.083 (2.1)	0.120 (3.0)	0.237 (6.0)	0.337 (8.6)
5	5.563 (141.3)	0.109 (2.8)	0.134 (3.4)	0.258 (6.5)	0.375 (9.5)
6	6.625 (168.3)	0.109 (2.8)	0.134 (3.4)	0.280 (7.1)	0.432 (10.9)
8	8.625 (219.1)	...	...	0.322 (8.2)	0.500 (12.7)

[A] The pipe schedules shown above conform with standards adopted by the American National Standards Institute.

SPECIFICATION FOR NICKEL PLATE, SHEET, AND STRIP

SB-162

(Identical with ASTM Specification B 162-99 except that certification has been made mandatory.)

1. Scope

1.1 This specification covers rolled nickel (UNS N02200) and low-carbon nickel (UNS N02201) plate, sheet, and strip.

1.2 The values stated in inch–pound units are to be regarded as the standard. The other values given are for information only.

2. Referenced Documents

2.1 *ASTM Standards:*

B 160 Specification for Nickel Rod and Bar

B 880 General Requirements for Chemical Check Analysis of Nickel, Nickel Alloys, and Cobalt Alloys

E 8 Test Methods for Tension Testing of Metallic Materials

E 10 Test Method for Brinell Hardness of Metallic Materials

E 18 Test Methods for Rockwell Hardness and Rockwell Superficial Hardness of Metallic Materials

E 29 Practice for Using Significant Digits in Test Data to Determine Conformance with Specifications

E 39 Test Methods for Chemical Analysis of Nickel

E 112 Test Methods for Determining the Average Grain Size

E 140 Hardness Conversion Tables for Metals

F 155 Test Method for Temper of Strip and Sheet Metals for Electronic Devices (Spring-Back Method)

3. Terminology

3.1 *Descriptions of Terms Specific to This Standard:*

3.1.1 The terms given in Table 1 shall apply.

4. Ordering Information

4.1 It is the responsibility of the purchaser to specify all requirements that are necessary for the safe and satisfactory performance of material ordered under this spcification. Examples of such requirements include, but are not limited to, the following:

4.1.1 *Alloy* — Name and UNS number. (See Table 2.)

4.1.2 *ASTM designation* , including year of issue.

4.1.3 *Condition* (See 6.1, 6.2, and Appendix X1.)

4.1.4 *Finish* (See Appendix X1.)

4.1.5 *Dimensions* — Thickness, width, and length.

4.1.6 *Quantity.*

4.1.7 *Optional Requirements:*

4.1.7.1 *Sheet and Strip* — Whether to be furnished in coil, in cut straight lengths, or in random straight lengths.

4.1.7.2 *Strip* — Whether to be furnished with commercial slit edge, square edge, or round edge.

4.1.7.3 *Plate* — Whether to be furnished specially flattened (see 7.7.2); also how plate is to be cut (see 7.2.1 and 7.3.2.)

4.1.8 *Fabrication Details* — Not mandatory but helpful to the manufacturer.

4.1.8.1 *Welding or Brazing* — Process to be employed.

4.1.8.2 *Plate* — Whether material is to be hot-formed.

4.1.9 *Certification* — Certification and a report of test results are required (see Section 15).

4.1.10 *Samples for Product (Check) Analysis* — Whether samples for product (check) analysis should be furnished (see 5.2).

TABLE 1
PRODUCT DESCRIPTION

Product	Thickness, in. (mm)	Width, in. (mm)
Hot-rolled plate[A]	3/16 and over (Tables 5 and 6)	(Table 8)[B]
Hot-rolled sheet[A]	0.018 to 0.250 (0.46 to 6.4), incl (Table 7)	(Table 10)
Cold-rolled sheet[C]	0.018 to 0.250 (0.46 to 6.4), incl (Table 7)	(Table 10)
Cold-rolled strip[C]	0.005 to 0.250 (0.13 to 6.4), incl (Table 7)	(Table 10)

[A] Material 3/16 to 1/4 in. (4.8 to 6.4 mm), incl, in thickness may be furnished as sheet or plate provided the material meets the specification requirements for the condition ordered.

[B] Hot-rolled plate, in widths 10 in. (254 mm) and under, may be furnished as hot-finished rectangles with sheared or cut edges in accordance with Specification B 160, provided the mechanical property requirements of this specification are met.

[C] Material under 48 in. (1219 mm) in width may be furnished as sheet or strip provided the material meets the specification requirements for the condition ordered.

TABLE 2
CHEMICAL REQUIREMENTS

Element	Composition, % Nickel (UNS N02200)	Composition, % Low-Carbon Nickel (UNS N02201)
Nickel,[A] min	99.0	99.0
Copper, max	0.25	0.25
Iron, max	0.40	0.40
Manganese, max	0.35	0.35
Carbon, max	0.15	...
Carbon, max	...	0.02
Silicon, max	0.35	0.35
Sulfur, max	0.01	0.01

[A] Element shall be determined arithmetically by difference.

4.1.11 *Purchaser Inspection* — If the purchaser wishes to witness tests or inspection of material at the place of manufacture, the purchase order must so state indicating which tests or inspections are to be witnessed (see Section 13).

5. Chemical Compositions

5.1 The material shall conform to the requirements as to chemical composition prescribed in Table 2.

5.2 If a product (check) analysis is performed by the purchaser, the material shall be done per ASTM B 880 and the material shall conform to the product (check) analysis variations defined in Table 1 of ASTM B 880.

6. Mechanical and Other Requirements

6.1 *Mechanical Properties* — The material shall conform to the requirements for mechanical properties prescribed in Table 3.

6.2 *Deep-Drawing and Spinning Quality Sheet and Strip* — The material shall conform to the requirements for grain size and hardness properties prescribed in Table 4.

6.2.1 The mechanical properties of Table 3 do not apply to deep-drawing and spinning quality sheet and strip.

7. Dimensions and Permissible Variations

7.1 *Thickness and Weight:*

7.1.1 *Plate* — For plate up to 2 in. (50.8 mm), inclusive, in thickness, the permissible variation under the specified thickness and permissible excess in overweight shall not exceed the amounts prescribed in Table 5.

7.1.1.1 For use with Table 5, plate shall be assumed to weigh 0.321 lb/in.^{3} (8.89 g/cm^3).

7.1.2 *Plate* — For plate over 2 in. (50.8 mm) in thickness, the permissible variations over the specified thickness shall not exceed the amounts prescribed in Table 6.

7.1.3 *Sheet and Strip* — The permissible variations in thickness of sheet and strip shall be as prescribed in Table 7. The thickness of strip and sheet shall be measured with the micrometer spindle 3/8 in. (9.5 mm) or more from either edge for material 1 in. (25.4 mm) or over in width and at any place on the strip under 1 in. in width.

7.2 *Width and Diameter:*

7.2.1 *Plate* — The permissible variations in width of rectangular plates and diameter of circular plates shall be as prescribed in Tables 8 and 9.

7.2.2 *Sheet and Strip* — The permissible variations in width for sheet and strip shall be as prescribed in Table 10.

TABLE 3
MECHANICAL PROPERTIES FOR PLATE, SHEET, AND STRIP (ALL THICKNESSES AND SIZES UNLESS OTHERWISE INDICATED)

Condition (Temper)	Tensile Strength, min, psi (MPa)	Yield[A] Strength (0.2 % offset), min, psi (MPa)	Elongation in 2 in. or 50 mm, or 4*D*, min, %	Rockwell Hardness (B Scale)[B,C]
Nickel (UNS N02200) Hot-Rolled Plate				
Annealed	55 000 (380)	15 000 (100)	40	...
As-rolled[D,E]	55 000 (380)	20 000 (135)	30	...
Nickel (UNS N02200) Hot-Rolled Sheet				
Annealed	55 000 (380)	15 000 (100)	40[F]	...
Nickel (UNS N02200) Cold-Rolled Sheet				
Annealed	55 000 (380)	15 000 (100)	40[F]	...
Quarter-hard	...	...	...	70 to 80
Half-hard	...	...	...	79 to 86
Hard	90 000 (620)	70 000 (480)	2	...
Nickel (UNS N02200) Cold-Rolled Strip				
Annealed	55 000 (380)[G]	15 000 (100)	40[F,G]	...
Skin-hard	...	...	...	64 to 70
Quarter-hard	...	...	...	70 to 80
Half-hard	...	...	...	79 to 86
Three-quarter-hard	...	...	...	85 to 91
Hard	90 000 (620)[G]	70 000 (480)	2[G]	...
Spring temper	...	...	...	95 min
Low-Carbon Nickel (UNS N02201) Hot-Rolled Plate				
Annealed	50 000 (345)	12 000 (80)	40	...
As-rolled[D,E]	50 000 (345)	12 000 (80)	30	...
Low-Carbon Nickel (UNS N02201) Hot-Rolled Sheet				
Annealed	50 000 (345)	12 000 (80)	40[F]	...
Low-Carbon Nickel (UNS N02201) Cold-Rolled Sheet				
Annealed	50 000 (345)	12 000 (80)	40[F]	...
Low-Carbon Nickel (UNS N02201) Cold-Rolled Strip				
Annealed	50 000 (345)[G]	12 000 (80)	40[F,G]	...

[A] Yield strength requirements do not apply to material under 0.020 in. (0.51 mm) in thickness.

[B] For Rockwell or equivalent hardness conversions see Hardness Conversion Tables E 140.

[C] Caution should be observed in using the Rockwell test on thin material, as the results may be affected by specimen thickness. For thicknesses under 0.050 in. (1.3 mm), the use of the Rockwell superficial or the Vickers hardness test is suggested.

[D] As-rolled plate may be given a stress-relieving heat treatment subsequent to final rolling.

[E] As-rolled plate specified "suitable for hot forming" shall be furnished from heats of known good hot-malleability characteristics (see X1.2.2). There are no applicable tensile or hardness requirements for such material.

[F] Sheet and strip 0.010 to 0.049 in. (0.25 to 1.2 mm), inclusive, in thickness shall have an elongation of 30% minimum. Sheet and strip 0.050 to 0.109 in. (1.3 to 2.7 mm), inclusive, in thickness shall have an elongation of 35% minimum.

[G] Not applicable for thickness under 0.010 in. (0.25 mm).

TABLE 4
GRAIN SIZE AND HARDNESS FOR COLD-ROLLED, DEEP-DRAWING, AND SPINNING QUALITY SHEET AND STRIP

Thickness, in. (mm)	Calculated Diameter of Average Grain Section, max		Corresponding ASTM Micro-Grain Size No.	Rockwell B[A,B] Hardness, max
	mm	in.		
Nickel (UNS N02200) Sheet [56 in. (1420 mm) Wide and Under][C]				
0.050 (1.3) and less	0.110	0.0043	3.5	64
Over 0.050 to 0.250 (1.3 to 6.4), incl	0.120	0.0047	3.0	64
Nickel (UNS N02200) Strip [12 in. (305 mm) Wide and Under][D]				
0.005[E] to 0.010 (0.13 to 0.25), incl	0.025	0.0010	7.5[F]	70[F]
Over 0.010 to 0.024 (0.25 to 0.61), incl	0.065	0.0026	5.0	68
Over 0.024 to 0.125 (0.61 to 3.2), incl	0.110	0.0043	3.5	64
Low-Carbon Nickel (UNS N02201) Strip [12 in. (305 mm) Wide and Under][D]				
0.005[E] to 0.010 (0.13 to 0.25), incl	0.030	0.0012	7.0[F]	66[F]
Over 0.010 to 0.024 (0.25 to 0.61), incl	0.075	0.0030	4.5	64
Over 0.024 to 0.125 (0.61 to 3.2), incl	0.110	0.0043	3.5	64

[A] For Rockwell or equivalent hardness conversions see Hardness Conversion Tables E 140.

[B] Caution should be observed in using the Rockwell test on thin material, as the results may be affected by specimen thickness. For thicknesses under 0.050 in. (1.3 mm), the use of the Rockwell superficial or the Vickers hardness test is suggested.

[C] There are no applicable grain size requirements for low-carbon nickel (UNS N02201) sheet. The hardness of low-carbon nickel (UNS N02201) sheet shall be not over Rockwell B64, or equivalent.

[D] Sheet requirements in Table 4 apply to strip thicknesses over 0.125 in. (3.2 mm), and for all thicknesses of strip over 12 in. (305 mm) in width.

[E] For ductility evaluations for strip under 0.005 in. (0.13 mm) in thickness, the spring-back test, such as that described in Test Method F 155, is often used and the manufacturer should be consulted.

[F] Accurate grain size and hardness determinations are difficult to make on strip under 0.005 in. (0.13 mm) in thickness and are not recommended.

TABLE 5
PERMISSIBLE VARIATIONS IN THICKNESS AND OVERWEIGHT OF RECTANGULAR PLATES

Specified Thickness, in. (mm)	Permissible Excess in Average Weight,[B,C] per Square Foot of Plates for Widths Given in Inches (millimetres) Expressed in Percentage of Nominal Weights									
	Under 48 (1220)	48 to 60 (1220 to 1520), excl	60 to 72 (1520 to 1830), excl	72 to 84 (1830 to 2130), excl	84 to 96 (2130 to 2440), excl	96 to 108 (2440 to 2740), excl	108 to 120 (2740 to 3050), excl	120 to 132 (3050 to 3350), excl	132 to 144 (3350 to 3660), excl	144 to 160 (3660 to 4070), incl
3/16 to 5/16 (4.8 to 7.9), excl	9.0	10.5	12.0	13.5	15.0	16.5	18.0	...	...	...
5/16 to 3/8 (7.9 to 9.5), excl	7.5	9.0	10.5	12.0	13.5	15.0	16.5	18.0	...	...
3/8 to 7/16 (9.5 to 11.1), excl	7.0	7.5	9.0	10.5	12.0	13.5	15.0	16.5	18.0	19.5
7/16 to 1/2 (11.1 to 12.7), excl	6.0	7.0	7.5	9.0	10.5	12.0	13.5	15.0	16.5	18.0
1/2 to 5/8 (12.7 to 15.9), excl	5.0	6.0	7.0	7.5	9.0	10.5	12.0	13.5	15.0	16.5
5/8 to 3/4 (15.9 to 19.0), excl	4.5	5.5	6.0	7.0	7.5	9.0	10.5	12.0	13.5	15.0
3/4 to 1 (19.0 to 25.4), excl	4.0	4.5	5.5	6.0	7.0	7.5	9.0	10.5	12.0	13.5
1 to 2 (25.4 to 50.8), incl	4.0	4.0	4.5	5.5	6.0	7.0	7.5	9.0	10.5	12.0

NOTE — All plates shall be ordered to thickness and not to weight per square foot. No plates shall vary more than 0.01 in. (0.25 mm) under the thickness ordered, and the overweight of each lot[A] in each shipment shall not exceed the amount given in the table. Spot grinding is permitted to remove surface imperfections, such spots not to exceed 0.01 in. (0.25 mm) under the specified thickness.

[A] The term "lot" applied to this table means all of the plates of each group width and each group thickness.

[B] The permissible overweight for lots of circular and sketch plates shall be 25% greater than the amounts given in this table.

[C] The weight of individual plates shall not exceed the nominal weight by more than 1 1/4 times the amount given in the table and Footnote *B*.

TABLE 6
PERMISSIBLE VARIATIONS IN THICKNESS FOR RECTANGULAR PLATES OVER 2 in. (50.8 mm) IN THICKNESS

	Permissible Variations, in. (mm), over Specified Thickness for Widths Given, in. (mm)					
Specified Thickness, in. (mm)	To 36 (915), excl	36 to 60 (915 to 1520), excl	60 to 84 (1520 to 2130), excl	84 to 120 (2130 to 3050), excl	120 to 132 (3050 to 3350), excl	132 (3350) and over
Over 2 to 3 (51.0 to 76.0), excl	1/16 (1.6)	3/32 (2.4)	7/64 (2.8)	1/8 (3.2)	1/8 (3.2)	9/64 (3.6)
3 to 4 (76.0 to 102.0), incl	5/64 (2.0)	3/32 (2.4)	7/64 (2.8)	1/8 (3.2)	1/8 (3.2)	9/64 (3.6)

NOTE — Permissible variation under specified thickness, 0.01 in. (0.25 mm).

TABLE 7
PERMISSIBLE VARIATIONS IN THICKNESS OF SHEET AND STRIP [PERMISSIBLE VARIATIONS, PLUS AND MINUS, IN THICKNESS, in. (mm), FOR WIDTHS GIVEN IN in. (mm)]

	Sheet[A]			
	Hot-Rolled		Cold-Rolled	
Specified Thickness, in. (mm)	48 (1220) and Under	Over 48 to 60 (1220 to 1520), incl	48 (1220) and Under	Over 48 to 60 (1220 to 1520), incl
0.018 to 0.025 (0.46 to 0.64), incl	0.003 (0.08)	0.004 (0.10)	0.002 (0.05)	0.003 (0.08)
Over 0.025 to 0.034 (0.64 to 0.86), incl	0.004 (0.10)	0.005 (0.13)	0.003 (0.08)	0.004 (0.10)
Over 0.034 to 0.043 (0.86 to 1.1), incl	0.005 (0.13)	0.006 (0.15)	0.004 (0.10)	0.005 (0.13)
Over 0.043 to 0.056 (1.1 to 1.4), incl	0.005 (0.13)	0.006 (0.15)	0.004 (0.10)	0.005 (0.13)
Over 0.056 to 0.070 (1.4 to 1.8), incl	0.006 (0.15)	0.007 (0.18)	0.005 (0.13)	0.006 (0.15)
Over 0.070 to 0.078 (1.8 to 2.0), incl	0.007 (0.18)	0.008 (0.20)	0.006 (0.15)	0.007 (0.18)
Over 0.078 to 0.093 (2.0 to 2.4), incl	0.008 (0.20)	0.009 (0.23)	0.007 (0.18)	0.008 (0.20)
Over 0.093 to 0.109 (2.4 to 2.8), incl	0.009 (0.23)	0.010 (0.25)	0.007 (0.18)	0.009 (0.23)
Over 0.109 to 0.125 (2.8 to 3.2), incl	0.010 (0.25)	0.012 (0.30)	0.008 (0.20)	0.010 (0.25)
Over 0.125 to 0.140 (3.2 to 3.6), incl	0.012 (0.30)	0.014 (0.36)	0.008 (0.20)	0.010 (0.25)
Over 0.140 to 0.171 (3.6 to 4.3), incl	0.014 (0.36)	0.016 (0.41)	0.009 (0.23)	0.012 (0.30)
Over 0.171 to 0.187 (4.3 to 4.8), incl	0.015 (0.38)	0.017 (0.43)	0.010 (0.25)	0.013 (0.33)
Over 0.187 to 0.218 (4.8 to 5.5), incl	0.017 (0.43)	0.019 (0.48)	0.011 (0.28)	0.015 (0.38)
Over 0.218 to 0.234 (5.5 to 5.9), incl	0.018 (0.46)	0.020 (0.51)	0.012 (0.30)	0.016 (0.41)
Over 0.234 to 0.250 (5.9 to 6.4), incl	0.020 (0.51)	0.022 (0.56)	0.013 (0.33)	0.018 (0.46)

	Cold-Rolled Strip[A,B]
Specified Thickness, in. (mm)	Widths 12 in. (305 mm) and under, ±
Up to 0.050 (1.3), incl	0.0015 (0.04)
Over 0.050 to 0.093 (1.3 to 2.4), incl	0.0025 (0.06)
Over 0.093 to 0.125 (2.4 to 3.2), incl	0.004 (0.11)

[A] Measured 3/8 in. (9.5 mm) or more from either edge except for strip under 1 in. (25.4 mm) in width which is measured at any place.
[B] Standard sheet tolerances apply for thicknesses over 0.125 in. (3.2 mm) and for all thicknesses of strip over 12 in. (305 mm) wide.

TABLE 8
PERMISSIBLE VARIATIONS IN WIDTH[A] OF SHEARED, PLASMA-TORCH CUT, AND ABRASIVE-CUT RECTANGULAR PLATE[B,C]

	Permissible Variations in Widths for Widths Given in in. (mm)									
	Up to 30 (760), incl		Over 30 to 72 (760 to 1830), incl		Over 72 to 108 (1830 to 2740), incl		Over 108 to 144 (2740 to 3660), incl		Over 144 to 160 (3660 to 4070), incl	
Specified Thickness	+	−	+	−	+	−	+	−	+	−
Inches										
Sheared:[D]										
3/16 to 5/16, excl	3/16	1/8	1/4	1/8	3/8	1/8	1/2	1/8	...	...
5/16 to 1/2, excl	1/4	1/8	3/8	1/8	3/8	1/8	1/2	1/8	5/8	1/8
1/2 to 3/4, excl	3/8	1/8	3/8	1/8	1/2	1/8	5/8	1/8	3/4	1/8
3/4 to 1, excl	1/2	1/8	1/2	1/8	5/8	1/8	3/4	1/8	7/8	1/8
1 to 1 1/4, incl	5/8	1/8	5/8	1/8	3/4	1/8	7/8	1/8	1	1/8
Abrasive-cut:[E,F]										
3/16 to 1 1/4, incl	1/8	1/8	1/8	1/8	1/8	1/8	1/8	1/8	1/8	1/8
Over 1 1/4 to 2 3/4, incl	3/16	1/8	3/16	1/8	3/16	1/8	3/16	1/8	3/16	1/8
Plasma-torch-cut:[G]										
3/16 to 2, excl	1/2	0	1/2	0	1/2	0	1/2	0	1/2	0
2 to 3, incl	5/8	0	5/8	0	5/8	0	5/8	0	5/8	0
Millimetres										
Sheared:[D]										
4.8 to 7.9, excl	4.8	3.2	6.4	3.2	9.5	3.2	12.7	3.2	...	...
7.9 to 12.7, excl	6.4	3.2	9.5	3.2	9.5	3.2	12.7	3.2	15.9	3.2
12.7 to 19.0, excl	9.5	3.2	9.5	3.2	12.7	3.2	15.9	3.2	19.0	3.2
19.0 to 25.4, excl	12.7	3.2	12.7	3.2	15.9	3.2	19.0	3.2	22.2	3.2
25.4 to 31.8, incl	15.9	3.2	15.9	3.2	19.0	3.2	22.2	3.2	25.4	3.2
Abrasive-cut:[E,F]										
4.8 to 31.8, incl	3.2	3.2	3.2	3.2	3.2	3.2	3.2	3.2	3.2	3.2
Over 31.8 to 69.8, incl	4.8	3.2	4.8	3.2	4.8	3.2	4.8	3.2	4.8	3.2
Plasma-torch-cut:[G]										
4.8 to 50.8, excl	12.7	0	12.7	0	12.7	0	12.7	0	12.7	0
50.8 to 76.2, incl	15.9	0	15.9	0	15.9	0	15.9	0	15.9	0

[A] Permissible variations in width for powder-cut or inert-arc-cut plate shall be as agreed upon between the manufacturer and the purchaser.

[B] Permissible variations in machined, powder-cut, or inert-arc-cut circular plate shall be as agreed upon between the manufacturer and the purchaser.

[C] Permissible variations in plasma-torch-cut sketch plates shall be as agreed upon between the manufacturer and the purchaser.

[D] The minimum sheared width is 10 in. (254 mm) for material 3/4 in. (19.0 mm) and under in thickness and 20 in. (508 mm) for material over 3/4 in. (19.0 mm) in thickness.

[E] The minimum abrasive-cut width is 2 in. (50.8 mm) and increases to 4 in. (101.6 mm) for thicker plates.

[F] These tolerances are applicable to lengths of 240 in. (6100 mm), max. For lengths over 240 in. (6100 mm), an additional 1/16 in. (1.6 mm) is permitted, both plus and minus.

[G] The tolerance spread shown for plasma-torch-cutting may be obtained all on the minus side, or divided between the plus and minus side if so specified by the purchaser.

TABLE 9
PERMISSIBLE VARIATIONS IN DIAMETER FOR CIRCULAR PLATES

Sheared Plate		
	Permissible Variations Over Specified Diameter for Thickness Given in in. (mm)[A]	
Specified Diameter, in. (mm)	To 3/8 (9.5), incl	
20 to 32 (508 to 813), excl	1/4 (6.4)	
32 to 84 (813 to 2130), excl	5/16 (7.9)	
84 to 108 (2130 to 2740), excl	3/8 (9.5)	
108 to 140 (2740 to 3580), incl	7/16 (11.1)	

Plasma-Torch-Cut Plate[B]					
		Permissible Variations in Specified Diameter for Thickness Given in in. (mm)[C]			
	Thickness max, in. (mm)	3/16 to 2 (4.76 to 50.8), excl		2 to 3 (50.8 to 76.2), incl	
Specified Diameter, in. (mm)		+	−	+	−
19 to 20 (483 to 508), excl	3 (76.2)	1/2 (12.7)	0	5/8 (15.9)	0
20 to 22 (508 to 559), excl	2 3/4 (69.8)	1/2 (12.7)	0	5/8 (15.9)	0
22 to 24 (559 to 610), excl	2 1/2 (63.5)	1/2 (12.7)	0	5/8 (15.9)	0
24 to 28 (610 to 711), excl	2 1/4 (57.3)	1/2 (12.7)	0	5/8 (15.9)	0
28 to 32 (711 to 812), excl	2 (50.8)	1/2 (12.7)	0	5/8 (15.9)	0
32 to 34 (812 to 864), excl	1 3/4 (44.5)	1/2 (12.7)	0	...	...
34 to 38 (864 to 965), excl	1 1/2 (38.1)	1/2 (12.7)	0	...	...
38 to 40 (965 to 1020), excl	1 1/4 (31.8)	1/2 (12.7)	0	...	...
40 to 140 (1020 to 3560), incl	3 (76.2)	1/2 (12.7)	0	5/8 (15.9)	0

[A] No permissible variations under.
[B] Permissible variations in plasma-torch-cut sketch plates shall be as agreed upon between the manufacturer and the purchaser.
[C] The tolerance spread shown may also be obtained all on the minus side or divided between the plus and minus sides if so specified by the purchaser.

7.3 *Length:*

7.3.1 Sheet and strip of all sizes may be ordered to cut lengths, in which case a variation of 1/8 in. (3.2 mm) over the specified length shall be permitted.

7.3.2 Permissible variations in length of rectangular plate shall be as prescribed in Table 11.

7.4 *Straightness:*

7.4.1 The edgewise curvature (depth of chord) of flat sheet, strip, and plate shall not exceed 0.05 in. multiplied by the length in feet (0.04 mm multiplied by the length in centimetres).

7.4.2 Straightness for coiled material is subject to agreement between the manufacturer and the purchaser.

7.5 *Edges:*

7.5.1 When finished edges of strip are specified in the contract or order, the following descriptions shall apply:

7.5.1.1 Square-edge strip shall be supplied with finished edges, with sharp, square corners, and without bevel or rounding.

7.5.1.2 Round-edge strip shall be supplied with finished edges, semicircular in form, and the diameter of the circle forming the edge being equal to the strip thickness.

7.5.1.3 When no description of any required form of strip edge is given, it shall be understood that edges such as those resulting from slitting or shearing will be acceptable.

7.5.1.4 Sheet shall have sheared or slit edges.

7.5.1.5 Plate shall have sheared or cut (machined, abrasive-cut, powder-cut, or inert-arc-cut) edges, as specified.

7.6 *Squareness (Sheet)* — For sheets of all thicknesses, the angle between adjacent sides shall be 90° ±0.15° (1/16 in. in 24 in.) (1.6 mm in 610 mm).

7.7 *Flatness:*

7.7.1 There shall be no flatness requirements for "deep drawing quality," "spinning quality," or "as rolled," sheet and strip (see X1.4).

7.7.2 Standard flatness tolerances for plate shall conform to the requirements prescribed in Table 12. "Specially flattened" plate, when so specified, shall have permissible variations in flatness as agreed upon between the manufacturer and the purchaser.

TABLE 10
PERMISSIBLE VARIATIONS IN WIDTH OF SHEET AND STRIP

Specified Thickness, in. (mm)	Specified Width, in. (mm)	Permissible Variations in Specified Width, in. (mm)	
		+	−
	Sheet		
Up to 0.250 (6.4)	all	0.125 (3.2)	0
	Strip[A]		
Under 0.075 (1.9)	up to 12 (305), incl	0.007 (0.18)	0.007 (0.18)
	over 12 to 48 (305 to 1219), incl	0.062 (1.6)	0
0.075 to 0.100 (1.9 to 2.5), incl	up to 12 (305), incl	0.009 (0.23)	0.009 (0.23)
	over 12 to 48 (305 to 1219), incl	0.062 (1.6)	0
Over 0.100 to 0.125 (2.5 to 3.2), incl	up to 12 (305), incl	0.012 (0.30)	0.012 (0.30)
	over 12 to 48 (305 to 1219), incl	0.062 (1.6)	0
Over 0.125 to 0.160 (3.2 to 4.1), incl	up to 12 (305), incl	0.016 (0.41)	0.016 (0.41)
	over 12 to 48 (305 to 1219), incl	0.062 (1.6)	0
Over 0.160 to 0.187 (4.1 to 4.7), incl	up to 12 (305), incl	0.020 (0.51)	0.020 (0.51)
	over 12 to 48 (305 to 1219), incl	0.062 (1.6)	0
Over 0.187 to 0.250 (4.7 to 6.4), incl	up to 12 (305), incl	0.062 (1.6)	0.062 (1.6)
	over 12 to 48 (305 to 1219), incl	0.062 (1.6)	0.062 (1.6)

[A] Rolled-round or square-edge strip in thicknesses of 0.071 to 0.125 in. (1.8 to 3.2 mm), inclusive, in widths 3 in. (76.2 mm) and under, shall have permissible width variations of ±0.005 in. (±0.130 mm). Permissible variations for other sizes shall be as agreed upon between the manufacturer and the purchaser.

TABLE 11
PERMISSIBLE VARIATIONS IN LENGTH[A] OF SHEARED, PLASMA TORCH-CUT,[B] AND ABRASIVE-CUT RECTANGULAR PLATE[C]

	Permissible Variation in Length for Lengths Given, in. (mm)															
	Up to 60 (1520), incl		Over 60 to 96 (1520 to 2440), incl		Over 96 to 120 (2440 to 3050), incl		Over 120 to 240 (3050 to 6096), incl		Over 240 to 360 (6096 to 9144), incl		Over 360 to 450 (9144 to 11 430), incl		Over 450 to 540 (11 430 to 13 716), incl		Over 540 (13 716)	
Specified Thickness	+	−	+	−	+	−	+	−	+	−	+	−	+	−	+	−
Inches																
Sheared:[D]																
3/16 to 5/16, excl	3/16	1/8	1/4	1/8	3/8	1/8	1/2	1/8	5/8	1/8	3/4	1/8	7/8	1/8	...	...
5/16 to 1/2, excl	3/8	1/8	1/2	1/8	1/2	1/8	1/2	1/8	5/8	1/8	3/4	1/8	7/8	1/8	1	1/8
1/2 to 3/4, excl	1/2	1/8	1/2	1/8	5/8	1/8	5/8	1/8	3/4	1/8	7/8	1/8	1 1/8	1/8	1 3/8	1/8
3/4 to 1, excl	5/8	1/8	5/8	1/8	5/8	1/8	3/4	1/8	7/8	1/8	1 1/8	1/8	1 3/8	1/8	1 5/8	1/8
1 to 1 1/4, incl	3/4	1/8	3/4	1/8	3/4	1/8	7/8	1/8	1 1/8	1/8	1 3/8	1/8	1 5/8	1/8	...	...
Abrasive-cut:[E]																
3/16 to 1 1/4, incl	1/8	1/8	1/8	1/8	1/8	1/8	1/8	1/8	1/8	1/8	1/8	1/8	...	...	...	...
Over 1 1/4 to 2 3/4, incl	3/16	1/8	3/16	1/8	3/16	1/8	3/16	1/8	3/16	1/8	3/16	1/8	...	...	...	...
Plasma-torch-cut:[F]																
3/16 to 2, excl	1/2	0	1/2	0	1/2	0	1/2	0	1/2	0	1/2	0	1/2	0	1/2	0
2 to 3, incl	5/8	0	5/8	0	5/8	0	5/8	0	5/8	0	5/8	0	5/8	0	5/8	0
Millimetres																
Sheared:[D]																
4.8 to 7.9, excl	4.8	3.2	6.4	3.2	9.5	3.2	12.7	3.2	15.9	3.2	19.0	3.2	22.2	3.2	...	...
7.9 to 12.7, excl	9.5	3.2	12.7	3.2	12.7	3.2	12.7	3.2	15.9	3.2	19.0	3.2	22.2	3.2	25.4	3.2
12.7 to 19.0, excl	12.7	3.2	12.7	3.2	15.9	3.2	15.9	3.2	19.0	3.2	22.2	3.2	28.6	3.2	34.9	3.2
19.0 to 25.4, excl	15.9	3.2	15.9	3.2	15.9	3.2	19.0	3.2	22.2	3.2	28.6	3.2	34.9	3.2	41.2	3.2
25.4 to 31.8, incl	19.0	3.2	19.0	3.2	19.0	3.2	22.2	3.2	28.6	3.2	34.9	3.2	41.2	3.2	...	...
Abrasive-cut:[E]																
4.8 to 31.8, incl	3.2	3.2	3.2	3.2	3.2	3.2	3.2	3.2	3.2	3.2	3.2	3.2	...	...	...	...
Over 31.8 to 69.9, incl	4.8	3.2	4.8	3.2	4.8	3.2	4.8	3.2	4.8	3.2	4.8	3.2	...	...	...	...
Plasma-torch-cut:[F]																
4.8 to 50.8, excl	12.7	0	12.7	0	12.7	0	12.7	0	12.7	0	12.7	0	12.7	0	12.7	0
50.8 to 76.2, incl	15.9	0	15.9	0	15.9	0	15.9	0	15.9	0	15.9	0	15.9	0	15.9	0

[A] Permissible variations in length for powder-cut or inert-arc-cut plate shall be as agreed upon between the manufacturer and the purchaser.

[B] The tolerance spread shown for plasma-torch-cutting may be obtained all on the minus side, or divided between the plus and minus sides if so specified by the purchaser.

[C] Permissible variations in machined, powder-cut or inert-arc-cut circular plate shall be as agreed upon between the manufacturer and the purchaser.

[D] The minimum sheared length is 10 in. (254 mm).

[E] Abrasive cut applicable to a maximum length of 144 to 400 in. (3658 to 10 160 mm) depending on the thickness and width ordered.

[F] The tolerance spread shown for plasma-torch-cut sketch plates shall be as agreed upon between the manufacturer and the purchaser.

TABLE 12
PERMISSIBLE VARIATIONS FROM FLATNESS OF RECTANGULAR, CIRCULAR, AND SKETCH PLATES

Specified Thickness	Permissible Variations from a Flat Surface for Thickness and Widths Given in in. (mm)								
	To 48 (1220), excl	48 to 60 (1220 to 1520), excl	60 to 72 (1520 to 1830), excl	72 to 84 (1830 to 2130), excl	84 to 96 (2130 to 2440), excl	96 to 108 (2440 to 2740), excl	108 to 120 (2740 to 3050), excl	120 to 144 (3050 to 3660), excl	144 (3660), and over
				Inches					
3/16 to 1/4, excl	3/4	1 1/16	1 1/4	1 3/8	1 5/8	1 5/8	...	...	...
1/4 to 3/8, excl	11/16	3/4	15/16	1 1/8	1 3/8	1 7/16	1 9/16	1 7/8	...
3/8 to 1/2, excl	1/2	9/16	11/16	3/4	15/16	1 1/8	1 1/4	1 7/16	1 3/4
1/2 to 3/4, excl	1/2	9/16	5/8	5/8	13/16	1 1/8	1 1/8	1 1/8	1 3/8
3/4 to 1, excl	1/2	9/16	5/8	5/8	3/4	13/16	15/16	1	1 1/8
1 to 2, excl	1/2	9/16	9/16	9/16	11/16	11/16	11/16	3/4	1
2 to 4, incl	1/4	5/16	3/8	7/16	1/2	9/16	5/8	3/4	7/8
				Millimetres					
4.8 to 6.4, excl	19.0	27.0	31.7	34.9	41.3	41.3	...	...	...
6.4 to 9.5, excl	17.5	19.0	23.8	28.6	35.0	36.5	39.7	47.6	...
9.5 to 12.7, excl	12.7	14.3	17.5	19.0	23.8	28.6	31.7	35.0	44.4
12.7 to 19.0, excl	12.7	14.3	15.9	15.9	20.6	28.6	28.6	28.6	34.9
19.0 to 25.4, excl	12.7	14.3	15.9	15.9	19.0	20.6	23.8	25.4	28.6
25.4 to 50.8, excl	12.7	14.3	14.3	14.3	17.5	17.5	17.5	19.0	25.4
50.8 to 101.6, incl	6.4	7.9	9.5	11.1	12.7	14.3	15.9	19.0	22.2

NOTE 1 — Permissible variations apply to plates up to 12 ft (3.66 m) in length, or to any 12 ft of longer plates.
NOTE 2 — If the longer dimension is under 36 in. (914 mm), the permissible variation is not greater than 1/4 in. (6.4 mm).
NOTE 3 — The shorter dimension specified is considered the width, and the permissible variation in flatness across the width does not exceed the tabular amount of that dimension.
NOTE 4 — The maximum deviation from a flat surface does not customarily exceed the tabular tolerance for the longer dimension specified.

8. Workmanship, Finish, and Appearance

8.1 The material shall be uniform in quality and temper, smooth, commercially straight or flat, and free of injurious imperfections.

8.2 *Sheet, Strip, and Plate* — Sheet, strip, and plate supplied in the conditions and finishes as listed in the appendix may be ground or machined to remove surface imperfections, provided such removal does not reduce the material below the minimum specified dimensions. Surface eliminated depressions shall be faired smoothly into the surrounding material. The removal of a surface imperfection shall be verified by the method originally used to detect the imperfection.

9. Sampling

9.1 *Lot* — Definition:

9.1.1 A lot for chemical analysis shall consist of one heat.

9.1.2 A lot for mechanical properties, hardness, and grain size testing shall consist of all material from the same heat, nominal thickness, and condition.

9.1.2.1 Where material cannot be identified by heat, a lot shall consist of not more than 500 lb (227 kg) of material in the same thickness and condition, except for plates weighing over 500 lb, in which case only one specimen shall be taken.

9.2 *Test Material Selection:*

9.2.1 *Chemical Analysis* — Representative samples shall be taken during pouring or subsequent processing.

9.2.1.1 Product (check) analysis shall be wholly the responsibility of the purchaser.

9.2.2 *Mechanical Properties, Hardness, and Grain Size* — Samples of the material to provide test specimens for mechanical properties, hardness, and grain size shall be taken from such locations in each lot as to be representative of that lot. (Hardness and grain size required only on the products as specified in Tables 3 and 4.)

10. Number of Tests

10.1 *Chemical Analysis* — One test per lot.

10.2 *Mechanical Properties* — One test per lot.

10.3 *Hardness* — One test per lot. (Required only as specified in Table 3 and Table 4.)

10.4 *Grain Size* — One test per lot. (Required only as specified in Table 4.)

11. Specimen Preparation

11.1 Tension test specimens shall be taken from material in the final condition (temper) and tested transverse to the direction of rolling when width will permit.

11.2 Tension test specimens shall be any of the standard or subsize specimens shown in Test Methods E 8.

11.3 In the event of disagreement, referee specimens shall be as follows:

11.3.1 Full thickness of the material, machined to the form and dimensions shown for the sheet-type specimen in Test Methods E 8 for material under $\frac{1}{2}$ in. (12.7 mm) in thickness.

11.3.2 The largest possible round specimen shown in Test Methods E 8 for material $\frac{1}{2}$ in. (12.7 mm) and over.

12. Test Methods

12.1 Determine the chemical composition, mechanical, and other properties of the material as enumerated in this specification, in case of disagreement, in accordance with the following methods:

Test	ASTM Designation
Chemical analysis	E 39
Tension	E 8
Brinell hardness	E 10
Rockwell hardness	E 18
Hardness conversion	E 140
Grain size	E 112
Rounding procedure	E 29
Spring-back	F 155

12.2 The measurement of the average grain size may be carried out by the planimetric method, the comparison method, or the intercept method described in Test Methods E 112. In case of dispute, the "referee" method for determining the average grain size shall be the planimetric method.

12.3 For purposes of determining compliance with the specified limits for requirements of the properties listed in the following table, an observed value or a calcu-

lated value shall be rounded as indicated, in accordance with the rounding method of Practice E 29.

Test	Rounded Unit for Observed Or Calculated Value
Chemical composition, hardness, and tolerances (when expressed in decimals)	nearest unit in the last right hand place of figures of the specified limit. If two choices are possible, as when the digits dropped are exactly a 5, or a 5 followed only by zeros, choose the one ending in an even digit, with zero defined as an even digit.
Tensile strength and yield strength	nearest 1000 psi (6.9 MPa)
Elongation	nearest 1%
Grain Size:	
0.0024 in. (0.060 mm) or larger	nearest multiple of 0.0002 in. (0.005 mm)
less than 0.0024 in. (0.060 mm)	nearest multiple of 0.0001 in. (0.002 mm)

13. Inspection

13.1 Inspection of the material shall be as agreed upon between the purchaser and the supplier as part of the purchase contract.

14. Rejection and Rehearing

14.1 Material that fails to conform to the requirements of this specification may be rejected. Rejection should be reported to the producer or supplier promptly and in writing. In case of dissatisfaction with the results of the test, the producer or supplier may make claim for a rehearing.

15. Certification

15.1 A manufacturer's certification shall be furnished to the purchaser stating that material has been manufactured, tested, and inspected in accordance with this specification, and that the test results on representative samples meet specification requirements. A report of the test results shall be furnished.

16. Product Marking

16.1 Each plate, sheet, or strip shall be marked on one face with the specification number, alloy, condition (temper), heat number, manufacturer's identification, and size. The markings shall not have a deleterious effect on the material or its performance and shall be sufficiently stable to withstand normal handling.

16.2 When applicable, each bundle or shipping container shall be marked with the name of the material, condition (temper), this specification number, alloy, size, consignor and consignee address, contract or order number, and such other information as may be defined in the contract or order.

APPENDIX

(Nonmandatory Information)

X1. CONDITIONS AND FINISHES

X1.1 Scope

X1.1.1 This appendix lists the conditions and finishes in which plate, sheet, and strip are normally supplied. These are subject to change, and the manufacturer should be consulted for the latest information available.

X1.2 Plate, Hot-Rolled

X1.2.1 *Annealed* — Soft with an oxide surface, and suitable for heavy cold forming. Available with a descaled surface, when so specified.

X1.2.2 *As-Rolled* — With an oxide surface. Available with a descaled surface, when so specified. Suitable for flat work, mild forming or tube sheets. When intended for tube sheets, specify that plates are to be specially flattened. When intended for hot forming, this should be indicated on the purchase order so that the manufacturer may select appropriate material.

X1.3 Plate, Cold-Rolled

X1.3.1 *Annealed* — Soft with an oxide surface; available with a descaled surface when so specified.

X1.4 Sheet, Hot-Rolled

X1.4.1 *Annealed and Pickled* — Soft with a pickled matte finish. Properties similar to X1.5.1 but with broader thickness tolerances. Not suggested for applications where the finish of a cold-rolled sheet is considered essential or for deep drawing or spinning.

X1.5 Sheet and Strip, Cold-Rolled

X1.5.1 *Annealed* — Soft with a pickled or bright annealed finish.

X1.5.2 *Deep-Drawing or Spinning Quality* — Similar to X1.5.1, except furnished to controlled hardness and grain size and lightly leveled.

X1.5.3 *Skin Hard* — Similar to X1.5.1, but given a light cold reduction to hardness range shown in Table 3.

X1.5.4 *Quarter-Hard* — Cold rolled to the hardness range indicated in Table 3, bright finish. Out-of-flatness must be expected and will vary with temper and thickness.

X1.5.5 *Half-Hard* — Cold rolled to the hardness range indicated in Table 3, bright finish. Out-of-flatness must be expected and will vary with temper and thickness.

X1.5.6 *Three-Quarter Hard* — Cold rolled to the hardness range indicated in Table 3, bright finish. Out-of-flatness must be expected and will vary with temper and thickness.

X1.5.7 *Hard* — Cold rolled to the tensile requirements indicated in Table 3, bright finish. Out-of-flatness must be expected and will vary with temper and thickness.

X1.5.8 *Spring Temper* — Cold rolled to the minimum hardness indicated in Table 3, bright finish. Out-of-flatness must be expected and will vary with temper and thickness.

SPECIFICATION FOR SEAMLESS NICKEL AND NICKEL ALLOY CONDENSER AND HEAT-EXCHANGER TUBES

SB-163

(Identical with ASTM Specification B 163-01 except for revisions to the flaring test requirements in paras. 6.3 and 10.5 and a revision to para. 9.1.2. Certification has been made mandatory and the Supplementary Requirements for U.S. government and Appendix X2 have been deleted.)

1. Scope

1.1 This specification covers seamless tubes of nickel and nickel alloys, as shown in Table 1, for use in condenser and heat-exchanger service.

1.2 This specification covers outside diameter and average wall, or outside diameter and minimum wall tube.

1.2.1 The sizes covered by this specification are 3 in. (76.2 mm) and under in outside diameter with minimum wall thicknesses of 0.148 in. (3.76 mm) and under, and with average wall thicknesses of 0.165 in. (4.19 mm) and under.

1.3 Tube shall be furnished in the alloys and conditions as shown in Table 2.

1.4 The values stated in inch-pound units are to be regarded as the standard. The values given in parentheses are for information only.

1.5 The following safety hazards caveat pertains only to the test method portion, Section 12, of this specification. *This standard does not purport to address all of the safety concerns, if any, associated with its use. It is the responsibility of the user of this standard to establish appropriate safety and health practices and determine the applicability of regulatory limitations prior to use.*

2. Referenced Documents

2.1 *ASTM Standards:*

B 880 Specification for General Requirements for Chemical Check Analysis Limits for Nickel, Nickel Alloys, and Cobalt Alloys

E 8 Test Methods for Tension Testing of Metallic Materials

E 18 Test Methods for Rockwell Hardness and Rockwell Superficial Hardness of Metallic Materials

E 29 Practice for Using Significant Digits in Test Data to Determine Conformance With Specifications

E 76 Test Methods for Chemical Analysis of Nickel-Copper Alloys

E 112 Test Methods for Determining the Average Grain Size

E 140 Hardness Conversion Tables for Metals

E 1473 Test Methods for Chemical Analysis of Nickel, Cobalt, and High-Temperature Alloys

3. Terminology

3.1 *Definitions:*

3.1.1 *average diameter* — average of the maximum and minimum outside diameters, as determined at any one cross section of the tube.

3.1.2 *tube* — hollow product of round or any other cross section having a continuous periphery.

4. Ordering Information

4.1 It is the responsibility of the purchaser to specify all requirements that are necessary for the safe and satisfactory performance of material ordered under this specification. Examples of such requirements include but are not limited to the following:

4.1.1 Alloy (Table 1).

4.1.2 Condition (Temper) Table 3 and Appendix X1.

TABLE 1
CHEMICAL REQUIREMENTS

Alloy	Composition, %																			
	Nickel	Copper	Molybdenum	Iron	Manganese, Max	Carbon[A]	Silicon[A]	Sulfur, Max	Chromium	Aluminum	Titanium	Phosphorus	Cerium	Zirconium	Yttrium	Boron	Cobalt	Columbium (Nb)	Tungsten	Nitrogen
Nickel UNS N02200	99.0 min.[B]	0.25 max	...	0.40 max	0.35	0.15 max	0.35	0.01	...	...	...	...	...	...	...	...	...	...	...	
Low-Carbon Nickel UNS N02201	99.0 min.[B]	0.25 max	...	0.40 max	0.35	0.02 max	0.35	0.01	...	...	...	...	...	...	...	...	...	...	...	
Nickel-Copper Alloy UNS N04400	63.0 min.[B]	28.0 to 34.0	...	2.5 max	2.0	0.3 max	0.5	0.024	...	...	...	...	...	...	...	...	...	...	...	
Nickel-Chromium-Iron Alloy UNS N06600	72.0 min.[B]	0.5 max	...	6.0 to 10.0	1.0	0.15 max	0.5	0.015	14.0 to 17.0	...	...	...	...	...	...	...	...	...	...	...
Nickel-Chromium-Iron Alloy UNS N06601	58.0 to 63.0	1.0 max	...	remainder[A]	1.0	0.10	0.5	0.015	21.0 to 25.0	1.0 to 1.7	...	...	...	...	...	...	...	...	...	
Nickel-Chromium-Iron Alloy UNS N06690	58.0 min.[B]	0.5 max	...	7.0 to 11.0	0.5	0.05 max	0.5	0.015	27.0 to 31.0	...	...	...	...	...	...	...	...	...	...	
Nickel-Chromium-Iron Alloy UNS N06025	Balance[B]	0.1 max	...	8.0 to 11.0	0.15	0.15 to 0.25	0.5	0.010	24.0 to 26.0	1.8 to 2.4	0.1 to 0.2	0.020 max	...	0.01 to 0.10	0.05 to 0.12	...	...	...	...	...
Alloy UNS N06045	45.0 min.	0.3 max	...	21.0 to 25.0	1.0	0.05 to 0.12	2.5 to 3.0	0.010	26.0 to 29.0	...	...	0.020 max	0.03 to 0.09	...	...	...	...	...	...	...
Nickel-chromium-iron-aluminum alloy UNS N06603	Balance[B]	0.5 max	...	8.0 to 11.0	15.0	0.20 to 0.40	0.5 max	0.010	24.0 to 26.0	2.4 to 3.0	0.01 to 0.25	0.020 max	...	0.01 to 0.10	0.01 to 0.15	...	...	...	...	...
Low-carbon nickel-chromium-molybbdenum tungsten alloy UNS N06686	Balance[B]	...	15.0 to 17.0	5.0 max	0.75	0.010	0.08	0.02	19.0 to 23.0	...	0.02 to 0.25	0.04	...	...	...	...	...	...	3.0 to 4.4	...
Nickel-iron-chromium alloy UNS N08120	35.0 to 39.0	0.50 max	2.50 max	remainder[B]	1.5 max	0.02 to 0.10	1.0 max	0.03 max	23.0 to 27.0	0.40 max	0.20 max	0.04 max	...	...	...	0.010 max	3.0 max	0.4 to 0.9	2.50 max	0.15 to 0.30
Nickel-Iron-Chromium Alloy UNS N08800	30.0 to 35.0	0.75 max	...	39.5 min.[B]	1.5	0.10 max	1.0	0.015	19.0 to 23.0	0.15 to 0.60	0.15 to 0.60	...	...	...	...	...	...	...	...	
Nickel-Iron-Chromium Alloy UNS N08810	30.0 to 35.0	0.75 max	...	39.5 min.[B]	1.5	0.05 to 0.10	1.0	0.015	19.0 to 23.0	0.15 to 0.60	0.15 to 0.60	...	...	...	...	...	...	...	...	
Nickel-Iron-Chromium Alloy UNS N08811	30.0 to 35.0	0.75 max	...	39.5 min.[B]	1.5	0.06 to 0.10	1.0	0.015	19.0 to 23.0	0.15 to 0.60[C]	0.15 to 0.60[C]	...	...	...	...	...	...	...	...	
Nickel-Iron-Chromium Alloy UNS N08801	30.0 to 34.0	0.50 max	...	39.5 min.[B]	1.50	0.10 max	1.00	0.015	19.0 to 22.0	...	0.75 to 1.5	...	...	...	...	...	...	...	...	
Nickel-Iron-Chromium-Molybdenum-Copper Alloy UNS N08825	38.0 to 46.0	1.5 to 3.0	2.5 to 3.5	22.0 min.[B]	1.0	0.05 max	0.5	0.03	19.5 to 23.5	0.2 max	0.6 to 1.2	...	...	...	...	...	...	...	...	

[A] Maximum unless range is given.
[B] Element shall be determined arithmetically by difference.
[C] Alloy UNS N08811: Al + Ti, 0.85 – 1.20.

TABLE 2
ALLOY AND CONDITIONS

Alloy	Condition
Nickel UNS N02200 and Low-Carbon Nickel UNS N02201	Annealed or stress-relieved
Nickel-Copper Alloy UNS N04400	Annealed or stress-relieved
Nickel-Chromium-Iron-Aluminum Alloy UNS N06603	Annealed
Nickel-Chromium-Iron-Aluminum Alloy UNS N06601	Annealed
Nickel-Chromium-Iron Alloy UNS N06600	Annealed
Low-Carbon Nickel-Chromium-Molybdenum-Tungsten Alloy UNS N06686	Solution annealed
Nickel-Chromium-Iron Alloy UNS N06690	Annealed
Nickel-Chromium-Iron Alloy UNS N06045	Annealed
Nickel-Iron-Chromium Alloy UNS N08120[A]	Annealed or cold-worked
Nickel-Iron-Chromium Alloy UNS N08800[A]	Annealed or cold-worked
Nickel-Iron-Chromium Alloy UNS N08810[A]	Annealed
Nickel-Iron-Chromium Alloy UNS N08811[A]	Annealed
Nickel-Iron-Chromium Alloy UNS N08801	Annealed
Nickel-Iron-Chromium-Molybdenum-Copper Alloy UNS N08825	Annealed
Nickel-Chromium-Iron Alloy UNS N06025	Annealed

[A] Alloy UNS N08800 is normally employed in service temperatures up to and including 1,100°F (593°C). Alloys UNS N08810, UNS N08811, and UNS N08120 are normally employed in service temperatures above 1,100°F (539°C) where resistance to creep and rupture is required, and it is annealed to develop controlled grain size for optimum properties in this temperature range.

4.1.2.1 If annealed ends for stress relieved tubing are desired, state length of end to be annealed and whether or not one end or both ends are to be annealed.

4.1.3 Finish.

4.1.4 Dimensions — Outside diameter, minimum or average wall thickness (in inches, not gage number), and length.

4.1.5 Fabrication Operations:

4.1.5.1 Cold Bending or Coiling.

4.1.5.2 Packing.

4.1.5.3 Rolling or Expanding into Tube Sheets.

4.1.5.4 Welding or Brazing — Process to be employed.

4.1.5.5 Pressure Requirements — If other than required by 6.5.

4.1.5.6 Ends — Plain ends cut and deburred will be furnished.

4.1.6 Supplementary Requirements — State nature and details.

4.1.7 Certification — Certification is required (Section 15).

4.1.8 Samples for Product (Check) Analysis — Whether samples for product (check) analysis shall be furnished.

4.1.9 Purchaser Inspection — If purchaser wishes to witness tests or inspection of material at place of manufacture, the purchase order must so state indicating which tests or inspections are to be witnessed (Section 13).

5. Chemical Composition

5.1 The material shall conform to the composition limits specified in Table 1.

5.2 If a product (check) analysis is performed by the purchaser, the material shall conform to the product (check) analysis per Specification B 880.

6. Mechanical Properties and Other Requirements

6.1 *Mechanical Properties* — The material shall conform to the mechanical properties specified in Table 3.

6.2 *Hardness* — When annealed ends are specified for tubing in the stress-relieved condition (see Table 3), the hardness of the ends after annealing shall not exceed the values specified in Table 3.

6.3 *Flare* — A flare test shall be made on one end of 1% of finished tube from each lot after final heat treatment. In the case of stress relieved tubing with annealed ends, the test shall be made prior to, or subsequent to, annealing of the ends at the option of the manufacturer.

TABLE 3
MECHANICAL PROPERTIES OF TUBES

Material and Condition	Tensile Strength, Min., ksi (MPa)	Yield Strength (0.2% Offset), Min., psi (MPa)	Elongation in 2 in. or 50 mm (or 4 *D*) min., %	Rockwell Hardness (or Equivalent) for Annealed Ends[A]
Nickel UNS N02200:				
Annealed	55 (379)	15 (103)	40	....
Stress-relieved	65 (448)	40 (276)	15	B 65 max
Low-Carbon Nickel UNS N02201:				
Annealed	50 (345)	12 (83)	40	....
Stress-relieved	60 (414)	30 (207)	15	B 62 max
Nickel-Copper Alloy UNS N04400				
Annealed	70 (483)	28 (193)	35	....
Stress-relieved	85 (586)	55 (379)	15	B 75 max
Nickel-Chromium-Iron Alloys:				
Annealed Alloy UNS N06600	80 (552)	35 (241)	30	....
Annealed Alloy UNS N06601	80 (552)	30 (207)	30	....
Annealed Alloy UNS N06690	85 (586)	35 (241)	30	....
Annealed Alloy UNS N06045	90 (620)	35 (241)	35	....
Annealed Alloy UNS N06025	98 (680)	39 (270)	30	....
Annealed Alloy UNS N06603	94 (650)	43 (300)	25	....
Low-Carbon Nickel-Chromium-Molybdenum-Tungsten Alloy:				
Solution annealed UNS N06686	100 (690)	45 (310)	45	...
Nickel-Iron-Chromium Alloys:				
Annealed Alloy UNS N08120	90 (620)	40 (276)	30	....
Annealed Alloy UNS N08800	75 (517)	30 (207)	30	....
Annealed Alloy UNS N08801	65 (448)	25 (172)	30	....
Cold-worked Alloy UNS N08800	83 (572)	47 (324)	30	....
Annealed Alloy UNS N08810	65 (448)	25 (172)	30	....
Annealed Alloy UNS N08811	65 (448)	25 (172)	30	....
Nickel-Iron-Chromium-Molybdenum-Copper Alloy:				
Annealed UNS N08825	85 (586)	35 (241)	30	....

[A] Rockwell or equivalent hardness values apply only to the annealed ends of stress-relieved tubing. Caution should be observed in using the Rockwell test on thin material, as the results may be affected by the thickness of specimen. For thickness under 0.050 in. (1.27 mm) the use of the Rockwell superficial or the Vickers hardness test is suggested. For hardness conversions for nickel and high-nickel alloys, see Hardness Conversion Tables E 140.

6.3.1 The flare test shall consist of flaring a test specimen with an expanding tool having an included angle of 60° until the specified outside diameter has been increased by 30%. The flared specimen shall not exhibit cracking through the wall.

6.4 *Grain Size* — A transverse sample representing full-wall thickness of annealed alloys UNS N08120, UNS N08810, and UNS N08811 shall conform to an average grain size of ASTM No. 5 or coarser.

6.5 *Hydrostatic Test:*

6.5.1 Each tube with an outside diameter $\frac{1}{8}$ in. (3.2 mm) and larger and tubes with wall thickness of 0.015 in. (0.38 mm) and over shall be tested by the manufacturer to an internal hydrostatic pressure of 1,000 psi (6.9 MPa) provided that the fiber stress calculated in accordance with the following equation does not exceed the allowable fiber stress, *S*, indicated below. The tube shall show no evidence of leakage.

$$P = 2St/D$$

where:

P = hydrostatic test pressure, psi (MPa),
S = allowable fiber stress for material in the condition furnished, as follows:
t = minimum wall thickness, in. (mm); equal to the specified average wall minus the permissible "minus" wall tolerance, Table 4, or the specified minimum wall thickness, and
D = outside diameter of the tube, in. (mm).

6.5.2 When so agreed upon between the manufacturer and the purchaser, tube may be tested to $1\frac{1}{2}$ times the above allowable fiber stress.

TABLE 4
PERMISSIBLE VARIATIONS IN OUTSIDE DIAMETER AND WALL THICKNESS OF CONDENSER AND HEAT EXCHANGER TUBES

		Permissible Variations[A]					
				Wall Thickness, %			
		Outside Diameter, in (mm)		Average Wall		Minimum Wall	
Material	Nominal Outside Diameter, in. (mm)	+	−	+	−	+	−
UNS N02200, UNS N02201, and UNS N04400	½ to ⅝ (12.7 to 15.9), excl	0.005 (0.13)	0	12.5	12.5	25.0	0
	⅝ to 1½ (15.9 to 38.1), incl	0.005 (0.13)	0.005 (0.13)	10.0	10.0	20.0	0
	Over 1½ to 3 (38.1 to 76.2), incl	0.010 (0.25)	0.010 (0.25)	10.0	10.0	22.0	0
UNS N06600, UNS N06601, UNS N06690, UNS N06045, UNS N06025, UNS N06603, UNS N08800, UNS N08810, UNS N08811, UNS N08801, UNS N08825, and UNS N08120 UNS N06686	½ to ⅝ (12.7 to 15.9), excl	0.005 (0.13)	0.005 (0.13)	12.5	12.5	25.0	0
	⅝ to 1½ (15.9 to 38.1), incl	0.0075 (0.19)	0.0075 (0.19)	10.0	10.0	20.0	0
	Over 1½ to 3 (38.1 to 76.2), incl	0.010 (0.25)	0.010 (0.25)	10.0	10.0	22.0	0

NOTE 1 — The tolerances in the Table apply to individual measurements of outside diameter and include out-of-roundness (ovality), and apply to all materials and all conditions, except that for thin wall tubes having a nominal wall of 3% or less of the outside diameter, the mean outside diameter shall comply with the permissible variations of the above Table and individual measurements (including ovality) shall conform to the plus and minus values of the Table with the values increased by ½% of the nominal outside diameter.

NOTE 2 — *Eccentricity* — The variation in wall thickness in any one cross section of any one tube shall not exceed plus or minus 10% of the actual(measured) average wall of that section. The actual average wall is defined as the average of the thickest and thinnest walls of that section.

[A] Wall variations as indicated above are applicable only to the wall as ordered, for instance, to minimum to average wall, but not to both.

6.5.3 When stress-relieved tubes with annealed ends are to be tested hydrostatically, such pressure testing shall be done prior to annealing of the ends of the tube.

	psi	MPa
Annealed low-carbon nickel UNS N02201	8 000	55.2
Stress-relieved low-carbon nickel UNS N02201	15 000	103.4
Annealed nickel UNS N02200	10 000	68.9
Stress-relieved nickel UNS N02200	16 200	111.7
Annealed nickel-copper alloy UNS N04400	17 500	120.6
Stress-relieved nickel-copper alloy UNS N04400	21 200	146.2
Annealed nickel-chromium-iron alloy UNS N06600	20 000	137.9
Annealed nickel-chromium-iron alloy UNS N06601	20 000	137.9
Annealed nickel-chromium-iron alloy UNS N06690	21 200	146
Annealed nickel-chromium-iron alloy UNS N06045	22 500	155
Annealed nickel-chromium-iron alloy UNS N06025	24 500	169
Solution annealed low-carbon nickel-chromium-molybdenum-tungsten alloy UNS N06686	25 000	172
Annealed nickel-chromium-iron-aluminum alloy UNS N06603	24 000	165
Annealed nickel-iron-chromium alloy UNS N08120	22 500	155
Annealed nickel-iron-chromium alloy UNS N08800	18 700	128.9
Annealed nickel-iron-chromium alloy UNS N08810	16 600	114.4
Annealed nickel-iron-chromium alloy UNS N08811	16 600	114.4
Annealed nickel-iron-chromium alloy UNS N08801	16 600	114.4
Annealed nickel-iron-chromium-molybdenum copper alloy UNS N08825	21 000	144.8
Cold-worked nickel-iron-chromium alloy UNS N08800	20 700	142.7

7. Dimensions and Permissible Variations

7.1 *Outside Diameter and Wall Thickness* — The permissible variations in the outside diameter and wall thickness of tube shall not exceed those prescribed in Table 4, as applicable. (See also Table 5 and Table 6.)

7.2 *Length* — When tube is ordered cut-to-length, the length shall not be less than that specified, but a variation of plus $\frac{1}{8}$ in. (3.2 mm) will be permitted, except that for lengths over 30 ft (9.1 m), a variation of plus $\frac{1}{4}$ in. (6.4 mm) will be permitted.

7.3 *Straightness* — Material shall be reasonably straight and free of bends or kinks.

8. Workmanship, Finish, and Appearance

8.1 The material shall be uniform in quality and temper, smooth, commercially straight, and free of injurious imperfections.

9. Sampling

9.1 *Lot — Definition:*

9.1.1 A lot for chemical analysis shall consist of one heat.

9.1.2 A lot for mechanical properties, hardness, flaring, and grain size testing shall consist of all material from the same heat, nominal size (excepting length), and condition (temper).

9.1.2.1 Where material cannot be identified by heat, a lot shall consist of not more than 500 lb (230 kg) of material in the same condition (temper) and size.

9.2 *Test Material Selection:*

9.2.1 *Chemical Analysis* — Representative samples shall be taken during pouring or subsequent processing.

9.2.1.1 Product (check) analysis shall be wholly the responsibility of the purchaser.

9.2.2 *Mechanical Properties, Hardness, and Grain Size* — Samples of the material to provide test specimens for mechanical properties, hardness, and grain size shall be taken from such locations in each lot as to be representative of that lot.

10. Number of Tests

10.1 *Chemical Analysis* — One test per lot.

10.2 *Mechanical Properties* — One test per lot.

10.3 *Hardness* — A representative sample consisting of 3% of each lot of tubes with annealed ends (see 9.1.2).

10.4 *Grain Size* — One test per lot.

10.5 *Flare* — A representative sample consisting of 1% of each lot of tubes with a minimum of one tube per lot.

11. Specimen Preparation

11.1 *Tension Test:*

11.1.1 Tension test specimens shall be taken from material in the final condition (temper) and tested in the direction of fabrication.

11.1.2 Whenever possible, all tubes shall be tested in full tubular size. When testing in full tubular size is not possible, longitudinal strip specimens, or the largest possible round specimen, shall be used. In the event of disagreement when full tubular testing is not possible, a longitudinal strip specimen with reduced gage length as contained in Test Methods E 8 shall be used.

11.1.3 In the case of stress-relieved tubes furnished with annealed ends, the tension test shall be made on the stress-relieved tubes prior to annealing the ends.

11.2 *Hardness Test:*

11.2.1 *Stress-Relieved Tubing With Annealed Ends* — The hardness test may be made on the inside of

TABLE 5
ALLOY,[A] CONDITION, TUBE SIZE, AND BEND RADII LIMITATIONS

Tube OD, in. (mm)	Average Tube Wall, in. (mm)[B]	Minimum Bend Radius, in. (mm)	
		Annealed Condition	Stress-Relieved Condition
Up to ½ (12.7), incl	0.046 to 0.057 (1.17 to 1.45), incl	1 3/16 (30.2)	1¼ (31.8)
Up to ½ (12.7), incl	Over 0.057 to 0.120 (1.45 to 3.05), incl	1 (25.4)	1⅛ (28.6)
Over ½ to ⅝ (12.7 to 15.9), incl	0.037 to 0.057 (0.94 to 1.45), incl	1 3/16 (30.2)	1¼ (31.8)
Over ½ to ⅝ (12.7 to 15.9), incl	Over 0.057 to 0.120 (1.45 to 3.05), incl	1 (25.4)	1 3/16 (30.2)
Over ⅝ to ¾ (15.9 to 19.0), incl	0.049 to 0.057 (1.24 to 1.45), incl	1¼ (31.8)	1½ (38.1)
Over ⅝ to ¾ (15.9 to 19.0), incl	Over 0.057 to 0.109 (1.45 to 2.77), incl	1 3/16 (30.2)	1¼ (31.8)
Over ¾ to 1 (19.0 to 25.4), incl	0.049 to 0.058 (1.24 to 1.47), incl	2 (50.8)	4 (101.6)
Over ¾ to 1 (19.0 to 25.4), incl	Over 0.058 to 0.109 (1.47 to 2.77), incl	1¾ (44.5)	2¼ (57.2)

[A] Applies for all alloys except Alloy UNS N08810, Alloy UNS N08801, and UNS N08811.
[B] To determine the bend radius applicable to minimum wall tubing, compute the corresponding average wall from the wall tolerances in Table 4, then use Table 5.

TABLE 6
ALLOYS, SIZE RANGES, AND YIELD STRENGTH FOR HIGHER YIELD STRENGTH TUBES

Alloys	Size Range, in. (mm)		0.2% Yield Strength, ksi (MPa)	
	OD	Wall Thickness	Minimum	Maximum
Nickel-Chromium-Iron Alloy UNS N06600	¼ to ⅞ (6.35 to 22.23)	Up to 0.100 (2.54)	40 (276)	65 (448)
Nickel-Chromium-Iron Alloy UNS N06601	¼ to ⅞ (6.35 to 22.23)	Up to 0.100 (2.54)	40 (276)	65 (448)
Nickel-Iron-Chromium Alloy UNS N08800	¼ to ⅞ (6.35 to 22.23)	Up to 0.100 (2.54)	40 (276)	65 (448)
Nickel-Chromium-Iron Alloy UNS N06690	¼ to ⅞ (6.35 to 22.23)	Up to 0.100 (2.54)	40 (276)	65 (448)

the tube near the end or on a specimen cut from the end, at the option of the manufacturer. The test shall be made on the inside of the specimen.

12. Test Methods

12.1 The chemical composition, mechanical, and other properties of the material as enumerated in this specification shall be determined, in case of disagreement, in accordance with the following methods:

Test	ASTM Designation
Chemical Analysis	E 76, E 1473
Tension	E 8
Rounding Procedure	E 29
Rockwell Hardness	E 18
Grain Size	E 112
Hardness Conversion	E 140

12.2 The measurement of average grain size may be carried out by the planimetric method, the comparison method, or the intercept method described in Test Methods E 112. In case of dispute the "referee" method for determining average grain size shall be the planimetric method.

12.3 For purposes of determining compliance with the specified limits for requirements of the properties listed in the following table, an observed value or a calculated value shall be rounded as indicated below, in accordance with the rounding method of Practice E 29:

Test	Rounded Unit for Observed or Calculated Value
Chemical composition, hardness, and tolerances (when expressed in decimals)	Nearest unit in the last right-hand place of figures of the specified limit
Tensile strength, yield strength	Nearest 1,000 psi (6.9 MPa)
Elongation	Nearest 1%
Grain size:	
0.0024 in. (0.060 mm) or larger	Nearest multiple of 0.0002 in. (0.005 mm)
Less than 0.0024 in. (0.060 mm)	Nearest multiple of 0.0001 in. (0.002 mm)

13. Inspection

13.1 Inspection of the material shall be made as agreed upon between the manufacturer and the purchaser as part of the purchase contract.

14. Rejection and Rehearing

14.1 Material not conforming to this specification or to authorized modifications will be subject to rejection.

14.2 Samples tested in accordance with this specification that represent rejected material shall be preserved for not less than three weeks from the date of the test report. In case of dissatisfaction with the results of the tests, the manufacturer may make claim for a rehearing within that time.

15. Certification

15.1 A manufacturer's certification shall be furnished to the purchaser stating that material has been manufactured, tested, and inspected in accordance with this specification, and that the test results on representative samples meet specification requirements. A report of the test results shall be furnished.

16. Product Marking

16.1 Each bundle or shipping container shall be marked with the name of the material; condition (temper); this specification number; the size; gross, tare, and net weight; consignor and consignee address; contract or order number; or such other information as may be defined in the contract or order.

17. Keywords

17.1 seamless tube; UNS N02200; UNS N02201; UNS N04400; UNS N06025; UNS N06045; UNS N06600; UNS N06601; UNS N06603; UNS N06686; UNS N06690; UNS N08120; UNS N08800; UNS N08801; UNS N08810; UNS N08811; UNS N08825

SUPPLEMENTARY REQUIREMENTS

S1. U-Bent Tubes

The following supplementary requirements shall apply when U-bent tubes are specified by the purchaser in the inquiry, contract, or order.

S1.1 Limitation of Supplementary Requirements for U-Bent Tubes

S1.1.1 The requirements for U-bent tubes included in this supplement are limited to the alloys, conditions (tempers), tube outside diameter (OD), and wall thickness ranges and bend radii listed in Table 5.

S1.2 Permissible Variations in Dimensions (Fig. S1)

S1.2.1 *Leg Spacing* — The leg spacing, measured between the points of tangency of the bend to the legs shall not vary from the value ($2R$ – specified tube OD) by more than the amounts shown below where R is the specified centerline bend radius:

Centerline Bend Radius (R), in. (mm)	Tolerance, in. (mm)
Up to 18 (457), incl	1/16 (1.6)
Over 18 to 30 (457 to 762), incl	3/32 (2.4)
Over 30 to 36 (762 to 914), incl	1/8 (3.2)

S1.2.2 *Diameter of Tube in U-Bent Section* — Neither the major, nor the minor outside diameter of the tube at any one cross section included within the points of tangency of the bend shall deviate from the nominal diameter prior to bending by more than 10%.

S1.2.3 *Wall Thickness of Tube in U-Bent Section* — The wall thickness of the tube at the apex of the U-bent section shall be not less than the value determined by the following equation:

$$T_f = T(2R)/(2R + D)$$

where:

T_f = thickness after bending, in. (mm)
T = minimum permissible thickness of tube wall prior to bending, in. (mm)
R = centerline bend radius, in. (mm), and
D = nominal outside diameter of the tube, in. (mm).

When specified by the purchaser, proof of conformance to this requirement shall be obtained by bending a tube specimen, representative of the material offered, to the scheduled radius of bend, cutting the tube at the apex of the bend, measuring the tube wall at the cross section of this apex section, and comparing the measured value with the calculated value of T_f.

S1.2.4 *Length of U-Bend Tube Legs* — The length of the tube legs as measured from the point of tangency of the bend and the tube leg to the end of the tube leg shall not be less than that specified, but may exceed the specified values by the following amounts:

Specified Length (L), ft (m)	Tolerance (all Plus), in. (mm)
Up to 20 (6.1), incl	1/8 (3.2)
Over 20 to 30 (6.1 to 9.1), incl	5/32 (4.0)
Over 30 to 60 (9.1 to 18.3), incl	1/4 (6.4)
Over 60 (18.3)	3/8 (10.0)

S1.2.4.1 The difference in the length of the tube legs shall not be greater than 1/8 in. (3.2 mm).

S1.2.5 *Squareness of Ends* — The end of any tube may depart from square by not more than the following amounts:

Tube OD, in. (mm)	Tolerance, in. (mm)
Up to 5/8 (15.9), incl	0.010 (0.25)
Over 5/8 (15.9)	0.016 (0.41)

S1.3 Hydrostatic Test

S1.3.1 When specified by the purchaser, the hydrostatic test shall be performed after bending. The minimum holding time at pressure shall be 5 s.

S1.3.1.1 When hydrostatic testing is performed after bending, such testing will not be required on straight length tubes prior to bending.

S1.3.1.2 The required fiber stress for computing hydrostatic test pressure shall be 26 600 psi (183.3 MPa).

S2. High Yield Strength Tubes

The following supplementary requirements shall apply when high yield strength tubes are specified by the purchaser in the inquiry, contract, or purchase order.

S2.1 Limitations of Supplementary Requirements for High Yield Strength Tubes

S2.1.1 The requirements for higher yield strength tubes included in this supplement are limited to the alloys, tube outside diameter (OD), and wall thickness ranges listed in Table 6.

S2.2 Higher Yield Strength

S2.2.1 The 0.2% yield strength shall be as listed in Table 6. All other mechanical properties shall be as listed in Table 3.

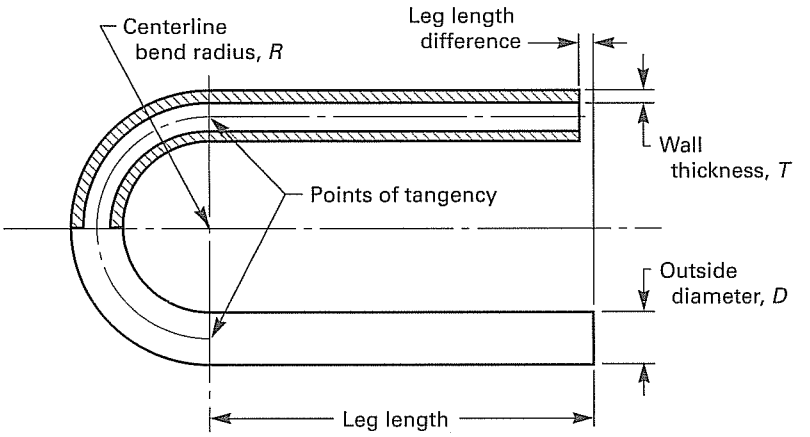

FIG. S1 BENT PORTION OF U-TUBE

S2.3 Degree of Cold Work

S2.3.1 No additional cold working over and above that normally required for these alloys shall be used in order to meet the higher yield strength.

S2.4 Annealing

S2.4.1 Tubing is to be furnished in the annealed condition. In order to meet the higher yield strength requirement, it may be necessary to control the final annealing parameters so as to preclude large grain sizes.

S2.5 Marking Requirements

S2.5.1 In addition to the marking requirements of SB-163, the marking shall include the letters HYS signifying higher yield strength.

S3. Coiled or Unstraightened Tubing

The following supplementary requirements shall apply when coiled or unstraightened tubing is specified by the purchaser in the inquiry, contract, or purchase order.

S3.1 Unstraightened Tubing

S3.1.1 When the purchaser specifies coiled or unstraightened tubing after the final heat treatment, the tensile specimens may be machine straightened prior to testing.

S3.1.2 On the certification and wherever the grade designation for unstraightened tubing appears, it shall be identified with the suffix letter "U" (for example, UNS N06600-U).

APPENDIX

(Nonmandatory Information)

X1. CONDITION AND FINISHES NORMALLY SUPPLIED

X1.1 Scope

X1.1.1 This appendix lists the conditions and finishes in which tube (other than converter sizes) is normally supplied. These are subject to change and the manufacturer should be consulted for the latest information available.

X1.2 Nickel UNS N02200

X1.2.1 *Annealed* — Soft, with a dull matte finish.

X1.2.2 *Stress Relieved* — Thermally treated below the annealing temperature to relieve the major portion of the internal stresses, with a thin, light to medium-dark surface.

X1.2.3 *Stress Relieved With Annealed Ends* — Same as X1.2.2 except with annealed ends.

X1.3 Low-Carbon Nickel UNS N02201

X1.3.1 *Annealed* — Similar to X1.2.1

X1.3.2 *Stress Relieved* — Similar to X1.2.2

X1.3.3 *Stress-Relieved With Annealed Ends* — Same as X1.3.2 except with annealed ends.

X1.4 Nickel-Copper Alloy UNS N04400

X1.4.1 *Annealed* — Soft with a dull matte finish.

X1.4.2 *Stress Relieved* — Thermally treated below the annealing temperature to relieve the major portion of the internal stresses resulting from cold drawing, with a thin, light to medium-dark surface.

X1.4.3 *Stress-Relieved With Annealed Ends* — Same as X1.4.2 except with annealed ends.

X1.5 Nickel-Chromium-Iron Alloy UNS N06600, Nickel-Chromium-Iron Alloy UNS N06601, Nickel-Chromium-Iron Alloy UNS N06690, Nickel-Chromium-Iron Alloy UNS N06045, Nickel-Chromium-Iron Alloy UNS N06025, Nickel-Iron-Chromium Alloys (UNS N08120, UNS N08800, UNS N08810, UNS N08811, and UNS N08801), and Nickel-Iron-Chromium-Molybdenum-Copper Alloy UNS N08825

X1.5.1 *Annealed and Ground Outside Diameter* — The inside diameter may have a bright finish when material is annealed in protective atmosphere; otherwise, the inside diameter is supplied descaled as necessary.

X1.5.2 *Annealed and Pickled (Not Ground)* — Outside and inside diameter will have dull, matte (pickled) surfaces.

SPECIFICATION FOR NICKEL-COPPER ALLOY ROD, BAR, AND WIRE

SB-164

(Identical with ASTM Specification B 164-93 except for the deletion of forging quality and Supplementary Requirements for U.S. government procurement. Certification has been made mandatory.)

1. Scope

1.1 This specification covers nickel-copper alloys UNS N04400 and N04405 in the form of hot-worked and cold-worked rod and bar in the conditions shown in Table 2 and cold-worked wire in the conditions shown in Table 3.

1.2 The values stated in inch-pound units are to be regarded as the standard. The values given in parentheses are for information only.

2. Referenced Documents

2.1 *ASTM Standards:*

B 127 Specification for Nickel-Copper Alloy (UNS N04400) Plate, Sheet, and Strip

E 8 Test Methods of Tension Testing of Metallic Materials

E 18 Test Methods for Rockwell Hardness and Rockwell Superficial Hardness of Metallic Materials

E 29 Practice for Using Significant Digits in Test Data to Determine Conformance with Specifications

E 76 Test Methods for Chemical Analysis of Nickel-Copper Alloys

E 140 Hardness Conversion Tables for Metals (Relationship Between Brinell Hardness, Vickers Hardness, Rockwell Hardness, Rockwell Superficial Hardness, and Knoop Hardness)

3. Terminology

3.1 *Descriptions of Terms Specific to This Standard:*

3.1.1 *bar* — material of rectangular (flats), hexagonal, or square solid section up to and including 10 in. (254 mm) in width and $\frac{1}{8}$ in. (3.2 mm) and over in thickness in straight lengths.

3.1.2 *rod* — material of round solid section furnished in straight lengths.

3.1.3 *wire* — a cold-worked solid product of uniform round cross section along its whole length, supplied in coiled form.

NOTE 1 — Hot-worked rectangular bar in widths 10 in. and under may be furnished as hot-rolled plate with sheared or cut edges in accordance with Specification B 127, provided the mechanical property requirements of Specification B 164 are met.

4. Ordering Information

4.1 Orders for material to this specification shall include information as follows:

4.1.1 ASTM designation and year of issue.

4.1.2 UNS number

4.1.3 *Section* — Rod (round) or bar (square, hexagonal, or rectangular) or wire (round).

4.1.4 *Dimensions* — Dimensions including length.

4.1.5 Condition.

4.1.6 Finish.

4.1.7 *Quantity* — feet or number of pieces.

4.1.8 *Samples for Product (Check) Analysis* — State whether samples for product (check) analysis should be furnished.

4.1.9 *Purchaser Inspection* — If purchaser wishes to witness tests or inspection of material at place of manufacture, the purchase order must so state indicating which tests or inspections are to be witnessed.

5. Chemical Composition

5.1 The material shall conform to the composition limits specified in Table 1.

TABLE 1
CHEMICAL REQUIREMENTS

Element	Composition Limits, % UNS N04400	Composition Limits, % N04405	Product (Check) Analysis Variations, under min or over max, of the Specified Limit of Element, %
Nickel[A]	63.0 min	63.0 min	0.45
Copper	28.0 min	28.0 min	0.15
	34.00 max	34.00 max	0.20
Iron	2.5 max	2.5 max	0.05
Manganese	2.0 max	2.0 max	0.04
Carbon	0.3 max	0.3 max	0.02
Silicon	0.5 max	0.5 max	0.03
Sulfur	0.024 max	0.025 min	0.005
		0.060 max	0.005

[A] Element shall be determined arithmetically by difference.

5.2 If a product (check) analysis is performed by the purchaser, the material shall conform to the product (check) analysis variations in Table 1.

6. Mechanical Properties

6.1 *Mechanical Properties* — The material shall conform to the mechanical properties specified in Table 2 for rod or bar, or in Table 3 for wire.

7. Dimensions and Permissible Variations

7.1 *Diameter, Thickness, or Width* — The permissible variations from the specified dimensions as measured on the diameter or between parallel surfaces of cold-worked rod and bar shall be as prescribed in Table 4, and of hot-worked rod and bar as prescribed in Table 5. The permissible variations in diameter of cold-worked wire shall be as prescribed in Table 6.

7.2 *Out-of-Round* — Hot-worked rods and cold-worked rods (except "forging quality") all sizes, in straight lengths, shall not be out-of-round by more than one half the total permissible variations in diameter shown in Tables 4 and 5, except for hot-worked rods ½ in. (12.7 mm) in diameter and under, which may be out-of-round by the total permissible variations in diameter shown in Table 5. Wire shall not be out-of-round by more than one-half the total permissible variations shown in Table 6.

7.3 *Corners* — Cold-worked bars will have practically exact angles and sharp corners.

7.4 *Machining Allowances for Hot-Worked Materials* — When the surfaces of hot-worked products are to be machined, the allowances prescribed in Table 7 are recommended for normal machining operations.

7.5 *Length* — The permissible variations in length of cold-worked and hot-worked rod and bar shall be as prescribed in Table 8.

7.5.1 Rods and bars ordered to random or nominal lengths will be furnished with either cropped or saw-cut ends; material ordered to cut lengths will be furnished with square saw-cut or machined ends.

7.6 *Straightness:*

7.6.1 The permissible variations in straightness of cold-worked rod and bar as determined by the departure from straightness shall be as prescribed in Table 9.

7.6.2 The permissible variations in straightness of precision straightened cold-worked rod as determined by the departure from straightness shall be as prescribed in Table 10.

7.6.2.1 In determining straightness in the standard 42-in. (1.07-m) distance between supports or, when specified, in determining straightness in lengths not in excess of those shown in Table 10, the rod shall be placed on a precision table equipped with ball-bearing rollers and a micrometer or dial indicator. The rod shall then be rotated slowly against the indicator, and the deviation from straightness in any portion of the rod between the supports shall not exceed the permissible variations prescribed in Table 10. The deviation from straightness (throw in one revolution) is defined as the difference between the maximum and minimum readings of the dial indicator in one complete revolution of the rod.

7.6.3 The permissible variations in straightness of hot-worked rod and bar as determined by the departure from straightness shall be as specified in Table 11.

8. Workmanship, Finish, and Appearance

8.1 The material shall be uniform in quality and condition, smooth, commercially straight or flat, and free of injurious imperfections.

9. Sampling

9.1 *Lot — Definition:*

9.1.1 A lot for chemical analysis shall consist of one heat.

9.1.2 A lot for mechanical properties testing shall consist of all material from the same heat, nominal diameter or thickness, and condition.

9.1.2.1 Where material cannot be identified by heat, a lot shall consist of not more than 500 lb (227 kg) of material in the same size and conditions.

TABLE 2
MECHANICAL PROPERTIES OF ROD AND BAR

Condition and Diameter or Distance Between Parallel Surfaces, in. (mm)	Tensile Strength min, psi (MPa)	Yield Strength (0.2% offset)[A] min., psi (MPa)	Elongation in 2 in. or 50 mm (or 4D), min, %	Rockwell Hardness (or equivalent)
UNS N04400				
Cold-worked (as worked):				
Rounds under 1/2 (12.7)	110 000 (760)	85 000 (585)	8[B]	...
Squares, hexagons, and rectangles under 1/2 (12.7)	85 000 (585)	55 000 (380)	10[B]	...
Cold-worked (stress-relieved):				
Rounds under 1/2 (12.7)	84 000 (580)	50 000 (345)	10[B]	...
Rounds, 1/2 to 3 1/2 (12.7 to 88.9), incl	87 000 (600)	60 000 (415)	20	...
Rounds, over 3 1/2 to 4 (88.9 to 101.6), incl	84 000 (580)	55 000 (380)	20	...
Squares, hexagons and rectangles, 2 (50.8) and under	84 000 (580)	50 000 (345)	20[B,C]	...
Squares, hexagons and rectangles, over 2 (50.8) to 3 1/8 (79.4), incl	80 000 (552)	50 000 (345)	20	...
Hot-worked (as worked or stress-relieved):				
Rounds, squares, and rectangles up to 12 (305), incl, and hexagons 2 1/8 (54) and under	80 000 (552)	40 000 (276)	30[D]	...
Rounds, squares, and rectangles over 12 (305) to 14 (356), incl	75 000 (517)	40 000 (276)	30	...
Hexagons over 2 1/8 (54) to 4 (102), incl	75 000 (517)	30 000 (207)	25	...
Rings and disks	...	...	...	B 75 to B 95
Hot-worked (annealed) or cold-worked (annealed):				
Rod and bar, all sizes	70 000 (480)	25 000 (170)	35	...
Rings and disks	...	...	...	B 60 to B 75
Forging quality:[E]				
All sizes	...	...	...	...
UNS N04405				
Cold-worked (as worked or stress-relieved):				
Rounds, under 1/2 (12.7)	85 000 (585)	50 000 (345)	8[B]	...
Rounds, 1/2 (12.7) to 3 (76.2), incl	85 000 (585)	50 000 (345)	15	...
Rounds, over 3 (76.2) to 4 (101.6), incl	80 000 (552)	50 000 (345)	15	...
Hexagons and squares 2 (50.8) and under	85 000 (585)	50 000 (345)	15[B,C]	...
Hexagons and squares over 2 (50.8) to 3 1/8 (79.4), incl	80 000 (552)	45 000 (310)	15	...
Hot-worked (as hot-worked or stress-relieved):				
Rounds 3 (76.2) and less	75 000 (517)	35 000 (241)	30	...
Hexagons and squares, 2 1/8 (54) and less	75 000 (517)	35 000 (241)	30	...
Hexagons and squares, over 2 1/8 (54) to 4 (101.6), incl	70 000 (480)	30 000 (207)	25	...
Hot-worked (annealed) or cold-worked (annealed):				
Rod and Bar, All sizes	70 000 (480)	25 000 (170)	35	...

[A] See 12.2.
[B] Not applicable to diameters or cross sections under 3/32 in. (2.4 mm).
[C] For sections under 1/2 in. (12.7 mm), the elongation shall be 10% min.
[D] For hot-worked flats 5/16 in. (7.9 mm) and under in thickness the elongation shall be 20% min.
[E] Forging quality is furnished to chemical requirements and surface inspection only. No tensile properties are required.

TABLE 3
MECHANICAL PROPERTIES OF COLD-WORKED WIRE IN COIL[A]

Alloy Condition and Size, in. (mm)	Tensile Strength, psi (MPa) Min	Tensile Strength, psi (MPa) Max	Wrapping Test
UNS N04400 and N04405:			
Annealed, all sizes	70 000 (483)	85 000 (586)	All wire shall wrap around a rod of the same diameter as the wire without cracking
No. 0 temper, under 1/2 (12.7)	80 000 (552)	95 000 (655)	
No. 1 temper, under 1/2 (12.7)	90 000 (621)	110 000 (758)	
UNS N04400			
Regular temper, under 1/2 (12.7)	110 000 (758)	140 000 (965)	All wire up to 0.2294 in. (5.84 mm) inclusive, shall wrap around a rod of the same diameter as the wire without cracking. Wire over 0.2294 in. diameter shall wrap around a rod of twice the wire diameter without cracking.
Regular temper, 1/2 (12.7) and over	90 000 (621)	130 000 (896)	
Spring temper			
0.028 (0.71) and less	165 000 (1138)	...	
Over 0.028 (0.71) to 0.057 (1.45), incl	160 000 (1103)	...	
Over 0.057 (1.45) to 0.114 (2.90), incl	150 000 (1034)	...	
Over 0.114 (2.90) to 0.312 (7.92), incl	140 000 (965)	...	
Over 0.312 (7.92) to 0.375 (9.53), incl	135 000 (931)	...	...
Over 0.375 (9.53) to 0.500 (12.7), incl	130 000 (896)	...	...
Over 0.500 (12.7) to 0.563 (14.3), incl	120 000 (827)	...	...

[A] Properties are not applicable to wire after straightening and cutting.

TABLE 4
PERMISSIBLE VARIATIONS IN DIAMETER OR DISTANCE BETWEEN PARALLEL SURFACES OF COLD-WORKED ROD AND BAR

Specified Dimension, in. (mm)[A]	Permissible Variations from Specified Dimension, in. (mm) +	Permissible Variations from Specified Dimension, in. (mm) −
Rounds:		
1/16 (1.6) to 3/16 (4.8), excl	0	0.002 (0.05)
3/16 (4.8) to 1/2 (12.7), excl	0	0.003 (0.08)
1/2 (12.7) to 15/16 (23.8), incl	0.001 (0.03)	0.002 (0.05)
over 15/16 (23.8) to 1 15/16 (49.2), incl	0.0015 (0.04)	0.003 (0.08)
over 1 15/16 (49.2) to 2 1/2 (63.5), incl	0.002 (0.05)	0.004 (0.10)
over 2 1/2 (63.5) to 3 (76.2), incl	0.0025 (0.06)	0.005 (0.13)
over 3 (76.2) to 3 1/2 (88.9), incl	0.003 (0.08)	0.006 (0.15)
over 3 1/2 (88.9) to 4 (101.6), incl	0.0035 (0.09)	0.007 (0.18)
Hexagons, squares, rectangles:		
1/2 (12.7) and less	0	0.004 (0.10)
over 1/2 (12.7) to 7/8 (22.2), incl	0	0.005 (0.13)
over 7/8 (22.2) to 1 1/4 (31.8), incl	0	0.007 (0.18)
over 1 1/4 (31.8) to 2 1/4 (57.2), incl	0	0.009 (0.23)
over 2 1/4 (57.2) to 3 (76.2), incl	0	0.011 (0.28)
over 3 (76.2) to 3 1/2 (88.9), incl	0	0.015 (0.38)
over 3 1/2 (88.9) to 4 (101.6), incl	0	0.017 (0.43)

[A] Dimensions apply to diameter of rounds, to distance between parallel surfaces of hexagons and squares, and separately to width and thickness of rectangles.

TABLE 5
PERMISSIBLE VARIATIONS IN DIAMETER OR DISTANCE BETWEEN PARALLEL SURFACES OF HOT-WORKED ROD AND BAR

Specified Dimension, in. (mm)[A]	Permissible Variations from Specified Dimensions, in. (mm) +	−
Rod and bar, hot-worked:		
1 (25.4) and under	0.016 (0.41)	0.016 (0.41)
over 1 (25.4) to 2 (50.8), incl	0.031 (0.79)	0.016 (0.41)
over 2 (50.8) to 4 (101.6), incl	0.047 (1.19)	0.031 (0.79)
over 4 (101.6)	0.125 (3.18)	0.063 (1.60)
Rod, rough-turned or ground:		
under 1 (25.4)	0.005 (0.13)	0.005 (0.13)
1 (25.4) and over	0.031 (0.79)	0
Forging quality rod:[B]		
Under 1 (25.4)	0.005 (0.13)	0.005 (0.13)
1 (25.4) and over	0.031 (0.79)	0

[A] Dimensions apply to diameter of rods, to distance between parallel surfaces of hexagons and squares, and separately to width and thickness of rectangles.

[B] Spot grinding is permitted to remove minor surface imperfections. The depth of these spot ground areas shall not exceed 3% of the diameter of the rod.

TABLE 6
PERMISSIBLE VARIATIONS IN DIAMETER OF COLD-WORKED WIRE

Diameter, in. (mm)	Permissible Variations, in. (mm), ±
Under 0.0044 (0.11)	0.0002 (0.005)
0.0044 (0.11) to 0.0079 (0.20), incl	0.00025 (0.006)
Over 0.0079 (0.20) to 0.0149 (0.38), incl	0.0003 (0.008)
Over 0.0149 (0.38) to 0.0199 (0.51), incl	0.0004 (0.010)
Over 0.0199 (0.51) to 0.031 (0.79), incl	0.0005 (0.013)
Over 0.031 (0.79) to 0.045 (1.14), incl	0.0006 (0.015)
Over 0.045 (1.14) to 0.079 (2.01), incl	0.0007 (0.018)
Over 0.079 (2.01) to 0.1875 (4.76), incl	0.001 (0.025)
Over 0.1875 (4.76) to 0.3125 (7.93), incl	0.002 (0.051)
Over 0.3125 (7.93)	0.003 (0.076)

9.2 *Test Material Selection:*

9.2.1 *Chemical Analysis* — Representative samples from each lot shall be taken during pouring or subsequent processing.

9.2.1.1 Product (check) analysis shall be wholly the responsibility of the purchaser.

9.2.2 *Mechanical Properties* — Samples of the material to provide test specimens for mechanical properties shall be taken from such locations in each lot as to be representative of that lot.

10. Number of Tests

10.1 *Chemical Analysis* — One test per lot.

10.2 *Tension* — One test per lot.

10.3 *Hardness* — One test per lot.

10.4 *Wrapping* — One test per lot.

11. Specimen Preparation

11.1 Tension test specimens shall be taken from material in the final condition and tested in the direction of fabrication.

11.1.1 All rod, bar, and wire shall be tested in full cross-section size when possible. When a full cross-section size test cannot be performed, the largest possible round specimen shown in Test Methods E 8 shall be used. Longitudinal strip specimens shall be prepared in accordance with Test Methods E 8 for rectangular bar up $\frac{1}{2}$ in. (12.7 mm), inclusive, in thickness that are too wide to be pulled full size.

TABLE 7
NORMAL MACHINING ALLOWANCES FOR HOT-WORKED MATERIAL

Finished-Machined Dimensions for Finishes as Indicate Below in. (mm)[A]	Normal Machining Allowance, in. (mm)			
	On Diameter, for Rods	Distance Between Parallel Surfaces, for Hexagonal and Square Bar	For Rectangular Bar	
			On Thickness	On Width
Hot-worked:[B]				
Up to 7/8 (22.2), incl	1/8 (3.2)	1/8 (3.2)	1/8 (3.2)	3/16 (4.8)
Over 7/8 to 1 7/8 (22.2 to 47.6), incl	1/8 (3.2)	3/16 (4.8)	1/8 (3.2)	3/16 (4.8)
Over 1 7/8 to 2 7/8 (47.6 to 73.0), incl	3/16 (4.8)	1/4 (6.4)	...	3/16 (4.8)
Over 2 7/8 to 3 13/16 (73.0 to 96.8), incl	1/4 (6.4)	...	...	3/16 (4.8)
Over 3 13/16 (96.8)	1/4 (6.4)	...	...	3/8 (9.5)
Hot-worked rods:				
Rough-turned or rough-ground:[C]				
15/16 to 4 (23.8 to 101.6), incl, in diameter	1/16 (1.6)	...	...	...
Over 4 to 12 (101.6 to 304.8), incl, in diameter	1/8 (3.2)	...	...	...

[A] Dimensions apply to diameter of rods, to distance between parallel surfaces of hexagonal and square bar, and separately to width and thickness of rectangular bar.

[B] The allowances for hot-worked material in Table 5 are recommended for rods machined in lengths of 3 ft (0.91 m) or less and for bars machined in lengths of 2 ft (0.61 m) or less. Hot-worked material to be machined in longer lengths should be specified showing the finished cross-sectional dimension and the length in which the material will be machined in order that the manufacturer may supply material with sufficient oversize, including allowance for out-of-straightness.

[C] Applicable to 3 ft (0.91 m) max length.

11.2 Hardness test specimens shall be taken from material in the final condition.

11.3 In order that the hardness determinations may be in reasonably close agreement, the following procedure is suggested:

11.3.1 For rod and wire under 1/2 in. (12.7 mm) in diameter, hardness readings shall be taken on a flat surface prepared by filing or grinding approximately 1/16 in. (1.6 mm) from the outside surface of the rod.

11.3.2 For rod and wire 1/2 in. in diameter and larger, and for hexagonal, square, and rectangular bar, all sizes, hardness readings shall be taken on a cross section midway between the surface and center of the section.

12. Test Methods

12.1 The chemical composition, mechanical, and other properties of the material as enumerated in this specification shall be determined, in case of disagreement, in accordance with the following methods:

Test	ASTM Designation
Chemical Analysis	E 76
Tension	E 8
Rockwell Hardness	E 18
Hardness Conversion	E 140
Rounding Procedure	E 29

12.2 For purposes of determining compliance with the specified limits for requirements of the properties listed in the following table, an observed value or a calculated value shall be rounded as indicated below, in accordance with the rounding method of Practice E 29:

Test	Rounded Unit for Observed or Calculated Value
Chemical composition, hardness, and tolerances (when expressed in decimals)	Nearest unit in the last right-hand place of figures of the specified limit. If two choices are possible, as when the digits dropped are exactly a 5, or a 5 followed only by zeros, choose the one ending in an even digit, with zero defined as an even digit.
Tensile strength and yield strength	Nearest 1000 psi (6.9 MPa)
Elongation	Nearest 1%

13. Inspection

13.1 Inspection of the material shall be made as agreed upon between the manufacturer and the purchaser as part of the purchase contract.

14. Rejection and Rehearing

14.1 Material, tested by the purchaser, that fails to conform to the requirements of this specification may be rejected. Rejection should be reported to the producer or

TABLE 8
PERMISSIBLE VARIATIONS IN LENGTH OF RODS AND BAR

Random mill lengths:	
Hot-worked	6 to 24 ft (1.83 to 7.31 m) long with not more than 25 weight % between 6 and 9 ft (1.83 and 2.74 m)[A]
Cold-worked	6 to 20 ft (1.83 to 6.1 m) long with not more than 25 weight % between 6 and 10 ft (1.83 and 3.05 m).
Multiple lengths	Furnished in multiples of a specified unit length, within the length limits indicated above. For each multiple, an allowance of $\frac{1}{4}$ in. (6.4 mm) will be made for cutting, unless otherwise specified. At the manufacturer's option, individual specified unit lengths may be furnished.
Nominal lengths	Specified nominal lengths having a range of not less than 2 ft (610 mm) with no short lengths allowed[B]
Cut lengths	A specified length to which all rods and bars will be cut with a permissible variation of plus $\frac{1}{8}$ in. (3.2 mm), minus 0 for sizes 8 in. (203 mm) and less in diameter or distance between parallel surfaces. For larger sizes, the permissible variation shall be $+\frac{1}{4}$ in. (6.4 mm), −0.

[A] For hot-worked sections weighing over 25 lb/ft (37 kg/m) and for smooth forged products, all sections, short lengths down to 2 ft (610 mm) may be furnished.

[B] For cold-worked rods and bars under $\frac{1}{2}$ in. (12.7 mm) in diameter or distance between parallel surfaces ordered to nominal or stock lengths with a 2-ft (610-mm) range, at least 93% of such material shall be within the range specified; the balance may be in shorter lengths but in no case shall lengths less than 4 ft (1220 mm) be furnished.

TABLE 9
PERMISSIBLE VARIATIONS IN STRAIGHTNESS OF COLD-WORKED RODS AND BARS

Specified Diameter or Distance Between Parallel Surfaces, in. (mm)[A]	Permissible Variations in Lengths Indicated, in. (mm)
Rounds:	Depth of Chord:
½ (12.7) to 4 (101.6), incl	0.030 (0.76) per ft (305 mm) of length
Hexagons, Squares, Rectangles:	
½ (12.7) to 4 (101.6), incl	0.030 (0.76) per ft (305 mm) of length

[A] Material under ½ in. (12.7 mm) shall be reasonably straight and free of sharp bends and kinks.

supplier promptly and in writing. In case of dissatisfaction with the results of the test, the producer or supplier may make claim for a rehearing.

15. Certification

15.1 Certification shall be furnished to the purchaser that the material was manufactured, sampled, tested, and inspected in accordance with this specification and has been found to meet the requirements. When specified in the purchase order or contract, a report of the test results shall be furnished.

16. Product Marking

16.1 The following information shall be marked on the material or included on the package, or on a label or tag attached thereto: The name of the material or UNS Number, heat number, condition (temper), ASTM B 164, the size, gross, tare, and net weight, consignor and consignee address, contract or order number, or such other information as may be defined in the contract or order.

TABLE 10
PERMISSIBLE VARIATIONS IN STRAIGHTNESS OF PRECISION-STRAIGHTENED COLD-WORKED SHAFTING UNS N04400 ONLY

Specified Diameter of Shafting, in.	Standard Distance Between Supports	Permissible Variations (Throw in One Revolution) from Straightness, in.
1/2 to 15/16, incl	42 in.	0.005
Over 15/16 to 1 15/16, incl	42 in.	0.006
Over 1 15/16 to 2 1/2, incl	42 in.	0.007
Over 2 1/2 to 4, incl	42 in.	0.008
3/4 to 15/16, incl	Specified lengths of 3 to 10 ft.	0.004 plus 0.0025 for each foot or fraction thereof in excess of 3 ft
Over 15/16 to 4, incl	Specified lengths of 20 ft and less	0.005 plus 0.0015 for each foot or fraction thereof in excess of 3 ft

Specified Diameter of Shafting, mm	Standard Distance Between Supports	Permissible Variations (Throw in One Revolution) from Straightness, mm
12.7 to 23.8, incl	1067 mm	0.13
Over 23.8 to 49.2, incl	1067 mm	0.15
Over 49.2 to 63.5, incl	1067 mm	0.18
Over 63.5 to 101.6, incl	1067 mm	0.20
19.1 to 23.8, incl	specified lengths of 914 to 3050 mm	10.2 plus 0.2 for each metre or fraction thereof in excess of 914 mm
Over 23.8 to 101.6, incl	specified lengths of 6100 mm and less.	12.7 plus 0.13 for each metre or fraction thereof in excess of 914 mm

TABLE 11
PERMISSIBLE VARIATIONS IN STRAIGHTNESS OF HOT-WORKED RODS AND BARS[A]

Finish	Permissible Variations, in./ft (mm/m)[B]
Rods and bars, hot-worked	0.050 (4.2)[C]
Round—hot worked, rough-ground, or rough-turned	0.050 (4.2)[C]

[A] Not applicable to forging quality.

[B] Material under ½ in. (12.7 mm) shall be reasonably straight and free of sharp bends and kinks.

[C] The maximum curvature (depth of chord) shall not exceed the values indicated multiplied by the length in feet.

APPENDIX

(Nonmandatory Information)

X1. CONDITIONS AND FINISHES NORMALLY SUPPLIED

X1.1 The various conditions and finishes in which rod and bar are procurable are as follows:

X1.1.1 *Hot-Worked* — With a tightly adherent, black, mill oxide surface.

X1.1.2 *Hot-Worked, Rough-Ground* — Similar to X1.1.1 except rough-ground.

X1.1.3 *Hot-Worked, Rough-Turned* — Similar to X1.1.1 except rough turned with a broad nosed tool similar to a bar peeling operation and thus may not be straight. Intended generally for machining where an over-hauled surface is desired, essentially for machined step down shafts or parts machined in short lengths of 3 ft (910 mm) or less.

X1.1.3.1 Where material is intended for shafting for diameters over 4 in. (101.6 mm) the "stress-relieved" temper is recommended.

NOTE X1.1 — For sizes 4 in. in diameter and less, cold-worked rod may be used also for forging by virtue of the fact such rod has been overhauled for removal of mechanical surface defects prior to cold-working. In such cases, the user should run pilot forging tests to ensure himself that such material has the desired hot malleability range.

X1.1.4 *Hot-Worked, Annealed* — Soft with a tightly adherent oxide that may vary from dark to light.

X1.1.5 *Hot-Worked, Annealed, and Pickled* — Same as X1.1.4 except descaled for removal of mill oxide. Provides for better surface inspection than does hot-worked material and often employed where welding is involved where removal of mill oxide is desired.

NOTE X1.2 — Annealing prior to pickling may be required in order to reduce the mill oxide since uniform pickling of an unreduced oxide is difficult.

X1.1.6 *Cold-Worked, Stress-Relieved* — Hot worked, overhauled, cold-worked, and straightened. Material is thermally treated to relieve the major portion of the internal stresses resulting from cold-working and may have a very thin light to medium oxide. Intended primarily for shafting and for machined parts where minimum "walking" or distortion after metal removal is desired.

X1.1.7 *Cold-Worked, Annealed* — Hot-worked, overhauled, cold-worked, and straightened. Annealed for softness and with a dull matte finish.

NOTE X1.3: *UNS N04405 Material* — This is the machining grade and is preferred generally to UNS N04400 for intricately machined parts, particularly for parts that are to be machined on automatics or require drilling.

SPECIFICATION FOR NICKEL-COPPER ALLOY (UNS N04400) SEAMLESS PIPE AND TUBE

SB-165

(Identical with ASTM Specification B 165-93 except for deletion of 1.1.1, Appendix X1, and Supplementary Requirements, and editorial differences. Certification has been made mandatory.)

1. Scope

1.1 This specification covers nickel-copper alloy UNS N04400 in the form of cold-worked seamless pipe and tube in the conditions shown in Table 1.

1.2 The values stated in inch-pound units are to be regarded as the standard. The values given in parentheses are for information only.

2. Referenced Documents

2.1 *ASTM Standards:*

E 8 Test Methods of Tension Testing of Metallic Materials

E 29 Practice For Using Significant Digits in Test Data to Determine Conformance with Specifications

E 76 Test Methods for Chemical Analysis of Nickel-Copper Alloys

3. Terminology

3.1 *Descriptions of Terms Specific to This Standard:*

3.1.1 *average diameter* — average of the maximum and minimum outside diameters, as determined at any one cross-section of the pipe or tube.

3.1.2 *pipe* — tube conforming to the particular dimensions commercially known as pipe sizes.

3.1.3 *seamless pipe or tube* — pipe or tube produced with a continuous periphery in all stages of the operations.

3.1.4 *tube* — hollow product of round or any other cross-section having a continuous periphery.

4. Ordering Information

4.1 Orders for material to this specification shall include information with respect to the following:

4.1.1 Alloy name or UNS number.

TABLE 1
MECHANICAL PROPERTIES OF PIPE AND TUBE

Condition and Size	Tensile Strength, min, psi (MPa)	Yield Strength, min. (0.2% offset), min, psi (MPa)	Elongation in 2 in. or 50 mm (or 4 *D*), min, %
Annealed:			
5 in. (127 mm) outside diameter and under	70 000 (480)	28 000 (195)	35
Over 5 in. (127 mm) outside diameter	70 000 (480)	25 000 (170)	35
Stress-Relieved			
All sizes	85 000 (585)	55 000 (380)	15

TABLE 2
CHEMICAL REQUIREMENTS

Element	Composition Limits, %	Product (Check) Analysis Variations, under min or over max, of the Specified Limit of Element
Ni[A]	63.0 min	0.45
Cu	28.0 min	0.15
	34.0 max	0.20
Fe	2.5 max	0.05
Mn	2.0 max	0.04
C	0.3 max	0.02
Si	0.5 max	0.03
S	0.024 max	0.005

[A] Element shall be determined arithmetically by difference.

4.1.2 Specification designation.

4.1.3 *Condition* (see Appendix X2).

4.1.4 *Finish* (see Appendix X2).

4.1.5 *Dimensions:*

4.1.5.1 *Tube* — Specify outside diameter and nominal or minimum wall.

4.1.5.2 *Pipe* — Specify standard pipe size and schedule.

4.1.5.3 *Length* — Cut to length or random.

4.1.6 *Quantity* — Feet or number of pieces.

4.1.7 *Hydrostatic Pressure Requirements* — Specify test pressure if other than required by 12.3.1.

4.1.8 *Samples for Product (Check) Analysis* — State whether samples for product (check) analysis should be furnished (see 5.2).

4.1.9 *Purchaser Inspection* — If purchaser wishes to witness tests or inspection of material at place of manufacture, the purchase order must so state indicating which tests or inspections are to be witnessed (Section 13).

5. Chemical Composition

5.1 The material shall conform to the composition limits specified in Table 2.

5.2 If a product (check) analysis is performed by the purchaser, the material shall conform to the product (check) analysis variations in Table 2.

6. Mechanical and Other Requirements

6.1 *Tension Test* — The material shall conform to the tensile properties specified in Table 1.

6.2 *Hydrostatic Test* — If any pipe or tube shows leaks during hydrostatic testing, it shall be rejected.

7. Dimensions and Permissible Variations

7.1 *Diameter and Wall Thickness* — The permissible variations in the outside diameter and wall thickness shall conform to the permissible variations prescribed in Table 3.

7.2 *Length* — When material is ordered cut-to-length, the length shall conform to the permissible variations prescribed in Table 4.

7.3 *Straightness* — material shall be reasonably straight and free of bends and kinks.

7.4 *Ends* — Ends shall be plain cut and deburred.

8. Workmanship, Finish and Appearance

8.1 The material shall be uniform in quality and temper, smooth, commercially straight, and free of injurious imperfections.

9. Sampling

9.1 *Lot Definition:*

9.1.1 A lot for chemical analysis shall consist of one heat.

9.1.2 A lot for all other testing shall consist of all material from the same heat, nominal size (excepting length), and condition.

9.1.2.1 Where material cannot be identified by heat, a lot shall consist of not more than 500 lb (227 kg) of material in the same condition and nominal size (excepting length).

9.2 *Test Material Selection:*

9.2.1 *Chemical Analysis* — Representative samples from each lot shall be taken during pouring or subsequent processing.

9.2.1.1 Product (check) analysis shall be wholly the responsibility of the purchaser.

9.2.2 *Mechanical and other Properties* — Samples of the material to provide test specimens for mechanical and other properties shall be taken from such locations in each lot as to be representative of that lot. Test specimens shall be taken from material in the final condition.

10. Number of Tests

10.1 *Chemical Analysis* — One test per lot.

10.2 *Tension* — One test per lot.

10.3 *Hydrostatic* — Each piece in each lot.

TABLE 3
PERMISSIBLE VARIATIONS FOR OUTSIDE DIAMETER AND WALL THICKNESS OF SEAMLESS COLD WORKED PIPE AND TUBE[A,B]

Nominal Outside Diameter, in. (mm)	Permissible Variations					
	Outside Diameter, in. (mm)		% of Thickness of Specified Nominal Wall		% of Thickness of Specified Minimum Wall	
	+	−	+	−	+	−
Over 0.400 (10) to 5/8 (16), excl	0.005 (0.13)	0.005 (0.13)	15.0	15.0	30	0
5/8 (16) to 1 1/2 (38), incl	0.0075 (0.19)	0.0075 (0.19)	10.0	10.0	22	0
Over 1 1/2 (38) to 3 (76), incl	0.010 (0.25)	0.010 (0.25)	10.0	10.0	22	0
Over 3 (76) to 4 1/2 (114), incl	0.015 (0.38)	0.015 (0.38)	10.0	10.0	22	0
Over 4 1/2 (114) to 6 (152), incl	0.020 (0.51)	0.020 (0.51)	12.5	12.5	28	0
Over 6 (152) to 6 5/8 (168), incl	0.025 (0.64)	0.025 (0.64)	12.5	12.5	28	0
Over 6 5/8 (168) to 8 5/8 (219), incl	0.031 (0.79)	0.031 (0.79)	12.5	12.5	28	0

[A] *Ovality* — The permissible variations in this table apply to individual measurements, including out-of-roundness (ovality) except for the following:

For pipe and tube having a nominal wall thickness of 3% or less of the nominal outside diameter, the mean outside diameter shall conform to the permissible variations of this table and individual measurements (including ovality) shall conform to the plus and minus values of the table, with the values increased by 0.5% of the nominal outside diameter.

For pipe and tube over 4 1/2 in. (114 mm) in outside diameter with a nominal wall thickness greater than 3% of the nominal outside diameter, the mean outside diameter shall conform to the permissible variations of this table and individual measurements shall not exceed twice the permissible variations of the table.

[B] *Eccentricity* — The permissible variations in this table apply to individual measurements including eccentricity.

TABLE 4
PERMISSIBLE VARIATIONS IN LENGTH[A]

Outside Diameter, in. (mm)	Cut Length, in. (mm)	
	Over	Under
Under 2 (50.8)	1/8 (3.2)	0
2 (50.8) and over	3/16 (4.8)	0

[A] These permissible variations in length apply to pipe or tube in straight lengths. They apply to cut lengths up to and including 24 ft (7.3 m). For lengths over 24 ft, an additional over-tolerance of 1/8 in. (3.2 mm) for each 10 ft (3.0 m) or fraction thereof shall be permissible up to a maximum additional over-tolerance of 1/2 in. (12.7 mm).

11. Specimen Preparation

11.1 *Room Temperature Tensile Specimen* — Material shall be tested in the direction of fabrication. Whenever possible, all pipe and tubes shall be tested in full tubular size. When testing in full tubular size is not possible, longitudinal strip specimens, or the largest possible round specimen, shall be used. In the event of disagreement when full tubular testing is not possible, a longitudinal strip specimen with reduced gauge length as contained in Test Methods E 8 shall be used.

12. Test Methods

12.1 *Chemical Composition* — In case of disagreement, the chemical composition shall be determined in accordance with Test Methods E 76.

12.2 *Tension Test* — Tension testing shall be conducted in accordance with Test Methods E 8.

12.3 *Hydrostatic Test* — Each pipe or tube with an outside diameter 1/8 in. (3 mm) and larger and with wall thickness of 0.015 in. (0.38 mm) and over shall be tested by the manufacturer to an internal hydrostatic pressure of 1000 psi (6.9 MPa) provided that the fiber stress calculated in accordance with the following equation does not exceed the allowable fiber stress, S, indicated below:

$$P = 2St/D$$

where:

P = hydrostatic test pressure, psi (or MPa)

S = allowable fiber stress, for material in the condition (temper) furnished as follows:

Annealed:	
5 in. (127 mm) outside diameter and under	17 500 psi (120 MPa)
Over 5 in. (127 mm) outside diameter	16 700 psi (115 MPa)
Stress-relieved:	
All sizes	21 200 psi (145 MPa)

t = minimum wall thickness, in. (or mm), equal to the specified nominal wall minus the permissible minus wall tolerance, or the specified minimum wall thickness

D = outside diameter of the pipe or tube, in. (or mm).

12.3.1 When so agreed upon between the manufacturer and purchaser, pipe or tube may be tested to $1\frac{1}{2}$ times the allowable fiber stress given above.

12.4 *Rounding Method* — For purposes of determining compliance with the specified limits for requirements of the properties listed in the following table, an observed value, or a calculated value, shall be rounded as indicated below, in accordance with the rounding method of Practice E 29:

Test	Rounded Unit for Observed or Calculated Value
Chemical composition and tolerances (when expressed in decimals)	nearest unit in the last right-hand place of figures of the specified limit. If two choices are possible, as when the digits dropped are exactly a 5 or a 5 followed only by zeros, choose the one ending in an even digit with zero defined as an even digit.
Tensile strength, Yield strength	nearest 1000 psi (6.9 MPa)
Elongation	nearest 1%

13. Inspection

13.1 Inspection of the material shall be agreed upon between the purchaser and the supplier as part of the purchase contract.

14. Rejection and Rehearing

14.1 Material that fails to conform to the requirements of this specification may be rejected. Rejection should be reported to the producer or supplier promptly and in writing. In case of dissatisfaction with the results of the test, the producer or supplier may make claim for a rehearing.

15. Certification

15.1 Certification shall be furnished to the purchaser that the material was manufactured, sampled, tested, and inspected in accordance with this specification and has been found to meet the requirements. When specified in the purchase order or contract, a report of the test results shall be furnished.

16. Product Marking

16.1 The following information shall be marked on the material or included on the package, or on a label or tag attached thereto: The name of the material or UNS number, heat number, condition (temper), this specification number, the size, gross, tare and net weight, consignor and consignee address, contract or order number, or such other information as may be defined in the contract or order.

APPENDICES

(Nonmandatory Information)

X2. CONDITIONS AND FINISHES NORMALLY SUPPLIED

X2.1 Scope

X2.1.1 This appendix lists the conditions and finishes in which pipe and tube (other than converter sizes) are normally supplied. These are subject to change, and the manufacturer should be consulted for the latest information available.

X2.2 Nickel-Copper Alloy (UNS N04400)

X2.2.1 *Annealed* — Soft, with a dull matte finish.

X2.2.2 *Stress-Relieved* — Thermally treated below the annealing temperature to relieve the major portion of the internal stresses, with a thin, light- to medium-dark surface.

SPECIFICATION FOR NICKEL-CHROMIUM-IRON ALLOYS (UNS N06600, N06601, N06603, N06690, N06693, N06025, AND N06045) AND NICKEL-CHROMIUM-COBALT-MOLYBDENUM ALLOY (UNS N06617) ROD, BAR, AND WIRE

SB-166

(Identical with ASTM Specification B 166-01 except for the deletion of the Supplementary Requirements for government procurement and addition of UNS N06617 heat treatment requirements. Certification has been made mandatory.)

1. Scope

1.1 This specification covers nickel-chromium-iron alloys (UNS N06600, N06601, N06603, N06690, N06693, N06025, and N06045) and nickel-chromium-cobalt-molybdenum alloy (UNS N06617) in the form of hot-finished and cold-worked rounds, squares, hexagons, rectangles, and cold-worked wire.

1.2 The values stated in inch-pound units are to be regarded as the standard. The values given in parentheses are for information only.

1.3 The following precautionary caveat pertains only to the test methods portion, Section 12, of this specification: *This standard does not purport to address all of the safety concerns, if any, associated with its use. It is the responsibility of the user of this standard to establish appropriate safety and health practices and determine the applicability of regulatory limitations prior to use.*

2. Referenced Documents

2.1 *ASTM Standards:*

B 168 Specification for Nickel-Chromium-Iron Alloys (UNS N06600, N06601, N06603, N06690, N06693, N06025, and N06045) and Nickel-Chromium-Cobalt-Molybdenum Alloy (UNS N06617) Plate, Sheet, and Strip

B 880 Specification for General Requirements for Chemical Check Analysis Limits for Nickel, Nickel Alloys and Cobalt Alloys

E 8 Test Methods for Tension Testing of Metallic Materials

E 18 Test Methods for Rockwell Hardness and Rockwell Superficial Hardness of Metallic Materials

E 29 Practice for Using Significant Digits in Test Data to Determine Conformance with Specifications

E 38 Methods for Chemical Analysis of Nickel-Chromium and Nickel-Chromium-Iron Alloys

E 140 Hardness Conversion Tables for Metal

E 527 Practice for Numbering Metals and Alloys (UNS)

E 1473 Test Methods for Chemical Analysis of Nickel, Cobalt, and High-Temperature Alloys

3. Terminology

3.1 *Definitions of Terms Specific to This Standard:*

3.1.1 *bar* — material of rectangular (flats), hexagonal, or square solid section up to and including 10 in. (254 mm) in width and $\frac{1}{8}$ in. (3.2 mm) and over in thickness in straight lengths.

3.1.2 *rod* — material of round solid section furnished in straight lengths.

DISCUSSION — Hot-worked rectangular bar in widths 10 in. and under may be furnished as hot-rolled plate with sheared or cut edges in accordance with Specification B 168, provided the mechanical property requirements of this specification are met.

3.1.3 *wire* — A cold-worked solid product of uniform round cross section along its whole length, supplied in coil form.

TABLE 1
CHEMICAL REQUIREMENTS

Element	Composition Limits, %							
	Alloy N06600	Alloy N06601	Alloy N06617	Alloy N06690	Alloy N06693	Alloy N06025	Alloy N06045	Alloy N06603
Nickel[A]	72.0 min	58.0–63.0	44.5 min	58.0 min	Bal.	remainder	45.0 min	Bal.
Chromium	14.0–17.0	21.0–25.0	20.0–24.0	27.0–31.0	27.0–31.0	24.0–26.0	26.0–29.0	24.0–26.0
Cobalt	...	...	10.0–15.0	...	...	...	...	...
Molybdenum	...	...	8.0–10.0	...	N/S	...	...	...
Iron	6.0–10.0	remainder	3.0 max	7.0–11.0	2.5–6.0	8.0–11.0	21.0–25.0	8.0–11.0
Manganese	1.0 max	1.0 max	1.0 max	0.5 max	1.0 max	0.15 max	1.0 max	0.15 max
Aluminum	...	1.0–1.7	0.8–1.5	...	2.5–4.0	1.8–2.4	...	2.4–3.0
Carbon	0.15 max	0.10 max	0.05–0.15	0.05 max	0.15 max	0.15–0.25	0.05–0.12	0.20–0.40
Copper	0.5 max	1.0 max	0.5 max	0.5 max	0.5 max	0.1 max	0.3 max	0.50 max
Silicon	0.5 max	0.5 max	1.0 max	0.5 max	0.5 max	0.5 max	2.5–3.0	0.50 max
Sulfur	0.015 max	0.015 max	0.015 max	0.015 max	0.01 max	0.010 max	0.010 max	0.010 max
Titanium	...	...	0.6 max	...	1.0 max	0.1–0.2	...	0.01–0.25
Phosphorus	...	...	...	...	...	0.020 max	0.020 max	0.20 max
Zirconium	...	...	...	...	...	0.01–0.10	...	0.01–0.10
Yttrium	...	...	...	...	...	0.05–0.12	...	0.01–0.15
Boron	...	...	0.006 max	...	...	...	...	...
Nitrogen	...	...	...	...	0.5–2.5	...	...	...
Niobium	...	...	...	...	...	...	...	...
Cerium	...	...	...	...	...	...	0.03–0.09	...

[A] Element shall be determined arithmetically by difference.

4. Ordering Information

4.1 It is the responsibility of the purchaser to specify all requirements that are necessary for the safe and satisfactory performance of material ordered under this specification. Examples of such requirements include, but are not limited to, the following:

4.1.1 *Alloy Name or UNS Number* — see Table 1,

4.1.2 *ASTM Designation,* including year of issue,

4.1.3 *Section* — Rod (round), bar (square, hexagonal, or rectangular), or wire (round),

4.1.4 *Condition* (see Table 2 and Table 3),

4.1.5 *Finish,*

4.1.6 *Dimensions,* including length (see Tables 4–8),

4.1.7 *Quantity* — feet or number of pieces,

4.1.8 *Certification* — Certification is required,

4.1.9 *Samples for Product (Check) Analysis*— State whether samples for product (check) analysis shall be furnished, and

4.1.10 *Purchaser Inspection* — If purchaser wishes to witness tests or inspection of material at place of manufacture, the purchase order must so state indicating which test or inspections are to be witnessed.

5. Chemical Composition

5.1 The material shall conform to the composition limits specified in Table 1.

5.2 If a product (check) analysis is performed by the purchaser, the material shall conform to the product (check) analysis variations in Specification B 880.

6. Mechanical Properties

6.1 *Mechanical Properties* — The material shall conform to the mechanical properties specified in Table 2 for rod and bar and Table 3 (UNS N06600 and N06690 only) for wire.

7. Dimensions and Permissible Variations

7.1 *Diameter, Thickness, or Width*— The permissible variations from the specified dimensions as measured on the diameter or between parallel surfaces of cold-worked rod and bar shall be as prescribed in Table 4; of hot-worked rod and bar as prescribed in Table 5; and of wire as prescribed in Table 6.

7.2 *Out-of-Round* — Hot-worked rods and cold-worked rods (except "forging quality") all sizes, in straight lengths, shall not be out-of-round by more than

TABLE 2
MECHANICAL PROPERTIES OF RODS AND BARS

Condition and Diameter or Distance Between Parallel Surfaces, in. (mm)	Tensile Strength, min, psi (MPa)	Yield Strength (0.2% offset), min, psi (MPa)	Elongation in 2 in. or 50 mm or 4*D*, min, %
UNS N06600:			
Cold-worked (as worked):			
Rounds:			
Under 1/2 (12.7)	120 000 (825)	90 000 (620)	7[A]
1/2 to 1 (12.7 to 25.4), incl	110 000 (760)	85 000 (585)	10
Over 1 to 2 1/2 (25.4 to 63.5), incl	105 000 (725)	80 000 (550)	12
Squares, hexagons, and rectangles:			
1/4 (6.4) and under	100 000 (690)	80 000 (550)	5[A]
Over 1/4 to 1/2 (6.4 to 12.7), excl	95 000 (655)	70 000 (480)	7
Hot worked (as worked):			
Rounds:			
1/4 to 1/2 (6.4 to 12.7), incl	95 000 (655)	45 000 (310)	20
Over 1/2 to 3 (12.7 to 76.2), incl	90 000 (620)	40 000 (275)	25
Over 3 (76.2)	85 000 (585)	35 000 (240)	30
Squares, hexagons, and rectangles:			
All sizes	85 000 (585)	35 000 (240)	20
Rings and disks[B]	—	—	—
Cold-worked (annealed) or hot-worked (annealed):			
Rods and bars, all sizes	80 000 (550)	35 000 (240)	30[A]
Rings and disks[C]	—	—	—
Forging Quality:			
All sizes	*D*	*D*	*D*
UNS N06601:			
Cold-worked (annealed) or hot-worked (annealed):			
All products, all sizes	80 000 (550)	30 000 (205)	30
Forging Quality:	*D*	*D*	*D*
UNS N06617:			
Cold-worked (annealed)[F] or hot-worked (annealed)[F]:			
All products, all sizes	95 000 (655)	35 000 (240)	35
Forging Quality:	*D*	*D*	*D*
UNS N06690:			
Cold-worked (as worked):			
Rounds:			
Under 1/2 (12.7)	120 000 (825)	90 000 (620)	7[A]
1/2 to 1 (12.7 to 25.4), incl	110 000 (760)	85 000 (585)	10
Over 1 to 2 1/2 (25.4 to 63.5), incl	105 000 (725)	80 000 (550)	12
Squares, hexagons, and rectangles:			
1/4 (6.4) and under	100 000 (690)	80 000 (550)	5[A]
Over 1/4 to 1/2 (6.4 to 12.7), excl	95 000 (655)	70 000 (480)	7
Hot worked (as worked):			
Rounds:			
1/4 to 1/2 (6.4 to 12.7), incl	95 000 (655)	45 000 (310)	20
Over 1/2 to 3 (12.7 to 76.2), incl	90 000 (620)	40 000 (275)	25
Over 3 (76.2)	85 000 (585)	35 000 (240)	30
Squares, hexagons, and rectangles:			
All sizes	85 000 (585)	35 000 (240)	20
Rings and disks[B]	—	—	—
Cold-worked (annealed) or hot-worked (annealed):			
Rods and bars, all sizes	85 000 (585)	35 000 (240)	30[A]
Rings and disks[C]	—	—	—
Forging Quality:			
All sizes	*D*	*D*	*D*

(continued)

TABLE 2
MECHANICAL PROPERTIES OF RODS AND BARS (CONT'D)

Condition and Diameter or Distance Between Parallel Surfaces, in. (mm)	Tensile Strength, min, psi (MPa)	Yield Strength (0.2% offset), min, psi (MPa)	Elongation in 2 in. or 50 mm or 4*D*, min, %
UNS N06603:			
Cold-worked (annealed) or hot-worked (annealed):			
All products, all sizes	94 000 (650)	43 000 (300)	25
Forging Quality:			
All sizes	[D]	[D]	[D]
UNS N06025:			
Cold-worked (annealed) or hot-worked (annealed):			
All products, all sizes	98 000 (680)	39 000 (270)	30
Forging quality:			
All sizes	[D]	[D]	[D]
UNS N06045:			
Cold-worked (annealed) or hot-worked (annealed):			
All products, all sizes	90 000 (620)	35 000 (240)	35
Hot-worked (Annealed):[E]			
Rods and bars, all sizes	75 000 (517)	30 000 (207)	30
Forging Quality:			
All sizes	[D]	[D]	[D]

[A] Not applicable to diameters or cross sections under $^3/_{32}$ in. (2.4 mm).
[B] Hardness B75 to B100, or equivalent.
[C] Hardness B75 to B95, or equivalent.
[D] Forging quality is furnished to chemical requirements and surface inspection only. No mechanical properties are required.
[E] High-temperature annealed condition.
[F] Solution anneal is done at 2100°F–2250°F and quenched in water or rapidly cooled by other means.

TABLE 3
MECHANICAL PROPERTIES OF COLD-WORKED WIRE IN COIL
(Alloys N06600 and N06690 only)[A]

Condition and Size, in. (mm)	Tensile Strength, psi (MPa) Min.	Tensile Strength, psi (MPa) Max.	Wrapping Test
Annealed			
Under 0.032 (0.81)	80 000 (552)	115 000 (793)	The wire shall be wrapped eight consecutive turns in a closed helix (pitch approximately equal to the diameter of the wire) around a mandrel as follows:
0.032 (0.81) and over	80 000 (552)	105 000 (724)	
Cold-worked, regular temper, all sizes	120 000 (827)		
Cold-worked, spring temper		165 000 (1138)	(1) For all annealed and regular temper wire and for spring temper wire 0.229 in. (5.82 mm) and less: Same as diameter of wire.
Up to 0.057 (1.45), incl	185 000 (1276)	...	
Over 0.057 (1.45) to 0.114 (2.90), incl	175 000 (1207)	...	
Over 0.114 (2.90) to 0.229 (5.82), incl	170 000 (1172)	...	(2) For spring temper wire over 0.229 in. (5.82 mm): Twice the diameter of wire.
Over 0.229 (5.82) to 0.329 (8.36), incl	165 000 (1138)	...	
Over 0.329 (8.36) to 0.375 (9.53), incl	160 000 (1103)	...	The wire shall withstand the wrapping test without fracture or development of a pebbled or orange-peel surface.
Over 0.375 (9.53) to 0.500 (12.7), incl	155 000 (1069)	...	
Over 0.500 (12.7) to 0.563 (14.3), incl	140 000 (965)	...	

[A] Properties are not applicable to wire after straightening and cutting.

TABLE 4
PERMISSIBLE VARIATIONS IN DIAMETER OR DISTANCE BETWEEN PARALLEL SURFACES OF COLD-WORKED ROD AND BAR

Specified Dimension, in. (mm)[A]	Permissible Variations From Specified Dimension, in. (mm) +	–
Rounds:		
1/16 (1.6) to 3/16 (4.8), excl	0	0.002 (0.05)
3/16 (4.8) to 1/2 (12.7), excl	0	0.003 (0.08)
1/2 (12.7) to 15/16 (23.8), incl	0.001 (0.03)	0.002 (0.05)
Over 15/16 (23.8) to 1 15/16 (49.2), incl	0.0015 (0.04)	0.003 (0.08)
Over 1 15/16 (49.2) to 2 1/2 (63.5), incl	0.002 (0.05)	0.004 (0.10)
Hexagons, squares, rectangles:		
1/2 (12.7) and less	0	0.004 (0.10)
Over 1/2 (12.7) to 7/8 (22.2), incl	0	0.005 (0.13)
Over 7/8 (22.2) to 1 1/4 (31.8), incl	0	0.007 (0.18)
Over 1 1/4 (31.8) to 2 (50.8), incl	0	0.009 (0.23)

[A] Dimensions apply to diameter of rounds, to distance between parallel surfaces of hexagons and squares, and separately to width and thickness of rectangles.

TABLE 5
PERMISSIBLE VARIATIONS IN DIAMETER OR DISTANCE BETWEEN PARALLEL SURFACES OF HOT-WORKED ROD AND BAR

Specified Dimension, in. (mm)[A]	Permissible Variations From Specified Dimension, in. (mm) +	–
Rod and bar, hot-worked:		
1 (25.4) and under	0.016 (0.41)	0.016 (0.41)
Over 1 (25.4) to 2 (50.8), incl	0.031 (0.79)	0.016 (0.41)
Over 2 (50.8) to 4 (101.6), incl	0.047 (1.19)	0.031 (0.79)
Over 4 (101.6)	0.125 (3.18)	0.063 (1.60)
Rod, rough-turned or ground:		
Under 1 (25.4)	0.005 (0.13)	0.005 (0.13)
1 (25.4) and over	0.031 (0.79)	0
Forging quality rod:[B]		
Under 1 (25.4)	0.005 (0.13)	0.005 (0.13)
1 (25.4) and over	0.031 (0.79)	0

[A] Dimensions apply to diameter of rods, to distance between parallel surfaces of hexagons and squares, and separately to width and thickness of rectangles.

[B] Spot grinding is permitted to remove minor surface imperfections. The depth of these spot ground areas shall not exceed 3% of the diameter of the rod.

one half the total permissible variations in diameter shown in Table 4 and Table 5, except for hot-worked rods 1/2 in. (12.7 mm) in diameter and under, which may be out-of-round by the total permissible variations in diameter shown in Table 5. Cold-worked wire shall not be out-of-round by more than one-half the total permissible variations in diameter shown in Table 6.

7.3 *Corners* — Cold-worked bars will have practically exact angles and sharp corners.

7.4 *Machining Allowances for Hot-Worked Materials* — When the surfaces of hot-worked products are to be machined, the allowances prescribed in Table 7 are recommended for normal machining operations.

7.5 *Length* — The permissible variations in length of cold-worked and hot-worked rod and bar shall be as prescribed in Table 8.

7.5.1 Rods and bars ordered to random or nominal lengths will be furnished with either cropped or saw-cut ends; material ordered to cut lengths will be furnished with square saw-cut or machined ends.

7.6 *Straightness* — The permissible variations in straightness of cold-worked rod and bar as determined by the departure from straightness shall be as prescribed in Table 9.

7.6.1 The permissible variations in straightness of hot-worked rod and bar as determined by the departure from straightness shall be as specified in Table 10.

8. Workmanship, Finish, and Appearance

8.1 The material shall be uniform in quality and condition, smooth, commercially straight or flat, and free of injurious imperfections.

9. Sampling

9.1 *Lot — Definition:*

9.1.1 A lot for chemical analysis shall consist of one heat.

9.1.2 A lot for mechanical properties testing shall consist of all material from the same heat, nominal diameter or thickness, and condition.

9.1.2.1 Where material cannot be identified by heat, a lot shall consist of not more than 500 lb (227 kg) of material in the same size and condition.

9.2 *Test Material Selection:*

9.2.1 *Chemical Analysis* — Representative samples from each lot shall be taken during pouring or subsequent processing.

TABLE 6
PERMISSIBLE VARIATIONS IN DIAMETER OF COLD-WORKED WIRE

Diameter, in. (mm)	Permissible Variations, in. (mm) + or −
Up to 0.0044 (0.112), incl	0.0002 (0.005)
Over 0.0044 (0.112) to 0.0079 (0.201), incl	0.00025 (0.006)
Over 0.0079 (0.201) to 0.0149 (0.378), incl	0.0003 (0.008)
Over 0.0149 (0.378) to 0.0199 (0.505), incl	0.0004 (0.010)
Over 0.0199 (0.505) to 0.031 (0.79), incl	0.0005 (0.013)
Over 0.031 (0.79) to 0.045 (1.14), incl	0.0006 (0.015)
Over 0.045 (1.14) to 0.079 (2.01), incl	0.0007 (0.018)
Over 0.079 (2.01) to 0.1875 (4.76), incl	0.001 (0.025)
Over 0.1875 (4.76) to 0.3125 (7.93), incl	0.002 (0.051)
Over 0.3125 (7.93) to 0.563 (14.3), incl	0.003 (0.076)

TABLE 7
NORMAL MACHINING ALLOWANCES FOR HOT-WORKED MATERIAL

Finished-Machined Dimensions for Finishes as Indicated Below, in. (mm)[A]	Normal Machining Allowance, in. (mm)			
	On Diameter, for Rods	Distance Between Parallel Surfaces for Hexagonal and Square Bar	For Rectangular Bar	
			On Thickness	On Width
Hot-Worked:[B]				
Up to 7/8 (22.2), incl	1/8 (3.2)	1/8 (3.2)	1/8 (3.2)	3/16 (4.8)
Over 7/8 to 1 7/8 (22.2 to 47.6), incl	1/8 (3.2)	3/16 (4.8)	1/8 (3.2)	3/16 (4.8)
Over 1 7/8 to 2 7/8 (47.6 to 73.0), incl	3/16 (4.8)	1/4 (6.4)	...	3/16 (4.8)
Over 2 7/8 to 3 13/16 (73.0 to 96.8), incl	1/4 (6.4)	...	...	3/16 (4.8)
Over 3 13/16 (96.8)	1/4 (6.4)	...	...	3/8 (9.5)
Hot-Worked Rods:				
Rough-Turned or Rough-Ground:[C]				
15/16 to 4 (23.8 to 101.6), incl in diameter	1/16 (1.6)	...	...	...
Over 4 to 12 (101.6 to 304.8), incl in diameter	1/8 (3.2)	...	...	...

[A] Dimensions apply to diameter of rods, to distance between parallel surfaces of hexagonal and square bar, and separately to width and thickness of rectangular bar.

[B] The allowances for hot-worked material in Table 5 are recommended for rods machined in lengths of 3 ft (0.91 m) or less and for bars machined in lengths of 2 ft (0.61 m) or less. Hot-worked material to be machined in longer lengths should be specified showing the finished cross-sectional dimension and the length in which the material will be machined in order that the manufacturer may supply material with sufficient oversize, including allowance for out-of-straightness.

[C] Applicable to 3 ft (0.91 m) max length.

9.2.1.1 Product (check) analysis shall be wholly the responsibility of the purchaser.

9.2.2 *Mechanical Properties* — Samples of the material to provide test specimens for mechanical properties shall be taken from such locations in each lot as to be representative of that lot.

10. Number of Tests

10.1 *Chemical Analysis* — One test per lot.

10.2 *Tension* — One test per lot.

10.3 *Hardness* — One test per lot.

11. Specimen Preparation

11.1 Tension test specimens shall be taken from material in the final condition and tested in the direction of fabrication.

11.1.1 All rod, bar, and wire shall be tested in full cross-section size when possible. When a full cross-section size test cannot be performed, the largest possible round specimen shown in Test Methods E 8 shall be used. Longitudinal strip specimens shall be prepared in accordance with Test Methods E 8 for rectangular bar up to ½ in. (12.7 mm), inclusive, in thicknesses that are too wide to be pulled full size.

TABLE 8
PERMISSIBLE VARIATIONS IN LENGTH OF RODS AND BARS

Random mill lengths:	
Hot-worked	6 to 24 ft (1.83 to 7.31 m) long with not more than 25 weight % between 6 and 9 ft (1.83 and 2.74 m).[A]
Cold-worked	6 to 20 ft (1.83 to 6.1 m) long with not more than 25 weight % between 6 and 10 ft (1.83 and 3.05 m).
Multiple lengths	Furnished in multiples of a specified unit length, within the length limits indicated above. For each multiple, an allowance of ¼ in. (6.4 mm) will be made for cutting, unless otherwise specified. At the manufacturer's option, individual specified unit lengths may be furnished.
Nominal lengths	Specified nominal lengths having a range of not less than 2 ft (610 mm) with no short lengths allowed.[B]
Cut lengths	A specified length to which all rods and bars will be cut with a permissible variation of plus ⅛ in. (3.2 mm), minus 0 for sizes 8 in. (203 mm) and less in diameter or distance between parallel surfaces. For larger sizes, the permissible variation shall be +¼ in. (6.4 mm), − 0.

[A] For hot-worked sections weighing over 25 lb/ft (37 kg/m) and for smooth-forged products, all sections, short lengths down to 2 ft (610 mm) may be furnished.

[B] For cold-worked rods and bars under ½ in. (12.7 mm) in diameter or distance between parallel surfaces ordered to nominal or stock lengths with a 2-ft (610-mm) range, at least 93% of such material shall be within the range specified; the balance may be in shorter lengths but in no case shall lengths less than 4 ft (1220 mm) be furnished.

TABLE 9
PERMISSIBLE VARIATIONS IN STRAIGHTNESS OF COLD-WORKED RODS AND BARS

Specified Diameter or Distance Between Parallel Surfaces, in. (mm)[A]	Permissible Variations in Lengths Indicated, in. (mm)
Rounds:	Depth of Chord:
½ (12.7) to 2½ (63.5), incl.	0.030 (0.76) per ft (305 mm) of length
Hexagons, squares, rectangles:	0.030 (0.76) per ft (305 mm)
½ (12.7) to 2 (50.8), incl	of length

[A] Material under ½ in. (12.7 mm) shall be reasonably straight and free of sharp bends and kinks.

TABLE 10
PERMISSIBLE VARIATIONS IN STRAIGHTNESS OF HOT-WORKED RODS AND BARS[A]

Finish	Permissible Variations in./ft (mm/m)[B]
Rods and bars, hot-worked	0.050 (4.2)[C]
Rounds hot-worked, rough-ground, or rough-turned	0.050 (4.2)[C]

[A] Not applicable to forging quality.

[B] Material under ½ in. (12.7 mm) shall be reasonably straight and free of sharp bends and kinks.

[C] The maximum curvature (depth of chord) shall not exceed the values indicated multiplied by the length in feet.

11.2 Hardness test specimens shall be taken from material in the final condition.

NOTE 1 — In order that the hardness determinations may be in reasonably close agreement, the following procedure is suggested as follows:

(1) For rod, under ½ in. (12.7 mm) in diameter, hardness readings shall be taken on a flat surface prepared by filing or grinding approximately 1/16 in. (1.6 mm) from the outside surface of the rod.

(2) For rod, ½ in. in diameter and larger, and for hexagonal, square, and rectangular bar, all sizes, hardness readings shall be taken on a cross section midway between the surface and center of the section.

12. Test Methods

12.1 The chemical composition, mechanical, and other properties of the material as enumerated in this specification shall be determined, in case of disagreement, in accordance with the following methods:

Test	ASTM Designation
Chemical analysis	E 38,[A] E 1473
Tension	E 8
Rockwell hardness	E 18
Hardness conversion	E 140
Rounding procedure	E 29

[A] Methods E 38 are to be used only for elements not covered by Test Methods E 1473.

12.2 For purposes of determining compliance with the specified limits for requirements of the properties listed in the following table, an observed value or a calcu-

lated value shall be rounded in accordance with the rounding method of Practice E 29 as follows:

Test	Rounded Unit for Observed or Calculated Value
Chemical composition, hardness, and tolerances (when expressed in decimals)	Nearest unit in the last right-hand place of figures of the specified limit. If two choices are possible, as when the digits dropped are exactly a 5, or a 5 followed only by zeros, choose the one ending in an even digit, with zero defined as an even digit.
Tensile strength and yield strength	Nearest 1000 psi (6.9 MPa)
Elongation	Nearest 1%

13. Inspection

13.1 Inspection of the material shall be made as agreed upon between the manufacturer and the purchaser as part of the purchase contract.

14. Rejection and Rehearing

14.1 Material that fails to conform to the requirements of this specification may be rejected. Rejection should be reported to the producer or supplier promptly and in writing. In case of dissatisfaction with the results of the test, the producer or supplier may make claim for a rehearing.

15. Certification

15.1 A manufacturer's certification shall be furnished to the purchaser stating that material has been manufactured, tested, and inspected in accordance with this specification, and that the test results on representative samples meet specification requirements. A report of the test results shall be furnished.

16. Product Marking

16.1 The following shall be marked on the material or included on the package, or on a label or tag attached thereto: the name of the material or UNS Number, heat number, condition (temper), this specification number, the size, gross, tare, and net weight, consignor and consignee address, contract or order number, or such other information as may be defined in the contract or order.

SUPPLEMENTARY REQUIREMENTS

SUPPLEMENTARY REQUIREMENTS FOR SPECIAL END USES

S1. Special End Uses

S1.1 When material is intended for nuclear applications or other critical end uses, or when any special requirements are to apply, the manufacturer shall be notified at the time of placement of the inquiry or order to determine if material of quality and inspection procedures normally employed for commercial material to this specification is adequate. In the event that more critical quality or more rigid inspection standards than those called out in this specification are indicated, the manufacturer and the purchaser shall agree upon such standards prior to production.

APPENDIX

(Nonmandatory Information)

X1. PROCURABLE CONDITIONS AND FINISHES

X1.1 The various conditions and finishes in which rod and bar are procurable are as follows:

X1.1.1 *Hot-Worked* — With a tightly adherent, dark oxide surface.

X1.1.2 *Hot-Worked, Rough-Ground* — Similar to X1.1.1 except rough-ground.

X1.1.3 *Hot-Worked, Rough-Turned* — Similar to X1.1.1 except rough-turned with a broad-nosed tool similar to a bar peeling operation and thus may not be straight. Intended generally for machining where an overhauled surface is desired, essentially for machined step down shafts or parts machined in short lengths of 3 ft (0.91 m) or less.

X1.1.4 *Hot-Worked, Forging Quality* — Rough-turned and spot-ground, as necessary, for sizes 1 in. (25.4 mm) in diameter and over; rough ground and spot ground for sizes under 1 in. in diameter. Material is selected from heats of known, good hot malleability.

NOTE X1.1—For sizes 2½ in. (63.5 mm) in diameter and less, cold-worked rod may be used also for forging by virtue of the fact that such rod has been overhauled for removal of mechanical surface defects prior to cold-working. In such cases, the user should run pilot forging tests to ensure himself that such material has the desired hot malleability range.

X1.1.5 *Hot-Worked, Annealed* — Soft, with a tightly adherent dark oxide.

X1.1.6 *Hot-Worked, Annealed, and Pickled* — Same as X1.1.5 except descaled for removal of mill oxide. Provides for better surface inspection than does hot-worked material and often employed where welding is involved where removal of mill oxide is desired.

NOTE X1.2 — Annealing prior to pickling may be required in order to reduce the mill oxide since uniform pickling of an unreduced oxide is difficult.

X1.1.7 *Cold-Worked, As Worked*— Hot-worked, overhauled, cold-worked, and straightened with a smooth, bright finish.

X1.1.8 *Cold-Worked, Annealed, and Pickled*— Hot-worked, overhauled, cold-worked, annealed, descaled, and straightened. Annealed for softness and with a dull matte finish.

SPECIFICATION FOR NICKEL-CHROMIUM-IRON ALLOYS (UNS N06600, N06601, N06603, N06690, N06693, N06025, AND N06045) AND NICKEL-CHROMIUM-COBALT-MOLYBDENUM ALLOY (UNS N06617) SEAMLESS PIPE AND TUBE

SB-167

(Identical with ASTM Specification B 167-01 except for the deletion of the Supplementary Requirements for government procurement, the deletion of Appendix X1, and the addition of UNS N06617 heat treatment requirements. Certification has been made mandatory.)

1. Scope

1.1 This specification covers nickel-chromium-iron alloys (UNS N06600, N06601, N06603, N06690, N06693, N06025, and N06045) and nickel-chromium-cobalt-molybdenum alloy (UNS N06617) in cold-worked annealed, hot-worked annealed, and hot-finished seamless pipe and tube intended for general corrosion resistant and heat resistant applications.

1.2 The values stated in inch-pound units are to be regarded as the standard. The values given in parentheses are for information only.

1.3 The following safety hazards caveat pertains only to the test methods portion, Section 12, of this specification: *This standard does not purport to address all of the safety concerns, if any, associated with its use. It is the responsibility of the user of this standard to establish appropriate safety and health practices and determine the applicability of regulatory limitations prior to use.*

2. Referenced Documents

2.1 *ASTM Standards:*

B 880 Specification for General Requirements for Chemical Check Analysis Limits for Nickel, Nickel Alloys and Cobalt Alloys

E 8 Test Methods for Tension Testing of Metallic Materials

E 29 Practice for Using Significant Digits in Test Data to Determine Conformance with Specifications

E 38 Methods for Chemical Analysis of Nickel-Chromium and Nickel-Chromium-Iron Alloys

E 1473 Test Methods for Chemical Analysis of Nickel, Cobalt, and High-Temperature Alloys

3. Terminology

3.1 *Definitions of Terms Specific to This Standard:*

3.1.1 *average diameter* — the average of the maximum and minimum outside diameters, as determined at any one cross section of the pipe or tube.

3.1.2 *pipe* — tube conforming to the particular dimensions commercially known as pipe sizes. See Table X2.1.

3.1.3 *seamless pipe or tube* — a pipe or tube produced with a continuous periphery in all stages of the operations.

3.1.4 *tube* — a hollow product of round or any other cross section having a continuous periphery.

4. Ordering Information

4.1 It is the responsibility of the purchaser to specify all requirements that are necessary for the safe and satisfactory performance of material ordered under this specification. Examples of such requirements include, but are not limited to, the following:

4.1.1 *Alloy Name or UNS Number* — see Table 1,

TABLE 1
CHEMICAL REQUIREMENTS

Element	Composition Limits, %							
	Alloy N06600	Alloy N06601	Alloy N06617	Alloy N06690	Alloy N06693	Alloy N06025	Alloy N06045	Alloy N06603
Nickel[A]	72.0 min	58.0–63.0	44.5 min	58.0 min	remainder	remainder	45.0 min	remainder
Chromium	14.0–17.0	21.0–25.0	20.0–24.0	27.0–31.0	27.0–31.0	24.0–26.0	26.0–29.0	24.0–26.0
Iron	6.0–10.0	remainder	3.0 max	7.0–11.0	2.5–6.0	8.0–11.0	21.0–25.0	8.0–11.0
Manganese	1.0 max	1.5 max	1.0 max	0.5 max	1.0 max	0.15 max	1.0 max	0.15 max
Molybdenum	...	...	8.0–10.0	...	N/S	...	...	...
Cobalt	...	...	10.0–15.0	...	...	...	...	...
Aluminum	...	1.0–1.7	0.8–1.5	...	2.5–4.0	1.8–2.4	...	2.4–3.0
Carbon	0.15 max	0.10 max	0.05–0.15	0.05 max	0.15 max	0.15–0.25	0.05–0.12	0.20–0.40
Copper	0.5 max	1.0 max	0.5 max	0.5 max	0.5 max	0.1 max	0.3 max	0.50 max
Boron	...	...	0.006 max	...	...	...	...	...
Silicon	0.5 max	0.5 max	1.0 max	0.5 max	0.5 max	0.5 max	2.5–3.0	0.50 max
Sulfur	0.015 max	0.015 max	0.015 max	0.015 max	0.01 max	0.010 max	0.010 max	0.010 max
Titanium	...	...	0.6 max	...	1.0 max	0.1–0.2	...	0.1–0.25
Niobium	...	...	...	...	0.5–2.5	...	...	...
Phosphorus	...	...	...	...	...	0.020 max	0.020 max	0.020 max
Zirconium	...	...	...	...	...	0.01–0.10	...	0.01–0.10
Yttrium	...	...	...	...	...	0.05–0.12	...	0.01–0.15
Cerium	...	...	...	...	...	...	0.03–0.09	...

[A] Element shall be determined arithmetically by difference.

4.1.2 *ASTM Designation,* including year of issue,

4.1.3 *Condition* (see Appendix X3),

4.1.4 *Finish* (see Appendix X3),

4.1.5 *Dimensions:*

4.1.5.1 *Tube* — Specify outside diameter and nominal or minimum wall,

4.1.5.2 *Pipe* — Specify standard pipe size and schedule,

4.1.5.3 *Length* — Cut to length or random,

4.1.6 *Quantity* — Feet or number of pieces,

4.1.7 *Hydrostatic Pressure Requirements* — Specify test pressure if other than required by 12.3.1,

4.1.8 *Certification* — Certification is required (Section 15),

4.1.9 *Samples for Product (Check) Analysis* — State whether samples for product (check) analysis should be furnished (see 5.2),

4.1.10 *Purchaser Inspection* — If purchaser wishes to witness tests or inspection of material at place of manufacture, the purchase order must so state indicating which tests or inspections are to be witnessed (Section 13), and

4.1.11 *Small-Diameter and Light-Wall Tube*

5. Chemical Composition

5.1 The material shall conform to the composition limits specified in Table 1.

5.2 If a product (check) analysis is performed by the purchaser, the material shall conform to the product (check) analysis variations in Specification B 880.

6. Mechanical Properties and Other Requirements

6.1 *Tensile Test* — The material shall conform to the tensile properties specified in Table 2.

6.2 *Hydrostatic Test* — If any pipe or tube shows leaks during hydrostatic testing, it shall be rejected.

7. Dimensions and Permissible Variations

7.1 *Diameter and Wall Thickness* — The permissible variations in the outside diameter and wall thickness shall conform to the permissible variations prescribed in Table 3 or Table 4, as applicable.

7.2 *Length* — When material is ordered cut-to-length, the length shall conform to the permissible variations prescribed in Table 5.

TABLE 2
MECHANICAL PROPERTIES

Condition and Size	Tensile Strength, Min. psi (MPa)	Yield Strength (0.2% Offset), Min., psi (MPa)	Elongation in 2 in. or 50 mm or 4*D*, Min., %
UNS N06600:			
Hot-worked or hot-worked annealed:			
5 in. (127 mm) in outside diameter and under	80,000 (550)	30,000 (205)	35
Over 5 in. (127 mm) in outside diameter	75,000 (515)	25,000 (170)	35
Cold-worked annealed:			
5 in. (127 mm) in outside diameter and under	80,000 (550)	35,000 (240)	30
Over 5 in. (127 mm) in outside diameter	80,000 (550)	30,000 (205)	35
UNS N06601:			
Cold-worked annealed or hot-worked annealed (all sizes)	80,000 (550)	30,000 (205)	30
UNS N06617:			
Cold-worked annealed[A] or hot-worked annealed[A] (all sizes)	95,000 (665)	35,000 (240)	35
UNS N06690:			
Hot-worked or hot-worked annealed:			
5 in. (127 mm) in outside diameter and under	85,000 (586)	30,000 (205)	35
Over 5 in. (127 mm) in outside diameter	75,000 (515)	25,000 (170)	35
Cold-worked annealed:			
5 in. (127 mm) in outside diameter and under	85,000 (586)	35,000 (240)	30
Over 5 in. (127 mm) in outside diameter	85,000 (586)	30,000 (205)	35
UNS N06693:			
Cold-worked annealed or hot-worked annealed			
5 in. (127 mm) in outside diameter and under	85,000 (586)	40,000 (275)	30
UNS N06603:			
Hot-worked annealed or cold-worked annealed (all sizes)	94,000 (650)	43,000 (300)	25
UNS N06025:			
Hot-worked annealed or cold-worked annealed (all sizes)	98,000 (680)	39,000 (270)	30
UNS N06045:			
Hot-worked annealed or cold-worked annealed (all sizes)	90,000 (620)	35,000 (240)	35

[A] Solution anneal is done at 2,100°F–2,250°F and quenched in water or rapidly cooled by other means.

7.3 *Straightness* — Material shall be reasonably straight and free of bends and kinks.

7.4 *Ends* — Ends shall be plain cut and deburred.

8. Workmanship, Finish, and Appearance

8.1 The material shall be uniform in quality and temper, smooth, commercially straight, and free of injurious imperfections.

9. Sampling

9.1 *Lot Definition:*

9.1.1 A lot for chemical analysis shall consist of one heat.

9.1.2 A lot for all other testing shall consist of all material from the same heat, nominal size (excepting length), and condition.

9.1.2.1 Where material cannot be identified by heat, a lot shall consist of not more than 500 lb (227 kg) of material in the same condition and nominal size (excepting length).

9.2 *Test Material Selection:*

9.2.1 *Chemical Analysis* — Representative samples from each lot shall be taken during pouring or subsequent processing.

9.2.1.1 Product (check) analysis shall be wholly the responsibility of the purchaser.

TABLE 3
PERMISSIBLE VARIATIONS FOR OUTSIDE DIAMETER AND WALL THICKNESS OF SEAMLESS COLD-WORKED PIPE AND TUBE[A, B]

Nominal Outside Diameter, in. (mm)	Permissible Variations					
	Outside Diameter, in. (mm)		% of Thickness of Specified Nominal Wall		% of Thickness of Specified Minimum Wall	
	+	−	+	−	+	−
Over 0.400 (10) to 5/8 (16), excl.	0.005 (0.13)	0.005 (0.13)	15.0	15.0	30	0
5/8 (16) to 1 1/2 (38), incl.	0.0075 (0.19)	0.0075 (0.19)	10.0	10.0	22	0
Over 1 1/2 (38) to 3 (76), incl.	0.010 (0.25)	0.010 (0.25)	10.0	10.0	22	0
Over 3 (76) to 4 1/2 (114), incl.	0.015 (0.38)	0.015 (0.38)	10.0	10.0	22	0
Over 4 1/2 (114) to 6 (152), incl.	0.020 (0.51)	0.020 (0.51)	12.5	12.5	28	0
Over 6 (152) to 6 5/8 (168), incl.	0.025 (0.64)	0.025 (0.64)	12.5	12.5	28	0

[A] *Ovality* — The permissible variations in this Table apply to individual measurements, including out-of-roundness (ovality) except for the following: For pipe and tube having a nominal wall thickness of 3% or less of the nominal outside diameter, the mean outside diameter shall conform to the permissible variations of this Table and individual measurements (including ovality) shall conform to the plus and minus values of the Table, with the values increased by 0.5% of the nominal outside diameter. For pipe over 4 1/2 in. (114 mm) in outside diameter with a nominal wall thickness greater than 3% of the nominal outside diameter, the mean outside diameter shall conform to the permissible variations of this Table and individual measurements shall not exceed twice the permissible variations of the Table.

[B] *Eccentricity* — The permissible variations in this Table apply to individual measurements including eccentricity.

TABLE 4
PERMISSIBLE VARIATIONS FOR OUTSIDE DIAMETER AND WALL THICKNESS OF SEAMLESS HOT-WORKED PIPE AND TUBE[A, B]

Nominal Outside Diameter, in. (mm)	Permissible Variations					
	Outside Diameter, in. (mm)		% of Thickness of Specified Nominal Wall		% of Thickness of Specified Minimal Wall	
	+	−	+	−	+	−
2 1/2 (64) to 4 1/2 (114), incl	0.031 (0.79)	0.031 (0.79)	16.0	12.5	28.5	0
Over 4 1/2 (114) to 6 1/2 (165), incl	0.047 (1.2)	0.047 (1.2)	16.0	12.5	28.5	0
Over 6 1/2 (165) to 9 1/4 (235),incl	0.062 (1.6)	0.062 (1.6)	16.0	12.5	28.5	0

[A] *Ovality* — Tube 5 in. (127 mm) and under in outside diameter the tolerance on the outside diameter applies for individual measurements and includes ovality. Tube over 5 in. (127 mm) in outside diameter the mean outside diameter shall conform to the permissible variations of this Table and individual measurements shall not exceed twice the permissible variations of this Table.

[B] *Eccentricity* — The permissible variations in the above Table apply to individual measurements including eccentricity.

9.2.2 *Mechanical and Other Properties* — Samples of the material to provide test specimens for mechanical and other properties shall be taken from such locations in each lot as to be representative of that lot. Test specimens shall be taken from material in the final condition.

10. Number of Tests

10.1 *Chemical Analysis* — One test per lot.

10.2 *Tension* — One test per lot.

10.3 *Hydrostatic* — Each piece in each lot.

11. Specimen Preparation

11.1 *Room-Temperature Tension Specimen* — Material shall be tested in the direction of fabrication. Whenever possible, all pipe and tube shall be tested in full

TABLE 5
PERMISSIBLE VARIATIONS IN LENGTH[A]

Outside Diameter, in. (mm)	Cut Length, in. (mm)	
	Over	Under
Under 2 (50.8)	1/8 (3.2)	0
2 (50.8) and over	3/16 (4.8)	0

[A] These permissible variations in length apply to pipe or tube in straight lengths. They apply to cut lengths up to and including 24 ft (7.3 m). For lengths over 24 ft, an additional over-tolerance of 1/8 in. (3.2 mm) for each 10 ft (3 m) or fraction thereof shall be permissible up to a maximum additional over-tolerance of 1/2 in. (12.7 mm).

tubular size. When testing in full tubular size is not possible, longitudinal strip specimens, or the largest possible round specimen, shall be used. In the event of disagreement when full tubular testing is not possible, a longitudinal strip specimen with reduced gage length as contained in Test Methods E 8 shall be used.

12. Test Methods

12.1 *Chemical Composition* — In case of disagreement, the chemical composition shall be determined in accordance with Test Methods E 1473 or Methods E 38. Methods E 38 is to be used only for elements not covered by Test Methods E 1473.

12.2 *Tension Test* — Tension testing shall be conducted in accordance with Test Methods E 8.

12.3 *Hydrostatic Test* — Each pipe or tube with an outside diameter 1/8 in. (3 mm) and larger and with wall thickness of 0.015 in. (0.38 mm) and over shall be tested by the manufacturer to an internal hydrostatic pressure of 1000 psi (6.9 MPa) provided that the fiber stress calculated in accordance with the following equation does not exceed the allowable fiber stress, S, indicated below:

$$P = 2St/D \quad (1)$$

where:

P = hydrostatic test pressure, psi (or MPa)
S = allowable fiber stress, for material in the condition (temper) furnished as follows:

Hot-worked or hot-worked annealed:	
UNS N06600	20 000 (140 MPa)
UNS N06601	20 000 (140 MPa)
UNS N06603	24 000 (165 MPa)
UNS N06617	23 700 (163 MPa)
UNS N06690	21 200 (146 MPa)
UNS N06693	21 200 (146 MPa)
UNS N06025	24 000 (165 MPa)
UNS N06045	22 500 (155 MPa)
Over 5 in. outside diameter:	
UNS N06600	16 700 (115 MPa)
UNS N06690	16 700 (115 MPa)
Cold-worked annealed — All sizes:	
UNS N06600	20 000 (140 MPa)
UNS N06601	20 000 (140 MPa)
UNS N06690	21 200 (146 MPa)
UNS N06693	21 200 (146 MPa)
UNS N06025	24 500 (169 MPa)
UNS N06045	22 500 (155 MPa)

t = minimum wall thickness, in. (or mm), equal to the specified nominal wall minus the permissible minus wall tolerance, or the specified minimum wall thickness, and,
D = outside diameter of the pipe or tube, in. (or mm).

12.3.1 When so agreed upon between the manufacturer and purchaser, pipe or tube may be tested to 1 1/2 times the allowable fiber stress given above.

12.4 *Rounding Method* — For purposes of determining compliance with the specified limits for requirements of the properties listed in the following table, an observed value, or a calculated value, shall be rounded as indicated below, in accordance with the rounding method of Practice E 29:

Test	Rounded Unit for Observed or Calculated Value
Chemical composition and tolerances (when expressed in decimals)	Nearest unit in the last right-hand place of figures of the specified limit. If two choices are possible, as when the digits dropped are exactly a 5, or a 5 followed only by zeros, choose the one ending in an even digit with zero defined as an even digit.
Tensile strength, yield strength	Nearest 1000 psi (6.9 MPa)
Elongation	Nearest 1%

13. Inspection

13.1 Inspection of the material shall be agreed upon between the purchaser and the supplier as part of the purchase contract.

14. Rejection and Rehearing

14.1 Material that fails to conform to the requirements of this specification may be rejected. Rejection should be reported to the producer or supplier promptly and in writing. In case of dissatisfaction with the results of the test, the producer or supplier may make claim for a rehearing.

15. Certification

15.1 A manufacturer's certification shall be furnished to the purchaser stating that material has been manufactured, tested, and inspected in accordance with this specification, and that the test results on representative samples meet specification requirements. A report of the test results shall be furnished.

16. Product Marking

16.1 The following information shall be marked on the material or included on the package, or on a label or tag attached thereto: The name of the material or UNS number, heat number, condition (temper), this specification number, the size, gross, tare and net weight, consignor and consignee address, contract or order number, or such other information as may be defined in the contract or order.

APPENDIXES

(Nonmandatory Information)

X1. DELETED

X2. PIPE SCHEDULES

X2.1 The schedules of pipe shown in Table X2.1 are regularly available. Other schedules may be furnished, and the manufacturer should be consulted. Table X2.1 is published for information only.

X3. CONDITIONS AND FINISHES NORMALLY SUPPLIED

X3.1 Scope

X3.1.1 This appendix lists the conditions and finishes in which pipe and tube (other than converter sizes) are normally supplied. These are subject to change, and the manufacturer should be consulted for the latest information available.

X3.2 Cold-Worked Tube and Pipe

X3.2.1 *Cold-Worked, Annealed, with Ground Outside Diameter*— The inside diameter may have a bright finish when material is annealed in a protective atmosphere; otherwise, the inside diameter is supplied descaled as necessary. It is available in sizes ½ to 4 in. (12.7 to 102 mm), inclusive, in outside diameter in both normal and heavy-wall tube, and pipe sizes, all schedules, of corresponding outside-diameter dimensions.

X3.2.2 *Cold-Worked, Annealed, and Pickled (Not Ground)* — Outside and inside diameter will have dull, matte (pickled) surfaces. It is available in sizes ½ to 6⅝ in. (12.7 to 168 mm), inclusive, in outside diameter in both normal and heavy-wall tube, and pipe sizes, all schedules, of corresponding outside-diameter dimensions.

X3.3 Hot-Worked Tube

X3.3.1 *Hot-Worked or Hot-Worked-Annealed (Not Pickled) Tube* — Has an oxide surface resulting from the hot-working operation. Intended generally for machined parts where the oxide surface will be removed.

X3.3.2 *Hot-Worked or Hot-Worked-Annealed (Pickled) Tube* — Has the oxide surface removed on both outside and inside diameters by pickling. Surface may be spot ground for removal of minor surface imperfections at the manufacturer's option.

X3.3.3 *Hot-Worked or Hot-Worked-Annealed (Machined Outside and Inside Diameters) Tubes* — The outside and inside diameter surfaces are machined to specified dimensions. Minor surface imperfections may be spot ground for removal, at the manufacturer's option.

TABLE X2.1
PIPE SCHEDULES[A]

Nominal Pipe Size, in.	Outside Diameter, in. (mm)	Nominal Wall Thickness, in. (mm)			
		Schedule No. 5	Schedule No. 10	Schedule No. 40	Schedule No. 80
¼	0.540 (13.7)	...	0.065 (1.6)	0.088 (2.2)	...
⅜	0.675 (17.1)	...	0.065 (1.6)	0.091 (2.3)	0.126 (3.2)
½	0.840 (21.3)	0.065 (1.6)	0.083 (2.1)	0.109 (2.8)	0.147 (3.7)
¾	1.050 (26.7)	0.065 (1.6)	0.083 (2.1)	0.113 (2.8)	0.154 (3.9)
1	1.315 (33.4)	0.065 (1.6)	0.109 (2.8)	0.133 (3.4)	0.179 (4.5)
1¼	1.660 (42.2)	0.065 (1.6)	0.109 (2.8)	0.140 (3.6)	0.191 (4.8)
1½	1.900 (48.3)	0.065 (1.6)	0.109 (2.8)	0.145 (3.7)	0.200 (5.1)
2	2.375 (60.3)	0.065 (1.6)	0.109 (2.8)	0.154 (3.9)	0.218 (5.5)
2½	2.875 (73.0)	0.083 (2.1)	0.120 (3.0)	0.203 (5.2)	0.276 (7.0)
3	3.500 (88.9)	0.083 (2.1)	0.120 (3.0)	0.216 (5.5)	0.300 (7.6)
3½	4.000 (101.6)	0.083 (2.1)	0.120 (3.0)	0.226 (5.7)	0.318 (8.1)
4	4.500 (114.3)	0.083 (2.1)	0.120 (3.0)	0.237 (6.0)	0.337 (8.6)
5	5.563 (141.3)	...	...	0.258 (6.5)	...
6	6.625 (168.3)	...	...	0.280 (7.1)	...

[A] The pipe schedules shown above conform with standards adopted by the American National Standards Institute.

SPECIFICATION FOR NICKEL-CHROMIUM-IRON ALLOYS (UNS N06600, N06601, N06603, N06690, N06693, N06025, AND N06045) AND NICKEL-CHROMIUM-COBALT-MOLYBDENUM ALLOY (UNS N06617) PLATE, SHEET, AND STRIP

SB-168

(Identical with ASTM Specification B 168-01 except for the deletion of the Supplementary Requirements for government procurement and the addition of UNS N06617 heat treatment requirements. Certification has been made mandatory.)

1. Scope

1.1 This specification covers rolled nickel-chromium-iron alloys (UNS N06600, N06601, N06603, N06690, N06693, N06025, and N06045) and nickel-chromium-cobalt-molybdenum alloy (UNS N06617) plate, sheet, and strip.

1.2 The values stated in inch-pound units are to be regarded as the standard. The values given in parentheses are for information only.

1.3 The following precautionary caveat pertains only to the test methods portion, Section 12, of this specification: *This standard does not purport to address all of the safety concerns, if any, associated with its use. It is the responsibility of the user of this standard to establish appropriate safety and health practices and determine the applicability of regulatory limitations prior to use.*

2. Referenced Documents

2.1 *ASTM Standards:*

B 880 Specification for General Requirements for Chemical Check Analysis Limits for Nickel, Nickel Alloys and Cobalt Alloys

E 8 Test Methods for Tension Testing of Metallic Materials

E 10 Test Method for Brinell Hardness of Metallic Materials

E 18 Test Methods for Rockwell Hardness and Rockwell Superficial Hardness of Metallic Materials

E 29 Practice for Using Significant Digits in Test Data to Determine Conformance with Specifications

E 38 Methods for Chemical Analysis of Nickel-Chromium and Nickel-Chromium-Iron Alloys

E 112 Test Methods for Determining the Average Grain Size

E 140 Hardness Conversion Tables for Metals

E 1473 Test Methods for Chemical Analysis of Nickel, Cobalt, and High-Temperature Alloys

F 155 Test Method for Temper of Strip and Sheet Metals for Electronic Devices (Spring-Back Method)

3. Terminology

3.1 *Descriptions of Terms Specific to This Standard* — The terms given in Table 1 shall apply.

4. Ordering Information

4.1 It is the responsibility of the purchaser to specify all requirements that are necessary for the safe and satisfactory performance of material ordered under this specification. Examples of such requirements include, but are not limited to, the following:

4.1.1 *Alloy* — Name or UNS number (see Table 2),

4.1.2 *ASTM designation,* including year of issue,

4.1.3 *Condition* — See 6.1 and 6.2 and Appendix X1,

TABLE 1
PRODUCT DESCRIPTION

Product	Thickness, in. (mm)	Width, in. (mm)
Hot-rolled plate[A]	$^3/_{16}$ and over (Tables 5 and 6)	(Table 8)[B]
Hot-rolled sheet[A]	0.018 to 0.250 (0.46 to 6.4), incl. (Table 7)	(Table 10)
Cold-rolled sheet[C]	0.018 to 0.250 (0.46 to 6.4), incl. (Table 7)	(Table 10)
Cold-rolled strip[C]	0.005 to 0.250 (0.13 to 6.4), incl. (Table 7)	(Table 10)

[A] Material $^3/_{16}$ to $^1/_4$ in. (4.8 to 6.4 mm), incl., in thickness may be furnished as sheet or plate provided the material meets the specification requirements for the condition ordered.

[B] Hot-rolled plate, in widths 10 in. (254 mm) and under, may be furnished as hot-finished rectangles with sheared or cut edges in accordance with Specification B 166, provided the mechanical property requirements of this specification are met.

[C] Material under 48 in. (1219 mm) in width may be furnished as sheet or strip provided the material meets the specification requirements for the condition ordered.

TABLE 2
CHEMICAL REQUIREMENTS

Element	Composition Limits, %							
	Alloy N06600	Alloy N06601	Alloy N06617	Alloy N06690	Alloy N06693	Alloy N06025	Alloy N06045	Alloy N06603
Nickel[A]	72.0 min.	58.0–63.0	44.5 min.	58.0 min.	balance	remainder	45.0 min.	Bal
Chromium	14.0–17.0	21.0–25.0	20.0–24.0	27.0–31.0	27.0–31.0	24.0–26.0	26.0–29.0	24.0–26.0
Cobalt	...	...	10.0–15.0	...	...	...	...	...
Molybdenum	...	...	8.0–10.0	...	N/S	...	...	...
Niobium	...	...	...	...	0.5–2.5	...	...	...
Iron	6.0–10.0	remainder	3.0 max.	7.0–11.0	2.5–6.0	8.0–11.0	21.0–25.0	8.0–11.0
Manganese	1.0 max.	1.0 max.	1.0 max.	0.5 max.	1.0 max.	0.15 max.	1.0 max.	0.15 max.
Aluminum	...	1.0–1.7	0.8–1.5	...	2.5–4.0	1.8–2.4	...	2.4–3.0
Carbon	0.15 max.	0.10 max.	0.05–0.15	0.05 max.	0.15 max.	0.15–0.25	0.05–0.12	0.20–0.40
Copper	0.5 max.	1.0 max.	0.5 max.	0.5 max.	0.5 max.	0.1 max.	0.3 max.	0.50 max.
Silicon	0.5 max.	0.5 max.	1.0 max.	0.5 max.	0.5 max.	0.5 max.	2.5–3.0	0.50 max.
Sulfur	0.015 max.	0.015 max.	0.015 max.	0.015 max.	0.01 max.	0.010 max.	0.010 max.	0.010 max.
Titanium	...	...	0.6 max.	...	1.0 max.	0.1–0.2	...	0.01–0.25
Phosphorus	...	...	...	...	...	0.020 max.	0.020 max.	0.020 max.
Zirconium	...	...	...	...	...	0.01–0.10	...	0.01–0.10
Yttrium	...	...	...	...	...	0.05–0.12	...	0.01–0.15
Boron	...	...	0.006 max.	...	...	...	...	...
Nitrogen	...	...	...	...	...	...	...	...
Cerium	...	...	...	...	...	...	0.03–0.09	...

[A] Element shall be determined arithmetically by difference.

4.1.4 *Finish* — Appendix X1,

4.1.5 *Dimensions* — Thickness, width, and length,

4.1.6 *Quantity,*

4.1.7 *Optional Requirements:*

4.1.7.1 *Sheet and Strip* — Whether to be furnished in coil, in cut straight lengths, or in random straight lengths,

4.1.7.2 *Strip* — Whether to be furnished with commercial slit edge, square edge, or round edge,

4.1.7.3 *Plate* — Whether to be furnished specially flattened (see 7.7.2); also how plate is to be cut (see 7.2.1 and 7.3.2),

4.1.8 *Certification* — Certification and a report of test results are required (Section 15),

4.1.9 *Samples for Product (Check) Analysis* — Whether samples for product (check) analysis should be furnished (see 5.2), and

4.1.10 *Purchaser Inspection* — If the purchaser wishes to witness tests or inspection of material at the

place of manufacture, the purchase order must so state indicating which tests or inspections are to be witnessed (Section 13).

5. Chemical Composition

5.1 The material shall conform to the requirements as to chemical composition prescribed in Table 2.

5.2 If a product (check) analysis is performed by the purchaser, the material shall conform to the product (check) analysis variations prescribed in Specification B 880.

6. Mechanical Properties and Other Requirements

6.1 *Mechanical Properties* — The material shall conform to the mechanical properties prescribed in Table 3.

6.2 *Deep Drawing and Spinning Quality Sheet and Strip* — The material shall conform to the grain size and hardness requirements as prescribed in Table 4.

6.2.1 The mechanical properties of Table 3 do not apply to deep drawing and spinning quality sheet and strip.

7. Dimensions and Permissible Variations

7.1 *Thickness and Weight:*

7.1.1 *Plate* — For plate up to 2 in. (50.8 mm), inclusive, in thickness, the permissible variation under the specified thickness and permissible excess in overweight shall not exceed the amounts prescribed in Table 5.

7.1.1.1 For use with Table 5, plate shall be assumed to weigh 0.304 lb/in.^{3} (8.415 g/cm^3).

7.1.2 *Plate* — For plate over 2 in. (50.8 mm) in thickness, the permissible variations over the specified thickness shall not exceed the amounts prescribed in Table 6.

7.1.3 *Sheet and Strip* — The permissible variations in thickness of sheet and strip shall be as prescribed in Table 7. The thickness of strip and sheet shall be measured with the micrometer spindle $\frac{3}{8}$ in. (9.5 mm) or more from either edge for material 1 in. (25.4 mm) or over in width and at any place on the strip under 1 in. in width.

7.2 *Width or Diameter:*

7.2.1 *Plate* — The permissible variations in width of rectangular plates and diameter of circular plates shall be as prescribed in Table 8 and Table 9.

7.2.2 *Sheet and Strip* — The permissible variations in width for sheet and strip shall be as prescribed in Table 10.

7.3 *Length:*

7.3.1 Sheet and strip of all sizes may be ordered to cut lengths, in which case a variation of $\frac{1}{8}$ in. (3.2 mm) over the specified length shall be permitted.

7.3.2 Permissible variations in length of rectangular plate shall be as prescribed in Table 11.

7.4 *Straightness:*

7.4.1 The edgewise curvature (depth of chord) of flat sheet, strip, and plate shall not exceed 0.05 in. multiplied by the length in feet (0.04 mm multiplied by the length in centimeters).

7.4.2 Straightness for coiled material is subject to agreement between the manufacturer and the purchaser.

7.5 *Edges:*

7.5.1 When finished edges of strip are specified in the contract or order, the following descriptions shall apply:

7.5.1.1 Square-edge strip shall be supplied with finished edges, with sharp, square corners, without bevel or rounding.

7.5.1.2 Round-edge strip shall be supplied with finished edges, semicircular in form, the diameter of the circle forming the edge being equal to the strip thickness.

7.5.1.3 When no description of any required form of strip edge is given, it shall be understood that edges such as those resulting from slitting or shearing will be acceptable.

7.5.1.4 Sheet shall have sheared or slit edges.

7.5.1.5 Plate shall have sheared or cut (machined, abrasive-cut, powder-cut, or inert-arc cut) edges, as specified.

7.6 *Squareness (Sheet)*— For sheets of all thicknesses, the angle between adjacent sides shall be 90 ± 0.15° [$\frac{1}{16}$ in. in 24 in. (1.6 mm in 610 mm)].

7.7 *Flatness:*

7.7.1 There shall be no flatness requirements for "deep-drawing quality," "spinning quality," or "as rolled" sheet and strip (see X1.4).

7.7.2 Standard flatness tolerances for plate shall conform to the requirements of Table 12. "Specially flattened" plate, when so specified, shall have permissible variations in flatness as agreed upon between the manufacturer and the purchaser.

8. Workmanship, Finish, and Appearance

8.1 The material shall be uniform in quality and temper, smooth, commercially straight or flat, and free of injurious imperfections.

TABLE 3
MECHANICAL PROPERTIES FOR PLATE, SHEET, AND STRIP
(ALL THICKNESSES AND SIZES UNLESS OTHERWISE INDICATED)

Condition (Temper)	Tensile Strength, Min., psi (MPa)	Yield Strength[A] (0.2% Offset), Min., psi (MPa)	Elongation in 2 in. or 50 mm (or 4D), Min., %	Rockwell Hardness[B,C]
Hot-Rolled Plate				
UNS N06600:				
Annealed	80 000 (550)	35 000 (240)	30	...
As-rolled[D,E]	85 000 (586)	35 000 (240)	30	...
UNS N06601:				
Annealed	80 000 (550)	30 000 (205)	30	...
UNS N06603:				
Annealed	94 000 (650)	43 000 (300)	25	...
UNS N06617:				
Annealed[H]	95 000 (655)	35 000 (240)	35	...
UNS N06690:				
Annealed	85 000 (586)	35 000 (240)	30	...
As-rolled[D,E]	85 000 (586)	35 000 (240)	30	...
Annealed[F]	75 000 (514)	30 000 (206)	30	...
UNS N06693:				
Annealed	85 000 (586)	40 000 (275)	30	...
UNS N06025:				
Annealed	98 000 (680)	39 000 (270)	30	...
UNS N06045:				
Annealed	90 000 (620)	35 000 (240)	35	...
Hot-Rolled Sheet				
UNS N06600:				
Annealed	80 000 (550)	35 000 (240)	30	...
UNS N06601:				
Annealed	80 000 (550)	30 000 (205)	30	...
UNS N06603:				
Annealed	94 000 (650)	43 000 (300)	25	...
UNS N06617:				
Annealed[H]	95 000 (655)	35 000 (240)	30	...
UNS N06690:				
Annealed	85 000 (586)	35 000 (240)	30	...
UNS N06693:				
Annealed	85 000 (586)	40 000 (275)	30	...
UNS N06025:				
Annealed	98 000 (680)	39 000 (270)	30	...
UNS N06045:				
Annealed	90 000 (620)	35 000 (240)	35	...
Cold-Rolled Plate				
UNS N06603:				
Annealed	94 000 (650)	43 000 (300)	25	...
UNS N06025:				
Annealed	98 000 (680)	39 000 (270)	30	...
UNS N06045:				
Annealed	90 000 (620)	35 000 (240)	35	...
Cold-Rolled Sheet				
UNS N06600:				
Annealed	80 000 (550)[G]	35 000 (240)	30[G]	...
Hard	125 000 (860)[G]	90 000 (620)	2[G]	...
UNS N06601:				
Annealed	80 000 (550)[G]	30 000 (205)	30[G]	...

(continued)

TABLE 3
MECHANICAL PROPERTIES FOR PLATE, SHEET, AND STRIP
(ALL THICKNESSES AND SIZES UNLESS OTHERWISE INDICATED) (CONT'D)

Condition (Temper)	Tensile Strength, Min., psi (MPa)	Yield Strength[A] (0.2% Offset), Min., psi (MPa)	Elongation in 2 in. or 50 mm (or 4*D*), Min., %	Rockwell Hardness[B,C]
		Cold-Rolled Sheet		
UNS N06603:				
Annealed	94 000 (650)	43 000 (300)	25[G]	...
UNS N06617:				
Annealed[H]	95 000 (655)[G]	35 000 (240)	30[G]	...
UNS N06690:				
Annealed	85 000 (586)[G]	35 000 (240)	30[G]	...
Hard	125 000 (860)[G]	90 000 (620)	2[G]	...
UNS N06693:				
Annealed	85 000 (586)	40 000 (275)	30	...
UNS N06025:				
Annealed	98 000 (680)	39 000 (270)	30	...
UNS N06045:				
Annealed	90 000 (620)	35 000 (240)	35	...
		Cold-Rolled Strip		
UNS N06600:				
Annealed	80 000 (550)[G]	35 000 (240)	30[G]	...
Skin-hard	...	...	...	B 85 to B 88
Quarter-hard	...	...	...	B 88 to B 94
Half-hard	...	...	...	B 93 to B 98
Three-quarter-hard	...	...	...	B 97 to C 25
Hard	125 000 (860)[G]	90 000 (620)	2[G]	...
Spring	...	...	...	C 30 min.
UNS N06601:				
Annealed	80 000 (550)[G]	30 000 (205)	30[G]	...
UNS N06603:				
Annealed	94 000 (650)	43 000 (300)	25[G]	...
UNS N06617:				
Annealed[H]	95 000 (655)[G]	35 000 (240)	30[G]	...
UNS N06690:				
Annealed	85 000 (586)[G]	35 000 (240)	30[G]	...
Skin-hard	...	...	...	B 85 to B 88
Quarter-hard	...	...	...	B 88 to B 94
Half-hard	...	...	...	B 93 to B 98
Three-quarter-hard	...	...	...	B 97 to C 25
Hard	125 000 (860)[G]	90 000 (620)	2[G]	...
Spring	...	...	...	C 30 min.
UNS N06693:				
Annealed	85 000 (586)	40 000 (275)	30	...
UNS N06025:				
Annealed	98 000 (680)	39 000 (270)	30	...
UNS N06045:				
Annealed	90 000 (620)	35 000 (240)	35	...

[A] Yield strength requirements do not apply to material under 0.020 in. (0.51 mm) in thickness.

[B] For Rockwell or equivalent hardness conversions, see Hardness Conversion Tables E 140.

[C] Caution should be served in using the Rockwell test on thin material, as the results may be affected by specimen thickness. For thicknesses under 0.050 in. (1.3 mm), the use of the Rockwell superficial or the Vickers hardness test is suggested.

[D] As-rolled plate may be given a stress relieving heat treatment subsequent to final rolling.

[E] As-rolled plate specified "suitable for hot forming" shall be furnished from heats of known good hot-malleability characteristics (see X1.2.2). There are no applicable tensile or hardness requirements for such material.

[F] Annealed at 1850°F (1010°C) minimum.

[G] Not applicable for thickness under 0.010 in. (0.25 mm).

[H] Solution anneal is done at 2100°F–2250°F and quenched in water or rapidly cooled by other means.

TABLE 4
GRAIN SIZE AND HARDNESS FOR COLD-ROLLED, DEEP-DRAWING, AND SPINNING-QUALITY SHEET AND STRIP

Thickness, in. (mm)	Calculated Diameter of Average Grain Section, Max., in. (mm)	Corresponding ASTM MicroGrain Size No.	Rockwell B[A,B] Hardness, Max.
Sheet [56 in. (1.42 m) Wide and Under]			
0.050 (1.3) and less	0.0030 (0.075)	4.5	86
Over 0.050 to 0.250 (1.3 to 6.4), incl.	0.0043 (0.110)	3.5	86
Strip [12 in. (305 mm) Wide and Under][C]			
0.005[D] to 0.010 (0.13 to 0.25), incl.	0.0009 (0.022)	8[E]	88[E]
Over 0.010 to 0.125 (0.25 to 3.2), incl.	0.0030 (0.075)	4.5	86

[A] For Rockwell or equivalent hardness conversions, see Hardness Conversion Tables E 140.

[B] Caution should be observed in using the Rockwell test on thin material, as the results may be affected by specimen thickness. For thicknesses under 0.050 in. (1.3 mm), the use of the Rockwell superficial or the Vickers hardness test is suggested.

[C] Sheet requirements (above) apply to strip thicknesses over 0.125 in. (3.2 mm), and for all thicknesses of strip over 12 in. (305 mm) in width.

[D] For ductility evaluations for strip under 0.005 in. (0.13 mm) in thickness, the springback test, such as described in Test Method F 155, is often used and the manufacturer should be consulted.

[E] Accurate grain size and hardness determinations are difficult to make on strip under 0.005 in. (0.13 mm) in thickness and are not recommended.

8.2 *Sheet, Strip, and Plate* — Sheet, strip, and plate supplied in the conditions and finishes as listed in the appendix may be ground or machined to remove surface imperfections, provided such removal does not reduce the material below the minimum specified dimensions. Surface eliminated depressions shall be faired smoothly into the surrounding material. The removal of a surface imperfection shall be verified by the method originally used to detect the imperfection.

9. Sampling

9.1 *Lot* — Definition:

9.1.1 A lot for chemical analysis shall consist of one heat.

9.1.2 A lot for mechanical properties, hardness, and grain size testing shall consist of all material from the same heat, nominal thickness, and condition.

9.1.2.1 Where material cannot be identified by heat, a lot shall consist of not more than 500 lb (227 kg) of material in the same thickness and condition, except for plates weighing over 500 lb, in which case only one specimen shall be taken.

9.2 *Test Material Selection:*

9.2.1 *Chemical Analysis* — Representative samples from each lot shall be taken during pouring or subsequent processing.

9.2.1.1 *Product (Check) Analysis* shall be wholly the responsibility of the purchaser.

9.2.2 *Mechanical Properties, Hardness, and Grain Size* — Samples of the material to provide test specimens for mechanical properties, hardness, and grain size shall be taken from such locations in each lot as to be representative of that lot.

10. Number of Tests

10.1 *Chemical Analysis* — One test per lot.

10.2 *Mechanical Properties* — One test per lot.

10.3 *Hardness* — One test per lot. (Required only as specified in Table 3 and Table 4.)

10.4 *Grain Size* — One test per lot. (Required only as specified in Table 4.)

TABLE 5
PERMISSIBLE VARIATIONS IN THICKNESS AND OVERWEIGHT OF RECTANGULAR PLATES

Specified Thickness, in. (mm)	Permissible Excess in Average Weight[B,C] per Square Foot of Plates for Widths Given in Inches (Millimeters) Expressed in Percentage of Nominal Weights									
	Under 48 (1220)	48 to 60 (1220 to 1520), Excl.	60 to 72 (1520 to 1830), Excl.	72 to 84 (1830 to 2130), Excl.	84 to 96 (2130 to 2440), Excl.	96 to 108 (2440 to 2740), Excl.	108 to 120 (2740 to 3050), Excl.	120 to 132 (3050 to 3350), Excl.	132 to 144 (3350 to 3660), Excl.	144 to 160 (3660 to 4070), Excl.
$^3/_{16}$ to $^5/_{16}$ (4.8 to 7.9), excl.	9.0	10.5	12.0	13.5	15.0	16.5	18.0	...	...	...
$^5/_{16}$ to $^3/_8$ (7.9 to 9.5), excl.	7.5	9.0	10.5	12.0	13.5	15.0	16.5	18.0	...	...
$^3/_8$ to $^7/_{16}$ (9.5 to 11.1), excl.	7.0	7.5	9.0	10.5	12.0	13.5	15.0	16.5	18.0	19.5
$^7/_{16}$ to $^1/_2$ (11.1 to 12.7), excl.	6.0	7.0	7.5	9.0	10.5	12.0	13.5	15.0	16.5	18.0
$^1/_2$ to $^5/_8$ (12.7 to 15.9), excl.	5.0	6.0	7.0	7.5	9.0	10.5	12.0	13.5	15.0	16.5
$^5/_8$ to $^3/_4$ (15.9 to 19.1), excl.	4.5	5.5	6.0	7.0	7.5	9.0	10.5	12.0	13.5	15.0
$^3/_4$ to 1 (19.1 to 25.4), excl.	4.0	4.5	5.5	6.0	7.0	7.5	9.0	10.5	12.0	13.5
1 to 2 (25.4 to 50.8), incl.	4.0	4.0	4.5	5.5	6.0	7.0	7.5	9.0	10.5	12.0

NOTE 1 — All plates shall be ordered to thickness and not to weight per square foot (cm). No plates shall vary more than 0.01 in. (0.3 mm) under the thickness ordered, and the overweight of each lot[A] in each shipment shall not exceed the amount in the table. Spot grinding is permitted to remove surface imperfections, such spots not to exceed 0.01 in. (0.3 mm) under the specified thickness.

[A] The term "lot" applied to this table means all of the plates of each group width and each group thickness.

[B] The permissible overweight for lots of circular and sketch plates shall be 25% greater than the amounts given in this table.

[C] The weight of individual plates shall not exceed the nominal weight by more than $1^1/_4$ times the amount given in the table and Footnote B.

TABLE 6
PERMISSIBLE VARIATIONS IN THICKNESS FOR RECTANGULAR PLATES OVER 2 in. (51 mm) IN THICKNESS

	Permissible Variations, in. (mm), Over Specified Thickness for Widths Given, in. (mm)					
Specified Thickness, in. (mm)	To 36 (915), Excl.	36 to 60 (915 to 1520), Excl.	60 to 84 (1520 to 2130), Excl.	84 to 120 (2130 to 3050), Excl.	120 to 132 (3050 to 3350), Excl.	132 (3350) and over
Over 2 to 3 (51 to 76), excl.	$^1/_{16}$ (1.6)	$^3/_{32}$ (2.4)	$^7/_{64}$ (2.8)	$^1/_8$ (3.2)	$^1/_8$ (3.2)	$^9/_{64}$ (3.6)
3 to 4 (76 to 102), incl.	$^5/_{64}$ (2.0)	$^3/_{32}$ (2.4)	$^7/_{64}$ (2.8)	$^1/_8$ (3.2)	$^1/_8$ (3.2)	$^9/_{64}$ (3.6)

NOTE 1 — Permissible variation under specified thickness, 0.01 in. (0.3 mm).

TABLE 7
PERMISSIBLE VARIATIONS IN THICKNESS OF SHEET AND STRIP
[Permissible Variations, Plus and Minus, in Thickness, in. (mm), for Widths Given in in. (mm)]

	Sheet[A]			
	Hot-Rolled		Cold-Rolled	
Specified Thickness, in. (mm)	48 (1220) and Under	Over 48 to 60 (1220 to 1520), Incl.	48 (1220) and Under	Over 48 to 60 (1220 to 1520), Incl.
0.018 to 0.025 (0.5 to 0.6), incl.	0.003 (0.08)	0.004 (0.10)	0.002 (0.05)	0.003 (0.08)
Over 0.025 to 0.034 (0.6 to 0.9), incl.	0.004 (0.10)	0.005 (0.13)	0.003 (0.08)	0.004 (0.10)
Over 0.034 to 0.043 (0.9 to 1.1), incl.	0.005 (0.13)	0.006 (0.15)	0.004 (0.10)	0.005 (0.13)
Over 0.043 to 0.056 (1.1 to 1.4), incl.	0.005 (0.13)	0.006 (0.15)	0.004 (0.10)	0.005 (0.13)
Over 0.056 to 0.070 (1.4 to 1.8), incl.	0.006 (0.15)	0.007 (0.18)	0.005 (0.13)	0.006 (0.15)
Over 0.070 to 0.078 (1.8 to 1.9), incl.	0.007 (0.18)	0.008 (0.20)	0.006 (0.15)	0.007 (0.18)
Over 0.078 to 0.093 (1.9 to 2.4), incl.	0.008 (0.20)	0.009 (0.23)	0.007 (0.18)	0.008 (0.20)
Over 0.093 to 0.109 (2.4 to 2.8), incl.	0.009 (0.23)	0.010 (0.25)	0.007 (0.18)	0.009 (0.23)
Over 0.109 to 0.125 (2.8 to 3.2), incl.	0.010 (0.25)	0.012 (0.31)	0.008 (0.20)	0.010 (0.25)
Over 0.125 to 0.140 (3.2 to 3.6), incl.	0.012 (0.31)	0.014 (0.36)	0.008 (0.20)	0.010 (0.25)
Over 0.140 to 0.171 (3.6 to 4.3), incl.	0.014 (0.36)	0.016 (0.41)	0.009 (0.23)	0.012 (0.31)
Over 0.171 to 0.187 (4.3 to 4.8), incl.	0.015 (0.38)	0.017 (0.43)	0.010 (0.25)	0.013 (0.33)
Over 0.187 to 0.218 (4.8 to 5.5), incl.	0.017 (0.43)	0.019 (0.48)	0.011 (0.28)	0.015 (0.38)
Over 0.218 to 0.234 (5.5 to 5.9), incl.	0.018 (0.46)	0.020 (0.51)	0.012 (0.31)	0.016 (0.41)
Over 0.234 to 0.250 (5.9 to 6.4), incl.	0.020 (0.51)	0.022 (0.56)	0.013 (0.33)	0.018 (0.46)

	Cold-Rolled Strip[A,B]
Specified Thickness, in. (mm)	Widths 12 in. (305 mm) and Under, Plus and Minus
Up to 0.050 (1.27), incl.	0.0015 (0.038)
Over 0.050 to 0.093 (1.27 to 2.39), incl.	0.0025 (0.063)
Over 0.093 to 0.125 (2.39 to 3.18), incl.	0.004 (0.11)

[A] Measured $^3/_8$ in. (9.5 mm) or more from either edge except for strip under 1 in. (25.4 mm) in width which is measured at any place.
[B] Standard sheet tolerances apply for thicknesses over 0.125 in. (3.2 mm) and for all thicknesses of strip over 12 in. (305 mm) wide.

TABLE 8
PERMISSIBLE VARIATIONS[A] OF SHEARED, PLASMA-TORCH-CUT, AND ABRASIVE-CUT RECTANGULAR PLATE[B,C]

	Permissible Variations in Widths for Widths Given, in. (mm)									
	Up to 30 (760), Incl.		Over 30 to 72 (760 to 1830), Incl.		Over 72 to 108 (1830 to 2740), Incl.		Over 108 to 144 (2740 to 3660), Incl.		Over 144 to 160 (3660 to 4070), Incl.	
Specified Thickness	+	−	+	−	+	−	+	−	+	−
Inches										
Sheared:[D]										
3/16 to 5/16, excl.	3/16	1/8	1/4	1/8	3/8	1/8	1/2	1/8	...	...
5/16 to 1/2, excl.	1/4	1/8	3/8	1/8	3/8	1/8	1/2	1/8	5/8	1/8
1/2 to 3/4, excl.	3/8	1/8	3/8	1/8	1/2	1/8	5/8	1/8	3/4	1/8
3/4 to 1, excl.	1/2	1/8	1/2	1/8	5/8	1/8	3/4	1/8	7/8	1/8
1 to 1 1/4, incl.	5/8	1/8	5/8	1/8	3/4	1/8	7/8	1/8	1	1/8
Abrasive cut:[E,F]										
3/16 to 1 1/4, incl.	1/8	1/8	1/8	1/8	1/8	1/8	1/8	1/8	1/8	1/8
Over 1 1/4 to 2 3/4, incl.	3/16	1/8	3/16	1/8	3/16	1/8	3/16	1/8	3/16	1/8
Plasma-torch-cut:[G]										
3/16 to 2, excl.	1/2	0	1/2	0	1/2	0	1/2	0	1/2	0
2 to 3, incl.	5/8	0	5/8	0	5/8	0	5/8	0	5/8	0
Millimeters										
Sheared:[D]										
4.8 to 7.9, excl.	4.8	3.2	6.4	3.2	9.5	3.2	12.7	3.2	...	...
7.9 to 12.7, excl.	6.4	3.2	9.5	3.2	9.5	3.2	12.7	3.2	15.9	3.2
12.7 to 19.1, excl.	9.5	3.2	9.5	3.2	12.7	3.2	15.9	3.2	19.1	3.2
19.1 to 25.4, excl.	12.7	3.2	12.7	3.2	15.8	3.2	19.1	3.2	22.2	3.2
25.4 to 31.8, incl.	15.9	3.2	15.9	3.2	19.1	3.2	22.2	3.2	25.4	3.2
Abrasive cut:[E,F]										
4.8 to 31.8, incl.	3.2	3.2	3.2	3.2	3.2	3.2	3.2	3.2	3.2	3.2
Over 31.8 to 69.8, incl.	4.8	3.2	4.8	3.2	4.8	3.2	4.8	3.2	4.8	3.2
Plasma-torch-cut:[G]										
4.8 to 50.8, excl.	12.7	0	12.7	0	12.7	0	12.7	0	12.7	0
50.8 to 76.2, incl.	15.9	0	15.9	0	15.9	0	15.9	0	15.9	0

[A] Permissible variations in width for powder- or inert-arc-cut plate shall be as agreed upon between the manufacturer and the purchaser.

[B] Permissible variations in machined, powder-, or inert-arc-cut circular plate shall be as agreed upon between the manufacturer and the purchaser.

[C] Permissible variations in plasma-torch-cut sketch plates shall be as agreed upon between the manufacturer and the purchaser.

[D] The minimum sheared width is 10 in. (254 mm) for material 3/4 in. (19.1 mm) and under in thickness and 20 in. (508 mm) for material over 3/4 in. (19.1 mm) in thickness.

[E] The minimum abrasive-cut width is 2 in. (50.8 mm) and increases to 4 in. (101.6 mm) for thicker plates.

[F] These tolerances are applicable to lengths of 240 in. (6100 mm), max. For lengths over 240 in. (6 100 mm), an additional 1/16 in. (1.6 mm) is permitted, both plus and minus.

[G] The tolerance spread shown for plasma-torch cutting may be obtained all on the minus side, or divided between the plus and minus side if so specified by the purchaser.

TABLE 9
PERMISSIBLE VARIATIONS IN DIAMETER FOR CIRCULAR PLATES

Specified Diameter, in. (mm)	Permissible Variations Over Specified Diameter for Thickness Given, in. (mm)[A]
	Sheared Plate
	To 3/8 (9.5), incl.
20 to 32 (508 to 813), excl.	1/4 (6.4)
32 to 84 (813 to 2130), excl.	5/16 (7.9)
84 to 108 (2130 to 2740), excl.	3/8 (9.5)
108 to 140 (2740 to 3580), incl.	7/16 (11.1)

Specified Diameter, in. (mm)	Thickness, Max. in. (mm)	Permissible Variations in Specified Diameter for Thickness Given, in. (mm)[C]			
		3/16 to 2 (4.8 to 50.8), excl.		2 to 3 (50.8 to 76.2), incl.	
		+	−	+	−
		Plasma-Torch-Cut Plate[B]			
19 to 20 (483 to 508), excl.	3 (76.2)	1/2 (12.7)	0	5/8 (15.9)	0
20 to 22 (508 to 559), excl.	2 3/4 (69.8)	1/2 (12.7)	0	5/8 (15.9)	0
22 to 24 (559 to 610), excl.	2 1/2 (63.5)	1/2 (12.7)	0	5/8 (15.9)	0
24 to 28 (610 to 711), excl.	2 1/4 (57.3)	1/2 (12.7)	0	5/8 (15.9)	0
28 to 32 (711 to 812), excl.	2 (50.8)	1/2 (12.7)	0	5/8 (15.9)	0
32 to 34 (812 to 864), excl.	1 3/4 (44.5)	1/2 (12.7)	0	...	...
34 to 38 (864 to 965), excl.	1 1/2 (38.1)	1/2 (12.7)	0	...	...
38 to 40 (965 to 1020), excl.	1 1/4 (31.8)	1/2 (12.7)	0	...	...
40 to 140 (1020 to 3560), incl.	3 (76.2)	1/2 (12.7)	0	5/8 (15.9)	0

[A] No permissible variations under.

[B] Permissible variations in plasma-torch-cut sketch plates shall be as agreed upon between the manufacturer and the purchaser.

[C] The tolerance spread shown may also be obtained all on the minus side or divided between the plus and minus sides if so specified by the purchaser.

TABLE 10
PERMISSIBLE VARIATIONS IN WIDTH OF SHEET AND STRIP

Specified Thickness, in. (mm)	Specified Width, in. (mm)	Permissible Variations in Specified Width, in. (mm)	
		+	−
	Sheet		
Up to 0.250 (6.35)	all	0.125 (3.18)	0
	Strip[A]		
Under 0.075 (1.9)	Up to 12 (305), incl.	0.007 (0.18)	0.007 (0.18)
	Over 12 to 48 (305 to 1219), incl.	0.062 (1.6)	0
0.075 to 0.100 (1.9 to 2.5), incl.	Up to 12 (305), incl.	0.009 (0.23)	0.009 (0.23)
	Over 12 to 48 (305 to 1219), incl.	0.062 (1.6)	0
Over 0.100 to 0.125 (2.5 to 3.2), incl.	Up to 12 (305), incl.	0.012 (0.30)	0.012 (0.30)
	Over 12 to 48 (305 to 1219), incl.	0.062 (1.6)	0
Over 0.125 to 0.160 (3.2 to 4.1), incl.	Up to 12 (305), incl.	0.016 (0.41)	0.016 (0.41)
	Over 12 to 48 (305 to 1219), incl.	0.062 (1.6)	0
Over 0.160 to 0.187 (4.1 to 4.7), incl.	Up to 12 (305), incl.	0.020 (0.51)	0.020 (0.51)
	Over 12 to 48 (305 to 1219), incl.	0.062 (1.6)	0
Over 0.187 to 0.250 (4.7 to 6.4), incl.	Up to 12 (305), incl.	0.062 (1.6)	0.062 (1.6)
	Over 12 to 48 (305 to 1219), incl.	0.062 (1.6)	0.062 (1.6)

[A] Rolled round or square-edge strip in thicknesses of 0.071 to 0.125 in. (1.80 to 3.18 mm), incl. in widths 3 in. (76.2 mm) and under, shall have permissible width variations of ±0.005 in. (±0.13 mm). Permissible variations for other sizes shall be as agreed upon between the manufacturer and the purchaser.

TABLE 11
PERMISSIBLE VARIATIONS IN LENGTH[A] OF SHEARED, PLASMA-TORCH-CUT,[B] AND ABRASIVE-CUT RECTANGULAR PLATE[C]

	Permissible Variations in Length for Lengths Given, in. (mm)															
	Up to 60 (1520), Incl.		Over 60 to 96 (1520 to 2440), Incl.		Over 96 to 120 (2440 to 3050), Incl.		Over 120 to 240 (3050 to 6096), Incl.		Over 240 to 360 (6096 to 9144), Incl.		Over 360 to 450 (9144 to 11 430), Incl.		Over 450 to 540 (11 430 to 13 716), Incl.		Over 540 (13 716)	
Specified Thickness	+	−	+	−	+	−	+	−	+	−	+	−	+	−	+	−
Inches																
Sheared:[D]																
3/16 to 5/16, excl.	3/16	1/8	1/4	1/8	3/8	1/8	1/2	1/8	5/8	1/8	3/4	1/8	7/8	1/8	...	...
5/16 to 1/2, excl.	3/8	1/8	1/2	1/8	1/2	1/8	1/2	1/8	5/8	1/8	3/4	1/8	7/8	1/8	1	1/8
1/2 to 3/4, excl.	1/2	1/8	1/2	1/8	5/8	1/8	5/8	1/8	3/4	1/8	7/8	1/8	1 1/8	1/8	1 3/8	1/8
3/4 to 1, excl.	5/8	1/8	5/8	1/8	5/8	1/8	3/4	1/8	7/8	1/8	1 1/8	1/8	1 3/8	1/8	1 5/8	1/8
1 to 1 1/4, incl.	3/4	1/8	3/4	1/8	3/4	1/8	7/8	1/8	1 1/8	1/8	1 3/8	1/8	1 5/8	1/8	...	...
Abrasive cut:[E]																
3/16 to 1 1/4, incl.	1/8	1/8	1/8	1/8	1/8	1/8	1/8	1/8	1/8	1/8	1/8	1/8	...	...	...	...
Over 1 1/4 to 2 3/4, incl.	3/16	1/8	3/16	1/8	3/16	1/8	3/16	1/8	3/16	1/8	3/16	1/8	...	...	...	...
Plasma-torch-cut:[F]																
3/16 to 2, excl.	1/2	0	1/2	0	1/2	0	1/2	0	1/2	0	1/2	0	1/2	0	1/2	0
2 to 3, incl.	5/8	0	5/8	0	5/8	0	5/8	0	5/8	0	5/8	0	5/8	0	5/8	0
Millimeters																
Sheared:[D]																
4.8 to 7.9, excl.	4.8	3.2	6.4	3.2	9.5	3.2	12.7	3.2	15.9	3.2	19.0	3.2	22.2	3.2	...	...
7.9 to 12.7, excl.	9.5	3.2	12.7	3.2	12.7	3.2	12.7	3.2	15.9	3.2	19.0	3.2	22.2	3.2	25.4	3.2
12.7 to 19.0, excl.	12.7	3.2	12.7	3.2	15.9	3.2	15.9	3.2	19.0	3.2	22.2	3.2	28.6	3.2	34.9	3.2
19.0 to 25.4, excl.	15.9	3.2	15.9	3.2	15.9	3.2	19.0	3.2	22.2	3.2	28.6	3.2	34.9	3.2	41.3	3.2
25.4 to 31.8, incl.	19.0	3.2	19.0	3.2	19.0	3.2	22.2	3.2	28.6	3.2	34.9	3.2	41.3	3.2	...	...
Abrasive-cut:[E]																
4.8 to 31.8, incl.	3.2	3.2	3.2	3.2	3.2	3.2	3.2	3.2	3.2	3.2	3.2	3.2	...	...	...	...
Over 31.8 to 69.9, incl.	4.8	3.2	4.8	3.2	4.8	3.2	4.8	3.2	4.8	3.2	4.8	3.2	...	...	...	...
Plasma-torch-cut:[F]																
4.8 to 50.8, excl.	12.7	0	12.7	0	12.7	0	12.7	0	12.7	0	12.7	0	12.7	0	12.7	0
50.8 to 76.2, incl.	15.9	0	15.9	0	15.9	0	15.9	0	15.9	0	15.9	0	15.9	0	15.9	0

[A] Permissible variations in length for powder- or inert-arc-cut plate shall be agreed upon between the manufacturer and the purchaser.

[B] The tolerance spread shown for plasma-torch-cutting may be obtained all on the minus side, or divided between the plus and minus sides if so specified by the purchaser.

[C] Permissible variations in machined, powder- or inert-arc-cut circular plate shall be as agreed upon between the manufacturer and the purchaser.

[D] The minimum sheared length is 10 in. (254 mm).

[E] Abrasive cut applicable to a maximum length of 144 to 400 in. (3658 to 10 160 mm) depending on the thickness and width ordered.

[F] The tolerance spread shown for plasma-torch-cut sketch plates shall be as agreed upon between the manufacturer and the purchaser.

TABLE 12
PERMISSIBLE VARIATIONS FROM FLATNESS OF RECTANGULAR, CIRCULAR, AND SKETCH PLATES

Specified Thickness	Permissible Variations from a Flat Surface for Thickness and Widths Given, in. (mm)								
	To 48 (1220), excl	48 to 60 (1220 to 1520), excl	60 to 72 (1520 to 1830), excl	72 to 84 (1830 to 2130), excl	84 to 96 (2130 to 2440), excl	96 to 108 (2440 to 2740), excl	108 to 120 (2740 to 3050), excl	120 to 144 (3050 to 3660), excl	144 (3660), and over
				Inches					
3/16 to 1/4, excl	3/4	1 1/16	1 1/4	1 3/8	1 5/8	1 5/8	...	...	...
1/4 to 3/8, excl	11/16	3/4	15/16	1 1/8	1 3/8	1 7/16	1 9/16	1 7/8	...
3/8 to 1/2, excl	1/2	9/16	11/16	3/4	15/16	1 1/8	1 1/4	1 7/16	1 3/4
1/2 to 3/4, excl	1/2	9/16	5/8	5/8	13/16	1 1/8	1 1/8	1 1/8	1 3/8
3/4 to 1, excl	1/2	9/16	5/8	5/8	3/4	13/16	15/16	1	1 1/8
1 to 2, excl	1/2	9/16	9/16	9/16	11/16	11/16	11/16	3/4	1
2 to 4, incl	1/4	5/16	3/8	7/16	1/2	9/16	5/8	3/4	7/8
				Millimeters					
4.8 to 6.4, excl	19.0	27.0	31.8	34.9	41.3	41.3	...	...	...
6.4 to 9.5, excl	17.5	19.0	23.8	28.6	34.9	36.5	39.7	47.6	...
9.5 to 12.7, excl	12.7	14.3	17.5	19.0	23.8	28.6	31.8	36.5	44.4
12.7 to 19.0, excl	12.7	14.3	15.9	15.9	20.6	28.6	28.6	28.6	34.9
19.0 to 25.4, excl	12.7	14.3	15.9	15.9	19.0	20.6	23.8	25.4	28.6
25.4 to 50.8, excl	12.7	14.3	14.3	14.3	17.5	17.5	17.5	19.0	25.4
50.8 to 101.6, incl	6.4	7.9	9.5	11.1	12.7	14.3	15.9	19.0	22.2

NOTE 1 — Permissible variations apply to plates up to 12 ft (3660 mm) in length, or to any 12 ft (3660 mm) of longer plates.
NOTE 2 — If the longer dimension is under 36 in. (914 mm), the permissible variation is not greater than 1/4 in. (6.4 mm).
NOTE 3 — The shorter dimension specified is considered the width, and the permissible variation in flatness across the width does not exceed the tabular amount of that dimension.
NOTE 4 — The maximum deviation from a flat surface does not customarily exceed the tabular tolerance for the longer dimension specified.

11. Specimen Preparation

11.1 Tension test specimens shall be taken from material in the final condition (temper) and tested transverse to the direction of rolling when width will permit.

11.2 Tension test specimens shall be any of the standard or subsize specimens shown in Test Methods E 8.

11.3 In the event of disagreement, referee specimens shall be as follows:

11.3.1 Full thickness of the material, machined to the form and dimensions shown for the sheet-type specimen in Test Methods E 8 for material under 1/2 in. (12.7 mm) in thickness.

11.3.2 The largest possible round specimen shown in Test Methods E 8 for material 1/2 in. (12.7 mm) and over.

12. Test Methods

12.1 The chemical composition, mechanical, and other properties of the material as enumerated in this specification shall be determined, in case of disagreement, in accordance with the following methods:

Test	ASTM Designation
Chemical analysis	E 38,[A] E 1473
Tension	E 8
Brinell hardness	E 10
Rockwell hardness	E 18
Hardness conversion	E 140
Grain size	E 112
Rounding procedure	E 29
Spring-back	F 155

[A] Methods E 38 are to be used only for elements not covered by Test Methods E 1473.

12.2 The measurement of average grain size may be carried out by the planimetric method, the comparison method, or the intercept method described in Test Methods E 112. In case of dispute, the referee method for determining average grain size shall be the planimetric method.

12.3 For purposes of determining compliance with the specified limits for requirements of the properties

listed in the following table, an observed value or a calculated value shall be rounded as indicated in accordance with the rounding method of Practice E 29.

Test	Rounded Unit for Observed or Calculated Value
Chemical composition, hardness, and tolerances (when expressed in decimals)	Nearest unit in the last right-hand place of figures of the specified limit. If two choices are possible, as when the digits dropped are exactly a 5, or a 5 followed only by zeros, choose the one ending in an even digit, with zero defined as an even digit.
Tensile strength and yield strength	Nearest 1000 psi (6.9 MPa)
Elongation	Nearest 1%
Grain Size: 0.0024 in. (0.060 mm) or larger	Nearest multiple of 0.0002 in. (0.005 mm)
Less than 0.0024 in. (0.060 mm)	Nearest multiple of 0.0001 in. (0.002 mm)

13. Inspection

13.1 Inspection of the material shall be made as agreed upon between the manufacturer and the purchaser as part of the purchase contract.

14. Rejection and Rehearing

14.1 Material that fails to conform to the requirements of this specification may be rejected. Rejection should be reported to the producer or supplier promptly and in writing. In case of dissatisfaction with the results of the test, the producer or supplier may make claim for a rehearing.

15. Certification

15.1 A manufacturer's certification shall be furnished to the purchaser stating that material has been manufactured, tested, and inspected in accordance with this specification, and that the test results on representative samples meet specification requirements. A report of the test results shall be furnished.

16. Product Marking

16.1 Each bundle or shipping container shall be marked with the name of the material or UNS number; condition (temper); this specification number; the size; gross, tare, and net weight; consignor and consignee address; contract or order number; or such other information as may be defined in the contract or order.

17. Keywords

17.1 plate; sheet; strip; UNS N06025; UNS N06045; UNS N06600; UNS N06601; UNS N06603; UNS N06617; UNS N06690; UNS N06693

APPENDIX

(Nonmandatory Information)

X1. CONDITIONS AND FINISHES

X1.1 Scope

X1.1.1 This appendix lists the conditions and finishes in which plate, sheet, and strip are normally supplied. These are subject to change, and the manufacturer should be consulted for the latest information available.

X1.2 Plate, Hot-Rolled

X1.2.1 *Annealed* — Soft with an oxide surface, and suitable for heavy cold forming. Available with a descaled surface, when so specified.

X1.2.2 *As-Rolled* — With an oxide surface. Available with a descaled surface, when so specified. Suitable for flat work, mild forming, or tube sheets. When intended for tube sheets, specify that plates are to be specially flattened. When intended for hot forming, this should be indicated on the purchase order so that the manufacturer may select appropriate material.

X1.3 Plate, Cold-Rolled

X1.3.1 *Annealed* — Soft with an oxide surface; available in a descaled surface when so specified.

X1.4 Sheet, Hot-Rolled

X1.4.1 *Annealed and Pickled* — Soft with a pickled matte finish. Properties similar to X1.5.1 but with broader thickness tolerances. Not suggested for applications where the finish of a cold-rolled sheet is considered essential, or for deep drawing or spinning.

X1.5 Sheet and Strip, Cold-Rolled

X1.5.1 *Annealed* — Soft with a pickled or bright annealed finish.

X1.5.2 *Deep-Drawing or Spinning Quality* — Similar to X1.5.1, except furnished to controlled hardness and grain size and lightly leveled.

X1.5.3 *Skin-Hard* — Similar to X1.5.1, but given a light cold reduction to hardness range shown in Table 3.

X1.5.4 *Quarter-Hard* — Cold rolled to the hardness range indicated in Table 3, bright finish. Out-of-flatness must be expected and will vary with temper and thickness.

X1.5.5 *Half-Hard* — Cold rolled to the hardness range indicated in Table 3, bright finish. Out-of-flatness must be expected and will vary with temper and thickness.

X1.5.6 *Three-Quarter Hard* — Cold rolled to the hardness range indicated in Table 3, bright finish. Out-of-flatness must be expected and will vary with temper and thickness.

X1.5.7 *Hard* — Cold rolled to the tensile requirements indicated in Table 3, bright finish. Out-of-flatness must be expected and will vary with temper and thickness.

X1.5.8 *Spring Temper* — Cold rolled to the minimum hardness indicated in Table 3, bright finish. Out-of-flatness must be expected and will vary with temper and thickness.

SPECIFICATION FOR ALUMINUM BRONZE PLATE, SHEET, STRIP, AND ROLLED BAR

SB-169

(Identical with ASTM Specification B 169-95 for the alloy and temper covered except for the deletion of supplementary requirements for government procurement, and editorial differences. Certification has been made mandatory.)

1. Scope

1.1 This specification establishes the requirements for UNS Alloy No. C61400 aluminum bronze sheet, strip, and rolled bar.

1.1.1 The products made to this specification are commonly used for drawing, forming, stamping, and bending applications and are not intended for electrical applications.

1.2 This specification is the companion to SI Specification B 169M; therefore, no metric equivalents are presented in this specification.

NOTE 1 — The products produced under this general specification may be used in many applications where the individual requirements may be too specific to be determined by normal physical or mechanical testing. Therefore it may be advisable for the purchaser to submit samples or drawings to the manufacturer in order to be assured that the product furnished is suitable for the intended application.

NOTE 2 — Refer to Specification SB-171 for plate product.

2. Referenced Documents

2.1 The following documents in the current Book of Standards form a part of this specification to the extent referenced herein:

2.1.1 *ASTM Standards:*

B 169M Specification for Aluminum Bronze Plate, Sheet, Strip and Rolled Bar (Metric)

E 478 Test Methods for Chemical Analysis of Copper Alloys

E 290 Test Method for Semi-Guided Bend Test for Ductility of Metallic Materials

B 601 Practice for Temper Designations for Copper and Copper Alloys—Wrought and Cast

E 8 Test Methods for Tension Testing of Metallic Materials

E 54 Test Methods for Chemical Analysis of Special Brasses and Bronzes

E 62 Test Methods for Chemical Analysis of Copper and Copper Alloys (Photometric)

2.1.2 *ASME Standards:*

SB-171 Specification for Copper Alloy Plate and Sheet for Pressure Vessels, Condensers, and Heat Exchangers

SB-248 Specification for General Requirements for Wrought Copper and Copper-Alloy Plate, Sheet, Strip, and Rolled Bar

3. Ordering Information

3.1 Orders for products under this specification shall include the following information:

3.1.1 ASME designation and year of issue (for example, SB-169-95),

3.1.2 Copper Alloy UNS No. (for example, C61400),

3.1.3 Temper (for example, Section 6),

3.1.4 Dimensions, thickness and width (for example, Section 8),

3.1.5 Length,

3.1.6 How furnished, flat or rolls,

3.1.7 Total Weight; each size.

3.2 The following options are available and should be specified when required:

3.2.1 Type of Edge (for example, slit, sheared, sawed, etc.),

3.2.2 Heat identification or traceability details,

3.2.3 Bend test,

3.2.4 Certification, and

3.2.5 Mill Test Report.

4. General Requirements

4.1 The following sections of Specification SB-248 form a part of this specification:

4.1.1 Terminology,

4.1.2 Workmanship, Finish and Appearance,

4.1.3 Sampling,

4.1.4 Significance of Numerical Limits,

4.1.5 Inspection,

4.1.6 Rejection and Rehearing,

4.1.7 Certification,

4.1.8 Mill Test Reports,

4.1.9 Packaging and Package Marking,

4.1.10 Supplementary Requirements.

4.2 An identical section in this specification is supplementary to the referenced section in Specification SB-248.

5. Materials and Manufacture

5.1 *Material:*

5.1.1 The material of manufacture shall be from cast slabs (also termed cakes or ingots) of Copper Alloy UNS C61400 of such purity and soundness as to be suitable for processing into the products prescribed herein.

5.2 *Manufacture:*

5.2.1 The products shall be manufactured by such hot working, cold working and annealing processes as to produce a uniform wrought structure in the finished product. The product shall be hot or cold rolled to finish gage and subsequently annealed, if required, to meet the temper properties invoked.

5.2.2 *Edges:*

5.2.2.1 Slit edges shall be furnished unless otherwise specified in the contract or purchase order.

6. Chemical Composition

6.1 The specified copper alloy shall conform to the requirements of Table 1.

TABLE 1
CHEMICAL REQUIREMENTS

Element	Composition, % maximum unless shown as a range or minimum Copper Alloy UNS No. C61400
Copper (incl silver)	Remainder
Lead, max	0.01
Iron	1.5–3.5
Zinc, max	0.20
Aluminum	6.0–8.0
Manganese, max	1.0
Phosphorous, max	0.015

6.1.1 These specification limits do not preclude the presence of unnamed elements. Limits may be established and analysis required for unnamed elements by agreement between the supplier and the purchaser.

6.2 When all elements in Table 1 for the specified alloy are determined, the sum of the results shall be:

Alloy UNS No.	Sum of Results % min.
C61400	99.5

7. Temper

7.1 Products shall be available in the following tempers as defined in Practice B 601: annealed tempers O25 and O60.

NOTE 3 — Inquiry should be made to the supplier concerning the availability of the specific temper required.

8. Mechanical Property Requirements

8.1 The product furnished shall conform to the requirements of Table 2 for the specified alloy, temper, and dimensions prescribed.

9. Bending Requirements

9.1 When specified in the contract or purchase order, the test specimen shall withstand being bent cold, perpendicular to the direction of rolling (right way bend) through 120 deg. around a mandrel whose radius is equal to the thickness of the product. When the outside surface of the bend is examined with an unaided eye, no sign of fracturing shall be observed.

10. Dimensions, Mass, and Permissible Variations

10.1 The dimensions and tolerances for material described by this specification shall be as specified in the

TABLE 2
TENSILE REQUIREMENTS

Copper Alloy UNS No.	Temper[B] Standard (Former) Designations	Thickness, in.	Width, in.	Tensile Strength, min, ksi[A]	Yield Strength, at 0.5% extension under load, min, ksi[A]	Yield Strength[C] at 0.2% Extension Under Load, min, ksi	Elongation in 2 in., min, %
C61400	025 or 060 (annealed)	½ and under	all widths	72	32	30	35
		Over ½ to 2, incl.	all widths	70	30	28	35
		Over 2 to 5, incl.	all widths	65	28	26	35

[A] ksi = 1000 psi.
[B] Standard designations defined in Practice B 601.
[C] See 3.1.9.

current edition of Specification SB-248 with particular reference to the following tables and related paragraphs in that specification:

10.1.1 *Thickness* — Table 2.

10.1.2 *Width:*

10.1.2.1 *Slit Metal and Slit Metal With Rolled Edges* — Table 3.

10.1.2.2 *Square Sheared Metal* — Table 4.

10.1.2.3 *Sawed Metal* — Table 5.

10.1.3 *Length:*

10.1.3.1 *Length Tolerances for Straight Lengths* — Table 6.

10.1.3.2 *Schedule for Minimum Lengths and Maximum Weights of Ends for Specific Lengths with Ends, and Stock Lengths with Ends* — Table 7.

10.1.3.3 *Length Tolerance for Squared Sheared Metal* — Table 8.

10.1.3.4 *Length Tolerances for Sawed Metal* — Table 9.

10.1.4 *Straightness:*

10.1.4.1 *Slit Metal or Slit Metal Either Straightened or Edge Rolled* — Table 10.

10.1.4.2 *Square Sheared Metal* — Table 11.

10.1.4.3 *Sawed Metal* — Table 12.

10.1.5 *Edges:*

10.1.5.1 *Square Edges* — Table 14.

10.1.5.2 *Rounded Corners* — Table 15.

10.1.5.3 *Rounded Edges* — Table 16.

10.1.5.4 *Full Rounded Edges* — Table 17.

11. Number of Tests and Retests

11.1 *Tests:*

11.1.1 *Chemical Analysis:*

11.1.1.1 Composition shall be determined as the average of at least two replicate determinations of each element in Table 1 for the specified alloy.

11.1.2 *Mechanical Properties:*

11.1.2.1 Tensile strength, yield strength, and elongation shall be reported as the average of results from at least two specimens.

11.1.3 *Bending Requirements:*

11.1.3.1 Two specimens shall be tested and both shall pass.

11.2 *Retests:*

11.2.1 *Chemical Analysis:*

11.2.1.1 Should the results for one or more of the elements in the specified alloy fail to conform with the requirements in Table 1, a retest may be made with a new composite made up from the pieces originally selected.

11.2.2 *Mechanical Properties:*

11.2.2.1 Should the test results obtained from the specified product fail to conform to the requirements of Table 2, a retest shall be permitted on two specimens made from the remaining pieces selected.

11.2.3 *Referee (Umpire) Tests:*

11.2.3.1 Refer to section entitled "Rejection and Rehearing" in Specification SB-248.

12. Specimen Preparation

12.1 *Chemical Analysis:*

12.1.1 Preparation of the analytical specimen shall be the responsibility of the reporting laboratory.

12.2 *Mechanical Properties:*

12.2.1 Tensile and yield test specimens shall be prepared in accordance with Test Methods E 8.

12.2.1.1 The tensile test specimen shall be taken so that the longitudinal axis is parallel to the direction of rolling.

12.3 *Bend Test:*

12.3.1 Bend test specimens shall be prepared as directed in Test Method E 290.

13. Test Methods

13.1 *Chemical Analysis:*

13.1.1 The chemical composition shall be determined, in case of disagreement, as follows:

Element	ASTM Method
Copper	E 478
Iron	E 478
Lead	E 478 (AA)
Zinc	E 478 (Titrimetric)
Aluminum	E 478
Manganese	E 62
Phosphorus	E 62
Silicon	E 54 (Sulfuric Acid)
Tin	E 478 (Photometric)
Nickel	E 478 (Photometric)

13.1.2 Test method(s) for the determination of element(s) required by contractural or purchase order agreement shall be as agreed upon between the supplier and purchaser.

13.2 *Other Tests:*

13.2.1 The product furnished shall conform with the mechanical and other requirements enumerated in this specification when tested in accordance with the following appropriate method:

Test	Method
Tensile Strength	E 8
Yield Strength	E 8
Elongation	E 8
Bending	E 290

13.2.1.1 Yield strength shall be determined in accordance with the "Extension-Under Load Method" of Test Methods E 8.

13.2.1.2 Elongation shall be determined as specified in the first two subsections of the section of Test Methods E 8 entitled "Elongation."

13.2.1.3 Test results are affected by variations in speed of testing. A considerable range of testing speed is permitted. The rate of stressing to the yield strength should not exceed 100 ksi/min. Above the yield strength, the movement per minute of the testing machine head under load should not exceed 0.5 in./in.

14. Certification

14.1 The manufacturer shall furnish to the purchaser a certificate stating that each lot has been sampled, tested, and inspected in accordance with this specification and has met the requirements.

15. Keywords

15.1 aluminum bronze; aluminum bronze sheet; aluminum bronze strip; aluminum bronze rolled bar

SPECIFICATION FOR COPPER-ALLOY PLATE AND SHEET FOR PRESSURE VESSELS, CONDENSERS, AND HEAT EXCHANGERS

SB-171

(Identical with ASTM Specification B 171-95 for the alloys covered except for editorial differences. Certifcation has been made mandatory.)

1. Scope

1.1 This specification covers copper-alloy plate and sheet for pressure vessels, condensers, and heat exchangers. The following alloys are covered:

Copper Alloy UNS No.[A]	Previously Used Designation
C36500	Leaded Muntz Metal
C44300	Admiralty, Arsenical
C44400	Admiralty, Antimonial
C44500	Admiralty, Phosphorized
C46400	Naval Brass, Uninhibited
C46500	Naval Brass, Arsenical
C61300	Aluminum Bronze
C61400	Aluminum Bronze D
C63000	Aluminum-Nickel Bronze
C70600	90–10 Copper Nickel
C71500	70–30 Copper Nickel

[A] New designation established in accordance with ASTM E 527, Practice for Numbering Metals and Alloys (UNS). In the new UNS system, the designations for copper alloys are simply expansions of the present standard designations by a prefix "C" and a suffix "00."

2. Referenced Documents

2.1 *ASTM Standards:*

2.1.1 The following documents of the issue in effect on date of material purchased form a part of this specification to the extent referenced herein:

B 601 Practice for Temper Designations for Copper and Copper Alloys, Wrought and Cast

E 8 Methods Tension Testing of Metallic Materials

E 29 Recommended Practice for Indicating Which Places of Figures Are to Be Considered Significant in Specified Limiting Values

E 54 Test Methods for Chemical Analysis of Special Brasses and Bronzes

E 55 Practice for Sampling Wrought Nonferrous Metals and Alloys for Determination of Chemical Composition

E 62 Test Methods for Chemical Analysis of Copper and Copper Alloys (Photometric Method)

E 75 Test Methods for Chemical Analysis of Copper-Nickel and Copper-Nickel-Zinc Alloys

E 478 Methods for Chemical Analysis of Copper Alloys

E 527 Practice for Numbering Metals and Alloys (UNS)

2.2 *ASME Standards:*

SB-248 Specification for General Requirements for Wrought Copper and Copper Alloy Plate, Sheet, Strip, and Rolled Bar

3. Terminology

3.1 *Definitions:*

3.1.1 *blank* — a piece of flat product intended for subsequent fabrication by forming, bending, cupping, drawing, hot pressing, etc.

3.1.2 *lengths* — straight pieces of the product.

3.1.2.1 *specific* — straight lengths that are uniform in length, as specified, and subject to established length tolerances.

3.1.3 *plate* — a wrought flat product over 0.188 in. thick and over 12 in. wide, in lengths.

3.1.4 *sheet* — a rolled flat product up to and including 0.188 in. thick and over 24 in. wide, in flat lengths or coils (rolls).

TABLE 1
CHEMICAL REQUIREMENTS

Copper Alloy UNS No.[A]	Composition, %									
	Copper, incl Silver	Tin	Nickel, incl Cobalt	Manganese, max	Lead	Iron	Zinc	Aluminum	Chromium	Other Named Elements
C36500	58.0–61.0	0.25 max	...	...	0.25–0.7	0.15 max	remainder	...	...	...
C44300	70.0–73.0	0.8–1.2	...	...	0.07 max	0.06 max	remainder	...	...	0.02–0.06 As
C44400	70.0–71.0	0.8–1.2	...	...	0.07 max	0.06 max	remainder	...	...	0.02–0.10 Sb
C44500	70.0–73.0	0.8–1.2	...	...	0.07 max	0.06 max	remainder	...	...	0.02–0.10 P
C46400	59.0–62.0	0.5–1.0	...	...	0.20 max	0.10 max	remainder	...	...	...
C46500	59.0–62.0	0.5–1.0	...	...	0.20 max	0.10 max	remainder	...	...	0.02–0.06 As
C61400	remainder	...	...	1.0	0.01 max	1.5–3.5	0.20 max	6.0–8.0	...	0.015 P max
C63000	remainder	0.20 max	4.0–5.5	1.5	...	2.0–4.0	0.30 max	9.0–11.0	...	0.25 Si max
C70600	remainder	...	9.0–11.0	1.0	0.05 max[B]	1.0–1.8	1.0 max[B]	...	...	[B]
C71500	remainder	...	29.0–33.0	1.0	0.05 max[B]	0.40–1.0	1.0 max[B]	...	...	[B]

[A] New designation established in accordance with Practice E 527, Practice for Numbering Metals and Alloys (UNS).
[B] When the product is for subsequent welding applications, and so specified by the purchaser, zinc shall be 0.50% max, lead 0.02% max, phosphorous 0.02% max, sulfur 0.02% max, and carbon 0.05%.

4. Ordering Information

4.1 Orders for material under this specification shall include the following information:

4.1.1 Copper Alloy UNS No. (Section 6, Table 1).

4.1.1.1 Whether the alloy ordered will be used in applications requiring it to be welded (see Table 1, Footnotes B and C).

4.1.2 Whether plate is to be machined (see 8.3),

4.1.3 How tolerance is specified (Footnote A, Table 3),

4.1.4 Weight (total for each size),

4.1.5 Mill test report, if required (Section 17),

4.1.6 Special marking, if required (Section 18), and

4.1.7 Whether 0.2% offset yield strength is required.

5. Materials and Manufacture

5.1 The material shall be of such quality and purity that the finished product shall have the properties and characteristics prescribed in this specification.

6. Chemical Composition

6.1 The materials shall conform to the chemical requirements prescribed in Table 1.

6.2 These specification limits do not preclude the presence of other elements. Limits for unnamed elements may be established by ageement between manufacturer or supplier and purchaser.

6.3 For the alloys listed in the table below either copper or zinc may be taken as the difference between the sum of all the elements analyzed and 100%. When all the elements in Table 1 are analyzed, their sum shall be as shown in the table below.

Copper Alloy UNS No.	Copper Plus Named Elements, %, Min.
C36500	99.6
C44300	99.6
C44400	99.6
C44500	99.6
C46400	99.6
C46500	99.6
C61400	99.5
C63000	99.5

6.3.1 For the alloys listed in the following table copper may be taken as the difference between the sum of all the elements analyzed and 100%. When all the elements in Table 1 are analyzed, their sum shall be as shown in the table below.

Copper Alloy UNS No.	Copper Plus Named Elements, %, Min.
C70600	99.5
C71500	99.5

7. Temper

7.1 The only temper applicable to this specification is described in Practice B 601, as Hot Rolled and Annealed (O25).

8. Tensile Properties

8.1 The plates and sheet shall conform to the requirements as to tensile properties prescribed in Table 2.

TABLE 2
TENSILE REQUIREMENTS

Copper Alloy UNS No.	Thickness in.	Tensile Strength min, ksi[B]	Yield Strength,[A] min, ksi[B]	Yield Strength at 0.2 % Offset, min, ksi[B]	Elongation in 2 in., min, %
C36500	2 and under	50	20	20	35
	over 2 to 3.5, incl	45	15	15	35
	over 3.5 to 5, incl	40	12	12	35
C44300, C44400, and C44500	4 and under	45	15	15	35
C46400, C46500	3 and under	50	20	20	35
	over 3 to 5, incl	50	18	18	35
C61300	2 and under	75	37	36	30
	over 2 to 3, incl	70	30	28	35
	over 3 to 5, incl	65	28	26	35
C61400	2 and under	70	30	28	35
	over 2 to 5, incl	65	28	26	35
C63000	2 and under	90	36	34	10
	over 2 to 3.5, incl	85	33	31	10
	over 3.5 to 5, incl	80	30	28	10
C70600	2.5 and under	40	15	15	30
	over 2.5 to 5, incl	40	15	15	30
C71500	2.5 and under	50	20	20	30
	over 2.5 to 5, incl	45	18	18	30

[A] Yield strength shall be determined as the stress producing in elongation of 0.5% under load, that is, 0.01 in. in a gage length of 2 in.
[B] ksi = 1000 psi.

9. Dimensions and Permissible Variations

9.1 *Thickness:*

9.1.1 The thickness tolerances for plates of Copper Alloy UNS Nos. C36500, C44300, C44400, C44500, C46400, and C46500 shall be as prescribed in Table 2.

9.1.2 The thickness tolerances for plates of Copper Alloy UNS Nos. C61300, C61400, C63000, C70600, and C71500 shall be 25% greater than those prescribed in Table 3.

9.1.3 If plates are machined, the thickness tolerances shall apply to the machined portion only.

9.1.4 Closer thickness tolerances than those prescribed in Table 3 can be furnished by surface machining. This is a special product and is subject to agreement between the manufacturer and the purchaser.

9.1.5 Unless otherwise agreed to by the manufacturer and the purchaser, the thickness of plate to this specification shall be determined by measuring along the length of the plate up to a distance of 7 in. in from the edge.

9.2 *Diameters, Lengths, or Widths* — The diameters, lengths, or widths of plates shall be not less than those

TABLE 3
THICKNESS TOLERANCES

	Thickness Tolerance, Plus and Minus,[A] in. for Diameters or Widths			
Thickness, in.	36 in. or Under	Over 36 to 60 in., incl	Over 60 to 96 in., incl	Over 96 to 132 in., incl
Over 0.125 to 0.250, incl	0.010	0.012	0.022	0.028
Over 0.250 to 0.500, incl	0.025	0.027	0.029	0.031
Over 0.500 to 0.750, incl	0.028	0.030	0.032	0.035
Over 0.750 to 1.000, incl	0.033	0.035	0.037	0.040
Over 1.000 to 1.500, incl	0.038	0.040	0.042	0.045
Over 1.500 to 1.750, incl	0.043	0.045	0.047	0.050
Over 1.750 to 2.000, incl	0.050	0.055	0.062	0.065
Over 2.000 to 5.000, incl	0.058	0.062	0.065	. . .

[A] When tolerances are specified as all plus or all minus, double the values given.
[B] See 9.1.2 for specific alloys with a different tolerance.

TABLE 4
DIAMETER, LENGTH, OR WIDTH TOLERANCES

Diameter, Length, or Width, in.	Permissible Excess in Diameter, Length, or Width, in.
36 or under	3/64
Over 36 to 60, incl	1/16
Over 60 to 96, incl	3/32
Over 96 to 132, incl	7/64

TABLE 5
FLATNESS TOLERANCES

Copper Alloy UNS No.	Flatness Tolerances (Depth of Arc) not to Exceed, in., for Diameters, Lengths, or Widths Shown: 36 in. or Under	Over 36 to 60 in., incl	Over 60 to 132 in., incl[A]
C36500, C46400, and C46500	0.050	0.055	0.060
C44300, C44400, and C44500	0.050	0.065	0.075
C61300, C61400, and C63000	0.060	...	...
C70600 and C71500	0.060	0.075	0.090

[A] Tolerance applies to any 72 in. chord.

specified. The diameters, lengths, or widths of plates may exceed those specified by the amounts shown in Table 4.

NOTE 1 — For the purpose of determining conformance with the dimensional requirements prescribed in this specification, any measured value outside the specified limiting values for any dimension may be cause for rejection.

9.3 *Flatness* — The flatness tolerances of individual plates shall not exceed those prescribed in Table 5. The tolerances shown are the total permissible variations for plates as ordered, and do not apply to the 7-in. marginal area at the edge of the plate. Inspection for flatness shall be made by placing the plate on a flat-surface table with the side marked "Straight Side" up, applying a 72-in. straightedge when the size permits, or a shorter one equal to the dimension to be inspected, and measuring the depth of arc between the straightedge and the plate.

9.4 *Plate and Sheet Lot Weight for Pressure Vessels* — When plate or sheet of Copper Alloy UNS Nos. C70600 and C71500 are ordered for pressure vessels exclusively, the maximum lot weight restriction in Table 6 shall apply in addition to the thickness tolerance requirement of Table 3. The weight of each lot of 5 or more plates or sheets shall not exceed the nominal weight by more than the amount prescribed in Table 6. Plate and sheet of lots of less than 5 shall be governed solely by the thickness tolerances of Table 3. For purposes of calculating weights, the densities used shall be as listed in Table 7.

10. Workmanship, Finish, and Appearance

10.1 The material shall be free of injurious defects and have a smooth clean surface such as results from rolling operation, unless otherwise specified.

11. Sampling

11.1 The lot size, portion size, and selection of pieces shall be as follows:

11.1.1 *Lot Size* — 10,000 lb, or less material of the same mill form, alloy, temper, and thickness, subject to inspection at one time.

11.1.2 *Portion Size* — Sample pieces shall be selected so as to be representative of four individual pieces in each lot. If the lot consists of less than four pieces, samples shall be selected so as to be representative of each piece.

12. Number of Tests and Retests

12.1 *Chemical Analysis* — A sample for chemical analysis shall be taken and prepared in accordance with Practice E 55. Drillings, millings, etc., shall be taken in approximately equal weight from each of the sample pieces selected in accordance with 11.1.2 and combined into one composite sample. The minimum weight of the composite sample that is to be divided into three equal parts shall be 150 g.

12.1.1 Instead of sampling in accordance with Practice E 55, the manufacturer shall have the option of determining conformance to chemical composition as follows: Conformance shall be determined by the manufacturer by analyzing samples taken at the time the castings are poured or samples taken from the semi-finished product. If the manufacturer determines the chemical composition of the material during the course of manufacture, he shall not be required to sample and analyze the finished product. The number of samples taken for determination of chemical composition shall be as follows:

12.1.1.1 When samples are taken at the time the castings are poured, at least one sample shall be taken for each group of castings poured simultaneously from the same source of molten metal.

12.1.1.2 When samples are taken from the semi-finished product, a sample shall be taken to represent each 10,000 lb or fraction thereof, except that not more than one sample shall be required per piece.

TABLE 6
LOT WEIGHT TOLERANCES IN PERCENTAGE OF THEORETICAL WEIGHT, ALL PLUS COPPER ALLOY UNS NOS. C70600 AND C71500 FOR USE IN PRESSURE VESSELS EXCLUSIVELY

Specified Thickness in.	Permissible Excess in Average Weights of Lots, Expressed in Percentage of Nominal Weights					
	48 in. and Under in Width	Over 48 in. to 60 in. in Width	Over 60 in. to 72 in. in Width	Over 72 in. to 96 in. in Width	Over 96 in. to 120 in. in Width	Over 120 in. to 132 in. in Width
Over ½ to ⅜	5.75	6.5	7.5	9	10	11
Over ⅜ to ¾	5.5	6	7	8	9	10
Over ¾ to 1	5	5	6.25	7	8	9
Over 1 to 2	3.5	4	5	6	7	8

TABLE 7
DENSITIES

Copper Alloy UNS Nos.	Density lb/in.^{3}
C36500	0.304
C44300, C44400, C44500	0.308
C46400, C46500	0.304
C61300, C61400	0.285
C63000	0.274
C70600, C71500	0.323

12.2 *Other Tests* — For other tests, a specimen shall be taken from two of the sample pieces selected in accordance with 11.1.2. The required tests shall be made on each of the specimens so selected.

12.3 *Retests:*

12.3.1 If any test specimen shows defective machining or develops flaws, it may be discarded and another specimen substituted.

12.3.2 If the percentage elongation of any test specimen is less than that specified, and any part of the fracture is outside the middle two thirds of the gage length or in a punched or scribed mark within the reduced section, a retest shall be allowed.

12.3.3 If one of the tests made to determine any of the mechanical properties fails to meet a specified limit, this test shall be repeated on two of the remaining pieces selected in accordance with 11.1.2 and the results of both of these tests shall comply with the specified requirements.

12.3.4 If the chemical analysis fails to conform to the specified limits, analysis shall be made on a new composite sample, prepared from the pieces selected in accordance with 11.1.2. The results of this retest shall comply with the specified requirements.

13. Test Methods

13.1 The properties and chemical compositions enumerated in this specification shall, in case of disagreement, be determined in accordance with the following ASTM methods:

Test	ASTM Designation
Chemical analysis	E 54, E 62, E 75, E 478
Tension	E 8[A]

[A] The tension test specimen shall conform to the dimensions shown in Fig. 7 or 8 of Test Methods E 8.

13.2 In case of disagreement, the sulfur content of the alloys covered in this specification shall be determined in accordance with the method given in the annex to Specification SB-248.

14. Significance of Numerical Limits

14.1 For purposes of determining compliance with the specified limits for requirements of the properties listed in the following table, an observed value or a calculated value shall be rounded as indicated in accordance with the rounding method of Recommended Practice E 29:

Property	Rounded Unit for Observed or Calculated Value
Chemical compositon	Nearest unit in the last righthand place of figures
Tensile strength	Nearest ksi
Yield Strength	Nearest ksi
Elongation:	
5% and over	Nearest 1%

15. Inspection

15.1 The manufacturer shall inspect and make the tests necessary to verify that the product furnished conforms to the requirements of this specification.

15.2 If, in addition, source inspection of the material by the purchaser is agreed upon by the manufacturer and the purchaser as part of the purchase contract, the nature of the facilities needed to satisfy the inspector representing the purchaser that the product is being furnished in accordance with this specification shall be included in the agreement. All tests and the inspection shall be conducted so as not to interfere unnecessarily with the operation of the works.

15.3 The manufacturer and the purchaser, by mutual agreement, may accomplish the final inspection simultaneously.

16. Rejection and Rehearing

16.1 Material that fails to conform to the requirements of this specification when inspected or tested by the purchaser or his agent may be rejected. Rejection should be reported to the manufacturer or supplier promptly and in writing. In case of dissatisfaction with the results of the test, the manufacturer or supplier may make claim for rehearing.

17. Certification

17.1 The manufacturer shall furnish to the purchaser a certificate stating that each lot has been sampled, tested, and inspected in accordance with this specification and has met the requirements.

18. Mill Test Report

18.1 When specified on the purchase order, the manufacturer shall furnish to the purchaser a test report showing results of tests required by the specification.

19. Packaging and Package Marking

19.1 The material shall be separated by size, composition, and temper, and prepared for shipment in such a manner as to ensure acceptance by common carrier for transportation and to afford protection from the normal hazards of transportation.

19.2 Each shipping unit shall be legibly marked with the purchase order number, metal or alloy designation, temper, size, shape, gross and net weight, and name of supplier. The specification number shall be shown, when specified.

19.3 *Product Identification* — The name or trademark of the manufacturer and the manufacturer's lot identification number shall be legibly stamped or stenciled on each finished plate and sheet in two places not less than 12 in. from the edges. If the plate and sheet are too small to locate the markings as above, the marking may be placed near the center of the plate and sheet. In the case of butt straps, the markings may be placed 12 in. from the end. The plate number and type shall be legibly stamped on each plate and on each test specimen.

20. Key Words

20.1 admiralty metal plate and sheet; muntz metal plate and sheet; naval brass plate and sheet; aluminum bronze plate and sheet; copper nickel plate and sheet for pressure vessels

SPECIFICATION FOR COPPER BAR, BUS BAR, ROD, AND SHAPES

SB-187

(Identical to ASTM Specification B 187-97 for the alloys and products covered, except for the deletion of requirements for government procurement. Requirements for the H04 temper have been deleted.)

1. Scope

1.1 This specification establishes the requirements for copper bar, bus bar, rod, and shapes for electrical and non-electrical applications.

1.1.1 The products for electrical applications shall be made from the following coppers:

Copper UNS No.	Reference Designation
C10200	OF
C11000	ETP

1.1.1.1 The product may be furnished from any copper listed unless otherwise specified in the contract or purchase order.

1.2 The inch-pound units are standard for this specification.

1.3 This specification is the companion to SI (Metric) Specification B 187M; therefore no SI equivalents are presented herein.

NOTE 1 — Material for hot forging will be found in Specification B 224.

2. Referenced Documents

2.1 *ASTM Standards*

2.1.1 The following documents in the current issue of the Book of Standards form a part of this specification to the extent referenced herein.

B 170 Specification for Oxygen-Free Electrolytic Copper — Refinery Shapes

B 187 M Specification for Copper Bar, Bus Bar, Rod and Shapes (Metric)

B 193 Test Method for Resistivity of Electrical Conductor Materials

B 216 Specification for Tough-Pitch Fine-Refined Copper for Wrought Products and Alloys — Refinery Shapes

B 224 Classification of Coppers

B 577 Test Methods for Hydrogen Embrittlement of Copper

B 601 Practice for Temper Designations for Copper and Copper Alloys — Wrought and Cast

E 53 Test Methods for Chemical Analysis of Copper

E 62 Test Methods for Chemical Analysis of Copper and Copper Alloys (Photometric Methods)

E 255 Practice for Sampling Copper and Copper Alloys for the Determination of Chemical Composition

E 478 Test Methods for Chemical Analysis of Copper Alloys

E 527 Practice for Numbering Metals and Alloys (UNS)

2.2 *ASME Standard*

SB-249 Specification for General Requirements for Wrought Copper and Copper-Alloy Rod, Bar, and Shapes

3. General Requirements

3.1 The following sections of Specification SB-249 are a part of this specification:

3.1.1 Terminology,

3.1.2 Materials and Manufacture,

3.1.3 Workmanship, Finish, and Appearance,

3.1.4 Number of Tests and Retests,

3.1.5 Test Methods,

3.1.6 Specimen Preparation,

3.1.7 Significance of Numerical Limits,

3.1.8 Inspection,

3.1.9 Rejection and Rehearing,

3.1.10 Certification,

3.1.11 Test Report, and

3.1.12 Packaging and Package Marking.

3.2 Identical sections in this specification supplement the referenced section.

4. Terminology

4.1 *Definitions*

4.1.1 *bus bar* — includes material of solid rectangular or square cross section or a solid section with two plane parallel surfaces and round or other simple regular shaped edges up to and including 12 in. in width and over 0.090 in. and over in thickness

4.1.2 *bus conductor stock* — a bar, rod, or shape of high conductivity copper used to make electrical conductors

4.1.3 *bus rod* — includes solid round and regular polygons of six and eight sides

4.1.4 *bus shapes* — a solid section other than regular rod, bar, plate, sheet, strip, or flat wire, that may be oval, half oval, half round, triangular, pentagonal, or of any special cross section furnished in straight lengths. Shapes shall not include tube and pipe or other hollow sections.

4.1.5 *unaided eye* — without visual enhancement; however, corrective spectacles necessary to obtain normal vision shall be permitted.

4.2 *Description of Term Specific to This Standard*

4.2.1 *orange peel* — the surface roughness resulting from working metal of large grain size. The surface is similar in texture to that of the outside surface of an orange.

5. Ordering Information

5.1 Orders for product under this specification should contain the following information:

5.1.1 ASTM specification designation and year of issue;

5.1.2 copper UNS number (see 7.1 and Table 1);

5.1.3 temper required (see 8.1 and Table 2);

5.1.4 dimensions and form;

5.1.4.1 shapes: dimensional tolerances required and agreed upon (see 13.3);

5.1.5 quantity: number of pounds, pieces, or footage required; and

5.1.6 edge contours required (see 13.7).

5.2 The following options are available and should be specified in the contract or purchase order when required:

5.2.1 heat identification or traceability details required;

5.2.2 hydrogen embrittlement test;

5.2.3 bend test;

5.2.4 certification;

5.2.5 mill test reports; and

5.2.6 special packaging requirements.

6. Materials and Manufacture

6.1 *Manufacture*

6.1.1 *Edges*

6.1.1.1 Bar shall be furnished with finished edges (see 13.7) unless otherwise specified at the time of order placement.

6.1.1.2 Bar larger than $\frac{1}{2}$ in. in thickness may be furnished with sawed edges and deburred corners upon agreement between the manufacturer or supplier and the purchaser.

7. Chemical Composition

7.1 The specified copper shall conform to the chemical requirements prescribed in Table 1.

7.2 These specification limits do not preclude the possible presence of other elements. Limits for unnamed elements may be established and analysis required by agreement between the manufacturer or the supplier and the purchaser.

8. Temper

8.1 The tempers available under this specification and as described in Practice B 601 is as follows:

Temper Designation	
Former	Standard
O60	Soft anneal

9. Physical Properties

9.1 *Electrical Resistivity*

9.1.1 When specified in the order, the electrical resistivity of Copper UNS Nos. C10200 and C11000 shall not exceed the limits prescribed in Table 2 for specified copper, temper, form, and size when determined in accordance with Test Method B 193.

TABLE 1
CHEMICAL REQUIREMENTS

Copper UNS No.	Composition % Max (Unless Shown as a Range or Min.)												
	Copper (Incl Silver)	Phosphorus	Lead	Arsenic	Silver	Antimony	Selenium + Tellurium	Nickel	Bismuth	Oxygen	Tellurium	Tin	Sulfur
C10200 [Note (1)]	99.95	...	...	...	...	...	...	...	...	...	...	...	...
C11000	99.90	...	...	...	...	...	...	...	...	...	...	...	...

GENERAL NOTE: If the type of silver-bearing copper is not specified (that is whether tough pitch, phosphorized, or oxygen-free), any one of the three types may be supplied at the option of the manufacturer.

NOTE:
(1) Oxygen in C10200 shall be 10 ppm max.

TABLE 2
MECHANICAL (ALL ALLOYS) AND ELECTRICAL REQUIREMENTS [NOTE (1)] (CONDUCTOR ALLOYS ONLY)

Temper Designation		Dia or Distance Between Parallel Surfaces, in.	Tensile Strength, ksi [Note (2)]		Elongation in 4 × Dia or Thickness of Specimen Min. % [Note (4)]	Bend Test Angle of Bend, deg.	Electrical Resistivity, [Note (3)] max, $\Omega \cdot g/m^2$ at 20°C (68°F)	
Standard	Former		Min.	Max			C10200, C11000	Rockwell Hardness F Scale, 60-kg Load, $\frac{1}{16}$-in. Ball
060	Soft anneal	Rod and bar: all sizes	28	37	25	180	0.15328	50 max

NOTES:
(1) See 8.1.
(2) ksi = 1,000 psi.
(3) See Appendix X1.
(4) In any case, a minimum gage length of 1 in. shall be used.

10. Mechanical Properties

10.1 *Tensile Requirements*

10.1.1 The tension test shall be the standard test for all tempers and acceptance or rejection for mechanical properties shall depend only on the tensile strength, which shall conform to the requirements in Table 2.

10.1.1.1 For shapes, the tensile requirements (if any) shall be by agreement between the manufacturer and the purchaser.

10.2 *Rockwell Hardness*

10.2.1 Rockwell hardness tests offer a quick and convenient method of checking copper of any temper for general conformity to the requirements of tensile strength. The approximate Rockwell hardness values for the specified tempers are given in Table 2 for general information and assistance in testing.

10.3 *Bending Requirements*

10.3.1 When specified in the contract or purchase order, for bar, bus bar, flat wire and rod, and test specimens shall withstand being bent cold (right way bend) through an angle as specified in Table 2 for the specified temper and size without fracture on the outside of the bent portion and with no evidence of slivers, cracks, orange peel, or similar surface defects being visible to the unaided eye.

10.3.2 The bend shall be made on a radius equal to the minimum cross-sectional dimension of the specimen, and this dimension shall be radial to the bend.

10.3.3 The axis of the bend shall be at an angle of 90° to the direction of rolling, drawing, or extrusion (right way bend).

10.3.4 Edgewise and wrong way bend test requirements for bar or bus bar shall be by agreement between the manufacturer or supplier and the purchaser.

11. Microscopical Examination

11.1 Copper UNS No. C10200 shall be substantially free of cuprous oxide as determined by Procedure A, Microscopical Examination, of Test Methods B 577.

11.1.1 In case of dispute, testing shall be in accordance with Procedure C, Closed Bend Test, of Test Methods B 577.

12. Embrittlement Test

12.1 When specified in the contract or purchase order, Copper UNS No. C10200 shall pass the embrittlement test described in Procedure B, Microscopical Examination of Thermally Treated Specimens, in Test Methods B 577.

TABLE 3
THICKNESS TOLERANCES FOR EXTRUDED RECTANGULAR AND SQUARE BAR PLUS AND MINUS, [NOTE (1)], in.

	Width			
Thickness	2 and Under	Over 2 to 4 Incl	Over 4 to 8 Incl	Over 8 to 12 Incl
Up to 0.500 incl	0.003	0.004	0.0045	0.0055
Over 0.500 to 1.000 incl	0.004	0.0045	0.005	0.006
Over 1.000 to 2.000 incl	0.0045	0.005	0.006	...

NOTE:
(1) When tolerances are specified as all plus or all minus, double the values given.

12.1.1 In case of dispute, testing shall be in accordance with Procedure C, Closed Bend Test, of Test Methods B 577.

13. Dimensions, Mass, and Permissible Variations

13.1 The dimensions and tolerances for material manufactured under this specification shall be as specified in the following tables:

13.2 *Diameter or Distance Between Parallel Surfaces*

13.2.1 *Rod: Round, Hexagonal, Octagonal* — See Table 3.

13.2.2 *Bar: Rectangular and Square*

13.2.2.1 *Thickness Tolerances for Rectangular and Square Bar* — See Table 3 and Table 4.

13.2.2.2 *Width Tolerances for Rectangular and Square Bar* — See Table 5 and Table 6.

13.3 *Shapes* — The dimensional tolerances of shapes shall be as agreed upon by the manufacturer or supplier and the purchaser and shall be specified in the order.

13.4 *Coils* — The coil size shall be as agreed upon between the manufacturer or supplier and the purchaser and shall be specified in the order.

13.5 *Length*

13.5.1 *Specified Length* — When exact lengths are ordered, the lengths shall be not less than the ordered length and shall not exceed it by more than the amount specified in Table 7.

13.5.2 *Stock Lengths* — For material ordered in stock lengths, full-length pieces shall be not less than the designated length and shall not exceed it by more than

TABLE 4
THICKNESS TOLERANCES FOR NON-EXTRUDED RECTANGULAR AND SQUARE BAR THICKNESS TOLERANCES, PLUS AND MINUS, [NOTE (1)] in., FOR WIDTHS GIVEN IN in.

Thickness	2 and Under Incl	Over 2 to 4 Incl	Over 4 to 8 Incl	Over 8 to 12 Incl
Up to 0.250 incl	0.0025	0.003	0.0035	0.005
Over 0.250 to 0.375 incl	0.003	0.004	0.0045	0.005
Over 0.375 to 0.500 incl	0.0035	0.0045	0.005	0.006
Over 0.500 to 0.750 incl	0.004	0.005	0.0055	0.007
Over 0.750 to 1.000 incl	0.005	0.006	0.007	0.009
Over 1.000 to 1.500 incl	0.015	0.020	0.022	0.025
Over 1.500 to 2.000 incl	0.020	0.024	0.026	0.030

NOTE:
(1) When tolerances are specified as all plus or all minus, double the values given.

TABLE 5
WIDTH TOLERANCES FOR EXTRUDED RECTANGULAR AND SQUARE BAR

Width, in.	Tolerances, Plus and Minus [Note (1)], in.
1.250 and under	0.005
Over 1.250 to 2 incl	0.008
Over 2 to 4 incl	0.012
Over 4 to 12 incl	0.30 [Note (2)]

NOTES:
(1) When tolerances are specified as all plus or all minus, double the values given.
(2) Percent of specified width expressed to the nearest 0.001 in.

TABLE 6
WIDTH TOLERANCES FOR NON-EXTRUDED RECTANGULAR AND SQUARE BAR, PLUS AND MINUS, in. [NOTE (1)]

	Width, in.		
Thickness	4 and Under	4 to 8 Incl	Over 8 to 12 Incl
Up to 0.500 incl	0.008	0.20 [Note (2)]	0.20 [Note (2) or (3)]
Over 0.500	1/32	1/32	1/32

NOTES:
(1) When tolerances are specified as all plus or all minus, double the values given.
(2) Percent of the specified width expressed to the nearest 0.001 in.
(3) If sawed, the tolerance is 1/32.

TABLE 7
LENGTH TOLERANCES FOR ROD, BAR, AND SHAPES (FULL-LENGTH PIECES SPECIFIC AND STOCK LENGTHS WITH OR WITHOUT ENDS)

Length Classification	Tolerances, All Plus, in. (Applicable Only to Full-Length Pieces)
Specific lengths	
Up to 6 ft	1/8
Over 6 to 15 ft	1/4
Over 15 ft	1/2
Specific lengths with ends	1
Stock lengths with or without ends	1

TABLE 8
SCHEDULE OF LENGTHS (SPECIFIC AND STOCK) WITH ENDS

Diameter or Distance Between Parallel Surfaces for Round Hexagonal, Octagonal Rod, and Square Bar, in.	Rectangular Bar Area [Note (1)], $in.^2$	Nominal Length, ft	Shortest Permissible Length [Note (2)], % of Nominal Length	Max Permissible Weight of Ends, % of Lot Weight
1/2 and under	0.250 and under	6 to 14 incl	75	20
Over 1/2 to 1 incl	Over 0.250 to 1 incl	6 to 14 incl	70	30
Over 1 to 1 1/2 incl	Over 1 to 2.25 incl	6 to 12 incl	60	40
Over 1 1/2 to 2 incl	Over 2.25 to 4 incl	6 to 12 incl	50	45
Over 2 to 3 incl	Over 4 to 9 incl	6 to 10 incl	40	50

NOTES:
(1) Width times thickness, disregarding any rounded corner or edges.
(2) Expressed to the nearest 1/2 ft.

1 in. Short lengths may be included as prescribed in Table 8.

13.6 *Straightness* — Unless otherwise specified in the contract or purchase order, the material shall be supplied in straight lengths. The deviation from absolute straightness of any longitudinal surface or edge shall not exceed the limitations prescribed in Table 9.

13.6.1 To determine compliance with this section, rod and bar shall, in case of disagreement, be checked by the following method:

13.6.1.1 Place the rod or bar on a level table so that the arc or departure from straightness is horizontal. Measure the maximum depth of arc to the nearest 1/32 in. using a steel scale and a straight edge.

TABLE 9
STRAIGHTNESS TOLERANCES APPLICABLE TO ANY LONGITUDINAL SURFACE OR EDGE

	Max Curvature (Depth of Arc), in.	Portion of Total Length in Which Depth of Arc is Measured, in.
Rod	1/2	120
Shapes	1/2	72
Bar (except hard rectangular bar listed in following line)	1/4	60
Hard rectangular bar 1/8 to 5/8 in. incl in thickness, having widths ranging from 2 to 6 in. incl	1/8	96

TABLE 10
RADIUS FOR SQUARE CORNERS

Specified Thickness, in.	Max Radius Permissible for Square Corners, in.
Up to 3/16 incl	1/64
Over 3/16 to 1 incl	1/32
Over 1	1/16

TABLE 11
RADIUS FOR ROUNDED CORNERS

	Nominal Radius of Corners, in.	
Specified Thickness, in.	For Widths Up to and Including 2× Thickness	For Widths More Than 2× Thickness
		Full rounded edges as given in 13.7.5
Up to 1/8 incl	1/64	
Over 1/8 to 3/16 incl	1/32	1/32
Over 3/16 to 1 incl	1/16	1/16
Over 1	1/8	1/8

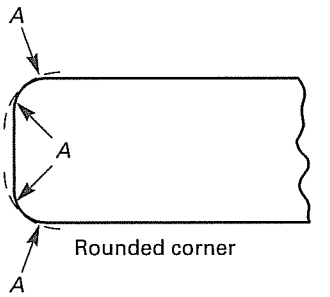

GENERAL NOTE: The arc shall not necessarily be tangent at points *A*, but the product shall be commercially free from sharp, rough, or projecting edges.

FIG. 1 ROUNDED CORNERS

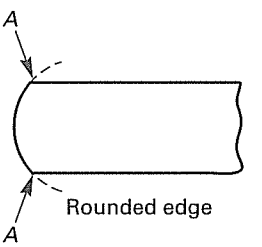

GENERAL NOTE: The arc shall be substantially symmetrical with the axis of the product. The corners *A* will usually be sharp, but shall not have rough or projecting edges.

FIG. 2 ROUNDED EDGE

TABLE 12
RADIUS FOR ROUNDED EDGE

Specified Thickness, in.	Nominal Radius of Rounded Edge, in.	Tolerance on Radius, Plus and Minus, in.
Up to 3/16 incl	1 1/4 × thickness	1/2 × thickness
Over 3/16	1 1/4 × thickness	1/4 × thickness

13.7 *Edge Contours*

13.7.1 *Angles* — All polygonal sections shall have substantially exact angles and sharp corners.

13.7.2 *Square Corners* — Unless otherwise specified in the contract or purchase order, bar shall be finished with commercially square corners with the maximum permissible radius shown in Table 10.

13.7.3 *Rounded Corners* — When specified in the contract or purchase order, bar may be finished with corners rounded as shown in Fig. 1 to a quarter circle with a radius as shown in Table 11. The tolerance on the radius shall be ±25%.

13.7.4 *Rounded Edge* — When specified in the contract or purchase order, bar may be finished with edges rounded as shown in Fig. 2, with a radius of curvature as shown in Table 12.

13.7.5 *Full Rounded Edge* — When specified in the contract or purchase order, bar may be finished with substantially uniform round edges, the radius of curvature being approximately one half the thickness of the product as shown in Fig. 3, but in no case to exceed one half the thickness of the product by more than 25%.

13.7.6 *Shapes* — Products with edge or corner contours other than described in 13.7.1 through 13.7.5 are classified as shapes.

NOTE 2 — For the purpose of determining conformance with the dimensional requirements prescribed in this specification, any measured value outside the specified limiting values for any dimension may be cause for rejection.

14. Specimen Preparation

14.1 *Microscopical Examination* — Specimen preparation shall be in accordance with Procedure A of Test Methods B 577.

15. Test Methods

15.1 Refer to Specification SB-249 for the appropriate mechanical test method.

15.2 Chemical composition shall, in case of disagreement, be determined as follows:

Element	ASTM Test Method
Copper	E 53
Phosphorus	E 62
Selenium	Refer to Annex, Specification B 216
Silver	E 478
Tellurium	Refer to Annex, Specification B 216

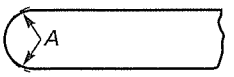

Full rounded edge

GENERAL NOTE: The arc shall not necessarily be tangent at points *A*, but shall be substantially symmetrical with the axis of the product, and the product shall be commercially free from sharp, rough, or projecting edges.

FIG. 3 FULL ROUNDED EDGE

15.2.1 Test method(s) for the determination of element(s) resulting from contractual or purchaser order agreement shall be as agreed upon between the manufacturer or supplier and the purchaser.

16. Keywords

16.1 bar; bus bar; copper; electrical conductors; embrittlement test; rod; shapes

APPENDIX

(Nonmandatory Information)

X. RESISTIVITY

X1.1 "Resistivity" is used in place of "conductivity." The value of 0.15328 $\Omega \cdot g/m^2$ at 20°C (68°F) is the international standard for the resistivity of annealed copper equal to 100% conductivity. This term means that a wire 1 m in length and weighing 1 g, would have a resistance of 0.15328 Ω. This is equivalent to a resistivity value of 875.20 $\Omega \cdot lb/mile^2$, which signifies the resistance of a wire 1 mile in length weighing 1 lb. It is also equivalent, for example, to 1.7241 μΩ/ cm of length of a bar 1 cm^2 in cross section. A complete discussion of this subject is contained in *NBS Handbook 100* of the National Institute of Standards Technology. Relationships that may be useful in connection with the values of resistivity prescribed in this specification are as shown in Table X1.1, each column containing equivalent expressions at 20°C (68°F).

TABLE X1.1
RESISTIVITY RELATIONSHIPS

Conductivity at 68°F, %	101.0	100.0	98.40	98.16	97.40	98.16	90.0	88.0
$\Omega \cdot g/m^2$	0.15176	0.15328	0.15577	0.15614	0.15737	0.15940	0.17031	0.17418
$\Omega \cdot lb/mile^2$	886.53	875.20	889.42	891.60	898.55	910.15	972.44	994.55
Ω·cmil/ft	10.268	10.371	10.539	10.565	10.648	10.785	11.523	11.785
$\Omega \cdot mm^2/m$	0.017070	0.017241	0.017521	0.017564	0.017701	0.017930	0.019156	0.019592
μΩ·in.	0.67207	0.67879	0.68981	0.69151	0.69690	0.70590	0.75421	0.77135
μΩ·cm	1.7070	1.7241	1.7521	1.7564	1.7701	1.7930	1.9157	1.9592

SPECIFICATION FOR ALUMINUM AND ALUMINUM-ALLOY SHEET AND PLATE

SB-209

(Identical with ASTM Specification B 209-96 for the alloys and tempers covered except for editorial differences in 4, 9, 11, 13, 14, and 16 and Tables 2 and 3 and the deletion of Tables 5 and 6. Certification and product marking have been made mandatory.)

1. Scope

1.1 This specification covers aluminum and aluminum-alloy flat sheet, coiled sheet, and plate, in the alloys (Note 1) and tempers shown in Tables 2 and 3, and in the following finishes:

1.1.1 plate in all alloys and sheet in heat-treatable alloys: mill finish; and

1.1.2 sheet in nonheat-treatable alloys: mill finish, one-side bright mill finish, standard one-side bright finish, and standard two-sides bright finish.

NOTE 1 — Throughout this specification use of the term *alloy* in the general sense includes aluminum as well as aluminum alloy.

NOTE 2 — See Specification B 632 for tread plate.

1.2 Alloy and temper designations are in accordance with ANSI H35.1. The equivalent Unified Numbering System alloy designations are those of Table 1 preceded by A9, for example, A91100 for aluminum 1100 in accordance with Practice E 527.

1.3 A complete metric companion to Specification B 209 has been developed — B 209 M; therefore, no metric equivalents are presented in this specification.

1.4 For acceptance criteria for inclusion of new aluminum and aluminum alloys in this specfication, see Annex A2.

2. Referenced Documents

2.1 The following documents of the issue in effect on the date of material purchase, unless otherwise noted, form a part of this specification to the extent referenced herein:

2.1.1 *ASTM Standards*

B 548 Method for Ultrasonic Inspection of Aluminum-Alloy Plate for Pressure Vessels

B 557 Test Methods of Tension Testing Wrought and Cast Aluminum- and Magnesium-Alloy Products

B 594 Practice for Ultrasonic Inspection of Aluminum-Alloy Wrought Products for Aerospace Applications

B 597 Practice for Heat Treatment of Aluminum Alloys

B 660 Practices for Packaging/Packing of Aluminum and Magnesium Products

B 666/B 666M Practice for Identification Marking of Aluminum Products

E 3 Methods of Preparation of Metallographic Specimens

E 29 Practice for Using Significant Digits in Test Data to Determine Conformance With Specifications

E 34 Test Methods for Chemical Analysis of Aluminum and Aluminum-Base Alloys

E 55 Practice for Sampling Wrought Nonferrous Metals and Alloys for Determination of Chemical Composition

E 101 Test Method for Spectrographic Analysis of Aluminum and Aluminum Alloys by the Point-to-Plane Technique

E 227 Test Method for Optical Emission Spectrometric Analysis of Aluminum and Aluminum Alloys by the Point-to-Plane Technique

E 290 Test Method for Semi-Guided Bend Test for Ductility of Metallic Materials

E 407 Test Methods for Microetching Metals and Alloys

E 527 Practice for Numbering Metals and Alloys (UNS)

E 607 Test Method for Optical Emission Spectrometric Analysis of Aluminum and Aluminum Alloys by the Point-to-Plane Technique, Nitrogen Atmosphere

E 716 Practices for Sampling Aluminum and Aluminum Alloys for Spectrochemical Analysis

E 1004 Test Method for Electromagnetic (Eddy-Current) Measurements of Electrical Conductivity

E 1251 Test Method for Optical Emission Spectrometric Analysis of Aluminum and Aluminum Alloys by the

TABLE 1
CHEMICAL COMPOSITION LIMITS [NOTES (1), (2), (3)]

Alloy	Silicon	Iron	Copper	Manganese	Magnesium	Chromium	Zinc	Titanium	Other Elements [Note (4)] Each	Other Elements [Note (4)] Total [Note (5)]	Aluminum
1060	0.25	0.35	0.05	0.03	0.03	...	0.05	0.03	0.03[Note (6)]	...	99.60 min. [Note (7)]
1100	0.95 Si + Fe		0.05–0.20	0.05	...	...	0.10	...	0.05	0.15	99.00 min. [Note (7)]
3003	0.6	0.7	0.05–0.20	1.0–1.5	...	...	0.10	...	0.05	0.15	Remainder
Alclad 3003	3003 clad with 7072										
3004	0.30	0.7	0.25	1.0–1.5	0.8–1.3	...	0.25	...	0.05	0.15	Remainder
Alclad 3004	3004 clad with 7072										
5052	0.25	0.40	0.10	0.10	2.2–2.8	0.15–0.35	0.10	...	0.05	0.15	Remainder
5083	0.40	0.40	0.10	0.40–1.0	4.0–4.9	0.05–0.25	0.25	0.15	0.05	0.15	Remainder
5086	0.40	0.50	0.10	0.20–0.7	3.5–4.5	0.05–0.25	0.25	0.15	0.05	0.15	Remainder
5154	0.25	0.40	0.10	0.10	3.1–3.9	0.15–0.35	0.20	0.20	0.05	0.15	Remainder
5254	0.45 Si + Fe		0.05	0.01	3.1–3.9	0.15–0.35	0.20	0.05	0.05	0.15	Remainder
5454	0.25	0.40	0.10	0.50–1.0	2.4–3.0	0.05–0.20	0.25	0.20	0.05	0.15	Remainder
5456	0.25	0.40	0.10	0.50–1.0	4.7–5.5	0.05–0.20	0.25	0.20	0.05	0.15	Remainder
5652	0.40 Si + Fe		0.04	0.01	2.2–2.8	0.15–0.35	0.10	...	0.05	0.15	Remainder
6061	0.40–0.8	0.7	0.15–0.40	0.15	0.8–1.2	0.04–0.35	0.25	0.15	0.05	0.15	Remainder
Alclad 6061	6061 clad with 7072										
7072 [Note (8)]	0.7 Si + Fe		0.10	0.10	0.10	...	0.8–1.3	...	0.05	0.15	Remainder

NOTES:

(1) Limits are in weight percent maximum unless shown as a range or stated otherwise.

(2) Analysis shall regularly be made only for the elements specified in this Table. If, however, the presence of other elements is suspected or indicated in amounts greater than the specified limits, further analysis shall be made to determine that these elements are not present in excess of the specified limits.

(3) For purposes of determining conformance to these limits, an observed value or a calculated value attained from analysis shall be rounded to the nearest unit in the last righthand place of figures used in expressing the specified limit in accordance with the rounding-off method of Practice E 29.

(4) Includes listed elements for which no specific limit is shown.

(5) Other Elements — Total shall be the sum of unspecified metallic elements 0.010% or more, rounded to the second decimal before determining the sum.

(6) Vanadium 0.05 max.

(7) The aluminum content shall be calculated by subtracting from 100.00% the sum of all metallic elements present in amounts of 0.010% or more each, rounded to the second decimal before determining the sum.

(8) Composition of cladding alloy as applied during the course of manufacture. Samples from finished sheet or plate shall not be required to conform to these limits.

Argon Atmosphere, Point-to-Plane, Unipolar Self-Initiating Capacitor Discharge
G 47 Test Method for Determining Susceptibility to Stress-Corrosion Cracking of High Strength Aluminum Alloy Products
G 66 Method for Visual Assessment of Exfoliation Corrosion Susceptibility of 5XXX Series Aluminum Alloys (Asset Test)
Method of Test for Exfoliation Corrosion Susceptibility in 7XXX Series Copper-Containing Aluminum Alloys (EXCO Test) (G34-72)

2.1.2 *ANSI Standards*
H35.1 Alloy and Temper Designation Systems for Aluminum
H35.2 Dimensional Tolerances for Aluminum Mill Products

2.1.3 *Military Standard*
MIL-STD-129 Marking for Shipment and Storage

2.1.4 *Military Specification*
MIL-H-6088 Heat Treatment of Aluminum Alloys

2.1.5 *Federal Standard*
Fed. Std. No.123 Marking for Shipment (Civil Agencies)

3. Terminology

3.1 *Definitions*

3.1.1 *sheet* — a rolled product that is rectangular in cross section with thickness less than 0.250 in. but not less than 0.006 in. and with slit, sheared, or sawed edges

3.1.1.1 *alclad sheet* — composite sheet comprised of an aluminum-alloy core having on both surfaces (if on one side only, alclad one-side sheet) a metallurgically bonded aluminum or aluminum-alloy coating that is anodic to the core, thus electrolytically protecting the core against corrosion

3.1.1.2 *coiled sheet* — sheet in coils with slit edges

3.1.1.3 *flat sheet* — sheet with sheared, slit, or sawed edges, which has been flattened or leveled

3.1.1.4 *mill finish sheet* — sheet having a nonuniform finish which may vary from sheet to sheet and within a sheet, and may not be entirely free from stains or oil

3.1.1.5 *one-side bright mill finish sheet* — sheet having a moderate degree of brightness on one side, and a mill finish on the other

3.1.1.6 *standard one-side bright finish sheet* — sheet having a uniform bright finish on one side, and a mill finish on the other

3.1.1.7 *standard two-sides bright finish sheet* — sheet having a uniform bright finish on both sides

3.1.2 *plate* — a rolled product that is rectangular in cross section with thickness not less than 0.250 in., and with sheared or sawed edges

3.1.2.1 *alclad plate* — composite plate comprised of an aluminum-alloy core having on both surfaces (if on one side only, alclad one-side plate) a metallurgically bonded aluminum or aluminum alloy coating that is anodic to the core, thus electrolytically protecting the core against corrosion

3.1.2.2 *parent coil or plate* — a coil sheet or a plate that has been processed to final temper as a single unit and subsequently cut into two or more smaller coils or individual sheets or into smaller plates to provide the required width or length, or both

3.1.3 *producer* — the primary manufacturer of the material

3.1.4 *supplier* — includes only the category of jobbers and distributors as distinct from producers

3.2 *Description of Term Specific to This Standard*

3.2.1 *capable of* — The term *capable of* as used in this specification means that the test need not be performed by the producer of the material. However, should testing by the purchaser establish that the material does not meet these requirements, the material shall be subject to rejection.

4. Ordering Information

4.1 Orders for material to this specification shall include the following information:

4.1.1 this specification designation (which includes the number, the year, and the revision letter, if applicable);

4.1.2 quantity in pieces or pounds;

4.1.3 alloy (7.1);

4.1.4 temper (9.1);

4.1.5 finish for sheet in nonheat-treatable alloys (Section 1);

4.1.6 for sheet, whether flat or coiled; and

4.1.7 dimensions (thickness, width, and length or coil size).

4.2 Additionally, orders for material to this specification shall include the following information when required by the purchaser:

4.2.1 whether heat treatment in accordance with Practice B 597 is required (8.2);

4.2.2 whether bend tests are required (10.1);

4.2.3 whether ultrasonic inspection for aerospace or pressure vessel applications is required (Section 13);

4.2.4 whether inspection or witness of inspection and tests by the purchaser's representative is required prior to material shipment (14.1); and

4.2.5 whether Practices B 660 applies and, if so, the levels of preservation, packaging, and packing required (17.3).

5. Responsibility for Quality Assurance

5.1 *Responsibility for Inspection and Tests* — Unless otherwise specified in the contract or purchase order, the producer is responsible for the performance of all inspection and test requirements specified herein. The producer may use his own or any other suitable facilities for the performance of the inspection and test requirements specified herein, unless disapproved by the purchaser in the order or at the time of contract signing. The purchaser shall have the right to perform any of the inspections and tests set forth in this specification where such inspections are deemed necessary to ensure that material conforms to prescribed requirements.

5.2 *Lot Definition* — An inspection lot shall be defined as follows.

5.2.1 For heat-treated tempers, an inspection lot shall consist of an identifiable quantity of material of the same mill form, alloy, temper, and thickness traceable to a heat-treat lot or lots, and subjected to inspection at one time.

5.2.2 For nonheat-treated tempers, an inspection lot shall consist of an identifiable quantity of material of the same mill form, alloy, temper, and thickness subjected to inspection at one time.

6. General Quality

6.1 Unless otherwise specified, the material shall be supplied in the mill finish and shall be uniform as defined by the requirements of this specification and shall be commercially sound. Any requirement not so covered is subject to negotiation between producer and purchaser.

6.2 Each sheet and plate shall be examined to determine conformance to this specification with respect to general quality and identification marking. On approval of the purchaser, however, the producer may use a system of statistical quality control for such examinations.

7. Chemical Composition

7.1 *Limits* — The sheet and plate shall conform to the chemical composition limits specified in Table 1. Conformance shall be determined by the producer by analyzing samples taken at the time the ingots are poured, or samples taken from the finished or semifinished product. If the producer has determined the chemical composition of the material during the course of manufacture, he shall not be required to sample and analyze the finished product.

NOTE 3 — It is standard practice in the United States aluminum industry to determine conformance to the chemical composition limits prior to further processing of ingots into wrought products. Due to the continuous nature of the process, it is not practical to keep a specific ingot analysis identified with a specific quantity of finished material.

7.2 *Number of Samples* — The number of samples taken for determination of chemical composition shall be as follows.

7.2.1 When samples are taken at the time the ingots are poured, at least one sample shall be taken for each group of ingots poured simultaneously from the same source of molten metal.

7.2.2 When samples are taken from the finished or semifinished product, a sample shall be taken to represent each 4,000 lb, or fraction thereof, of material in the lot, except that not more than one sample shall be required per piece.

7.3 *Methods of Sampling* — Samples for determination of chemical composition shall be taken in accordance with one of the following methods.

7.3.1 Samples for chemical analysis shall be taken by drilling, sawing, milling, turning, or clipping a representative piece or pieces to obtain a prepared sample of not less than 75 g. Sampling shall be in accordance with Practice E 55.

7.3.2 Sampling for spectrochemical analysis shall be in accordance with Practices E 716. Samples for other methods of analysis shall be suitable for the form of material being analyzed and the type of analytical method used.

NOTE 4 — It is difficult to obtain a reliable analysis of each of the components of clad materials using material in its finished state. A reasonably accurate determination of the core composition can be made if the cladding is substantially removed prior to analysis. The cladding composition is more difficult to determine because of the relatively thin layer and because of diffusion of core elements to the cladding. The correctness of cladding alloy used can usually be verified by a combination of metallographic examination and spectrochemical analysis of the surface at several widely separated points.

7.4 *Methods of Analysis* — The determination of chemical composition shall be made in accordance with suitable chemical (Test Methods E 34), or spectrochemical (Test Methods E 101, E 227, E 607, and E 1251) methods. Other methods may be used only when no published ASTM method is available. In case of dispute, the

methods of analysis shall be agreed upon between the producer and purchaser.

8. Heat Treatment

8.1 Unless specified in 8.2, producer or supplier heat treatment for the applicable tempers in Table 3 shall be in accordance with MIL-H-6088.

8.2 When specified, heat treatment of applicable tempers in Table 3 shall be in accordance with Practice B 597.

9. Tensile Properties of Material as Supplied

9.1 *Limits* — The sheet and plate shall conform to the requirements for tensile properties as specified in Tables 2 and 3 for nonheat-treatable and heat-treatable alloys, respectively.

9.2 *Number of Samples* — One sample shall be taken from each end of each parent coil, or parent plate, but no more than one sample per 2,000 lb of sheet or 4,000 lb of plate, or part thereof, in a lot shall be required. Other procedures for selecting samples may be employed if agreed upon between the producer and purchaser.

9.3 *Test Specimens* — Geometry of test specimens and the location in the product from which they are taken shall be as specified in Test Methods B 557.

9.4 *Test Methods* — The tension test shall be made in accordance with Test Methods B 557.

10. Bend Properties

10.1 *Limits* — Sheet and plate shall be capable of being bent cold through an angle of 180 deg. around a pin having a diameter equal to *N* times the thickness of the sheet or plate without cracking, the value of N being as prescribed in Table 2 for the different alloys, tempers, and thicknesses. The test need not be conducted unless specified on the purchase order.

10.2 *Test Specimens* — When bend tests are made, the specimens for sheet shall be the full thickness of the material, approximately $\frac{3}{4}$ in. in width, and when practical, at least 6 in. in length. Such specimens may be taken in any direction and their edges may be rounded to a radius of approximately $\frac{1}{16}$ in. if desired. For sheet less than $\frac{3}{4}$ in. in width, the specimens should be the full width of the material.

10.3 *Test Methods* — The bend tests shall be made in accordance with Test Method E 290 except as stated otherwise in 10.2.

11. Cladding

11.1 Preparatory to rolling alclad sheet and plate to the specified thickness, the aluminum or aluminum-alloy plates which are bonded to the alloy ingot or slab shall be of the composition shown in Table 1 and shall each have a thickness not less than that shown in Table 4 for the alloy specified.

11.2 When the thickness of the cladding is to be determined on finished material, not less than one transverse sample approximately $\frac{3}{4}$ in. in length shall be taken from each edge and from the center width of the material. Samples shall be mounted to expose a transverse cross section and shall be polished for examination with a metallurgical microscope. Using 100× magnification, the maximum and minimum cladding thickness on each surface shall be measured in each of five fields approximately 0.1 in. apart for each sample. The average of the ten values (five minima plus five maxima) on each sample surface is the average cladding thickness and shall meet the minimum average and, when applicable, the maximum average specified in Table 4.

12. Dimensional Tolerances

12.1 *Thickness* — The thickness of flat sheet, coiled sheet, and plate shall not vary from that specified by more than the respective permissible variations prescribed in Tables 3.1, 3.2 and 3.14 of ANSI H35.2. Permissible variations in thickness of plate specified in thicknesses exceeding 6 in. shall be the subject of agreement between the purchaser and the producer or the supplier at the time the order is placed.

12.2 *Length, Width, Lateral Bow, Squareness, and Flatness* — Coiled sheet shall not vary in width or in lateral bow from that specified by more than the permissible variations prescribed in Tables 3.6 and 3.7, respectively, of ANSI H35.2. Flat sheet and plate shall not vary in width, length, lateral bow, squareness, or flatness by more than the permissible variations prescribed in the following tables of ANSI H35.2 except that where the tolerances for sizes ordered are not covered by this standard the permissible variations shall be the subject of agreement between the purchaser and the producer or the supplier at the time the order is placed.

Table No.	Title
3.3	Width, sheared flat sheet and plate
3.4	Width and length, sawed flat sheet and plate
3.5	Length, sheared flat sheet and plate
3.8	Lateral bow, flat sheet and plate
3.9	Squareness, flat sheet and plate
3.12	Flatness, flat sheet
3.13	Flatness, sawed or sheared plate

TABLE 2
MECHANICAL PROPERTY LIMITS FOR NONHEAT-TREATABLE ALLOY [NOTES (1), (2)]

Temper	Specified Thickness, in.	Tensile Strength, ksi		Yield Strength (0.2% Offset), ksi		Elongation in 2 in. or 4 × Dia, Min., %	Bend Dia Factor, *N*
		Min.	Max	Min.	Max		
			Aluminum 1060				
O	0.051–3.000	8.0	14.0	2.5	...	25	...
H12	0.051–2.000	11.0	16.0	9.0	...	12	...
H14	0.051–1.000	12.0	17.0	10.0	...	10	...
H112	0.250–0.499	11.0	...	7.0	...	10	...
	0.500–1.000	10.0	...	5.0	...	20	...
	1.001–3.000	9.0	...	4.0	...	25	...
			Aluminum 1100				
O	0.006–0.019	11.0	15.5	3.5	...	15	0
	0.020–0.031	11.0	15.5	3.5	...	20	0
	0.032–0.050	11.0	15.5	3.5	...	25	0
	0.051–0.249	11.0	15.5	3.5	...	30	0
	0.250–3.000	11.0	15.5	3.5	...	28	0
H12	0.051–0.113	14.0	19.0	11.0	...	8	0
	0.114–0.499	14.0	19.0	11.0	...	9	0
	0.500–2.000	14.0	19.0	11.0	...	12	...
H14	0.009–0.012	16.0	21.0	14.0	...	1	0
	0.013–0.019	16.0	21.0	14.0	...	2	0
	0.020–0.031	16.0	21.0	14.0	...	3	0
	0.032–0.050	16.0	21.0	14.0	...	4	0
	0.051–0.113	16.0	21.0	14.0	...	5	0
	0.114–0.499	16.0	21.0	14.0	...	6	0
	0.500–1.000	16.0	21.0	14.0	...	10	...
H112	0.250–0.499	13.0	...	7.0	...	9	...
	0.500–2.000	12.0	...	5.0	...	14	...
	2.001–3.000	11.5	...	4.0	...	20	...
			Alloy 3003				
O	0.006–0.007	14.0	19.0	5.0	...	14	0
	0.008–0.012	14.0	19.0	5.0	...	18	0
	0.013–0.031	14.0	19.0	5.0	...	20	0
	0.032–0.050	14.0	19.0	5.0	...	23	0
	0.051–0.249	14.0	19.0	5.0	...	25	0
	0.250–3.000	14.0	19.0	5.0	...	23	...
H12	0.017–0.019	17.0	23.0	12.0	...	3	0
	0.020–0.031	17.0	23.0	12.0	...	4	0
	0.032–0.050	17.0	23.0	12.0	...	5	0
	0.051–0.113	17.0	23.0	12.0	...	6	0
	0.114–0.161	17.0	23.0	12.0	...	7	0
	0.162–0.249	17.0	23.0	12.0	...	8	0
	0.250–0.499	17.0	23.0	12.0	...	9	...
	0.500–2.000	17.0	23.0	12.0	...	10	...
H14	0.009–0.012	20.0	26.0	17.0	...	1	0
	0.013–0.019	20.0	26.0	17.0	...	2	0
	0.020–0.031	20.0	26.0	17.0	...	3	0
	0.032–0.050	20.0	26.0	17.0	...	4	0
	0.051–0.113	20.0	26.0	17.0	...	5	0

TABLE 2 (CONT'D)
MECHANICAL PROPERTY LIMITS FOR NONHEAT-TREATABLE ALLOY [NOTES (1), (2)]

Temper	Specified Thickness, in.	Tensile Strength, ksi Min.	Tensile Strength, ksi Max	Yield Strength (0.2% Offset), ksi Min.	Yield Strength (0.2% Offset), ksi Max	Elongation in 2 in. or 4 × Dia, Min., %	Bend Dia Factor, *N*
			Alloy 3003 (Cont'd)				
	0.114–0.161	20.0	26.0	17.0	...	6	2
	0.162–0.249	20.0	26.0	17.0	...	7	2
	0.250–0.499	20.0	26.0	17.0	...	8	...
	0.500–1.000	20.0	26.0	17.0	...	10	...
H112	0.250–0.499	17.0	...	10.0	...	8	...
	0.500–2.000	15.0	...	6.0	...	12	...
	2.001–3.000	14.5	...	6.0	...	18	...
			Alclad Alloy 3003				
O	0.006–0.007	13.0	18.0	4.5	...	14	...
	0.008–0.012	13.0	18.0	4.5	...	18	...
	0.013–0.031	13.0	18.0	4.5	...	20	...
	0.032–0.050	13.0	18.0	4.5	...	23	...
	0.051–0.249	13.0	18.0	4.5	...	25	...
	0.250–0.499	13.0	18.0	4.5	...	23	...
	0.500–3.000	14.0 [Note (3)]	19.0 [Note (3)]	5.0 [Note (3)]	...	23	...
H12	0.017–0.031	16.0	22.0	11.0	...	4	...
	0.032–0.050	16.0	22.0	11.0	...	5	...
	0.051–0.113	16.0	22.0	11.0	...	6	...
	0.114–0.161	16.0	22.0	11.0	...	7	...
	0.162–0.249	16.0	22.0	11.0	...	8	...
	0.250–0.499	16.0	22.0	11.0	...	9	...
	0.500–2.000	17.0 [Note (3)]	23.0 [Note (3)]	12.0 [Note (3)]	...	10	...
H14	0.009–0.012	19.0	25.0	16.0	...	1	...
	0.013–0.019	19.0	25.0	16.0	...	2	...
	0.020–0.031	19.0	25.0	16.0	...	3	...
	0.032–0.050	19.0	25.0	16.0	...	4	...
	0.051–0.113	19.0	25.0	16.0	...	5	...
	0.114–0.161	19.0	25.0	16.0	...	6	...
	0.162–0.249	19.0	25.0	16.0	...	7	...
	0.250–0.499	19.0	25.0	16.0	...	8	...
	0.500–1.000	20.0 [Note (3)]	26.0 [Note (3)]	17.0 [Note (3)]	...	10	...
H112	0.250–0.499	16.0	...	9.0	...	8	...
	0.500–2.000	15.0 [Note (3)]	...	6.0 [Note (3)]	...	12	...
	2.001–3.000	14.5 [Note (3)]	...	6.0 [Note (3)]	...	18	...
			Alloy 3004				
O	0.006–0.007	22.0	29.0	8.5	...	...	...
	0.008–0.019	22.0	29.0	8.5	...	10	0
	0.020–0.031	22.0	29.0	8.5	...	14	0
	0.032–0.050	22.0	29.0	8.5	...	16	0
	0.051–0.249	22.0	29.0	8.5	...	18	0
	0.250–3.000	22.0	29.0	8.5	...	16	...
H32	0.051–0.113	28.0	35.0	21.0	...	5	2
	0.114–2.000	28.0	35.0	21.0	...	6	...
H34	0.051–0.113	32.0	38.0	25.0	...	4	4
	0.114–1.000	32.0	38.0	25.0	...	5	...
H112	0.250–3.000	23.0	...	9.0	...	7	...

TABLE 2 (CONT'D)
MECHANICAL PROPERTY LIMITS FOR NONHEAT-TREATABLE ALLOY [NOTES (1), (2)]

Temper	Specified Thickness, in.	Tensile Strength, ksi		Yield Strength (0.2% Offset), ksi		Elongation in 2 in. or 4 × Dia, Min., %	Bend Dia Factor, *N*
		Min.	Max	Min.	Max		
			Alclad Alloy 3004				
O	0.051–0.249	21.0	28.0	8.0	...	18	...
	0.250–0.499	21.0	28.0	8.0	...	16	...
	0.500–3.000	22.0 [Note (3)]	29.0 [Note (3)]	8.5 [Note (3)]	...	16	...
H32	0.051–0.113	27.0	34.0	20.0	...	5	...
	0.114–0.249	27.0	34.0	20.0	...	6	...
	0.250–0.499	27.0	34.0	20.0	...	6	...
	0.500–2.000	28.0 [Note (3)]	35.0 [Note (3)]	21.0 [Note (3)]	...	6	...
H34	0.051–0.113	31.0	37.0	24.0	...	4	...
	0.114–0.249	31.0	37.0	24.0	...	5	...
	0.250–0.499	31.0	37.0	24.0	...	5	...
	0.500–1.000	32.0 [Note (3)]	38.0 [Note (3)]	25.0 [Note (3)]	...	5	...
H112	0.250–0.499	22.0	...	8.5	...	7	...
	0.500–3.000	23.0 [Note (3)]	...	9.0 [Note (3)]	...	7	...
			Alloy 5052				
O	0.051–0.113	25.0	31.0	9.5	...	19	0
	0.114–0.249	25.0	31.0	9.5	...	20	0
	0.250–3.000	25.0	31.0	9.5	...	18	...
H32	0.051–0.113	31.0	38.0	23.0	...	7	2
	0.114–0.249	31.0	38.0	23.0	...	9	3
	0.250–0.499	31.0	38.0	23.0	...	11	...
	0.500–2.000	31.0	38.0	23.0	...	12	...
H34	0.051–0.113	34.0	41.0	26.0	...	6	3
	0.114–0.249	34.0	41.0	26.0	...	7	4
	0.250–1.000	34.0	41.0	26.0	...	10	...
H112	0.250–0.499	28.0	...	16.0	...	7	...
	0.500–2.000	25.0	...	9.5	...	12	...
	2.001–3.000	25.0	...	9.5	...	16	...
			Alloy 5083				
O	0.051–1.500	40.0	51.0	18.0	29.0	16	...
	1.501–3.000	39.0	50.0	17.0	29.0	16	...
	3.001–4.000	38.0	...	16.0	...	16	...
	4.001–5.000	38.0	...	16.0	...	14	...
	5.001–7.000	37.0	...	15.0	...	14	...
	7.001–8.000	36.0	...	14.0	...	12	...
H321	0.188–1.500	44.0	56.0	31.0	43.0	12	...
	1.501–3.000	41.0	56.0	29.0	43.0	12	...
H112	0.250–1.500	40.0	...	18.0	...	12	...
	1.501–3.000	39.0	...	17.0	...	12	...
			Alloy 5086				
O	0.051–0.249	35.0	44.0	14.0	...	18	...
	0.250–2.000	35.0	44.0	14.0	...	16	...
H32	0.051–0.249	40.0	47.0	28.0	...	8	...
	0.250–2.000	40.0	47.0	28.0	...	12	...

TABLE 2 (CONT'D)
MECHANICAL PROPERTY LIMITS FOR NONHEAT-TREATABLE ALLOY [NOTES (1), (2)]

Temper	Specified Thickness, in.	Tensile Strength, ksi Min.	Tensile Strength, ksi Max	Yield Strength (0.2% Offset), ksi Min.	Yield Strength (0.2% Offset), ksi Max	Elongation in 2 in. or 4 × Dia, Min., %	Bend Dia Factor, *N*
			Alloy 5086 (Cont'd)				
H34	0.051–0.249	44.0	51.0	34.0	...	6	...
	0.250–1.000	44.0	51.0	34.0	...	10	...
H112	0.188–0.499	36.0	...	18.0	...	8	...
	0.500–1.000	35.0	...	16.0	...	10	...
	1.001–2.000	35.0	...	14.0	...	14	...
	2.001–3.000	34.0	...	14.0	...	14	...
H116 [Note (4)]	0.063–0.249	40.0	...	28.0	...	8	...
	0.250–0.499	40.0	...	28.0	...	10	...
	0.500–1.250	40.0	...	28.0	...	10	...
	1.251–2.000	40.0	...	28.0	...	10	...
			Alloy 5154				
O	0.051–0.113	30.0	41.0	11.0	...	16	...
	0.114–3.000	30.0	41.0	11.0	...	18	...
H32	0.051–0.249	36.0	43.0	26.0	...	8	...
	0.250–2.000	36.0	43.0	26.0	...	12	...
H34	0.051–0.161	39.0	46.0	29.0	...	6	...
	0.162–0.249	39.0	46.0	29.0	...	7	...
	0.250–1.000	39.0	46.0	29.0	...	10	...
H112	0.250–0.499	32.0	...	18.0	...	8	...
	0.500–2.000	30.0	...	11.0	...	11	...
	2.001–3.000	30.0	...	11.0	...	15	...
			Alloy 5254				
O	0.051–0.113	30.0	41.0	11.0	...	16	...
	0.114–3.000	30.0	41.0	11.0	...	18	...
H32	0.051–0.249	36.0	43.0	26.0	...	8	...
	0.250–2.000	36.0	43.0	26.0	...	12	...
H34	0.051–0.161	39.0	46.0	29.0	...	6	...
	0.162–0.249	39.0	46.0	29.0	...	7	...
	0.250–1.000	39.0	46.0	29.0	...	10	...
H112	0.250–0.499	32.0	...	18.0	...	8	...
	0.500–2.000	30.0	...	11.0	...	11	...
	2.001–3.000	30.0	...	11.0	...	15	...
			Alloy 5454				
O	0.051–0.113	31.0	41.0	12.0	...	16	...
	0.114–3.000	31.0	41.0	12.0	...	18	...
H32	0.051–0.249	36.0	44.0	26.0	...	8	...
	0.250–2.000	36.0	44.0	26.0	...	12	...
H34	0.051–0.161	39.0	47.0	29.0	...	6	...
	0.162–0.249	39.0	47.0	29.0	...	7	...
	0.250–1.000	39.0	47.0	29.0	...	10	...
H112	0.250–0.499	32.0	...	18.0	...	8	...
	0.500–2.000	31.0	...	12.0	...	11	...
	2.001–3.000	31.0	...	12.0	...	15	...

TABLE 2 (CONT'D)
MECHANICAL PROPERTY LIMITS FOR NONHEAT-TREATABLE ALLOY [NOTES (1), (2)]

Temper	Specified Thickness, in.	Tensile Strength, ksi		Yield Strength (0.2% Offset), ksi		Elongation in 2 in. or 4 × Dia, Min., %	Bend Dia Factor, *N*
		Min.	Max	Min.	Max		
			Alloy 5456				
O	0.051–1.500	42.0	53.0	19.0	30.0	16	...
	1.501–3.000	41.0	52.0	18.0	30.0	16	...
	3.001–5.000	40.0	...	17.0	...	14	...
	5.001–7.000	39.0	...	16.0	...	14	...
	7.001–8.000	38.0	...	15.0	...	12	...
H321	0.188–0.499	46.0	59.0	33.0	46.0	12	...
	0.500–1.500	44.0	56.0	31.0	44.0	12	...
	1.501–3.000	41.0	54.0	29.0	43.0	12	...
H112	0.250–1.500	42.0	...	19.0	...	12	...
	1.501–3.000	41.0	...	18.0	...	12	...
			Alloy 5652				
O	0.051–0.113	25.0	31.0	9.5	...	19	0
	0.114–0.249	25.0	31.0	9.5	...	20	0
	0.250–3.000	25.0	31.0	9.5	...	18	...
H32	0.051–0.113	31.0	38.0	23.0	...	7	2
	0.114–0.249	31.0	38.0	23.0	...	9	3
	0.250–0.499	31.0	38.0	23.0	...	11	...
	0.500–2.000	31.0	38.0	23.0	...	12	...
H34	0.051–0.113	34.0	41.0	26.0	...	6	3
	0.114–0.249	34.0	41.0	26.0	...	7	4
	0.250–1.000	34.0	41.0	26.0	...	10	...
H112	0.250–0.499	28.0	...	16.0	...	7	...
	0.500–2.000	25.0	...	9.5	...	12	...
	2.001–3.000	25.0	...	9.5	...	16	...

NOTES:
(1) To determine conformance to this specification each value for tensile strength and for yield strength shall be rounded to the nearest 0.1 ksi and each value for elongation to the nearest 0.5%, both in accordance with the rounding method of Practice E 29.
(2) The basis for establishment of mechanical property limits is shown in Annex A1.
(3) The tension test specimen from plate 0.500 in. and thicker is machined from the core and does not include the cladding alloy.
(4) The -H116 temper designation now also applies to products previously designated -H117.

12.3 *Sampling for Inspection* — Examination for dimensional conformance shall be made to ensure conformance to the tolerance specified.

13. Internal Quality

13.1 When specified by the purchaser at the time of placing the order, plate 0.500 in. in thickness and greater shall be tested in accordance with Method B 548. In such cases the material will be subject to rejection if the following limits are exceeded unless it is determined by the puchaser that the area of the plate containing significant discontinuities will be removed during the subsequent fabrication process or that the plate may be repaired by welding:

13.1.1 if the longest dimension of the marked area representing a discontinuity causing a complete loss of back reflection (95% or greater) exceeds 1.0 in.;

13.1.2 if the length of the marked area representing a discontinuity causing an isolated ultrasonic indication without a complete loss of back reflection (95% or greater) exceeds 3.0 in.; and

TABLE 3
TENSILE PROPERTY LIMITS FOR HEAT-TREATABLE ALLOYS [NOTES (1), (2)]

Temper	Specified Thickness, in.	Tensile Strength, ksi		Yield Strength (0.2% Offset), ksi		Elongation in 2 in. or 4 × Dia, Min., %	Bend Dia Factor, N
		Min.	Max	Min.	Max		
			Alloy 6061				
T4	0.051–0.249	30.0	...	16.0	...	16	3
T451 [Note (3)]	0.250–0.499	30.0	...	16.0	...	18	4
	0.500–1.000	30.0	...	16.0	...	18	...
	1.001–3.000	30.0	...	16.0	...	16	...
T6	0.051–0.064	42.0	...	35.0	...	10	4
	0.065–0.128	42.0	...	35.0	...	10	5
	0.129–0.249	42.0	...	35.0	...	10	6
T651 [Note (3)]	0.250–0.499	42.0	...	35.0	...	10	7
	0.500–1.000	42.0	...	35.0	...	9	...
	1.001–2.000	42.0	...	35.0	...	8	...
	2.001–4.000	42.0	...	35.0	...	6	...
	4.001–6.000 [Note (4)]	40.0	...	35.0	...	6	...
			Alclad Alloy 6061				
T4	0.051–0.249	27.0	...	14.0	...	16	...
T451 [Note (3)]	0.250–0.499	27.0	...	14.0	...	18	...
	0.500–1.000	30.0 [Note (5)]	...	16.0 [Note (5)]	...	18	...
	1.001–3.000	30.0 [Note (5)]	...	16.0 [Note (5)]	...	16	...
T6	0.051–0.249	38.0	...	32.0	...	10	...
T651 [Note (3)]	0.250–0.499	38.0	...	32.0	...	10	...
	0.500–1.000	42.0 [Note (5)]	...	35.0 [Note (5)]	...	9	...
	1.001–2.000	42.0 [Note (5)]	...	35.0 [Note (5)]	...	8	...
	2.001–4.000	42.0 [Note (5)]	...	35.0 [Note (5)]	...	6	...
	4.001–5.000	40.0 [Note (5)]	...	35.0 [Note (5)]	...	6	...

NOTES:
(1) To determine conformance to this specification, each value for tensile strength and for yield strength shall be rounded to the nearest 0.1 ksi and each value for elongation to the nearest 0.5%, both in accordance with the rounding method of Practice E 29.
(2) The basis for establishment of mechanical property limits is shown in Annex A1.
(3) For stress-relieved tempers (T351, T451, T651, T7351, T7651, and T851), characteristics and properties other than those specified may differ somewhat from the corresponding characteristics and properties of material in the basic temper.
(4) The properties for this thickness apply only to the T651 temper.
(5) The tension test specimen from plate 0.500 in. and thicker is machined from the core and does not include the cladding.

13.1.3 if each of two marked areas representing two adjacent discontinuities causing isolated ultrasonic indications without a complete loss of back reflection (95% or greater) is longer than 1.0 in., and if they are located within 3.0 in. of each other.

14. Source Inspection

14.1 If the purchaser desires that his representative inspect or witness the inspection and testing of the material prior to shipment, such agreement shall be made by the purchaser and producer as part of the purchase contract.

14.2 When such inspection or witness of inspection and testing is agreed upon, the producer shall afford the purchaser's representative all reasonable facilities to satisfy him that the material meets the requirements of this specification. Inspection and tests shall be conducted so there is no unnecssary interference with the producer's operations.

TABLE 4
COMPONENTS OF CLAD PRODUCTS

Alloy	Component Alloys [Note (1)]		Total Composite Thickness of Finished Sheet and Plate, in.	Sides Clad	Cladding Thickness Per Side, % of Composite Thickness		
						Average [Note (2)]	
	Core	Cladding			Nominal	Min.	Max
Alclad 3003	3003	7072	All	Both	5	4	6 [Note (3)]
Alclad 3004	3004	7072	All	Both	5	4	6 [Note (3)]
Alclad 6061	6061	7072	All	Both	5	4	6 [Note (3)]

NOTES:
(1) Cladding composition is applicable only to the aluminum alloy bonded to the alloy ingot or slab preparatory to rolling to the specified composite product. The composition of the cladding may be altered subsequently by diffusion between the core and cladding due to thermal treatment.
(2) Average thickness per side as determined by averaging cladding thickness measurements when determined in accordance with the procedure specified in 11.2.
(3) Applicable for thicknesses of 0.500 in. and greater.

15. Retest and Rejection

15.1 If any material fails to conform to all of the applicable requirements of this specification, the inspection lot shall be rejected.

15.2 When there is evidence that a failed specimen was not representative of the inspection lot and when no other sampling plan is provided or approved by the purchaser through the contract or purchase order, at least two additional specimens shall be selected to replace each test specimen that failed. All specimens so selected for retest shall meet the requirements of the specification or the lot shall be subject to rejection.

15.3 Material in which defects are discovered subsequent to inspection may be rejected.

15.4 If material is rejected by the purchaser, the producer or supplier is responsible only for replacement of material to the purchaser. As much as possible of the rejected material shall be returned to the producer or supplier by the purchaser.

16. Identification Marking of Product

16.1 All sheet and plate shall be marked in accordance with Practice B 666.

16.2 In addition, when specified, 6061-T6 and T651 shall be marked with the lot number in at least one location on each piece.

16.3 The requirements specified in 16.1 are minimum; marking systems that involve added information, larger characters, and greater frequencies are acceptable under this specification.

17. Packaging and Package Marking

17.1 The material shall be packaged to provide adequate protection during normal handling and transportation and each package shall contain only one size, alloy, and temper of material unless otherwise agreed. The type of packaging and gross weight of containers shall, unless otherwise agreed, be at the producer's or supplier's discretion, provided that they are such as to ensure acceptance by common or other carriers for safe transportation at the lowest rate to the delivery point.

17.2 Each shipping container shall be marked with the purchase order number, material size, specification number, alloy and temper, gross and net weights, and the producer's name or trademark.

17.3 When specified in the contract or purchase order, material shall be preserved, packaged, and packed in accordance with the requirements of Practices B 660. The applicable levels shall be as specified in the contract or order. Marking for shipment of such material shall be in accordance with Fed. Std. No. 123 for civil agencies and MIL-STD-129 for military agencies.

18. Certification

18.1 The producer or supplier shall furnish to the purchaser a certificate stating that each lot has been sampled, tested, and inspected in accordance with this specification, and has met the requirements.

19. Keywords

19.1 aluminum alloy; aluminum-alloy plate; aluminum-alloy sheet

ANNEXES

(Mandatory Information)

A1. BASIS FOR INCLUSION OF PROPERTY LIMITS

A1.1 Limits are established at a level at which a statistical evaluation of the data indicates that 99% of the population obtained from all standard material meets the limit with 95% confidence. For the products described, mechanical property limits for the respective size ranges are based on the analysis of at least 100 data from standard production material with no more than ten data from a given lot. All tests are performed in accordance with the appropriate ASTM test methods. For informational purposes, refer to "Statistical Aspects of Mechanical Property Assurance" in the Related Material section of the *Annual Book of ASTM Standards*, Vol 02.02.

A2. ACCEPTANCE CRITERIA FOR INCLUSION OF NEW ALUMINUM AND ALUMINUM ALLOYS IN THIS SPECIFICATION

A2.1 Prior to acceptance for inclusion in this specification, the composition of wrought or cast aluminum or aluminum alloy shall be registered in accordance with ANSI H35.1. The Aluminum Association holds the Secretariat of ANSI H35 Committee and administers the criteria and procedures for registration.

A2.2 If it is documented that the Aluminum Association could not or would not register a given composition, an alternative procedure and the criteria for acceptance shall be as follows.

A2.2.1 The designation submitted for inclusion does not utilize the same designation system as described in ANSI H35.1. A designation not in conflict with other designation systems or a trade name is acceptable.

A2.2.2 The aluminum or aluminum alloy has been offered for sale in commercial quantities within the prior twelve months to at least three identifiable users.

A2.2.3 The complete chemical composition limits are submitted.

A2.2.4 The composition is, in the judgment of the responsible subcommittee, significantly different from that of any other aluminum or aluminum alloy already in the specification.

A2.2.5 For codification purposes, an alloying element is any element intentionally added for any purpose other than grain refinement and for which minimum and maximum limits are specified. Unalloyed aluminum contains a minimum of 99.00% aluminum.

A2.2.6 Standard limits for alloying elements and impurities are expressed to the following decimal places:

Less than 0.0001%	0.000X
0.001 to but less than 0.01%	0.00X
0.01 to but less than 0.10%	
Unalloyed aluminum made by a refining process	0.0XX
Alloys and unalloyed aluminum not made by a refining process	0.0X
0.10 through 0.55%	0.XX
(It is customary to express limits of 0.30 through 0.55% as 0.X0 or 0.X5.)	
Over 0.55%	0.X, X.X, etc.
(except that combined Si+Fe limits for 99.00%minimum aluminum must be expressed as 0.XX or 1.XX)	

A2.2.7 Standard limits for alloying elements and impurities are expressed in the following sequence: Silicon; Iron; Copper; Manganese; Magnesium; Chromium; Nickel; Zinc (Note A2.1); Titanium; Other Elements, Each; Other Elements, Total; Aluminum (Note A2.2).

NOTE A2.1 — Additional specified elements having limits are inserted in alphabetical order of their chemical symbols between zinc and titanium, or are specified in footnotes.

NOTE A2.2 — Aluminum is specified as *minimum* for unalloyed aluminum and as a *remainder* for aluminum alloys.

SPECIFICATION FOR ALUMINUM AND ALUMINUM-ALLOY DRAWN SEAMLESS TUBES

SB-210

(Identical with ASTM Specification B 210-95 for the alloys and tempers covered except for editorial differences. Testing for leaks and certification have been made mandatory.)

1. Scope

1.1 This specification covers aluminum and aluminum-alloy drawn seamless tubes in straight lengths and coils for general purpose and pressure applications in alloys (Note 2), tempers, and thicknesses shown in Table 2. Coiled tubes are generally available only as round tubes with a wall thickness not exceeding 0.083 in. and only in nonheat-treatable alloys.

1.2 Alloy and temper designations are in accordance with ANSI H35.1. The equivalent Unified Numbering System alloy designations are those of Table 1 preceded by A9, for example, A91100 for aluminum designation 1100 in accordance with Practice E 527.

NOTE 1 — See Specification SB-234 for aluminum-alloy drawn seamless tubes for condensers and heat exchangers; and Specification SB-241/SB-241M for aluminum-alloy seamless pipe and seamless extruded tube.

NOTE 2 — Throughout this specification, use of the term *alloy* in the general sense includes aluminum as well as aluminum alloy.

1.3 A complete metric companion to Specification B 210 has been developed — Specification B 210M; therefore, no metric equivalents are presented in this specification.

1.4 For acceptance criteria for inclusion of new aluminum and aluminum alloys in this specification, see Annex A2.

2. Referenced Documents

2.1 The following documents of the issue in effect on date of material purchase form a part of this specification to the extent referenced herein:

2.1.1 *ASTM Standards*

B 557 Test Methods of Tension Testing Wrought and Cast Aluminum- and Magnesium-Alloy Products

B 597 Practice for Heat Treatment of Aluminum Alloys

B 660 Practices for Packaging/Packing of Aluminum and Magnesium Products

B 666/B 666M Practice for Identification Marking of Aluminum Products

E 29 Practice for Using Significant Digits in Test Data to Determine Conformance With Specifications

E 34 Test Methods for Chemical Analysis of Aluminum and Aluminum-Base Alloys

E 55 Practice for Sampling Wrought Nonferrous Metals and Alloys for Determination of Chemical Composition

E 101 Test Method for Spectrographic Analysis of Aluminum and Aluminum Alloys by the Point-to-Plane Technique

E 215 Practice for Standardizing Equipment for Electromagnetic Examination of Seamless Aluminum-Alloy Tube

E 227 Test Method for Optical Emission Spectrometric Analysis of Aluminum and Aluminum Alloys by the Point-to-Plane Technique

E 527 Practice for Numbering Metals and Alloys (UNS)

E 607 Test Method for Optical Emission Spectrometric Analysis of Aluminum and Aluminum Alloys by the Point-to-Plane Technique, Nitrogen Atmosphere

E 716 Practices for Sampling Aluminum and Aluminum Alloys for Spectrochemical Analysis

E 1004 Test Method for Electromagnetic (Eddy-Current) Measurements of Electrical Conductivity

E 1251 Test Method for Optical Emission Spectrometric Analysis of Aluminum and Aluminum Alloys by the Argon Atmosphere, Point-to-Plane, Unipolar Self-Initiating Capacitor Discharge

2.1.2 *ANSI Standards*

H35.1 Alloy and Temper Designation Systems for Aluminum

H35.2 Dimensional Tolerances for Aluminum Mill Products

2.1.3 *Military Standard*

MIL-STD-129 Marking for Shipment and Storage

2.1.4 *Military Specification*

MIL-H-6088 Heat Treatment of Aluminum Alloys

2.1.5 *Federal Standard*

Fed. Std. No. 123 Marking for Shipment (Civil Agencies)

3. Terminology

3.1 *Definitions*

3.1.1 *tube* — a hollow wrought product that is long in relation to its cross section, which is round, a regular hexagon, a regular octagon, elliptical, or square or rectangular with sharp or rounded corners, and that has uniform wall thickness except as may be affected by corner radii

3.1.2 *drawn seamless tube* — a tube produced from hollow extrusion ingot and brought to final dimensions by drawing through a die

3.1.3 *alclad tube* — a composite tube product composed of an aluminum-alloy core having on either the inside or outside surface a metallurgically bonded aluminum or aluminum-alloy coating that is anodic to the core, thus electrolytically protecting the core against corrosion

3.1.4 *producer* — the primary manufacturer of the material

3.1.5 *supplier* — includes only the category of jobbers and distributors as distinct from producers

3.2 *Description of Term Specific to This Standard*

3.2.1 *capable of* — The term *capable of* as used in this specification means that the test need not be performed by the producer of the material. However, should subsequent testing by the purchaser establish that the material does not meet these requirements, the material shall be subject to rejection.

4. Ordering Information

4.1 Orders for material to this specification shall include the following information:

4.1.1 this specification designation (which includes the number, the year, and the revision letter, if applicable);

4.1.2 quantity in pieces or pounds;

4.1.3 alloy (Section 7);

4.1.4 temper (Section 8);

4.1.5 Cross-sectional dimensions (outside diameter and wall thickness, or inside diameter and wall thickness for round tube; for tube other than round, square, rectangular, hexagonal, or octagonal with sharp corners, a drawing is required);

4.1.6 length (straight or coiled);

4.1.7 nominal inside diameter of coils and weight or maximum outside diameter, if applicable; and

4.1.8 For alloy Alclad 3003, state clad inside or outside (16.1).

4.2 Additionally, orders for material to this specification shall include the following information when required by the purchaser:

4.2.1 whether heat treatment in accordance with Practice B 597 is required (11.2);

4.2.2 whether flattening tests are required (Section 9 and Table 3);

4.2.3 whether flare testing is required (Section 10);

4.2.4 whether inside cleanness test is required on coiled tubes (15.2) and frequency of testing required;

4.2.5 whether inspection or witness of inspection and tests by the purchaser's representative is required prior to material shipment (Section 19);

4.2.6 whether marking for identification is required (Section 22); and

4.2.7 whether Practices B 660 applies, and if so, the levels of preservation, packaging, and packing required (Section 23).

5. Materials and Manufacture

5.1 The tube shall be produced by drawing an extruded tube made from hollow extrusion ingot (cast in hollow form or pierced) and extruded by the use of the die and mandrel method.

5.2 The ends of coiled tube shall be crimped or otherwise sealed to avoid contamination during shipment.

6. Responsibility for Quality Assurance

6.1 *Responsibility for Inspection and Tests* — Unless otherwise specified in the contract or purchase order, the producer is responsible for the performance of all inspection and test requirements specified herein. The producer may use his own or any other suitable facilities for the performance of the inspection and test requirements specified herein, unless disapproved by the purchaser in the order or at the time of signing the contract. The purchaser shall have the right to perform any of the

inspections and tests set forth in this specification where such inspections are deemed necessary to ensure that material conforms to prescribed requirements.

6.2 *Lot Definition* — An inspection lot shall be defined as follows.

6.2.1 For heat-treated tempers an inspection lot shall consist of an identifiable quantity of material of the same mill form, alloy, temper, and nominal dimensions traceable to a heat-treat lot or lots, and subjected to inspection at one time.

6.2.2 For nonheat-treated tempers, an inspection lot shall consist of an identifiable quantity of material of the same mill form, alloy, temper, and nominal dimensions subjected to inspection at one time.

7. Chemical Composition

7.1 *Limits* — The tubes shall conform to the chemical composition limits prescribed in Table 1. Conformance shall be determined by the producer by analyzing samples taken at the time the ingots are poured, or samples taken from the finished or semi-finished product. If the producer has determined the chemical composition of the material during the course of manufacture, he shall not be required to sample and analyze the finished product.

NOTE 3 — It is standard practice in the United States aluminum industry to determine conformance to the chemical composition limits prior to further processing of ingots into wrought products. Due to the continuous nature of the process, it is not practical to keep a specific ingot analysis identified with a specific quantity of finished material.

7.2 *Number of Samples* — The number of samples taken for determination of chemical composition shall be as follows.

7.2.1 When samples are taken at the time the ingots are poured, at least one sample shall be taken for each group of ingots poured simultaneously from the same source of molten metal.

7.2.2 When samples are taken from the finished or semi-finished product, a sample shall be taken to represent each 4,000 lb or fraction thereof of material in the shipment, except that no more than one sample shall be required per piece.

7.3 *Methods of Sampling* — Samples for determination of chemical composition shall be taken in accordance with one of the following methods.

7.3.1 Samples for chemical analysis shall be taken from the material by drilling, sawing, milling, turning, or clipping a representative piece or pieces to obtain a prepared sample not less than 75 g. Sampling shall be in accordance with Practice E 55.

7.3.2 Sampling for spectrochemical analysis shall be in accordance with Practices E 716. Samples for other methods of analysis shall be suitable for the form of material being analyzed and the type of analytical method used.

NOTE 4 — It is difficult to obtain a reliable analysis of each of the components of clad materials using material in its finished state. A reasonably accurate determination of the core composition can be made if the cladding is substantially removed prior to analysis. The cladding composition is more difficult to determine because of the relatively thin layer and because of diffusion of core elements to the cladding. The correctness of cladding alloy used can usually be verified by a combination of metallographic examination and spectrochemical analysis of the surface at several widely separated points.

7.4 *Methods of Analysis* — The determination of chemical composition shall be made in accordance with suitable chemical (Test Methods E 34) or spectrochemical (Test Methods E 101, E 227, E 607, and E 1251) methods. Other methods may be used only when no published ASTM method is available. In case of dispute, the methods of analysis shall be agreed upon between the producer and the purchaser.

8. Tensile Properties of Material as Supplied

8.1 *Limits* — Tube shall conform to the tensile property requirements specified in Table 2.

8.2 *Number of Specimens*

8.2.1 For tubes having a nominal weight of less than 1 lb/linear ft, one tension test specimen shall be taken for each 1,000 lb or fraction thereof in a lot.

8.2.2 For tubes having a nominal weight of 1 lb or more/linear ft, one tension test specimen shall be taken for each 1,000 ft or fraction thereof in a lot.

8.2.3 If the shipment contains tubes of more than one alloy, temper, or size, only those tubes of the same alloy, temper, and size shall be grouped for the purpose of selecting tension test specimens. Other procedures for selecting samples may be employed if agreed upon by the producer and the purchaser.

8.3 *Test Specimens* — Geometry of test specimens and the location in the product from which they are taken shall be as specified in Test Methods B 557.

8.4 *Test Methods* — The tension tests shall be made in accordance with Test Methods B 557.

9. Flattening Properties

9.1 *Limits* — When specified by the purchaser at the time of placing the order, round tube in alloys and tempers

TABLE 1
CHEMICAL COMPOSITION LIMITS [NOTES (1), (2), (3)]

Alloy	Silicon	Iron	Copper	Manganese	Magnesium	Chromium	Zinc	Titanium	Other Elements [Note (4)]		Aluminum, Min.
									Each	Total [Note (5)]	
1060	0.25	0.35	0.05	0.03	0.03	...	0.05	0.03	0.03 [Note (6)]	...	99.60 min. [Note (7)]
3003	0.6	0.7	0.05–0.20	1.0–1.5	...	...	0.10	...	0.05	0.15	Remainder
Alclad 3003 [Note (8)]	...	...	...	...	...	...	...	...	...	...	...
5052	0.25	0.40	0.10	0.10	2.2–2.8	0.15–0.35	0.10	...	0.05	0.15	Remainder
5154	0.25	0.40	0.10	0.10	3.1–3.9	0.15–0.35	0.20	0.20	0.05	0.15	Remainder
6061	0.40–0.8	0.7	0.15–0.40	0.15	0.8–1.2	0.04–0.35	0.25	0.15	0.05	0.15	Remainder
6063	0.20–0.6	0.35	0.10	0.10	0.45–0.9	0.10	0.10	0.10	0.05	0.15	Remainder
7072 cladding [Note (9)]	0.7 Si + Fe		0.10	0.10	0.10	...	0.8–1.3	...	0.05	0.15	Remainder

NOTES:

(1) Limits are in weight percent maximum unless shown as a range or otherwise stated.

(2) Analysis shall regularly be made only for the elements specified in this Table. If, however, the presence of other elements is suspected or indicated in amounts greater than the specified limits, further analysis shall be made to determine that these elements are not present in excess of the specified limits.

(3) For purposes of determining conformance to these limits, an observed value or a calculated value obtained from analysis shall be rounded to the nearest unit in the last right-hand place of figures used in expressing the specified limit, in accordance with the rounding-off method of Practice E 29.

(4) Includes listed elements for which no specific limit is shown.

(5) Other elements — Total shall be the sum of unspecified metallic elements 0.010% or more, rounded to the second decimal before determining the sum.

(6) Vanadium 0.05% max.

(7) The aluminum content shall be calculated by subtracting from 100.00% the sum of all metallic elements present in amounts of 0.010% or more each, rounded to the second decimal before determining the sum.

(8) Alloy clad with Alloy 7072.

(9) Composition of cladding alloy as applied during the course of manufacture. The samples from finished tube shall not be required to conform to these limits.

TABLE 2
TENSILE PROPERTY LIMITS [NOTES (1), (2)]

Temper	Specified Wall Thickness [Note (3)], in.	Tensile Strength, ksi		Yield Strength [Note (4)] (0.2% Offset), Min., ksi	Elongation in 2 in. or 4 × Dia [Note (5)], Min., %	
		Min.	Max.		Full-Section Specimen	Cut-Out Specimen
		Aluminum 1060 [Note (6)]				
O	0.018–0.500	8.5	13.5	2.5	...	...
H14	0.018–0.500	12.0	...	10.0	...	...
H113 [Note (7)]	0.018–0.500	8.5	...	2.5	...	...
		Alloy 3003 [Note (6)]				
O	0.010–0.024	14.0	19.0	5.0	...	...
	0.025–0.049	14.0	19.0	5.0	30	20
	0.050–0.259	14.0	19.0	5.0	35	25
	0.260–0.500	14.0	19.0	5.0	...	30
H12	0.010–0.500	17.0	...	12.0	...	...
H14	0.010–0.024	20.0	...	17.0	3	...
	0.025–0.049	20.0	...	17.0	5	3
	0.050–0.259	20.0	...	17.0	8	4
	0.260–0.500	20.0	...	17.0	...	...
H18	0.010–0.024	27.0	...	24.0	2	...
	0.025–0.049	27.0	...	24.0	3	2
	0.050–0.259	27.0	...	24.0	5	3
	0.260–0.500	27.0	...	24.0	...	...
H113 [Note (7)]	0.010–0.500	14.0	...	5.0	...	...
		Alloy Alclad 3003				
O	0.010–0.024	13.0	19.0	4.5	...	...
	0.025–0.049	13.0	19.0	4.5	30	20
	0.050–0.259	13.0	19.0	4.5	35	25
	0.260–0.500	13.0	19.0	4.5	...	30
H14	0.010–0.024	19.0	...	16.0	...	...
	0.025–0.049	19.0	...	16.0	5	...
	0.050–0.259	19.0	...	16.0	8	4
	0.260–0.500	19.0	...	16.0	...	...
H18	0.010–0.500	26.0	...	23.0	...	...
H113 [Note (7)]	0.050–0.500	13.0	...	4.5	...	...
		Alloy 5052 [Note (6)]				
O [Note (6)]	0.018–0.450	25.0	35.0	10.0	...	...
H32	0.018–0.450	31.0	...	23.0	...	...
H34	0.018–0.450	34.0	...	26.0	...	...
		Alloy 5154 [Note (6)]				
O	0.010–0.450	30.0	41.0	11.0	10	10
H34	0.010–0.450	39.0	...	29.0	5	5
		Alloy 6061				
T4	0.025–0.049	30.0	...	16.0	16	14
	0.050–0.259	30.0	...	16.0	18	16
	0.260–0.500	30.0	...	16.0	20	18

TABLE 2 (CONT'D)
TENSILE PROPERTY LIMITS [NOTES (1), (2)]

Temper	Specified Wall Thickness [Note (3)], in.	Tensile Strength, ksi		Yield Strength [Note (4)] (0.2% Offset), Min., ksi	Elongation in 2 in. or 4 × Dia [Note (5)], Min., %	
		Min.	Max.		Full-Section Specimen	Cut-Out Specimen
			Alloy 6061 (Cont'd)			
T6	0.025–0.049	42.0	...	35.0	10	8
	0.050–0.259	42.0	...	35.0	12	10
	0.260–0.500	42.0	...	35.0	14	12
			Alloy 6063			
T6	0.025–0.049	33.0	...	28.0	12	8
	0.050–0.259	33.0	...	28.0	14	10
	0.260–0.500	33.0	...	28.0	16	12

NOTES:
(1) See Annex A1.
(2) To determine conformance to this specification, each value for tensile strength and for yield strength shall be rounded to the nearest 0.1 ksi and each value for elongation to the nearest 0.5%, both in accordance with the rounding-off method of Practice E 29.
(3) Coiled tube is generally available with a maximum wall thickness of 0.083 in. and only in nonheat-treatable alloys.
(4) Yield strength to be determined only on straight tube.
(5) Elongation of full-section and cut-out sheet-type specimens is measured in 2 in. of cut-out round specimens, in 4 × specimen diameter.
(6) In this alloy tube other than round is produced only in the O temper.
(7) Beginning with the 1982 issue the requirements for the H112 tempers were replaced by the H113 temper, applicable to other than round tube, which is fabricated by cold-forming annealed round tube and acquires some temper in this forming operation.

TABLE 3
MINIMUM OUTSIDE DIAMETER FLATTENING FACTOR

Alloy	Temper	Wall Thickness, in.	Min. Dia Flattening Factor, *F*
3003	O	0.025–0.500	2
	H12	0.025–0.500	3
	H14	0.025–0.500	6
5052	O	0.010–0.450	3
	H32	0.010–0.450	6
	H34	0.010–0.450	8
6061	T4	0.025–0.500	6
	T6	0.025–0.500	8

TABLE 4
MINIMUM BEND FACTOR

Alloy	Temper	Wall Thickness, in.	Min. Bend Factor, *N*
5052	O	0.010-0.249	1
	H32	0.010-0.249	4
	H34	0.010-0.249	6
6061	T4	0.025-0.500	4
	T6	0.025-0.500	6

listed in Table 3 shall be tested in full section and withstand, without cracking, the minimum outside diameter flattening factor specified in Table 3.

9.2 *Number of Specimens*

9.2.1 For tubes having a nominal weight of less than 1 lb/linear ft, one flattening test specimen shall be taken for each 1,000 lb or fraction thereof in a lot.

9.2.2 For tubes having a nominal weight of 1 lb or more/linear ft, one flattening test specimen shall be taken for each 1,000 ft or fraction thereof in a lot.

9.3 *Methods of Test* — Flattening test specimens shall be flattened sidewise under a gradually applied load so as to give a uniform radius of bend until the minimum outside diameter under load is not more than *F* times the wall thickness of the tube as specified in Table 3.

9.4 *Alternative Bend Test* — In case the tube does not flatten so as to give a uniform radius of bend, suitable jigs may be used to bring about this result, or a section of tube of not less than $\frac{1}{2}$ in. in length, with the subtended arc not greater than one half nor less than one third of the circumference of the original tube, shall be removed from the material in question and without further treatment shall be bent around a mandrel having a diameter *N* times the wall thickness of the tube as specified in Table 4. The bend shall be made with the pin placed on

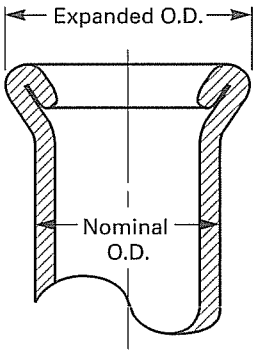

FIG. 1 DOUBLE FLARE

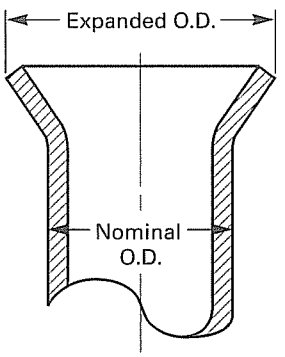

FIG. 2 SINGLE FLARE

the inside surface of the specimen, with the longitudinal axis of the pin and the specimen parallel. The bend shall be continued until the specimen encloses at least 180 deg. of the pin.

9.4.1 After the flattening test, the outer surface of the tube shall be examined visually for cracks. Any evidence of cracking shall be cause for rejection.

10. Flaring Properties

10.1 *Limits* — When specified by the purchaser at the time of placing the order, round tube in straight lengths in alloys and tempers 1100-H14, 3003-H14, 5052-O, and 6061-O with a nominal outside diameter of 0.375 in. or less, shall be capable of being double-flared to the configuration of Fig. 1, and with a nominal outside diameter over 0.375 in. shall be capable of being single-flared to the configuration of Fig. 2, without formation of cracks or other defects clearly visible to the unaided eye.

10.2 *Number of Specimens* — When flare testing is specified in the order, for tube sizes having a nominal weight of less than 1 lb/linear ft, one flaring test specimen shall be taken for each 1,000 lb or fraction thereof in the lot. For tubes having a nominal weight of 1 lb or more/linear ft, one flaring test specimen shall be taken for each 1,000 ft or fraction thereof in the lot.

TABLE 5
FLARE DIMENSIONS [NOTE (1)], in.

Nominal OD	Expanded OD, Min.	Nominal OD	Expanded OD, Min.
0.125	0.224	0.750	0.937
0.188	0.302	1.000	1.187
0.250	0.359	1.250	1.500
0.312	0.421	1.500	1.721
0.375	0.484	1.750	2.106
0.500	0.656	2.000	2.356
0.625	0.781		

NOTE:
(1) Tube with intermediate nominal diameters shall meet the same requirements as those for the next largest diameter. Tube with nominal diameters larger than 2.000 or less than 0.125 in. shall meet requirements as agreed by the purchaser and producer.

10.3 *Preparation of Specimens* — Specimens for flaring may be cut from any portion of the tube, or an entire tube may be used as a specimen. The end of the specimen to be flared shall be cut square, with the cut end smooth and free from burrs, but not rounded, except for sizes 0.375 in. and under.

10.4 *Test Methods* — The specimen shall be forced axially with steady pressure over a hardened and polished tapered steel pipe having a 74 deg. included angle, to produce a flare having the permanent expanded outside diameter specified in Table 5.

11. Heat Treatment

11.1 Unless specified in 11.2, producer or supplier heat treatment for the applicable tempers in Table 2 shall be in accordance with MIL-H-6088.

11.2 When specified, heat treatment of applicable tempers in Table 2 shall be in accordance with Practice B 597.

12. Producer's Confirmation of Heat-Treat Response

12.1 In addition to the requirements of Section 8, material in Alloys 2014, 2024, 6061, and 6063 produced in the O or F temper (within the size limits specified in Table 2) shall, after proper solution heat treatment and natural aging for not less than 4 days at room temperature, conform to the properties specified in Table 2 for T42

temper material. The heat-treated samples may be tested prior to 4 days natural aging, but if they fail to conform to the T42 temper properties, the tests may be repeated after completion of 4 days natural aging without prejudice.

12.2 *Number of Specimens* — The number of specimens from each lot of O temper material and F temper material to verify conformance with Section 12 shall be as specified in 8.2.

13. Heat Treatment and Reheat Treatment Capability

13.1 As-received material in the O or F temper and in Alloys 2014, 2024, 6061, and 6063 (within the size limitations specified in Table 2 and without the imposition of cold work) shall, after proper solution heat treatment and natural aging for not less than 4 days at room temperature, conform to the properties specified in Table 2 for T42 temper material.

13.2 As-received Alloy 7075 material in the O or F temper (within the size limitations specified in Table 2 and without the imposition of cold work) shall, after proper solution and precipitation heat treatment, conform to the properties specified in Table 2 for the T62 temper.

13.3 Material in Alloys and Tempers 2014-T4, T6; 2024-T8; and 6063-T4, T6 shall, after proper resolution heat treatment and natural aging for not less than 4 days at room temperature, conform to the properties specified in Table 2 for the T42 temper.

NOTE 5 — Beginning with the 1975 revision of B 210, 6061-T4 and T6 were deleted from this paragraph because experience has shown the reheat-treated material may develop large recrystallized grains and may fail to develop the tensile properties shown in Table 2.

13.4 Alloy 7075 material in T6 and T73 tempers shall, after proper resolution heat treatment and precipitation heat treatment, conform to the properties specified in Table 2 for the T62 temper.

13.5 Material in T4 and T42 tempers shall, after proper precipitation heat treatment, conform to the properties specified in Table 2 for the T6 and T62 tempers, respectively.

14. Test for Leaks

14.1 Tube shall be tested for leaks by one of the following methods at the option of the producer.

14.1.1 *Method 1* — Tubes 1½ in. or less in diameter shall be tested pneumatically at not less than 60 psi air pressure while immersed in water or other suitable liquid. Any evidence of leakage shall be cause for rejection.

14.1.2 *Method 2* — Tubes 1½ in. or less in diameter shall be tested pneumatically at not less than 90 psi air pressure with a gage that will indicate loss of pressure. There shall not be any loss of pressure during a test period of at least 15-s duration.

14.1.3 *Method 3* — Tubes shall be subjected to an eddy-current test in accordance with the procedures described in Practice E 215. Reference standards or secondary standards having equivalent eddy-current response shall serve to define acceptance-rejection limits. These reference standards are acceptable for testing any strain-hardened temper of the nonheat-treatable alloys and the F temper of heat-treatable alloys of Table 2 in tubes 1½ in. or less in diameter having a maximum wall thickness of 0.083 in.

14.1.3.1 For *straight lengths* of tube reference standards described in Appendixes X1 and X2 of Practice E 215 shall be used to standardize the equipment. Tubes 1½ in. or less in diameter and maximum wall thickness of 0.083 in. that produce eddy-current indications less than those from the 2A holes of the applicable reference standard or an equivalent secondary standard shall be acceptable. Any tube having a discontinuity that produces an eddy-current indication equal to or greater than those from the 2A holes of the applicable reference standard or an equivalent secondary standard shall be rejected.

14.1.3.2 For *coiled tube* secondary standards having an equivalent eddy-current response to a No. 70 (0.028 in.) and No. 60 (0.040 in.) drill holes shall be used to standardize the equipment. Tubes 3/16 to 1 in., incl, in diameter and maximum wall thickness of 0.083 in. that produce eddy-current indications less than those from the No. 60 hole of the secondary standard shall be acceptable. Any tube that produces an indication equal to or greater than those from the No. 60 hole of the secondary standard shall be rejected. Setup procedures shall include a check to ensure that tubes containing defects giving responses equal to or greater than that from a No. 60 hole are rejected at the speed of inspection. Tube in long coils may contain up to a specified number of defects per coil when agreed upon between the producer and purchaser. In cases where a specified number of defects per coil is allowed, the need for marking such defects in a coil shall be handled as agreed upon between the producer and purchaser.

15. Special Requirements for Coiled Tubes

15.1 *Expansion Test* — Coiled tube in the annealed temper only shall be capable of being expanded on a hardened ground tapered steel pin having an included

angle of 60 deg., to the following amounts, without signs of cracks, ruptures, or other defects clearly visible to the unaided eye:

Nominal Outside Diameter, in.	Expansion of Outside Diameter, %
Up through 0.750	40
0.751 and over	30

NOTE 6 — Other expansion capabilities may be required in special cases but shall be the subject of negotiation between the producer and the purchaser.

15.2 *Inside Cleanness Requirements and Test* — When specified by the purchaser at the time of placing the order, the inside of coiled tube in the annealed temper only shall be sufficiently clean so that, when a test sample of 50 ft or a minimum of 375 in.^{2} internal surface is washed with 1,1,1-trichloroethane or trichloroethylene or equivalent, the residue remaining upon evaporation of the solvent shall not exceed 0.002 g/ft^2 of interior surface.

15.2.1 To perform the test a measured quantity of the solvent shall be pulled through the tube into a flask which is, in turn, attached to an aspirator or vacuum pump. The solvent shall then be transferred to a weighed container (crucible, evaporating dish, or beaker). The solvent in the container shall be evaporated to dryness on a low-temperature hot plate or steam bath. Overheating of the container shall be avoided to prevent charring of the residue. The container shall then be dried in an oven at 100 to 110°C for 10 min., cooled in a desiccator, and weighed. A blank determination shall be run on the measured quantity of solvent, and the gain in weight for the blank shall be subtracted from the weighings of the residue sample. The corrected weight shall then be calculated in grams of residue per internal area of tube.

15.2.2 The quantity of the solvent used may vary with the size of tube being examined. A minimum quantity of 100 mL should be used for diameters up to ½ in. and should be increased proportionately for the larger sizes. The quantity of solvent used for the blank run shall be the same as that used for the actual examination of the tube sample.

15.2.3 In performing the test, care must be exercised to clean the outside surface of the end of the sample to be immersed in the solvent. The sample must be prepared in such a manner as to prevent the inclusion in the residue of aluminum chips or dust resulting from the cutting of the sample.

16. Cladding

16.1 The aluminum-alloy cladding of Alloy Alclad 3003, Alloy Alclad 3102, and Alloy Alclad 3303 tubes shall comprise either the inside surface (only) or the outside surface (only) of the tube as specified. The purchaser shall specify whether "clad inside" or "clad outside" tubes are required.

16.2 The Alloy Aclad 3003, Alloy Alclad 3102, and Alloy Alclad 3303 tubes shall be fabricated in such a manner that the cladding thickness will be approximately 10% of the specified composite wall thickness for "clad inside" and 7% for "clad outside."

16.3 When the thickness of the cladding is to be determined on finished tubes, transverse cross sections of at least three tubes from the lot shall be polished for examination with a metallurgical microscope. Using a magnification of 100×, the cladding thickness at four points, 90 deg. apart, in each sample shall be measured and the average of the twelve measurements shall be taken as the thickness. In the case of tubes having a diameter larger than can properly be mounted for polishing and examination, the portions of the cross section polished for examination may consist of an arc about ½ in. in length.

TABLE 6
INDEX TO TABLES OF PERMISSIBLE VARIATIONS OF ANSI H35.2

Table No.	Title
11.1	Diameter, Round Tube
11.2	Width and Depth, Square, Rectangular, Hexagonal, and Octagonal Tube
11.3	Diameter, Oval, Elliptical, and Streamline Tube
11.4	Corner Radii
11.5	Wall Thickness, Round and Other-Than-Round Tube
11.6	Straightness
11.7	Twist
11.8	Length
11.9	Flatness, (Flat Surfaces) Other-Than-Round Tube
11.10	Squareness of Cut Ends
11.11	Angularity
11.12	Surface Roughness
11.13	Dents

17. Dimensional Tolerances

17.1 Variations from the specified or nominal dimensions shall not exceed the permissible variations prescribed in tables of ANSI H35.2 in accordance with Table 6.

17.2 *Sampling for Inspection* — Examination for dimensions shall be made to ensure conformance to the tolerances specified.

18. General Quality

18.1 Unless otherwise specified, the material shall be supplied in the mill finish and shall be uniform as defined by the requirements of this specification and shall be commercially sound. Any requirement not so covered is subject to negotiation between producer and purchaser.

18.2 Each tube shall be examined to determine conformance to this specification with respect to general quality and identification marking. On approval of the purchaser, however, the producer may use a system of statistical quality control for such examinations.

19. Source Inspection

19.1 If the purchaser desires that his representative inspect or witness the inspection and testing of the material prior to shipment, such agreement shall be made by the purchaser and the producer as part of the purchase contract.

19.2 When such inspection or witness of inspection and testing is agreed upon, the producer or supplier shall afford the purchaser's representative all reasonable facilities to satisfy him that the material meets the requirements of this specification. Inspection and tests shall be conducted so there is no unnecessary interference with the producer's operations.

20. Retest and Rejection

20.1 If any material fails to conform to all the applicable requirements of this specification, it shall be cause for rejection of the inspection lot.

20.2 When there is evidence that a failed specimen was not representative of the inspection lot and when no other sampling plan is provided or approved by the purchaser through the contract or purchase order, at least two additional specimens shall be selected to replace each test specimen that failed. All specimens so selected for retest shall meet the requirements of the specification or the lot shall be subject to rejection.

20.3 Material in which defects are discovered subsequent to inspection may be rejected.

20.4 If material is rejected by the purchaser, the producer or supplier is responsible only for replacement of the material to the purchaser. As much as possible of the rejected material shall be returned to the producer or supplier.

21. Certification

21.1 The producer or supplier shall furnish to the purchaser a certificate stating that the material has been sampled, tested, and inspected in accordance with this specification, and has met the requirements.

22. Identification Marking of Product

22.1 When specified in the contract or purchase order, all tubes in straight lengths shall be marked in accordance with Practice B 666/B 666M and the marking legend shall include the word "seamless."

22.2 Alloys in the 2000 and 7000 series furnished in the T6 and T73 tempers shall also be marked with the lot number in at least one location on each piece.

22.3 The foregoing requirements are minimum; marking systems that involve added information, larger characters, and greater frequencies are acceptable under this specification.

23. Packaging and Package Marking

23.1 The material shall be packaged to provide adequate protection during normal handling and transportation and each package shall contain only one size, alloy, and temper of material unless otherwise agreed. The type of packing and gross weight of containers shall, unless otherwise agreed upon, be at the producer's or supplier's discretion, provided that they are such as to ensure acceptance by common or other carriers for safe transportation at the lowest rate to the delivery point.

23.2 Each shipping container shall be marked with the purchase order number, material size, specification number, alloy and temper, gross and net weights, and the producer's name or trademark.

23.3 When specified in the contract or purchase order, material shall be preserved, packaged, and packed in accordance with the requirements of Practices B 660. The applicable levels shall be as specified in the contract or order. Marking for shipment of such material shall be in accordance with Fed. Std. No. 123 for civil agencies and MIL-STD-129 for military agencies.

24. Keywords

24.1 aluminum alloy; aluminum-alloy drawn seamless tubes

ANNEXES

(Mandatory Information)

A1. BASIS FOR INCLUSION OF PROPERTY LIMITS

A1.1 Limits are established at a level at which a statistical evaluation of the data indicates that 99% of the population obtained from all standard material meets the limit with 95% confidence. For the products described, mechanical property limits for the respective size ranges are based on the analysis of at least 100 data from standard production material with no more than ten data from a given lot. All tests are performed in accordance with the appropriate ASTM test methods. For informational purposes, refer to "Statistical Aspects of Mechanical Property Assurance" in the Related Material section of the *Annual Book of ASTM Standards,* Vol 02.02.

A2. ACCEPTANCE CRITERIA FOR INCLUSION OF NEW ALUMINUM AND ALUMINUM ALLOYS IN THIS SPECIFICATION

A2.1 Prior to acceptance for inclusion in this specification, the composition of wrought or cast aluminum or aluminum alloy shall be registered in accordance with ANSI H35.1. The Aluminum Association holds the Secretariat of ANSI H35 Committee and administers the criteria and procedures for registration.

A2.2 If it is documented that the Aluminum Association could not or would not register a given composition, an alternative procedure and the criteria for acceptance shall be as follows.

A2.2.1 The designation submitted for inclusion does not utilize the same designation system as described in ANSI H35.1. A designation not in conflict with other designation system or a trade name is acceptable.

A2.2.2 The aluminum or aluminum alloy has been offered for sale in commercial quantities within the prior twelve months to at least three identifiable users.

A2.2.3 The complete chemical composition limits are submitted.

A2.2.4 The composition is, in the judgment of the responsible subcommittee, significantly different from that of any other aluminum or aluminum alloy already in the specification.

A2.2.5 For codification purposes, an alloying element is any element intentionally added for any purpose other than grain refinement and for which minimum and maximum limits are specified. Unalloyed aluminum contains a minimum of 99.00% aluminum.

A2.2.6 Standard limits for alloying elements and impurities are expressed to the following decimal places:

Less than 0.001%	0.000X
0.001 to but less than 0.01%	0.00X
0.01 to but less than 0.10%	
Unalloyed aluminum made by a refining process	0.0XX
Alloys and unalloyed aluminum not made by a refining process	0.0X
0.10 through 0.55%	0.XX
(It is customary to express limits of 0.30 through 0.55% as 0.X0 or 0.X5.)	
Over 0.55%	0.X, X.X, etc.
(except that combined Si+Fe limits for 99.00% minimum aluminum must be expressed as 0.XX or 1.XX)	

A2.2.7 Standard limits for alloying elements and impurities are expressed in the following sequence: Silicon; Iron; Copper; Manganese; Magnesium; Chromium; Nickel; Zinc (Note A2.1); Titanium; Other Elements, Each; Other Elements, Total; Aluminum (Note A2.2).

NOTE A2.1 — Additional specified elements having limits are inserted in alphabetical order of their chemical symbols between zinc and titanium, or are specified in footnotes.

NOTE A2.2 — Aluminum is specified as *minimum* for unalloyed aluminum and as a *remainder* for aluminum alloys.

SPECIFICATION FOR ALUMINUM AND ALUMINUM-ALLOY BAR, ROD, AND WIRE

SB-211

(Identical with ASTM Specification B 211-99 except that certification has been made mandatory.)

1. Scope

1.1 This specification covers rolled or cold-finished bar, rod, and wire in alloys (Note 1) and tempers as shown in Table 1.

NOTE 1 — Throughout this specification use of the term *alloy* in the general sense includes aluminum as well as aluminum alloy.

NOTE 2 — The term *cold finished* is used to indicate the type of surface finish, sharpness of angles, and dimensional tolerances produced by drawing through a die.

NOTE 3 — See Specification B 221 for aluminum and aluminum-alloy extruded bars, rods, wire, shapes, and tubes; and Specification B 316 for aluminum and aluminum-alloy rivet and cold-heading wire and rods.

1.2 Alloy and temper designations are in accordance with ANSI H35.1. The equivalent UNS alloy designations are those of Table 2 preceded by A9, for example, A91100 for aluminum 1100 in accordance with Practice E 527.

1.3 A complete metric companion to Specification B 211 has been developed—B 211M; therefore, no metric equivalents are presented in this specification.

1.4 For acceptance criteria for inclusion of new aluminum and aluminum alloys in this specification, see Annex A2.

2. Referenced Documents

2.1 The following documents of the issue in effect on date of material purchase form a part of this specification to the extent referenced herein:

2.2 *ASTM Standards:*

B 557 Test Methods of Tension Testing Wrought and Cast Aluminum- and Magnesium-Alloy Products

B 594 Practice for Ultrasonic Inspection of Aluminum-Alloy Wrought Products for Aerospace Applications

B 597 Practice for Heat Treatment of Aluminum Alloys

B 660 Practices for Packaging/Packing of Aluminum and Magnesium Products

B 666/B 666M Practice for Identification Marking of Aluminum Products

E 29 Practice for Using Significant Digits in Test Data to Determine Conformance With Specifications

E 34 Test Methods for Chemical Analysis of Aluminum and Aluminum-Base Alloys

E 55 Practice for Sampling Wrought Nonferrous Metals and Alloys for Determination of Chemical Composition

E 227 Test Method for Optical Emission Spectrometric Analysis of Aluminum and Aluminum Alloys by the Point-to-Plane Technique

E 290 Test Methods for Bend Testing of Material for Ductility

E 527 Practice for Numbering Metals and Alloys (UNS)

E 607 Test Method for Optical Emission Spectrometric Analysis of Aluminum and Aluminum Alloys by the Point-to-Plane Technique, Nitrogen Atmosphere

E 716 Practices for Sampling Aluminum and Aluminum Alloys for Spectrochemical Analysis

E 1004 Test Method for Electromagnetic (Eddy-Current) Measurements of Electrical Conductivity

E 1251 Test Method for Optical Emission Spectrometric Analysis of Aluminum and Aluminum Alloys by the Argon Atmosphere, Point-to-Plane, Unipolar Self Initiating Capacitor Discharge

G 47 Test Method for Determining Susceptibility to Stress-Corrosion Cracking of 2XXX and 7XXX Aluminum-Alloy Products

2.3 *ANSI Standards:*

H35.1 Alloy and Temper Designation Systems for Aluminum

H35.2 Dimensional Tolerances for Aluminum Mill Products

2.4 *Federal Standard:*
Fed. Std. No. 123 Marking for Shipment (Civil Agencies)

2.5 *Military Standard:*
MIL-STD-129 Marking for Shipment and Storage

2.6 *Aerospace Material Specification:*
AMS-H-6088 Heat Treatment of Aluminum Alloys

3. Terminology

3.1 *Definitions:*

3.1.1 *alclad wire* — wire having on its surface a metallurgically bonded aluminum or aluminum-alloy coating that is anodic to the core alloy to which it is bonded, thus electrolytically protecting the core alloy against corrosion.

3.1.2 *bar* — a solid product that is long in relation to cross section which is square or rectangular (excluding plate and flattened wire) with sharp or rounded corners or edges, or is a regular hexagon or octagon, and in which at least one perpendicular distance between parallel faces is 0.375 in. or greater.

3.1.3 *cold-finished bar* — bar brought to final dimensions by cold working to obtain improved surface finish and dimensional tolerances.

3.1.4 *cold-finished rod* — rod brought to final dimensions by cold working to obtain improved surface finish and dimensional tolerances.

3.1.5 *drawn wire* — wire brought to final dimensions by drawing through a die.

3.1.6 *flattened and slit wire* — flattened wire which has been slit to obtain square edges.

3.1.7 *flattened wire* — a solid section having two parallel flat surfaces and rounded edges produced by roll-flattening round wire.

3.1.8 *producer* — the primary manufacturer of the material.

3.1.9 *rod* — a solid product 0.375 in. or greater in diameter that is long in relation to cross section.

3.1.10 *supplier* — includes only the category of jobbers and distributors as distinct from producers.

3.1.11 *wire* — a solid section long in relation to its cross-sectional dimensions, having a cross section that is round, hexagonal, or octagonal and whose diameter, width, or greatest distance between parallel faces is less than 0.375 in., or having a symmetrical cross section that is square or rectangular (excluding flattened wire) with sharp or rounded corners or edges.

3.2 *Description of Term Specific to This Standard:*

3.2.1 *capable of* — The term *capable of* as used in this specification means that the test need not be performed by the producer of the material. However, should subsequent testing by the purchaser establish that the material does not meet these requirements, the material shall be subject to rejection.

4. Ordering Information

4.1 Orders for material to this specification shall include the following information:

4.1.1 This specification designation (which includes the number, the year, and the revision letter, if applicable),

4.1.2 Quantity in pieces or pounds,

4.1.3 Alloy (Section 7),

4.1.4 Temper (Section 9),

4.1.5 *Product Form* — Rolled or cold-finished bar, rolled or cold finished rod, or wire,

4.1.6 *Geometry and Dimensions* — Diameter for rounds; distance across flats for square-cornered squares, hexagons, or octagons; width and depth for square-cornered rectangles (orders for squares, hexagons, octagons, or rectangles with rounded corners usually require a drawing),

4.1.7 Length,

4.1.8 Tensile property limits and dimensional tolerances for sizes not covered in Table 1 and in ANSI H35.2, respectively.

4.2 Additionally, orders for material to this specification shall include the following information when required by the purchaser:

4.2.1 Whether heat treatment in accordance with Practice B 597 is required (8.2),

4.2.2 Whether 7075-O material is required to develop requirements for T73 temper (see 10.1.2),

4.2.3 Whether bend testing is required for 2017, 2024, or 3003 (Section 12),

4.2.4 When specified finish of bar and rod is not required (Section 16),

4.2.5 Whether marking for identification is required (Section 17),

4.2.6 Whether ultrasonic inspection is required (Section 18, Table 3),

4.2.7 Whether inspection or witness of inspection and tests by the purchaser's representative is required prior to material shipment (Section 20),

4.2.8 Certification is required (Section 22), and

4.2.9 Whether Practices B 660 apply, and if so, the levels of preservation, packaging, and packing required (Section 23).

5. Manufacture

5.1 The products covered by this specification shall be produced either by hot extruding and cold finishing or by hot rolling with or without cold finishing, at the option of the producer.

6. Quality Assurance

6.1 *Responsibility for Inspection and Tests* — Unless otherwise specified in the contract or purchase order, the producer is responsible for the performance of all inspection and test requirements specified herein. The producer may use his own or any other suitable facilities for the performance of the inspection and test requirements specified herein, unless disapproved by the purchaser in the order or at the time of contract signing. The purchaser shall have the right to perform any of the inspections and tests set forth in this specification where such inspections are deemed necessary to ensure that material conforms to prescribed requirements.

6.2 *Lot Definition* — An inspection lot shall be defined as follows.

6.2.1 For heat-treated tempers, an inspection lot shall consist of an identifiable quantity of material of the same mill form, alloy, temper, and nominal dimensions traceable to a heat-treat lot or lots, and subjected to inspection at one time.

6.2.2 For nonheat-treated tempers, an inspection lot shall consist of an identifiable quantity of material of the same mill form, alloy, temper, and nominal dimensions subjected to inspection at one time.

7. Chemical Composition

7.1 *Limits* — The bars, rods, and wire shall conform to the chemical composition limits specified in Table 2. Conformance shall be determined by the producer by analyzing samples taken at the time the ingots are poured, or samples taken from the finished or semifinished product. If the producer has determined the chemical composition of the material during the course of manufacture, sampling and analysis of the finished product shall not be required.

NOTE 4 — It is standard practice in the United States aluminum industry to determine conformance to the chemical composition limits prior to further processing of ingots into wrought products. Due to the continuous nature of the process, it is not practical to keep a specific ingot analysis identified with a specific quantity of finished material.

7.2 *Number of Samples* — The number of samples taken for determination of chemical composition shall be as follows:

7.2.1 When samples are taken at the time the ingots are cast, at least one sample shall be taken for each group of ingots poured simultaneously from the same source of molten metal.

7.2.2 When samples are taken from the finished or semifinished product, a sample shall be taken to represent each 4000 lb, or fraction thereof, in the lot, except that no more than one sample shall be required per piece.

7.3 *Methods of Sampling* — Samples for determination of chemical composition shall be taken in accordance with one of the following methods:

7.3.1 Samples for chemical analysis shall be taken from the material by drilling, sawing, milling, turning, clipping, etc., a representative piece or pieces to obtain a weight of prepared sample not less than 75 g. Sampling shall be in accordance with Practice E 55.

7.3.2 Sampling for spectrochemical analysis shall be in accordance with Practices E 716. Samples for other methods of analysis shall be suitable for the form of material being analyzed and the type of analytical method used.

NOTE 5 — It is difficult to obtain a reliable analysis of each of the components of clad materials using material in its finished state. A reasonably accurate determination of the core composition can be made if the cladding is substantially removed prior to analysis. The cladding composition is more difficult to determine because of the relatively thin layer and because of diffusion of core elements to the cladding. The correctness of cladding alloy used can usually be verified by a combination of metallographic examination and spectrochemical analysis of the surface at several widely separated points.

7.4 *Method of Analysis* — The determination of chemical composition shall be made in accordance with suitable chemical (Test Methods E 34) or spectrochemical (Test Methods E 227, E 607, and E 1251) methods. Other methods may be used only when no published ASTM method is available. In case of dispute, the methods of analysis shall be agreed upon between the purchaser and the producer.

8. Heat Treatment

8.1 Unless otherwise specified in 8.2, producer or supplier heat treatment for the applicable tempers in Table 1 shall be in accordance with AMS-H-6088.

8.2 When specified, heat treatment of applicable tempers in Table 1 shall be in accordance with Practice B 597.

TABLE 1
MECHANICAL PROPERTY LIMITS[A]

Temper	Specified Diameter or Thickness, in.	Tensile Strength, ksi min	Tensile Strength, ksi max	Yield Strength[B] (0.2% offset), min, ksi	Elongation[B] in 2 in. or 4 × Diameter, min, %
		Aluminum 1060			
O	0.124 and under	8.0	...	...	...
	0.125 and over	8.0	...	2.5	25
H14	0.374 and under	12.0	...	10.0	...
H18	0.374 and under	16.0	...	13.0	...
		Aluminum 1100			
O	0.124 and under	11.0	15.5	...	...
	0.125 and over	11.0	15.5	3.0	25
H12	0.374 and under	14.0	...	...	...
H14	0.374 and under	16.0	...	...	...
H16	0.374 and under	19.0	...	...	...
H18	0.374 and under	22.0	...	...	...
H112	all	11.0	...	3.0	...
F	all	[C]	...	[C]	...
		Alloy 2011			
T3	0.125–1.500	45.0	...	38.0	10
	1.501–2.000	43.0	...	34.0	12
	2.001–3.500	42.0	...	30.0	12
T4 and T451[D]	0.125–8.000	40.0	...	18.0	16
T8	0.125–3.250	54.0	...	40.0	10
		Alloy 2014[E]			
O	0.124 and under	...	35.0	...	...
	0.125–8.000	...	35.0	...	12
T4, T42[F], and T451[D]	0.124 and under	55.0	...	...	...
	0.125–8.000[G]	55.0	...	32.0	16
T6, T62[F], and T651[D]	0.124 and under	65.0	...	...	...
	0.125–8.000[G]	65.0	...	55.0	8
		Alloy 2017[E]			
O	0.124 and under	...	35.0	...	...
	0.125–8.000	...	35.0	...	16
T4, T42[F], and T451[D]	0.124 and under	55.0	...	...	...
	0.125–8.000[H]	55.0	...	32.0	12
		Alloy 2024[E]			
O	0.124 and under	...	35.0	...	...
	0.125–8.000	...	35.0	...	16
T36	0.124 and under	69.0	...	...	...
	0.125–0.375	69.0	...	52.0	10
T4[I]	0.124 and under	62.0	...	...	...
	0.125–0.499	62.0	...	45.0[I]	10
	0.500–4.500[G]	62.0	...	42.0[I]	10
	4.501–6.500[I]	62.0	...	40.0	10
	6.501–8.000[J]	58.0	...	38.0	10
T42[F]	0.124 and under	62.0	...	...	...
	0.125–1.000	62.0	...	37.0	10
	1.001–6.500[G]	62.0	...	40.0	10

(continued)

TABLE 1
MECHANICAL PROPERTY LIMITS[A] (CONT'D)

Temper	Specified Diameter or Thickness, in.	Tensile Strength, ksi min	Tensile Strength, ksi max	Yield Strength[B] (0.2% offset), min, ksi	Elongation[B] in 2 in. or 4 × Diameter, min, %
		Aluminum 2024[E] (cont'd)			
T351[D]	0.500–6.500[G]	62.0	...	45.0	10
T6	0.124 and under	62.0	...	...	...
	0.125–6.500[G]	62.0	...	50.0	5
T62[F]	0.124 and under	60.0	...	...	...
	0.125–6.500[G]	60.0	...	46.0	5
T851[D]	0.500–6.500[G]	66.0	...	58.0	5
		Alloy 2219			
T851[D]	0.500–2.000	58.0	...	40.0	4
	2.001–4.000	57.0	...	39.0	4
		Alloy 3003			
O	all	14.0	19.0	5.0	25
H12	0.374 and under	17.0	...	...	...
H14	0.374 and under	20.0	...	...	...
H16	0.374 and under	24.0	...	...	...
H18	0.374 and under	27.0	...	...	...
H112	all	14.0	...	5.0	...
F	all	[C]	...	[C]	...
		Alloy 5052			
O	0.124 and under	...	32.0	...	...
	0.125 and over	25.0	32.0	9.5	25
H32	0.124 and under	31.0	...	...	...
	0.125–0.374	31.0	...	23.0	...
H34	0.374 and under	34.0	...	26.0	...
H36	0.124 and under	37.0	...	...	...
	0.125–0.374	37.0	...	29.0	...
H38	0.374 and under	39.0	...	...	...
F	all	[C]	...	[C]	...
		Alloy 5056			
O	0.124 and under	...	46.0	...	...
	0.125 and over	...	46.0	...	20
H111	0.374 and under	44.0	...	...	...
H12	0.374 and under	46.0	...	...	...
H32	0.374 and under	44.0	...	...	...
H14	0.374 and under	52.0	...	...	...
H34	0.374 and under	50.0	...	...	...
H18	0.374 and under	58.0	...	...	...
H38	0.374 and under	55.0	...	...	...
H192	0.374 and under	60.0	...	...	...
H392	0.374 and under	58.0	...	...	...
		Alclad Alloy 5056			
H192	0.374 and under	52.0	...	...	...
H392	0.374 and under	50.0	...	...	...
H393	0.120–0.192	54.0	...	47.0	...

(continued)

TABLE 1
MECHANICAL PROPERTY LIMITS[A] (CONT'D)

Temper	Specified Diameter or Thickness, in.	Tensile Strength, ksi min	Tensile Strength, ksi max	Yield Strength[B] (0.2% offset), min, ksi	Elongation[B] in 2 in. or 4 × Diameter, min, %
		Alloy 5154			
O	all	30.0	41.0	11.0	25
H32	0.374 and under	36.0	...	...	...
H34	0.374 and under	39.0	...	...	...
H36	0.374 and under	42.0	...	...	...
H38	0.374 and under	45.0	...	...	...
H112	all	30.0	...	11.0	...
		Alloy 6061[E]			
O	0.124 and under	...	22.0	...	...
	0.125–8.000	...	22.0	...	18
T4 and T451[D]	0.124 and under	30.0	...	...	...
	0.125–8.000[H]	30.0	...	16.0	18
T42[F]	0.125–8.000[H]	30.0	...	14.0	18
T6, T62[F], and T651[D]	0.124 and under	42.0	...	...	...
	0.125–8.000[H]	42.0	...	35.0	10
T89 and T94	0.374 and under	54.0	...	47.0	...
		Alloy 6110			
T9	0.374 and under	65.0	...	63.0	2
		Alloy 6262			
T6 and T651[D]	0.125–8.000[G]	42.0	...	35.0	10
T9	0.125–2.000	52.0	...	48.0	5
	2.001–3.000	50.0	...	46.0	5
		Alloy 7075[E]			
O	0.124 and under	...	40.0	...	...
	0.125–8.000	...	40.0	...	10
T6, T62	0.124 and under	77.0	...	66.0	...
	0.125–4.000[K]	77.0	...	66.0	7
T651	0.124 and under	77.0	...	66.0	...
	0.125–4.000[K]	77.0	...	66.0	7
	4.001–6.000	75.0	...	64.0	7
	6.001–7.000	73.0	...	62.0	7
T73 and T7351[D]	0.124 and under	68.0	...	...	...
	0.125–4.000	68.0	...	56.0	10
	4.001–5.000	66.0	...	55.0	8

Temper	Specified Diameter or Thickness, in.	Bend Diameter Factor, N
	Alloy 2017	
T4, T42, and T451	0.124 and under	3[L]
	0.125–8.000[H]	6[L]
	Alloy 2024	
O	0.124 and under	1
T351, T4, T42	0.124 and under	3
	0.125–6.500	6

(continued)

TABLE 1
MECHANICAL PROPERTY LIMITS[A] (CONT'D)

Temper	Specified Diameter or Thickness, in.	Bend Diameter Factor, *N*
	Alloy 3003	
O	all	0
H12	0.374 and under	2
H14	0.374 and under	2
H16	0.374 and under	8

[A] To determine conformance to this specification, each value for tensile strength and for yield strength shall be rounded to the nearest 0.1 ksi and each value for elongation to the nearest 0.5%, both in accordance with the rounding-off method of Practice E 29. The basis for establishment of tensile property limits is shown in Annex A1.

[B] The measurement of yield strength and elongation is not required for wire less than 0.125 in. in thickness or diameter.

[C] There are no tensile requirements for material in the F temper but it usually can be expected that material 1½ in. or less in thickness or diameter (except sections over 4 in. in width) will have a strength about equivalent to the H14 or H34 temper. As size increases the strength decreases to nearly that of the O temper.

[D] For stress-relieved tempers, characteristics and properties other than those specified may differ somewhat from the corresponding characteristics and properties of material in the basic tempers.

[E] Also available in the F temper for which no properties are specified and no tension tests are performed but for which tests are performed for confirmation of heat-treat response as required by Section 10.

[F] Material in the T42 or T62 tempers is not available from the materials producers. These properties can usually be obtained by the user when material is properly solution heat treated or solution and precipitation heat treated from the O or F temper. These properties also apply to samples of material in the O or F temper that are solution heat treated or solution and precipitation heat treated by the producer to determine that the material will respond to proper heat treatment. Properties attained by the user, however, may be lower than those listed if the material has been formed or otherwise cold or hot worked, particularly in the O temper, prior to solution heat treatment.

[G] Properties listed for this full size increment are applicable to rod. Properties listed are also applicable to square, rectangular, hexagonal, or octagonal bar having a maximum thickness of 4 in. and a maximum cross-sectional area of 36 in.^{2}

[H] For bar, maximum cross-sectional area is 50 in.^{2}

[I] Minimum yield strength of coiled 2024-T4 wire and rod 0.125 in. and larger in thickness or diameter is 40.0 ksi.

[J] Properties listed for this size increment are applicable to rod only.

[K] For rounds, maximum diameter is 4 in.; for square, hexagonal, or octagonal bar, maximum thickness is 3½ in.; for rectangular bar, maximum thickness is 3 in. with corresponding maximum width of 6 in.; for rectangular bar less than 3 in. in thickness, maximum width is 10 in.

[L] Bend diameter factor values stated for this full size increment apply to T4 product only. Values listed also apply to T451 product in the 0.500–8.000 in. size range.

9. Tensile Properties of Material As Supplied

9.1 *Limits* — The bars, rods, and wire shall conform to the tensile requirements specified in Table 1.

9.2 *Number of Specimens:*

9.2.1 For material having a nominal weight of less than 1 lb/linear ft, one tension test specimen shall be taken for each 1000 lb or fraction thereof in the lot. Only one specimen shall be taken from any one piece when more than one piece is available.

9.2.2 For material having a nominal weight of 1 lb or more/linear ft, one tension test specimen shall be taken for each 1000 ft or fraction thereof in the lot. Only one specimen shall be taken from any one piece when more than one piece is available.

9.3 *Test Specimens* — Geometry of test specimens and the location in the product from which they are taken shall be as specified in Test Methods B 557.

9.4 *Test Methods* — The tension tests shall be made in accordance with Test Methods B 557.

10. Producer Confirmation of Heat-Treat Response

10.1 In addition to the requirements of 9.1, material in Alloys 2014, 2017, 2024, and 6061 produced in the O or F temper (within the size limits specified in Table 1) shall, after proper solution heat treatment and natural aging for not less than 4 days at room temperature, conform to the properties specified in Table 1 for T42 temper material. The heat-treated samples may be tested prior to four days natural aging, but if they fail to conform to the T42 temper properties, the tests may be repeated after completion of four days natural aging without prejudice.

10.1.1 Alloy 7075 material produced in the O or F temper (within the size limits specified in Table 1) shall, after proper solution heat treatment and precipitation heat treatment, conform to the properties specified in Table 1 for T62 temper material.

10.1.2 When specified, 7075-O material (within the size limits specified in Table 1) shall, after proper solution and precipitation heat treatment, conform to the properties

TABLE 2
CHEMICAL COMPOSITION LIMITS[A,B,C]

Alloy	Silicon	Iron	Copper	Manganese	Magnesium	Chromium	Zinc	Bismuth	Lead	Titanium	Other Elements[D] Each	Other Elements[D] Total[E]	Aluminum
1060	0.25	0.35	0.05	0.03	0.03	...	0.05	...	...	0.03	0.03[F]	...	99.60 min[G]
1100	0.95 Si + Fe		0.05–0.20	0.05	...	...	0.10	...	...	...	0.05	0.15	99.00 min[G]
2011	0.40	0.7	5.0–6.0	...	...	...	0.30	0.20–0.6	0.20–0.6	...	0.05	0.15	remainder
2014	0.50–1.2	0.7	3.9–5.0	0.40–1.2	0.20–0.8	0.10	0.25	...	...	0.15	0.05	0.15	remainder
2017	0.20–0.8	0.7	3.5–4.5	0.40–1.0	0.40–0.8	0.10	0.25	...	...	0.15	0.05	0.15	remainder
2024	0.50	0.50	3.8–4.9	0.30–0.9	1.2–1.8	0.10	0.25	...	...	0.15	0.05	0.15	remainder
2219	0.20	0.30	5.8–6.8	0.20–0.40	0.02	...	0.10	...	...	0.02–0.10	0.05[H]	0.15[H]	remainder
3003	0.6	0.7	0.05–0.20	1.0–1.5	...	...	0.10	...	...	...	0.05	0.15	remainder
5052	0.25	0.40	0.10	0.10	2.2–2.8	0.15–0.35	0.10	...	...	...	0.05	0.15	remainder
5056	0.30	0.40	0.10	0.05–0.20	4.5–5.6	0.05–0.20	0.10	...	...	...	0.05	0.15	remainder
Alclad 5056	5056 alloy clad with 6253 alloy				...	...	...	...	...	...	...	...	...
5154	0.25	0.40	0.10	0.10	3.1–3.9	0.15–0.35	0.20	...	...	0.20	0.05	0.15	remainder
6061	0.40–0.8	0.7	0.15–0.40	0.15	0.8–1.2	0.04–0.35	0.25	...	...	0.15	0.05	0.15	remainder
6110	0.7–1.5	0.8	0.20–0.7	0.20–0.7	0.50–1.1	0.04–0.25	0.30	...	...	0.15	0.05	0.15	remainder
6253[I]	[J]	0.50	0.10	...	1.0–1.5	0.04–0.35	1.6–2.4	...	...	...	0.05	0.15	remainder
6262	0.40–0.8	0.7	0.15–0.40	0.15	0.8–1.2	0.04–0.14	0.25	0.40–0.7	0.40–0.7	0.15	0.05	0.15	remainder
7075	0.40	0.50	1.2–2.0	0.30	2.1–2.9	0.18–0.28	5.1–6.1	...	...	0.20	0.05	0.15	remainder

[A] Limits are in mass percent maximum unless otherwise shown.

[B] Analysis shall be made for the elements for which limits are shown in this table.

[C] For purpose of determining conformance to these limits, an observed value or a calculated value obtained from analysis shall be rounded to the nearest unit in the last right-hand place of figures used in expressing the specified limit, in accordance with the rounding-off method of Practice E 29.

[D] *Others* includes listed elements for which no specific limit is shown as well as unlisted metallic elements. The producer may analyze samples for trace elements not specified in the specification. However, such analysis is not required and may not cover all metallic *Others* elements. Should any analysis by the producer or the purchaser establish that an *Others* element exceeds the limit of *Each* or that the aggregate of several *Others* elements exceeds the limit of *Total,* the material shall be considered non-conforming.

[E] *Other elements*—Total shall be the sum of unspecified metallic elements 0.010% or more each, rounded to the second decimal before determining the sum.

[F] Vanadium 0.05% max.

[G] The aluminum content is the difference between 100.00% and the sum of all other metallic elements and silicon present in amounts of 0.010% or more each, rounded to the second decimal before determining the sum.

[H] Vanadium 0.05–0.15% zirconium 0.10–0.25%. The total for other elements does not include vanadium and zirconium.

[I] Composition of cladding alloy as applied during the course of manufacture. Samples from finished wire shall not be required to conform to these limits.

[J] 45 to 65% of actual magnesium content.

specified to T73 temper in Table 1 and Section 13.

10.2 *Number of Specimens*— The number of specimens from each lot of O temper material and F temper material to verify conformance with 10.1 shall be as specified in 9.2.

11. Heat Treatment and Reheat Treatment Capability

11.1 As-received material in the O or F temper and in Alloys 2014, 2017, 2024, and 6061 (within the size limitation specified in Table 1 and without the imposition of cold work) shall, after proper solution heat treatment and natural aging for not less than 4 days at room temperature, conform to the properties specified in Table 1 for T42 material.

11.2 As-received Alloy 7075 material in the O or F temper (within the size limitation specified in Table 1 and without the imposition of cold work) shall, after proper solution and precipitation heat treatment, conform to the properties specified in Table 1 for T6 and T62 tempers.

11.3 Material in Alloys and Tempers 2014-T4, T451, T6, T651; 2017-T4, T451; 2024-T4, T6, T351, and T851 shall, after proper resolution heat treatment and natural aging for not less than 4 days at room temperature, conform to the properties specified in Table 1 for the T42 temper.

NOTE 6 — Beginning with the 1975 revision 6061-T4, T6, T451, and T651 were deleted from this paragraph because experience has shown the reheat-treated material tends to develop large recrystallized grains and may fail to develop the expected level of properties.

11.4 Alloy 7075 material in T6, T651, T73, and T7351 tempers shall, after proper resolution heat treatment and precipitation heat treatment, conform to the properties specified in Table 1 for T6 and T62 tempers.

11.5 Material in T3, T4, T42, T351, and T451 tempers shall, after proper precipitation heat treatment, conform to the properties specified in Table 1 for the T8, T6, T62, T851, and T651 tempers, respectively.

12. Bend Properties

12.1 When bend testing is specified for the alloys, tempers, and dimensions as listed with Bend Diameter Factor, N, values in Table 1; bend test specimens shall be prepared and tests shall be made in accordance with the applicable requirements of Test Method E 290. Bend test samples shall be bend cold without cracking through an angle of 180° around a pin having a diameter equal to N times the product diameter or least thickness of the specimen.

TABLE 3
ULTRASONIC DISCONTINUITY LIMITS FOR ROLLED OR COLD-FINISHED BAR[A]

	Size			
Alloys	Thickness, in.	Maximum Weight per Piece, lb	Maximum Width to Thickness Ratio	Discontinuity Class[B]
2014, 2219 2024, 7075	0.500–1.499	600	...	B
	1.500–3.000	600	...	A
	3.001–6.000	1000	...	B

[A] Discontinuities in excess of those listed in this table shall be allowed if it is established that they will be removed by machining or that they are in noncritical areas.

[B] The discontinuity class limits are defined in Section 11 of Practice B 594.

13. Stress-Corrosion Resistance

13.1 Alloy 7075 in the T73-type tempers shall be capable of exhibiting no evidence of stress-corrosion cracking when subjected to the test specified in 13.2.

13.1.1 For lot-acceptable purposes, resistance to stress-corrosion cracking for each lot of material shall be established by testing the previously selected tension-test samples to the criteria in Table 4.

13.1.2 For surveillance purposes, each month the producer shall perform at least one test for stress-corrosion resistance in accordance with 13.2 in the T73 type temper, for each thickness range 0.750 in. and over listed in Table 1, produced that month. Each sample shall be taken from material considered acceptable in accordance with lot-acceptance criteria of Table 4. A minimum of three adjacent replicate specimens shall be taken from each sample and tested. The producer shall maintain records of all lots so tested and make them available for examination at the producer's facility.

13.2 The stress-corrosion cracking test shall be performed on material 0.750 in. and over in thickness as follows:

13.2.1 Specimens shall be stressed in tension in the short transverse direction with respect to grain flow and held at constant strain. The stress level shall be 75% of the specified minimum yield strength.

13.2.2 The stress-corrosion test shall be made in accordance with Test Method G 47.

13.2.3 There shall be no visual evidence of stress-corrosion cracking in any specimen, except that the retest provisions of 21.2 shall apply.

14. Cladding Thickness

14.1 The aluminum-alloy coating of Alclad 5056 wire shall have a minimum average thickness corresponding to 16% of the total cross-sectional area of the wire.

14.2 When the area of the coating is to be determined on finished wire, transverse cross sections of at least three wires from the lot shall be mounted to expose a transverse cross section and polished for examination with a metallurgical microscope. Using at least 100x magnification, the coating area in each sample shall be measured by use of a planimeter on the projected image, and the average of the measurements shall be taken as the area.

15. Dimensional Tolerances

15.1 Variations from specified dimensions for the material ordered shall not exceed the permissible variations specified in the following tables of ANSI H35.2.

Table No.	Title
9.1	Diameter, Round Wire and Rod
9.5	Thickness and Width, Rectangular Wire and Bar
9.6	Distance Across Flats, Square, Hexagonal and Octagonal Wire and Bar
9.7	Thickness and Width, Flattened Wire (Round Edge)
9.8	Thickness and Width, Flattened and Slit Wire
9.9	Length, Specific and Multiple
9.10	Twist, Bar in Straight Lengths
9.11	Straightness, Rod and Bar in Straight Lengths Other Than Screw Machine Stock
9.13	Flatness—Flat Surfaces
9.14	Angularity
9.15	Squareness of Saw Cuts

15.2 *Sampling for Inspection* — Examination for dimensional conformance shall be made to ensure conformance to the tolerance specified.

16. Finish

16.1 Unless otherwise specified, rod up to and including 3 in. in diameter and bar up to and including 2 in. thick (with maximum width for rectangles of 4 in.) shall be supplied cold finished. Rod and bar in larger sizes may be furnished either as rolled or cold finished, at the producer's or supplier's discretion.

17. Identification Marking of Product

17.1 When specified in the contract or purchase order, all material shall be marked in accordance with Practice B 666. In addition, 2000 and 7000 series alloys furnished in the T6, T651, T73, T7351, or T851 tempers shall also be marked with the lot number in at least one location on each piece.

18. Internal Quality

18.1 When specified by the purchaser at the time of placing the order, each bar 0.500 in. or greater in thickness or smallest dimension in Alloys 2014, 2024, 2219, and 7075 shall be tested in accordance with Practice B 594 to the discontinuity acceptance limits of Table 3.

19. General Quality

19.1 Unless otherwise specified, the material shall be supplied in the mill finish and shall be uniform as defined by the requirements of this specification and shall be commercially sound. Any requirement not so covered is subject to negotiation between the producer and the purchaser.

19.2 Each inspection lot of bar, rod, and wire shall be examined to determine conformance to this specification with respect to general quality and identification marking. On approval of the purchaser, however, the producer may use a system of statistical quality control for such examinations.

20. Source Inspection

20.1 If the purchaser desires that his representative inspect or witness the inspection and testing of the material prior to shipment, such agreement shall be made by the purchaser and producer as part of the purchase contract.

20.2 When such inspection or witness of inspection and testing is agreed upon, the producer shall afford the purchaser's representative all reasonable facilities to satisfy him that the material meets the requirements of this specification. Inspection and tests shall be conducted so there is no unnecessary interference with the producer's operations.

21. Rejection and Retest

21.1 If any material fails to conform to all of the applicable requirements of this specification, it shall be cause for rejection of the inspection lot.

TABLE 4
LOT ACCEPTANCE CRITERIA FOR RESISTANCE TO STRESS CORROSION

Lot Acceptance Criteria			
Alloy and Temper	Electrical Conductivity[A], % IACS	Level of Mechanical Properties	Lot Acceptance Status
7075–T73 and T7351	40.0 or greater	per specified requirements	acceptable
	38.0 through 39.9	per specified requirements and yield strength does not exceed minimum by more than 11.9 ksi	acceptable
	38.0 through 39.9	per specified requirements but yield strength exceeds minimum by 12.0 ksi or more	unacceptable[B]
	less than 38.0	any level	unacceptable[B]

Product[A,B]	Thickness, in.	Location
Rolled or cold finished from rolled stock	all	surface of tension-test sample
Cold finished from extruded stock	up through 0.100	surface of tension-test sample
	over 0.100 through 0.500	subsurface after removing approximately 10 % of the thickness by machining
	over 0.500 through 1.500	subsurface at approximate center of thickness on a plane parallel to the longitudinal centerline of the material
	over 1.500	subsurface of tension-test sample surface that is closest to the center of the material and on a plane parallel to the extrusion surface

[A] The electrical conductivity shall be determined in accordance with Test Method E 1004 in the following locations:
[B] When material is found to be unacceptable, it shall be reprocessed (additionl precipitation heat teatment or re-solution heat treatment, stress relieving and precipitation heat treatment, when applicable).

21.2 When there is evidence that a failed specimen was not representative of the inspection lot and when no other sampling plan is provided or approved by the purchaser through the contract or purchase order, at least two additional specimens shall be selected to replace each test specimen that failed. All specimens so selected for retest shall meet the requirements of the specification or the lot shall be subject to rejection.

21.3 Material in which defects are discovered subsequent to inspection may be rejected.

21.4 If material is rejected by the purchaser, the producer or supplier is responsible only for replacement of the material to the purchaser. As much as possible of the rejected material shall be returned to the producer or supplier.

22. Certification

22.1 The producer or supplier shall furnish to the purchaser a certificate of inspection stating that each lot has been sampled, tested, and inspected in accordance with this specification, and has been found to meet the requirements.

23. Packaging and Package Marking

23.1 The material shall be packaged to provide adequate protection during normal handling and transportation, and each package shall contain only one size, alloy, and temper of material unless otherwise agreed. The type of packing and gross weight of containers shall, unless otherwise agreed upon, be at the producer's discretion, provided that they are such as to ensure acceptance by common or other carriers for safe transportation at the lowest rate to the delivery point.

23.2 Each shipping container shall be marked with the purchase order number, material size, specification number, alloy and temper, gross and net weight, and the producer's name and trademark.

23.3 When specified in the contract or purchase order, material shall be preserved, packaged, and packed in accordance with the requirements of Practices B 660. The applicable levels shall be as specified in the contract or order. Marking for shipment of such material shall be in accordance with Fed. Std. No. 123 for civil agencies and MIL-STD-129 for military agencies.

24. Keywords

24.1 aluminum alloy; rolled or cold-finished bar; rolled or cold-finished rod; rolled or cold-finished wire

ANNEXES

(Mandatory Information)

A1. BASIS FOR INCLUSION OF PROPERTY LIMITS

A1.1 Limits are established at a level at which a statistical evaluation of the data indicates that 99% of the population obtained from all standard material meets the limit with 95% confidence. For the products described, mechanical property limits for the respective size ranges are based on the analyses of at least 100 data from standard production material with no more than ten data from a given lot. All tests are performed in accordance with the appropriate ASTM test methods. For informational purposes, refer to "Statistical Aspects of Mechanical Property Assurance" in the Related Material section of the *Annual Book of ASTM Standards*, Vol 02.02.

A2. ACCEPTANCE CRITERIA FOR INCLUSION OF NEW ALUMINUM AND ALUMINUM ALLOYS IN THIS SPECIFICATION

A2.1 Prior to acceptance for inclusion in this specification, the composition of wrought or cast aluminum or aluminum alloy shall be registered in accordance with ANSI H35.1. The Aluminum Association holds the Secretariat of ANSI H35 Committee and administers the criteria and procedures for registration.

A2.2 If it is documented that the Aluminum Association could not or would not register a given composition, an alternative procedure and the criteria for acceptance shall be as follows:

A2.2.1 The designation submitted for inclusion does not utilize the same designation system as described in ANSI H35.1. A designation not in conflict with other designation systems or a trade name is acceptable.

A2.2.2 The aluminum or aluminum alloy has been offered for sale in commercial quantities within the prior twelve months to at least three identifiable users.

A2.2.3 The complete chemical composition limits are submitted.

A2.2.4 The composition is, in the judgement of the responsible subcommittee, significantly different from that of any other aluminum or aluminum alloy already in the specification.

A2.2.5 For codification purposes, an alloying element is any element intentionally added for any purpose other than grain refinement and for which minimum and maximum limits are specified. Unalloyed aluminum contains a minimum of 99.00% aluminum.

A2.2.6 Standard limits for alloying elements and impurities are expressed to the following decimal places:

Less than 0.001%	0.000X
0.001 to but less than 0.01%	0.00X
0.01 to but less than 0.10%	
Unalloyed aluminum made by a refining process	0.0XX
Alloys and unalloyed aluminum not made by a refining process	0.0X
0.10 through 0.55%	0.XX
(It is customary to express limits of 0.30 through 0.55% as 0.X0 or 0.X5)	
Over 0.55%	0.X, X.X, etc.
(Except that combined Si + Fe limits for 99.00% minimum aluminum must be expressed as 0.XX or 1.XX)	

A2.2.7 Standard limits for alloying elements and impurities are expressed in the following sequence: Silicon; Iron; Copper; Manganese; Magnesium; Chromium; Nickel; Zinc (Note A2.1); Titanium; Other Elements, Each; Other Elements, Total; Aluminum (Note A2.2).

NOTE A2.1 — Additional specified elements having limits are inserted in alphabetical order of their chemical symbols between zinc and titanium, or are specified in footnotes.

NOTE A2.2 — Aluminum is specified as *minimum* for unalloyed aluminum and as a *remainder* for aluminum alloys.

SPECIFICATION FOR ALUMINUM AND ALUMINUM-ALLOY EXTRUDED BARS, RODS, AND PROFILES

SB-221

(Identical with ASTM Specification B 221-96 for the alloys, tempers, and product forms covered except for editorial differences. Certification has been made mandatory.)

1. Scope

1.1 This specification covers aluminum and aluminum-alloy extruded bar, rod, and profile in the aluminum alloys (Note 1) and tempers shown in Table 2.

NOTE 1 — Throughout this specification, the use of the term *alloy* in the general sense includes aluminum as well as aluminum alloy.

NOTE 2 — For rolled or cold-finished bar and rod refer to Specification SB-211, for drawn tube to Specification SB-210, for structural pipe and tube to Specification B 429, and for seamless pipe and tube to Specification SB-241/SB-241M.

1.2 Alloy and temper designations are in accordance with ANSI H35.1. The equivalent Unified Numbering System alloy designations are those of Table 1 preceded by A 9; for example, A91100 for Aluminum 1100 in accordance with Practice E 527.

1.3 For acceptance criteria for inclusion of new aluminum and aluminum alloys in this specification, see Annex A2.

1.4 A complete metric companion to B 221 has been developed — B 221M; therefore, no metric equivalents are presented in this specification.

2. Referenced Documents

2.1 The following documents of the issue in effect on the date of material purchase, unless otherwise noted, form a part of this specification to the extent referenced herein:

2.1.1 *ASTM Standards*

B 557 Test Methods of Tension Testing Wrought and Cast Aluminum- and Magnesium-Alloy Products
B 597 Practice for Heat Treatment of Aluminum Alloys
B 660 Practices for Packaging/Packing of Aluminum and Magnesium Products
B 666/B 666M Practice for Identification Marking of Aluminum Products
B 807 Practice for Extrusion Press Solution Heat Treatment of Aluminum Alloys
E 29 Practice for Using Significant Digits in Test Data to Determine Conformance With Specifications
E 34 Test Methods for Chemical Analysis of Aluminum and Aluminum-Base Alloys
E 55 Practice for Sampling Wrought Nonferrous Metals and Alloys for Determination of Chemical Composition
E 101 Test Method for Spectrographic Analysis of Aluminum and Aluminum Alloys by the Point-to-Plane Technique
E 227 Test Method for Optical Emission Spectrometric Analysis of Aluminum and Aluminum Alloys by the Point-to-Plane Technique
E 527 Practice for Numbering Metals and Alloys (UNS)
E 607 Test Method for Optical Emission Spectrometric Analysis of Aluminum and Aluminum Alloys by the Point-to-Plane Technique, Nitrogen Atmosphere
E 716 Practices for Sampling Aluminum and Aluminum Alloys for Spectrochemical Analysis

2.1.2 *ANSI Standards*

H35.1 Alloy and Temper Designation Systems for Aluminum
H35.2 Dimensional Tolerances for Aluminum Mill Products

2.1.3 *Federal Standard*

Fed. Std. No. 123 Marking for Shipment (Civil Agencies)

2.1.4 *Military Standard*

MIL-STD-129 Marking for Shipment and Storage

2.1.5 *Military Specification*

MIL-H-6088 Heat Treatment of Aluminum Alloys

3. Terminology

3.1 *Definitions*

3.1.1 *extruded bar* — an extruded solid product that is long in relation to cross section, which is square or rectangular (excluding plate and flattened wire) with sharp or rounded corners or edges, or is a regular hexagon or octagon, and in which at least one perpendicular distance between parallel faces is 0.375 in. or greater

3.1.2 *extruded rod* — an extruded solid product 0.375 in. or greater in diameter that is long in relation to cross section

3.1.3 *extruded profile* — a hollow or solid extruded section, long in relation to its cross-sectional dimensions, whose cross section is other than that of wire, rod, bar, or tube

3.1.4 *producer* — the primary manufacturer of the material

3.1.5 *supplier* — includes only the category of jobbers and distributors as distinct from producers

3.2 *Description of Term Specific to This Standard:*

3.2.1 *capable of* — The term *capable of* as used in this specification means that the test need not be performed by the producer of the material. However, should subsequent testing by the purchaser establish that the material does not meet these requirements, the material shall be subject to rejection.

4. Ordering Information

4.1 Orders for material to this specification shall include the following information:

4.1.1 this specification designation (which includes the number, the year, and the revision letter, if applicable);

4.1.2 quantity in pieces or pounds;

4.1.3 alloy (Section 7 and Table 1);

4.1.4 temper (Section 8 and Table 2);

4.1.5 nominal cross-sectional dimensions as follows:

4.1.5.1 for rod — diameter;

4.1.5.2 for square-cornered bar — depth and width;

4.1.5.3 for sharp-cornered hexagonal or octagonal bar — distance across flats;

4.1.5.4 for round-cornered bars and profiles — drawing required; and

4.1.6 length.

4.2 Additionally, orders for material to this specification shall include the following information when required by the purchaser:

4.2.1 whether heat treatment in accordance with Practice B 597 is required (9.2);

4.2.2 whether inspection or witness of inspection and tests by the purchaser's representative is required prior to material shipment (Section 12);

4.2.3 whether marking for identification is required (Section 15), and whether marking of lot number for alloy 2024 in the T3-type temper and alloy 6061 in the T6-type temper is required (15);

4.2.4 whether Practices B 660 applies and, if so, the levels of preservation, packaging, and packing required (16); and

4.2.5 requirements for tensile property and dimensional tolerance for sizes not specifically covered (8.1.3 and 10.1.1).

5. Materials and Manufacture

5.1 The products covered by this specification shall be produced by the hot extrusion method or by similar methods at the option of the producer, provided that the resulting products comply with the requirements in this specification.

6. Quality Assurance

6.1 *Responsibility for Inspection and Tests* — Unless otherwise specified in the contract or purchase order, the producer is responsible for the performance of all inspection and test requirements specified herein. The producer may use his own or any other suitable facilities for the performance of the inspection and test requirements specified herein, unless disapproved by the purchaser in the order or at the time of contract signing. The purchaser shall have the right to perform any of the inspections and tests set forth in this specification where such inspections are deemed necessary to ensure that material conforms to prescribed requirements.

6.2 *Lot Definition* — An inspection lot shall be defined as follows.

6.2.1 For heat-treated tempers, an inspection lot shall consist of an identifiable quantity of material of the same mill form, alloy, temper, and nominal dimensions traceable to a heat-treat lot or lots, and subjected to inspection at one time.

6.2.2 For nonheat-treated tempers, an inspection lot shall consist of an identifiable quantity of material of

the same mill form, alloy, temper, and nominal dimensions subjected to inspection at one time.

7. Chemical Composition

7.1 *Limits*

7.1.1 The material shall conform to the chemical composition limits in Table 1. Conformance shall be determined by analyzing samples taken when the ingots are poured, or samples taken from the finished or semifinished product. If the chemical composition has been determined during the course of manufacture, analysis of the finished product shall not be required.

NOTE 3 — It is standard practice in the United States aluminum industry to determine conformance to the chemical composition limits prior to further processing of ingots into wrought products. Due to the continuous nature of the process, it is not practical to keep a specific ingot analysis identified with a specific quantity of finished material.

7.2 *Number of Samples*

7.2.1 The number of samples taken for determination of chemical composition shall be as follows.

7.2.1.1 When samples are taken at the time the ingots are poured, at least one sample shall be taken for each group of ingots poured simultaneously from the same source of molten metal.

7.2.1.2 When samples are taken from the finished or semifinished product, a sample shall be taken to represent each 4,000 lb, or fraction thereof, in the lot, except that not more than one sample shall be required per piece.

7.3 *Methods of Sampling*

7.3.1 Samples for determination of chemical composition shall be taken in accordance with one of the following methods.

7.3.1.1 Samples for chemical analysis shall be taken from the material by drilling, sawing, milling, turning, or clipping a representative piece or pieces to obtain a prepared sample of not less than 75 g. Sampling shall be in accordance with Practice E 55.

7.3.1.2 Sampling for spectrochemical analysis shall be in accordance with Practices E 716. Samples for other methods of analysis shall be suitable for the form of material being analyzed and the type of analytical method used.

7.4 *Methods of Analysis* — The determination of chemical composition shall be made in accordance with suitable chemical (Test Methods E 34) or spectrochemical (Test Methods E 101, E 227, or E 607) or other methods. Other methods may be used only when no published ASTM method is available. In case of dispute, the methods of analysis shall be agreed upon between the producer and purchaser.

8. Tensile Properties of Material From the Producer

8.1 *Limits* — The material shall conform to the tensile property requirements specified in Table 2.

8.1.1 The elongation requirements shall not be applicable to the following:

8.1.1.1 material of such dimensions that a standard test specimen cannot be taken in accordance with Test Methods B 557, and of such profile that it cannot be satisfactorily tested in full section;

8.1.1.2 material thinner than 0.062 in.; and

8.1.1.3 wire less than 0.125 in. in diameter.

8.1.2 The measurement for yield strength is not required for wire less than 0.125 in. in diameter.

8.1.3 Tensile property limits for sizes not covered in Table 2 shall be as agreed upon between the producer and purchaser and shall be so specified in the contract or purchase order.

8.2 *Number of Specimens*

8.2.1 For material having a nominal weight of less than 1 lb/linear ft, one tension test specimen shall be taken for each 1,000 lb or fraction thereof in the lot.

8.2.2 For material having a nominal weight of 1 lb or more per linear foot, one tension test specimen shall be taken for each 1,000 ft or fraction thereof in the lot.

8.2.3 Other procedures for selecting samples may be employed if agreed upon between the producer or supplier and the purchaser.

8.3 Geometry of test specimens and the location in the product from which they are taken shall be as specified in Test Methods B 557.

8.4 *Test Methods* — The tension tests shall be made in accordance with Test Methods B 557.

8.5 *Retests* — When there is evidence that the test specimen is defective or is not representative of the lot of material, retesting may be performed in accordance with Sections 8 and 9 of Test Methods B 557.

9. Heat Treatment

9.1 Except as noted in 9.3, or otherwise specified in 9.2, producer or supplier heat treatment for the applicable tempers in Table 2 shall be in accordance with ML-H-6088.

9.2 When specified, heat treatment of applicable tempers in Table 2 shall be in accordance with Practice B 597.

TABLE 1
CHEMICAL COMPOSITION LIMITS [NOTES (1), (2), (3)]

Alloy	Silicon	Iron	Copper	Manganese	Magnesium	Chromium	Zinc	Vanadium	Titanium	Other Elements [Note (4)]		Aluminum
										Each	Total [Note (5)]	
1060	0.25	0.35	0.05	0.03	0.03	...	0.05	0.05	0.03	0.03	...	99.60 min. [Note (6)]
1100	0.95 Si + Fe		0.05–0.20	0.05	...	...	0.10	...	...	0.05	0.15	99.00 min. [Note (6)]
2024	0.50	0.50	3.8–4.9	0.30–0.9	1.2–1.8	0.10	0.25	...	0.15 [Note (7)]	0.05	0.15	Remainder
3003	0.6	0.7	0.05–0.20	1.0–1.5	...	...	0.10	...	...	0.05	0.15	Remainder
5083	0.40	0.40	0.10	0.40–1.0	4.0–4.9	0.05–0.25	0.25	...	0.15	0.05	0.15	Remainder
5086	0.40	0.50	0.10	0.20–0.7	3.5–4.5	0.05–0.25	0.25	...	0.15	0.05	0.15	Remainder
5154	0.25	0.40	0.10	0.10	3.1–3.9	0.15–0.35	0.20	...	0.20	0.05	0.15	Remainder
5454	0.25	0.40	0.10	0.50–1.0	2.4–3.0	0.05–0.20	0.25	...	0.20	0.05	0.15	Remainder
5456	0.25	0.40	0.10	0.50–1.0	4.7–5.5	0.05–0.20	0.25	...	0.20	0.05	0.15	Remainder
6061 [Note (8)]	0.40–0.8	0.7	0.15–0.40	0.15	0.8–1.2	0.04–0.35	0.25	...	0.15	0.05	0.15	Remainder
6063	0.20–0.6	0.35	0.10	0.10	0.45–0.9	0.10	0.10	...	0.10	0.05	0.15	Remainder

NOTES:

(1) Limits are in weight percent maximum unless shown as a range, or stated otherwise.

(2) Analysis shall regularly be made for the elements specified in this Table. If, however, the presence of other elements is suspected or indicated in amounts greater than the specified limits, further analysis shall be made to determine that these elements are not present in amounts in excess of the specified limits.

(3) For the purpose of determining conformance to these limits, an observed value or a calculated value obtained from analysis shall be rounded to the nearest unit in the last right-hand place of the figures used in expressing the specified limit, in accordance with the rounding-off method of Practice E 29.

(4) Includes listed element for which no specific limit is shown.

(5) Other Elements—Total shall be the sum of unspecified metallic elements 0.010% or more, rounded to the second decimal before determining the sum.

(6) The aluminum content shall be calculated by subtracting from 100.00% the sum of all metallic elements present in amounts of 0.010% or more each, rounded to the second decimal before determining the sum.

(7) Upon agreement between the purchaser and producer or supplier, a Zr + Ti limit of 0.20% max is permitted.

(8) In 1965 the requirements for 6062 were combined with those for 6061 by revising the minimum chromium from 0.15% to 0.04%. This action cancelled alloy 6062.

TABLE 2
MECHANICAL PROPERTY LIMITS [NOTES (1), (2)]

Temper	Specified Section or Wall Thickness, in.	Area, in. [2]	Tensile Strength, ksi Min.	Tensile Strength, ksi Max	Yield Strength (0.2% Offset), ksi Min.	Yield Strength (0.2% Offset), ksi Max	Elongation in 2 in. or 4 × Dia, Min., % [Notes (3), (4)]
			Aluminum 1060				
O	All	All	8.5	14.0	2.5	...	25
H112	All	All	8.5	...	2.5	...	25
			Aluminum 1100				
O	All	All	11.0	15.5	3.0	...	25
H112	All	All	11.0	...	3.0	...	25
			Alloy 2024				
T3	Up through 0.249	All	57.0	...	42.0	...	12
	0.250–0.749	All	60.0	...	44.0	...	12
	0.750–1.499	All	65.0	...	46.0	...	10
	1.500 and over	Up through 25	70.0	...	52.0	...	10
		Over 25 through 32	68.0	...	48.0	...	8
			Alloy 3003				
O	All	All	14.0	19.0	5.0	...	25
H112	All	All	14.0	...	5.0	...	25
			Alloy 5083				
O	Up through 5.000	Up through 32	39.0	51.0	16.0	...	14
H111	Up through 5.000	Up through 32	40.0	...	24.0	...	12
H112	Up through 5.000	Up through 32	39.0	...	16.0	...	12
			Alloy 5086				
H112	Up through 5.000	Up through 32	35.0	...	14.0	...	12
			Alloy 5154				
O	All	All	30.0	41.0	11.0	...	...
H112	All	All	30.0	...	11.0	...	...
			Alloy 5454				
O	Up through 5.000	Up through 32	31.0	41.0	12.0	...	14
H111	Up through 5.000	Up through 32	33.0	...	19.0	...	12
H112	Up through 5.000	Up through 32	31.0	...	12.0	...	12
			Alloy 5456				
O	Up through 5.000	Up through 32	41.0	53.0	19.0	...	14
H111	Up through 5.000	Up through 32	42.0	...	26.0	...	12
H112	Up through 5.000	Up through 32	41.0	...	19.0	...	12
			Alloy 6061				
T4	All	All	26.0	...	16.0	...	16
T4510 [Note (5)]	All	All	26.0	...	16.0	...	16
T4511 [Note (5)]	All	All	26.0	...	16.0	...	16
T6	Up through 0.249	All	38.0	...	35.0	...	8
	0.250 and over	All	38.0	...	35.0	...	10
T6510 [Note (5)]	Up through 0.249	All	38.0	...	35.0	...	8
	0.250 and over	All	38.0	...	35.0	...	10

TABLE 2 (CONT'D)
MECHANICAL PROPERTY LIMITS [NOTES (1), (2)]

Temper	Specified Section or Wall Thickness, in.	Area, in.^{2}	Tensile Strength, ksi Min.	Tensile Strength, ksi Max	Yield Strength (0.2% Offset), ksi Min.	Yield Strength (0.2% Offset), ksi Max	Elongation in 2 in. or 4 × Dia, Min., % [Notes (3), (4)]
			Alloy 6061 (Cont'd)				
T6511 [Note (5)]	Up through 0.249	All	38.0	...	35.0	...	8
	0.250 and over	All	38.0	...	35.0	...	10
			Alloy 6063				
T1	Up through 0.500	All	17.0	...	9.0	...	12
	0.501–1.000	All	16.0	...	8.0	...	12
T5	Up through 0.500	All	22.0	...	16.0	...	8
	0.501–1.000	All	21.0	...	15.0	...	8
T6	Up through 0.124	All	30.0	...	25.0	...	8
	0.125–1.000	All	30.0	...	25.0	...	10

GENERAL NOTE: Strength values shown in parentheses are for information only.

NOTES:
(1) The basis for establishment of tensile property limits is shown in Annex A1.
(2) To determine conformance to this specification, each value shall be rounded to the nearest 0.1 ksi for strength and nearest 0.5% for elongation in accordance with the rounding-off method of Practice E 29.
(3) Elongation of full-section and cut-out sheet-type specimens is measured in 2 in. Elongation of cut-out round specimens is measured in 4 × specimen diameter.
(4) See 8.1.1.1 and 8.1.1.2 for conditions under which measurements are not required.
(5) For stress relieved tempers (T3510, T3511, T4510, T4511, T6510, T6511), characteristics and properties other than those specified may differ somewhat from the corresponding characteristics and properties of material in the basic tempers.

9.3 Alloys 6061 and 6063 may be solution heat treated and quenched at the extrusion press in the production of T1, T4, T5, and T6-type tempers as applicable.

10. Dimensional Tolerances

10.1 *Dimensions* — Variations from the specified dimensions for the type of material ordered shall not exceed the permissible variations prescribed in the tables of ANSI H35.2 (see Table 3).

10.1.1 Dimensional tolerances for sizes not covered in ANSI H35.2 shall be agreed upon between the producer and purchaser and shall be specified in the contract or purchase order.

10.2 *Sampling for Inspection* — Examination for dimensional conformance shall be made to ensure conformance to the tolerance specified.

11. General Quality

11.1 Unless otherwise specified, the extruded bar, rod, and profile shall be supplied in the mill finish and shall be uniform as defined by the requirements of this specification and shall be commercially sound. Any requirement not so covered is subject to negotiation between the producer and purchaser.

TABLE 3
TABLES OF ANSI H35.2

Table No.	Title
10.1	Cross-Spectional Dimensions: Wire, Rod, Bar & Profiles Except for Profiles in T3510, T4510, T6510, T73510, T76510, and T8510 Tempers
10.2	Length: Wire, Rod, Bar, and Profiles
10.3	Straightness: Rod, Bar, and Profiles
10.4	Twist: Bar and Profiles
10.5	Flatness: Flat Surfaces
10.6	Flatness: Flat Surfaces, Hollow Profiles Except for O, T3510, T4510, T6510, T73510, T76510, and T8510 Tempers
10.7	Surface Roughness: Wire, Rod, Bar, and Profiles
10.8	Contour (Curved Surfaces): Profiles Except for O, T3510, T4510, T6510, T73510, T76510, and T8510 Tempers
10.9	Squareness of Cut Ends: Wire, Rod, Bar, and Profiles
10.10	Corner and Fillet Radii: Bar and Profiles
10.11	Angularity: Bar and Profiles Except for O, T3510, T4510, T6510, T73510, T76510, and T8510 Tempers

11.2 Each bar, rod, or profile shall be examined to determine conformance to this specification with respect to general quality and identification marking. On approval of the purchaser, however, the producer or the supplier may use a system of statistical quality control for such examination.

12. Source Inspection

12.1 If the purchaser desires that his representative inspect or witness the inspection and testing of the material prior to shipment, such agreement shall be made by the purchaser and the producer or supplier as part of the purchase contract.

12.2 When such inspection or witness of inspection and testing is agreed upon, the producer or supplier shall afford the purchaser's representative all reasonable facilities to satisfy him that the material meets the requirements of this specification. Inspection and tests shall be conducted so there is no unnecessary interference with the producer's or supplier's operations.

13. Retest and Rejection

13.1 If any material fails to conform to all of the applicable requirements of this specification, it shall be cause for rejection of the inspection lot.

13.2 When there is evidence that a failed specimen was not representative of the inspection lot and when no other sampling plan is provided or approved by the purchaser through the contract or purchase order, at least two additional specimens shall be selected to replace each test specimen that failed. All specimens so selected for retest shall meet the requirements of the specification or the lot shall be subject to rejection.

13.3 Material in which defects are discovered subsequent to inspection may be rejected.

13.4 If material is rejected by the purchaser, the producer or supplier is responsible only for replacement of the material to the purchaser. As much as possible of the rejected material shall be returned to the producer or supplier by the purchaser.

14. Certification

14.1 The producer or supplier shall furnish to the purchaser a certificate stating that each lot has been sampled, tested, and inspected in accordance with this specification, and has met the requirements.

15. Identification Marking of Product

15.1 When specified in the contract or purchase order, all material shall be marked in accordance with Practice B 666.

15.2 The requirements specified in 15.1 are minimum; marking systems that involve added information, larger characters, and greater frequencies are acceptable under this specification and shall be agreed upon between the producer and purchaser.

16. Packaging and Package Marking

16.1 The material shall be packaged to provide adequate protection during normal handling and transportation and each package shall contain only one size, alloy, and temper of material unless otherwise agreed upon. The type of packing and gross weight of containers shall, unless otherwise agreed upon, be at the producer or supplier's discretion, provided they are such as to ensure acceptance by common or other carriers for safe transportation at the lowest rate to the delivery point.

16.2 Each shipping container shall be marked with the purchase order number, material size, specification number, alloy and temper, gross and net weights, and the producer's name or trademark.

16.3 When specified in the contract or purchase order, material shall be preserved, packaged and packed in accordance with the requirements of Practices B 660. The applicable level shall be as specified in the contract or order. Marking for shipment of such material shall be in accordance with Fed. Std. No. 123 for civil agencies and MIL-STD-129 for Military agencies.

17. Keywords

17.1 aluminum alloy; extruded bars; extruded profiles; extruded rods

ANNEXES

(Mandatory Information)

A1. BASIS FOR INCLUSION OF PROPERTY LIMITS

A1.1 Limits are established at a level at which a statistical evaluation of the data indicates that 99% of the population obtained from all standard material meets the limit with 95% confidence. For the products described, mechanical property limits for the respective size ranges are based on the analyses of at least 100 data from standard production material with no more than ten data from a given lot. All tests are performed in accordance with the appropriate ASTM test methods. For informational purposes, refer to "Statistical Aspects of Mechanical Property Assurance" in the Related Material section of the *Annual Book of ASTM Standards*, Vol 02.02.

A2. ACCEPTANCE CRITERIA FOR INCLUSION OF NEW ALUMINUM AND ALUMINUM ALLOYS IN THIS SPECIFICATION

A2.1 Prior to acceptance for inclusion in this specification, the composition of wrought or cast aluminum or aluminum alloy shall be registered in accordance with ANSI H35.1. The Aluminum Association holds the Secretariat of ANSI H35 Committee and administers the criteria and procedures for registration.

A2.2 If it is documented that the Aluminum Association could not or would not register a given composition, an alternative procedure and the criteria for acceptance shall be as follows.

A2.2.1 The designation submitted for inclusion does not utilize the same designation system as described in ANSI H35.1. A designation not in conflict with other designation systems or a trade name is acceptable.

A2.2.2 The aluminum or aluminum alloy has been offered for sale in commercial quantities within the prior twelve months to at least three identifiable users.

A2.2.3 The complete chemical composition limits are submitted.

A2.2.4 The composition is, in the judgment of the responsible subcommittee, significantly different from that of any other aluminum or aluminum alloy already in the specification.

A2.2.5 For codification purposes, an alloying element is any element intentionally added for any purpose other than grain refinement and for which minimum and maximum limits are specified. Unalloyed aluminum contains a minimum of 99.00% aluminum.

A2.2.6 Standard limits for alloying elements and impurities are expressed to the following decimal places:

Less than 0.001%	0.000X
0.001 to but less than 0.01%	0.00X
0.01 to but less than 0.10%	
Unalloyed aluminum made by a refining process	0.0XX
Alloys and unalloyed aluminum not made by a refining process	0.0X
0.10 through 0.55%	0.XX
(It is customary to express limits of 0.30 through 0.55% as 0.X0 or 0.X5.)	
Over 0.55%	0.X, X.X, etc.
(except that combined Si+Fe limits for 99.00% minimum aluminum must be expressed as 0.XX or 1.XX)	

A2.2.7 Standard limits for alloying elements and impurities are expressed in the following sequence: Silicon; Iron; Copper; Manganese; Magnesium; Chromium; Nickel; Zinc (Note A2.1); Titanium; Other Elements, Each; Other Elements, Total; Aluminum (Note A2.2).

NOTE A2.1 — Additional specified elements having limits are inserted in alphabetical order of their chemical symbols between zinc and titanium, or are specified in footnotes.

NOTE A2.2 — Aluminum is specified as *minimum* for unalloyed aluminum and as *a remainder* for aluminum alloys.

SPECIFICATION FOR ALUMINUM AND ALUMINUM-ALLOY DRAWN SEAMLESS TUBES FOR CONDENSERS AND HEAT EXCHANGERS

SB-234

(Identical with ASTM B 234-95 except for editorial differences. Certification has been made mandatory.)

1. Scope

1.1 This specification covers aluminum-alloy (Note 1) drawn seamless round tube in straight lengths designated as shown in Table 2, for use in surface condensers, evaporators, and heat exchangers.

NOTE 1 — Throughout this specification use of the term *alloy* in the general sense includes aluminum as well as aluminum alloy.

NOTE 2 — For drawn seamless tubes used in general applications, see Specification SB-210; for extruded tubes see Specification SB-221; for seamless pipe see Specification SB-241/SB-241M; and for structural pipe and tube see Specification B 429.

1.2 Alloy and temper designations are in accordance with ANSI H35.1. The equivalent Unified Numbering System alloy designations are those of Table 1 preceded by A9, for example, A91060 for aluminum 1060, in accordance with Practice E 527.

1.3 A complete metric companion to Specification B 234 has been developed — B234M; therefore, no metric equivalents are presented in this specification.

1.4 For acceptance criteria for inclusion of new aluminum and aluminum alloys in this specification, see Annex A2.

2. Referenced Documents

2.1 The following documents of the issue in effect on date of material purchase form a part of this specification to the extent referenced herein:

2.1.1 *ASTM Standards*

B 557 Test Methods of Tension Testing Wrought and Cast Aluminum- and Magnesium-Alloy Products

B 597 Practice for Heat Treatment of Aluminum Alloys

B 660 Practices for Packaging/Packing of Aluminum and Magnesium Products

B 666 Practice for Identification Marking of Aluminum Products

E 29 Practice for Using Significant Digits in Test Data to Determine Conformance With Specifications

E 34 Test Methods for Chemical Analysis of Aluminum and Aluminum-Base Alloys

E 55 Practice for Sampling Wrought Nonferrous Metals and Alloys for Determination of Chemical Composition

E 101 Test Method for Spectrographic Analysis of Aluminum and Aluminum Alloys by the Point-to-Plane Technique

E 215 Practice for Standardizing Equipment for Electromagnetic Examination of Seamless Aluminum-Alloy Tube

E 227 Test Method for Optical Emission Spectrometric Analysis of Aluminum and Aluminum Alloys by the Point-to-Plane Technique

E 527 Practice for Numbering Metals and Alloys (UNS)

E 607 Test Method for Optical Emission Spectrometric Analysis of Aluminum and Aluminum Alloys by the Point-to-Plane Technique, Nitrogen Atmosphere

E 716 Practices for Sampling Aluminum and Aluminum Alloys for Spectrochemical Analysis

E 1251 Test Method for Optical Emission Spectrometric Analysis of Aluminum and Aluminum Alloys by the Argon Atmosphere, Point-to-Plane, Unipolar Self-Initiating Capacitor Discharge

2.1.2 *ANSI Standards*

H35.1 Alloy and Temper Designation Systems for Aluminum

H35.2 Dimensional Tolerances for Aluminum Mill Products

2.1.3 *Federal Standard*

Fed. Std. No. 123 Marking for Shipment (Civil Agencies)

2.1.4 *Military Standard*

MIL-STD-129 Marking for Shipment and Storage

2.1.5 *Military Specification*

MIL-H-6088 Heat Treatment of Aluminum Alloys

3. Terminology

3.1 *Definitions*

3.1.1 *tube* — a hollow wrought product that is long in relation to its cross section, which is round, a regular hexagon, a regular octagon, elliptical, or square or rectangular with sharp or rounded corners, and that has uniform wall thickness except as may be affected by corner radii

3.1.2 *drawn seamless tube* — a tube produced from hollow ingot and brought to final dimensions by drawing through a die

3.1.3 *alclad tube* — a composite tube product composed of an aluminum alloy core having on either the inside or outside surface a metallurgically bonded aluminum or aluminum alloy coating that is anodic to the core, thus electrolytically protecting the core against corrosion

3.1.4 *heat exchange tube* — a tube for use in apparatus in which fluid inside the tube will be heated or cooled by fluid outside the tube. The term usually is not applied to coiled tube or to tube for use in refrigerators or radiators.

3.1.5 *producer* — the primary manufacturer of the material

3.1.6 *supplier* — includes only the category of jobbers and distributors as distinct from producers

3.2 *Description of Term Specific to This Standard*

3.2.1 *capable of* — The term *capable of* as used in this specification means that the test need not be performed by the producer of the material. However, should testing by the purchaser establish that the material does not meet these requirements, the material shall be subject to rejection.

4. Ordering Information

4.1 Orders for material to this specification shall include the following information:

4.1.1 this specification designation (which includes the number, the year, and the revision letter, if applicable;

4.1.2 quantity in pieces or pounds;

4.1.3 alloy (Section 7);

4.1.4 temper (Section 8);

4.1.5 outside or inside diameter, wall thickness, and length; and

4.1.6 For alloy Alclad 3003, state clad inside or outside (12.1).

4.2 Additionally, orders for material to this specification shall include the following information when required by the purchaser:

4.2.1 whether heat treatment in accordance with Practice B 597 is required (9.2);

4.2.2 whether cut ends of tube are to be deburred (Section 14);

4.2.3 whether inspection or witness of inspection and tests by the purchaser's representative is required prior to material shipment (Section 15);

4.2.4 whether marking for identification is required (Section 18); and

4.2.5 whether Practices B 660 applies and, if so, the level of preservation, packaging, and packing required (19.3).

5. Manufacture

5.1 The tube shall be produced by drawing an extruded tube made from hollow extrusion ingot (cast in hollow form or pierced) and extruded by use of the die and mandrel method.

6. Responsibility for Quality Assurance

6.1 *Responsibility for Inspection and Tests* — Unless otherwise specified in the contract or purchase order, the producer is responsible for the performance of all inspection and test requirements specified herein. The producer may use his own or any other suitable facilities for the performance of the inspection and test requirements specified herein, unless disapproved by the purchaser in the order or at the time of contract signing. The purchaser shall have the right to perform any of the inspections and tests set forth in this specification where such inspections are deemed necessary to assure that material conforms to prescribed requirements.

6.2 *Lot Definition* — An inspection lot shall be defined as follows:

6.2.1 For heat-treated tempers, an inspection lot shall consist of an identifiable quantity of material of the same mill form, alloy, temper, and thickness traceable to a heat-treat lot or lots, and subjected to inspection at one time.

6.2.2 For nonheat-treated tempers, an inspection lot shall consist of an identifiable quantity of material of the same mill form, alloy, temper, and thickness subjected to inspection at one time.

7. Chemical Composition

7.1 *Limits* — The tube shall conform to the chemical composition limits in Table 1. Conformance shall be determined by the producer by analyzing samples taken at the time the ingots are poured, or samples taken from the finished or semi-finished product. If the producer has determined the chemical composition of the material during the course of manufacture, he shall not be required to sample and analyze the finished product.

NOTE 3 — It is standard practice in the United States aluminum industry to determine conformance to the chemical composition limits prior to further processing of ingots into wrought products. Due to the continuous nature of the process, it is not practical to keep a specific ingot analysis identified with a specific quantity of finished material.

7.2 *Number of Samples* — The number of samples taken for determination of chemical composition shall be as follows.

7.2.1 When samples are taken at the time the ingots are poured, at least one sample shall be taken for each group of ingots poured simultaneously from the same source of molten metal.

7.2.2 When samples are taken from the finished or semi-finished product, a sample shall be taken to represent each 4,000 lb or fraction thereof of material in the lot, except that not more than one sample shall be required per piece.

7.3 *Methods of Sampling* — Samples for determination of chemical composition shall be taken in accordance with one of the following methods.

7.3.1 Samples of chemical analysis shall be taken by drilling, sawing, milling, turning, clipping, etc., a representative piece or pieces to obtain a prepared sample of not less than 75 g. Sampling shall be in accordance with Practice E 55.

7.3.2 Sampling for spectrochemical analysis shall be in accordance with Practices E 716. Samples for other methods of analysis shall be suitable for the form of material being analyzed and the type of analytical method used.

NOTE 4 — It is difficult to obtain a reliable analysis of each of the components of clad materials using material in its finished state. A reasonably accurate determination of the core composition can be made if the cladding is substantially removed prior to analysis. The cladding composition is more difficult to determine because of the relatively thin layer and because of diffusion of core elements to the cladding. The correctness of cladding alloy used can usually be verified by a combination of metallographic examination and spectrochemical analysis of the surface at several widely separated points.

7.4 *Methods of Analysis* — The determination of chemical composition shall be made in accordance with suitable chemical (Test Methods E 34), or spectrochemical (Test Methods E 101, E 227, E 607, and E 1251) methods. Other methods may be used only when no published ASTM method is available. In case of dispute, the methods of analysis shall be agreed upon between the producer and purchaser.

8. Tensile Properties of Material as Supplied

8.1 *Limits* — The tube shall conform to the tensile property requirements in Table 2.

8.2 *Number of Specimens*

8.2.1 For material having a nominal weight of less than 1 lb/linear ft, one tension test specimen shall be taken for each 1,000 lb or fraction thereof in the lot.

8.2.2 For material having a nominal weight of 1 lb or more/linear ft, one tension test specimen shall be taken for each 1,000 ft or fraction thereof in the lot.

8.2.3 Other procedures for selecting samples may be employed if agreed upon by the producer and the purchaser.

8.3 *Test Methods* — The tension tests shall be made in accordance with Test Methods B 557.

9. Heat Treatment

9.1 Unless otherwise specified in 9.2, producer or supplier heat treatment for the applicable tempers in Table 2 shall be in accordance with MIL-H-6088.

9.2 When specified, heat treatment of applicable tempers in Table 2 shall be in accordance with Practice B 597.

10. Leak Test

10.1 Each length of tube 1.5 in. or less in diameter shall be tested by either of the following methods, at the option of the producer or supplier, consistent with the size limitations indicated:

10.1.1 *Method 1* — applicable to tube with a wall thickness of 0.200 in. max. Each tube shall be subjected to an internal air gage pressure of 250 psi for 5 s while immersed in a suitable liquid. Any evidence of leakage shall be cause for rejection.

10.1.2 *Method 2* — applicable to tube with a wall thickness of 0.083 in. maximum, as covered by Practice

TABLE 1
CHEMICAL COMPOSITION LIMITS [NOTES (1), (2), (3)]

Alloy	Silicon	Iron	Copper	Manganese	Magnesium	Chromium	Zinc	Titanium	Other Elements [Note (4)] Each	Other Elements [Note (4)] Total [Note (5)]	Aluminum
1060	0.25	0.35	0.05	0.03	0.03	...	0.05	0.03	0.03 [Note (6)]	...	99.60 min. [Note (7)]
3003	0.6	0.7	0.05–0.20	1.0–1.5	...	...	0.10	...	0.05	0.15	Remainder
Alclad 3003	3003 alloy clad with 7072 alloy										
5052	0.25	0.40	0.10	0.10	2.2–2.8	0.15–0.35	0.10	...	0.05	0.15	Remainder
5454	0.25	0.40	0.10	0.50–1.0	2.4–3.0	0.05–0.20	0.25	0.20	0.05	0.15	Remainder
6061	0.40–0.8	0.7	0.15–0.40	0.15	0.8–1.2	0.04–0.35	0.25	0.15	0.05	0.15	Remainder
7072 [Note (8)]	0.7 Si+Fe		0.10	0.10	0.10	...	0.8–1.3	...	0.05	0.15	Remainder

NOTES:

(1) Limits are in percent maximum unless shown as a range or otherwise stated.

(2) Analysis shall regularly be made only for the elements specified in this Table. If, however, the presence of other elements is suspected or indicated in amounts greater than the specified limits, further analysis shall be made to determine that these elements are not present in excess of the specified limits.

(3) For purposes of determining conformance to these limits, an observed value or a calculated value attained from analysis shall be rounded to the nearest unit in the last right-hand place of figures used in expressing the specified limit, in accordance with the rounding-off method of Practice E 29.

(4) Includes listed elements for which no specific limit is shown.

(5) Other Elements — Total shall be the sum of unspecified metallic elements 0.010% or more, rounded to the second decimal before determining the sum.

(6) Vanadium 0.05 max.

(7) The aluminum content shall be calculated by subtracting from 100.00% the sum of all the metallic elements present in amounts of 0.010% or more, rounded to the second decimal before determining the sum.

(8) Composition of cladding alloy as applied during the course of manufacture. The sample from finished tube shall not be required to conform to these limits.

TABLE 2
TENSILE PROPERTY LIMITS [NOTES (1), (2)]

Alloy	Temper	Wall Thickness, in.	Tensile Strength, Min., ksi	Yield Strength (0.2% Offset), Min., ksi	Elongation in 2 in., or 4 x Dia [Note (3)], Min., %	
					Full-Section Specimen	Cut-Out Specimen
1060	H14	0.010–0.200	12.0	10.0	...	...
3003	H14	0.010–0.024	20.0	17.0	3	...
		0.025–0.049	20.0	17.0	5	3
		0.050–0.200	20.0	17.0	8	4
	H25	0.010–0.200	22.0	19.0	...	...
Alclad 3003	H14	0.010–0.024	19.0	16.0	...	...
		0.025–0.049	19.0	16.0	5	3
		0.050–0.200	19.0	16.0	8	4
	H25	0.010–0.200	21.0	18.0	...	...
5052	H32	0.010–0.200	31.0	23.0	...	...
	H34	0.010–0.200	34.0	26.0	...	...
5454	H32	0.010–0.050	36.0	26.0	...	5
		0.051–0.200	36.0	26.0	...	8
	H34	0.010–0.050	39.0	29.0	...	4
		0.051–0.200	39.0	29.0	...	6
6061	T4	0.025–0.049	30.0	16.0	16	14
		0.050–0.200	30.0	16.0	18	16
	T6	0.025–0.049	42.0	35.0	10	8
		0.050–0.200	42.0	35.0	12	10

NOTES:
(1) To determine conformance to this specification, each value for ultimate strength and for yield strength shall be rounded to the nearest 0.1 ksi and each value for elongation to the nearest 0.5%, both in accordance with the rounding-off method of Practice E 29.
(2) The basis for establishment of mechanical property limits is shown in Annex A1.
(3) Elongation of full-section and cut-out sheet-type specimens is measured in 2 in., of cut-out round specimens, in 4 × specimen diameter.

E 215. Each tube shall be subjected to an eddy current test in accordance with the procedures described in Practice E 215. Reference standards described in Sections A1 and A2 shall be used to standardize the equipment. These same reference standards or secondary standards having equivalent eddy current response shall also serve to define acceptance-rejection limits. Tubes that produce eddy current indications less than those from the 2*A* holes of the applicable reference standard or an equivalent secondary standard shall be acceptable. Any tube having a discontinuity that produces an eddy current indication equal to or greater than those from the 2*A* holes of the applicable reference standard or an equivalent secondary standard shall be rejected.

11. Expansion Test

11.1 The tube ends shall be capable of being flared, without showing cracks or ruptures visible to the unaided eye when corrected for normal vision, by forcing a steel pin having a taper of 1.5 in./ft into the tube until the inside diameter has been increased 20%.

12. Cladding

12.1 The aluminum alloy cladding of Alclad 3003 tube shall, as specified, comprise either the inside surface (only), and its thickness shall be approximately 10% of the total wall thickness, or the outside surface (only), in which case its thickness shall be approximately 7% of the total wall thickness.

12.2 When the thickness of the cladding is to be determined on finished tube, transverse cross sections of at least three tubes from the lot shall be polished for examination with a metallurgical microscope. Using a magnification of 100×, the cladding thickness at four points, 90 deg. apart, in each sample shall be measured and the average of all measurements shall be taken as

TABLE 3
TABLES OF ANSI H35.2

Table No.	Title
14.1	Wall Thickness
14.2	Length
14.3	Outside Diameter, Heat-Treatable Tube
14.4	Outside Diameter, Non-Heat-Treatable Tube
14.5	Straightness
14.6	Squareness of Cut Ends

the thickness. In the case of tubes having a diameter larger than can properly be mounted for polishing and examination, the portions of the cross section polished for examination may consist of an arc about ½ in. in length.

13. Dimensional Tolerances

13.1 Variations from the specified wall thickness, length, outside diameter, straightness, and squareness of cut ends shall not exceed the tolerances specified in the tables of ANSI H35.2 (see Table 3).

13.2 *Sampling for Inspection* — Examination for dimensional conformance shall be made to ensure conformance to the tolerance specified.

14. General Quality

14.1 Unless otherwise specified, the material shall be supplied in the mill finish and shall be uniform as defined by the requirements of this specification and shall be commercially sound. Any requirement not so covered is subject to negotiation between producer and purchaser.

14.2 Grinding to remove minor surface imperfections shall not be cause for rejection, provided the repaired area is within dimensional tolerances.

14.3 When so specified on the purchase order, the cut ends of each shall be deburred by the use of a wire wheel, file, or other suitable tool or device.

14.4 Each tube shall be examined to determine conformance to this specification with respect to general quality and identification marking. On approval of the purchaser, however, the producer may use a system of statistical quality control for such examinations.

15. Source Inspection

15.1 If the purchaser desires that his representative inspect or witness the inspection and testing of the material prior to shipment, such agreement shall be made by the purchaser and producer as part of the purchase contract.

15.2 When such inspection or witness of inspection and testing is agreed upon, the producer shall afford the purchaser's representative all reasonable facilities to satisfy him that the material meets the requirements of this specification. Inspection and tests shall be conducted so there is no unnecessary interference with the producer's operations.

16. Retest and Rejection

16.1 If any material fails to conform to all of the applicable requirements of this specification, it shall be cause for rejection of the inspection lot.

16.2 When there is evidence that a failed specimen was not representative of the inspection lot and when no other sampling plan is provided or approved by the purchaser through the contract or purchase order, at least two additional specimens shall be selected to replace each test specimen that failed. All specimens so selected for retest shall meet the requirements of the specification or the lot shall be subject to rejection.

16.3 Material in which defects are discovered subsequent to inspection may be rejected.

16.4 If material is rejected by the purchaser, the producer or supplier is responsible only for replacement of the material to the purchaser. As much as possible of the rejected material shall be returned to the producer or supplier by the purchaser.

17. Certification

17.1 The producer or supplier shall furnish to the purchaser a certificate stating that each lot has been sampled, tested, and inspected in accordance with this specification, and has met the requirements.

18. Identification Marking of Product

18.1 When specified in the contract or purchase order, all material shall be marked in accordance with Practice B 666.

18.2 The foregoing requirements are minimum; marking systems which involve added information, large characteristics, and greater frequencies are acceptable under this specification.

19. Packaging and Package Marking

19.1 The material shall be packaged to provide adequate protection during normal handling and transportation, and each package shall contain only one alloy,

temper, and size of material unless otherwise agreed. The type of packaging and gross weight of containers shall, unless otherwise agreed upon, be at the producer's or supplier's discretion, provided that they are such as to ensure acceptance by common or other carriers for safe transportation at the lowest rate to the delivery point.

19.2 Each shipping container shall be marked with the purchase order number, material size, specification number, alloy and temper, gross and net weights, and the producer's name or trademark.

19.3 When specified in the contract or purchase order, material shall be preserved, packaged, and packed in accordance with the requirements of Practices B 660. The applicable levels shall be as specified in the contract or order. Marking for shipment of such material shall be in accordance with Fed. Std. No. 123 for civil agencies and MIL-STD-129 for Military agencies.

20. Keywords

20.1 aluminum alloy; drawn seamless tubes; heat exchangers

ANNEXES

(Mandatory Information)

A1. BASIS FOR INCLUSION OF PROPERTY LIMITS

A1.1 Limits are established at a level at which a statistical evaluation of the data indicates that 99% of the population obtained from all standard material meets the limit with 95% confidence. For the products described, mechanical property limits for the respective size ranges are based on the analyses of at least 100 data from standard production material with no more than ten data from a given lot. All tests are performed in accordance with the appropriate ASTM test methods. For informational purposes, refer to "Statistical Aspects of Mechanical Property Assurance" in the Related Material section of the *Annual Book of ASTM Standards,* Vol 02.02.

A2. ACCEPTANCE CRITERIA FOR INCLUSION OF NEW ALUMINUM AND ALUMINUM ALLOYS IN THIS SPECIFICATION

A2.1 Prior to acceptance for inclusion in this specification, the composition of wrought or cast aluminum or aluminum alloy shall be registered in accordance with ANSI H35.1. The Aluminum Association holds the Secretariat of ANSI H35 Committee and administers the criteria and procedures for registration.

A2.2 If it is documented that the Aluminum Association could not or would not register a given composition, an alternative procedure and the criteria for acceptance shall be as follows.

A2.2.1 The designation submitted for inclusion does not utilize the same designation system as described in ANSI H35.1. A designation not in conflict with other designation systems or a trade name is acceptable.

A2.2.2 The aluminum or aluminum alloy has been offered for sale in commercial quantities within the prior twelve months to at least three identifiable users.

A2.2.3 The complete chemical composition limits are submitted.

A2.2.4 The composition is, in the judgment of the responsible subcommittee, significantly different from that of any other aluminum or aluminum alloy already in the specification.

A2.2.5 For codification purposes, an alloying element is any element intentionally added for any purpose other than grain refinement and for which minimum and maximum limits are specified. Unalloyed aluminum contains a minimum of 99.00% aluminum.

A2.2.6 Standard limits for alloying elements and impurities are expressed to the following decimal places:

Less than 0.001%	0.000X
0.001 to but less than 0.01%	0.00X
0.01 to but less than 0.10%	
Unalloyed aluminum made by a refining process	0.0XX
Alloys and unalloyed aluminum not made by a refining process	0.0X
0.10 through 0.55%	0.XX
(It is customary to express limits of 0.30 through 0.55% as 0.X0 or 0.X5.)	
Over 0.55%	0.X, X.X, etc.
(except that combined Si+Fe limits for 99.00% minimum aluminum must be expressed as 0.XX or 1.XX)	

A2.2.7 Standard limits for alloying elements and impurities are expressed in the following sequence: Silicon; Iron; Copper; Manganese; Magnesium; Chromium; Nickel; Zinc (Note A2.1); Titanium; Other Elements, Each; Other Elements, Total; Aluminum (Note A2.2).

NOTE A2.1 — Additional specified elements having limits are inserted in alphabetical order of their chemical symbols between zinc and titanium, or are specified in footnotes.

NOTE A2.2 — Aluminum is specified as *minimum* for unalloyed aluminum and as a *remainder* for aluminum alloys.

APPENDIX

(Nonmandatory Information)

X1. GENERAL INFORMATION

X1.1 The following information does not constitute a part of this specification but is intended to assist in the proper selection and use of the materials.

X1.2 Alloys 1060, 3003, alclad 3003, 5052, and 5454 are supplied in a strain-hardened temper to meet the specified tensile and yield strengths. Alloy 6061 is supplied in the heat-treated temper (-T4) and in the heat-treated and aged temper (-T6); the -T4 temper is more workable, and after forming work is completed may be aged to the stronger -T6 temper. A typical aging treatment would be to hold the material at 340°F for 6 to 10 h in a suitable furnace and allow to cool at room temperature.

X1.3 Aluminum heat-exchanger tubes are resistant to most petroleum products and a large number of organic and inorganic chemicals. Aluminum is very resistant to hydrogen sulfide and carbon dioxide. Alloy alclad 3003 tubes are generally recommended in those heat-exchanger services where salt or fresh cooling waters within a pH range of 5 to 8 pass through the tubes. Waters with a pH outside of this range may or may not be corrosive, depending on what compounds present in the water contribute to the acidity or alkalinity.

SPECIFICATION FOR ALUMINUM AND ALUMINUM-ALLOY SEAMLESS PIPE AND SEAMLESS EXTRUDED TUBE

SB-241/SB-241M

(Identical with ASTM Specification B 241/B 241M-99 except for editorial differences in Table 1 and para. 4.2.5. Certification has been made mandatory.)

1. Scope

1.1 This specification covers aluminum and aluminum-alloy seamless pipe in the alloys (Note 1) and tempers shown in Table 1 [Table 2] and extruded round seamless tube in the alloys and tempers shown in Table 3 [Table 4] intended for pressure applications. The standard sizes for seamless pipe are listed in Table 16.7 of ANSI H35.2 and H35.2M. Nonstandard alloys, tempers, and sizes of pipe are produced as seamless extruded tube.

NOTE 1 — Throughout this specification, use of the term *alloy*, in the general sense, includes aluminum as well as aluminum alloy.

NOTE 2 — For other seamless drawn tubes, see Specification B 210 or Specification B 483. For extruded tube see Specification B 221, and for structural pipe and tube see Specification B 429.

1.2 Alloy and temper designations are in accordance with ANSI H35.1 and H35.1M. The equivalent Unified Numbering System alloy designations are those of Table

TABLE 1
TENSILE PROPERTY LIMITS FOR PIPE, (INCH-POUND UNITS)[A,B]

Alloy	Temper (Product)	Pipe Size, in.	Tensile Strength, min., ksi	Yield Strength (0.2% Offset) min., ksi	Elongation in 2 in. or 4 × Diameter, min., %[C]
3003	H18	Under 1	27.0	24.0	4
	H112	1 and over	14.0	5.0	25
6061	T6 (Extruded)	Under 1	38.0	35.0	8
		1 and over	38.0	35.0	10[D]
	T6 (Drawn)	Under 1	42.0	35.0	8[E]
		1 and Over	38.0	35.0	10[F]
6063	T6	All	30.0	25.0	8
6351	T5	All	38.0	35.0	10[D]
	T6	All	42.0	37.0	10[G]

[A] The basis for establishment of tensile property limits is shown in Annex A1.

[B] For purposes of determining conformance with this specification, each value for tensile strength and yield strength shall be rounded to the nearest 0.1 ksi, and each value for elongation shall be rounded to the nearest 0.5%, both in accordance with the rounding-off method of Practice E 29.

[C] Elongation of full-section and cut-out sheet-type specimens is measured in 2 in.; of round specimens, in 4 x specimen diameter.

[D] For wall thicknesses less than 0.250 in., the minimum elongation is 8%.

[E] For wall thicknesses 0.050 through 0.259 in., the minimum elongation is 10%.

[F] For wall thicknesses 0.260 through 0.500 in., the minimum elongation is 12%.

[G] For wall thickness less than 0.125 in., the minimum elongation is 8%.

TABLE 2
TENSILE PROPERTY LIMITS FOR PIPE (SI UNITS)[A,B]

Alloy[C]	Temper[C] (Product)	Pipe Size, Designation	Tensile Strength, min., MPa	Yield Strength (0.2% Offset), min., MPa	Elongation,[C] min.,%	
					In 50 mm	In 5 × Diameter ($5.65\sqrt{A}$)
3003	H18	Under 1	185	165	4	...
	H112	1 and over	95	35	25	22
6061	T6 (Extruded)	Under 1	260	240	8	...
		1 and over	260	240	10[D]	9
	T6 (Drawn)	Under 1	290	240	8[E]	...
		1 and over	260	240	10[F]	9
6063	T6	All	205	170	8	7
6351	T5	All	260	240	10[D]	9
	T6	All	290	255	10[G]	9

[A] The basis for establishment of mechanical property limits is shown in Annex A1.

[B] For purposes of determining conformance with this specification, each value for ultimate strength and yield strength shall be rounded to the nearest 1 MPa, and each value for elongation shall be rounded to the nearest 0.5%, both in accordance with the rounding-off method of Practice E 29.

[C] Elongations in 50 mm apply for pipe tested in full-section and to sheet type specimens taken from pipes having a wall up to 12.50 mm thick. Elongations in $5D$ ($5.65\sqrt{A}$), where D and A are diameter and cross-sectional area of the specimens respectively, apply to round test specimens machined from wall thicknesses over 6.30 mm.

[D] For wall thicknesses up through 6.30 mm, the minimum elongation is 8%.

[E] For wall thicknesses over 1.25 through 6.60 mm, the minimum elongation is 10%.

[F] For wall thicknesses over 6.60 through 12.50 mm, the minimum elongation is 12%.

[G] For wall thicknesses up through 3.20 mm the minimum elongation is 8%.

5 preceded by A9, for example, A91100 for aluminum 1100 in accordance with Practice E 527.

1.3 For acceptance criteria for inclusion of new aluminum and aluminum alloys in this specification, see Annex A2.

1.4 The values stated in either inch-pound or SI units are to be regarded separately as standard. The SI units are shown either in brackets or in separate tables. The values stated in each system are not exact equivalents; therefore, each system must be used independently of the other. Combining values from the two systems will result in nonconformance with this specification.

2. Referenced Documents

2.1 The following documents of the issue in effect on date of material purchase form a part of this specification to the extent referenced herein:

2.2 *ASTM Standards:*

B 557 Test Methods of Tension Testing Wrought and Cast Aluminum- and Magnesium-Alloy Products

B 557M Test Methods of Tension Testing Wrought and Cast Aluminum- and Magnesium-Alloy Products [Metric]

B 594 Practice for Ultrasonic Inspection of Aluminum-Alloy Wrought Products for Aerospace Applications

B 597 Practice for Heat Treatment of Aluminum Alloys

B 647 Test Method for Indentation Hardness of Aluminum Alloys by Means of a Webster Hardness Gage

B 648 Test Method for Indentation Hardness of Aluminum Alloys by Means of a Barcol Impressor

B 660 Practices for Packaging/Packing of Aluminum and Magnesium Products

B 666/B 666M Practice for Identification Marking of Aluminum Products

B 807 Practice for Extrusion Press Solution Heat Treatment of Aluminum Alloys

E 18 Test Methods for Rockwell Hardness and Rockwell Superficial Hardness of Metallic Materials

E 29 Practice for Using Significant Digits in Test Data to Determine Conformance With Specifications

E 34 Test Methods for Chemical Analysis of Aluminum and Aluminum Base Alloys

E 55 Practice for Sampling Wrought Nonferrous Metals and Alloys for Determination of Chemical Composition

E 101 Test Method for Spectrographic Analysis of Aluminum and Aluminum Alloys by the Point-to-Plane Technique

E 227 Test Method for Optical Emission Spectrometric Analysis of Aluminum and Aluminum Alloys by the Point-to-Plane Technique

E 527 Practice for Numbering Metals and Alloys (UNS)

TABLE 3
TENSILE PROPERTY LIMITS FOR EXTRUDED TUBE, INCH-POUND UNITS[A, B]

Temper	Specified Section or Wall Thickness, in.	Area, in.^{2}	Tensile Strength, ksi		Yield Strength (0.2% Offset), ksi		Elongation in 2 in. or 4 × Diameter, Min.,%[C]
			Min.	Max	Min.	Max	
Aluminum 1060							
O	All	All	8.5	14.0	2.5	...	25
H112	All	All	8.5	...	2.5	...	25
F[D]	All	All	...	...	...	...	...
Aluminum 1100							
O	All	All	11.0	15.5	3.0	...	25
H112	All	All	11.0	...	3.0	...	25
F[D]	All	All	...	...	...	...	...
Alloy 2014							
O	All	All	...	30.0	...	18.0	12
T4 T4510[E] T4511[E]	All	All	50.0	...	35.0	...	12
T42	All	All	50.0	...	29.0	...	12
T6 T6510[E] T6511[E]	Up through 0.499	All	60.0	...	53.0	...	7
	0.500–0.749	All	64.0	...	58.0	...	7
	0.750 and over	Up through 25	68.0	...	60.0	...	7
		Over 25 through 32	68.0	...	58.0	...	6
T62	Up through 0.749	All	60.0	...	53.0	...	7
	0.750 and over	Up through 25	60.0	...	53.0	...	7
		Over 25 through 32	60.0	...	53.0	...	6
F[D]	All	All	...	...	...	...	...
Alloy 2024							
O	All	All	...	35.0	...	19.0	12
T3	Up through 0.249	All	57.0	...	42.0	...	10
T3510[E]	0.250–0.749	All	60.0	...	44.0	...	10
T3511[E]	0.750–1.499	All	65.0	...	46.0	...	10
	1.500 and over	Up through 25	70.0	...	48.0	...	10
		Over 25 through 32	68.0	...	46.0	...	8
T42	Up through 0.749	All	57.0	...	38.0	...	12
	0.750–1.499	All	57.0	...	38.0	...	10
	1.500 and over	Up through 25	57.0	...	38.0	...	10
		Over 25 through 32	57.0	...	38.0	...	8
T81 T8510[E] T8511[E]	0.050–0.249	All	64.0	...	56.0	...	4
	0.250–1.499	All	66.0	...	58.0	...	5
	1.500 and over	Up through 32	66.0	...	58.0	...	5
F[D]	All	All	...	...	...	...	...

(continued)

TABLE 3
TENSILE PROPERTY LIMITS FOR EXTRUDED TUBE, INCH-POUND UNITS[A, B] (CONT'D)

Temper	Specified Section or Wall Thickness, in.	Area, in.^{2}	Tensile Strength, ksi		Yield Strength (0.2% Offset), ksi		Elongation in 2 in. or 4 × Diameter, Min.,%[C]
			Min.	Max	Min.	Max	
Alloy 2219							
O	All	All	...	32.0	...	18.0	12
T31, T3510[E], T3511[E]	Up through 0.499	Up through 25	42.0	...	26.0	...	14
	0.500–2.999	Up through 25	45.0	...	27.0	...	14
T62	Up through 0.999	Up through 25	54.0	...	36.0	...	6
	1,000 and over	Up through 25	54.0	...	36.0	...	6
T81, T8510[E], T8511[E]	Up through 2.999	Up through 25	58.0	...	42.0	...	6
F[D]	All	All	...	...	...	...	...
Alloy 3003							
O	All	All	14.0	19.0	5.0	...	25
H112	All	All	14.0	...	5.0	...	25
F[D]	All	All	...	...	...	...	...
Alclad Alloy 3003							
O	All	All	13.0	18.0	4.5	...	25
H112	All	All	13.0	...	4.5	...	25
F[D]	All	All	...	...	...	...	...
Alloy 5052							
O	All	All	25.0	35.0	10.0	...	...
F[D]	All	All	...	...	...	...	...
Alloy 5083							
O	All	Up through 32	39.0	51.0	16.0	...	14
H111	All	Up through 32	40.0	...	24.0	...	12
H112	All	Up through 32	39.0	...	16.0	...	12
F[D]	All	All	...	...	...	...	...
Alloy 5086							
O	All	Up through 32	35.0	46.0	14.0	...	14
H111	All	Up through 32	36.0	...	21.0	...	12
H112	All	Up through 32	35.0	...	14.0	...	12
F[D]	All	All	...	...	...	...	...
Alloy 5454							
O	All	Up through 32	31.0	41.0	12.0	...	14
H111	All	Up through 32	33.0	...	19.0	...	12
H112	All	Up through 32	31.0	...	12.0	...	12
F[D]	All	All	...	...	...	...	...

(continued)

TABLE 3
TENSILE PROPERTY LIMITS FOR EXTRUDED TUBE, INCH-POUND UNITS[A, B] (CONT'D)

Temper	Specified Section or Wall Thickness, in.	Area, in.^{2}	Tensile Strength, ksi		Yield Strength (0.2% Offset), ksi		Elongation in 2 in. or 4 × Diameter, Min.,%[C]
			Min.	Max	Min.	Max	
Alloy 5456							
O	All	Up through 32	41.0	53.0	19.0	...	14
H111	All	Up through 32	42.0	...	26.0	...	12
H112	All	Up through 32	41.0	...	19.0	...	12
F[D]	All	All	...	...	...	...	...
Alloy 6061							
O	All	All	...	22.0	...	16.0	16
T1	Up through 0.625	All	26.0	...	14.0	...	16
T4	All	All	26.0	...	16.0	...	16
T4510[E]	All	All	26.0	...	16.0	...	16
T4511[E]	All	All	26.0	...	16.0	...	16
T42	All	All	26.0	...	12.0	...	16
T51	Up through 0.625	All	35.0	...	30.0	...	8
T6, T62, T6510[E], T6511[E]	Up through 0.249	All	38.0	...	35.0	...	8
	0.250 and over	All	38.0	...	35.0	...	10
F[D]	All	All	...	...	...	...	...
Alloy 6063							
O	All	All	...	19.0	...	...	18
T1[F]	Up through 0.500	All	17.0	...	9.0	...	12
	0.501–1.000	All	16.0	...	8.0	...	12
T4, T42	Up through 0.500	All	19.0	...	10.0	...	14
	0.501–1.000	All	18.0	...	9.0	...	14
T5	Up through 0.500	All	22.0	...	16.0	...	8
	0.501–1.000	All	21.0	...	15.0	...	8
T52	Up through 1.000	All	22.0	30.0	16.0	25.0	8
T6, T62	Up through 0.124	All	30.0	...	25.0	...	8
	0.125–1.000	All	30.0	...	25.0	...	10
F[D]	All	All	...	...	...	...	...
Alloy 6066							
O	All	All	...	29.0	...	18.0	16
T4, T4510,[E] T4511[E]	All	All	40.0	...	25.0	...	14
T42	All	All	40.0	...	24.0	...	14
T6, T6510,[E] T6511[E]	All	All	50.0	...	45.0	...	8
T62	All	All	50.0	...	42.0	...	8

(continued)

TABLE 3
TENSILE PROPERTY LIMITS FOR EXTRUDED TUBE, INCH-POUND UNITS[A, B] (CONT'D)

Temper	Specified Section or Wall Thickness, in.	Area, in.^{2}	Tensile Strength, ksi		Yield Strength (0.2% Offset), ksi		Elongation in 2 in. or 4 × Diameter, Min.,%[C]
			Min.	Max	Min.	Max	
		Alloy 6162					
T5 T5510,[E] T5511[E]	Up through 1.000	All	37.0	...	34.0	...	7
T6 T6510,[E]	Up through 0.249	All	38.0	...	35.0	...	8
T6511[E]	0.250–0.499	All	38.0	...	35.0	...	10
		Alloy 6351					
T4	Up through 0.749	All	32.0	...	19.0	...	16
T6	Up through 0.124	...	42.0	...	37.0	...	8
	0.125–0.749	...	42.0	...	37.0	...	10
		Alloy 7075					
O	All	...	...	40.0	...	24.0	10
T6, T62	Up through 0.249	All	78.0	...	70.0	...	7
T6510[E]	0.250–0.499	All	81.0	...	73.0	...	7
T6511[E]	0.500–1.499	All	81.0	...	72.0	...	7
	1.500–2.999	All	81.0	...	72.0	...	7
T73	0.062–0.249	All	68.0	...	58.0	...	7
T73510	0.250–1.499	Up through 25	70.0	...	61.0	...	8
T73511	1.500–2.999	Up through 25	69.0	...	59.0	...	8
F[D]	All	All	...	...	...	...	...
		Alloy 7178					
O	All	Up through 32	...	40.0	...	24.0	10
	Up through 0.061	All	82.0	...	76.0	...	5
	0.062–0.249	Up through 20	84.0	...	76.0	...	5
T6	0.250–1.499	Up through 25	87.0	...	78.0	...	5
T6510[E]	1.500–2.499	Up through 25	86.0	...	77.0	...	5
T6511[E]		Over 25 through 32	84.0	...	75.0	...	5
	2.500–2.999	Up through 32	82.0	...	71.0	...	5
T62	Up through 0.061	All	79.0	...	73.0	...	5
	0.062–0.249	Up through 20	82.0	...	74.0	...	5
	0.250–1.499	Up through 25	86.0	...	77.0	...	5
	1.500–2.499	Up through 25	86.0	...	77.0	...	5
		Over 25 through 32	84.0	...	75.0	...	5
	2.500–2.999	Up through 32	82.0	...	71.0	...	5
F[D]	All	All	...	...	...	...	...

(continued)

TABLE 3 (CONT'D)

[A] The basis for establishment of mechanical property limits is shown in Annex A1.

[B] To determine conformance to this specification, each value for ultimate strength and for yield strength shall be rounded to the nearest 0.1 ksi and each value for elongation to the nearest 0.5%, both in accordance with the rounding-off method of Practice E 29.

[C] Elongation of full-section and cut-out sheet-type specimens is measured in 2 in.; of round specimens, in 4 × specimen diameter. See 9.1.1 for conditions under which measurements are not required.

[D] Tests for tensile properies in the F temper are not required.

[E] For stress-relieved tempers (T3510, T3511, T4510, T4511, T5510, T5511, T6510, T6511, T73510, T73511, T8510, T8511), characteristics and properties other than those specified may differ somewhat from the corresponding characteristics and properties of material in the basic tempers.

[F] Formerly designated T42 temper. When properly aged (precipitation heat-treated), 6063-T1 extruded products are designated T5.

E 607 Test Method for Optical Emission Spectrometric Analysis of Aluminum and Aluminum Alloys by the Point-to-Plane Technique, Nitrogen Atmosphere
E 716 Practices for Sampling Aluminum and Aluminum Alloys for Spectrochemical Analysis
E 1004 Test Method for Electromagnetic (Eddy-Current) Measurements of Electrical Conductivity
E 1251 Test Method for Optical Emission Spectrometric Analysis of Aluminum and Aluminum Alloys by the Argon Atmosphere, Point-to-Plane, Unipolar Self-Initiating Capacitor Discharge
G 47 Test Method for Determining Susceptibility to Stress-Corrosion Cracking of High-Strength Aluminum Alloy Products

2.3 *ANSI Standards:*

H35.1 Alloy and Temper Designation Systems for Aluminum
H35.1(M) Alloy and Temper Designation Systems for Aluminum
H35.2 Dimensional Tolerances for Aluminum Mill Products
H35.2(M) Dimensional Tolerances for Aluminum Mill Products

2.4 *Federal Standard:*

Fed. Std. No. 123 Marking for Shipment (Civil Agencies)

2.5 *Military Standard:*

MIL-STD-129 Marking for Shipment and Storage

2.6 *Military Specification:*

MIL-H-6088 Heat Treatment of Aluminum Alloys

3. Terminology

3.1 *Definitions:*

3.1.1 *alclad seamless pipe or alclad seamless tube* — a composite pipe or tube product composed of a seamless aluminum alloy core having on either the inside or the outside surface a metallurgically bonded aluminum or aluminum-alloy coating that is anodic to the core, thus electrolytically protecting the core against corrosion.

3.1.2 *extruded seamless round tube* — an extruded hollow product having a round cross section and a uniform wall thickness, which does not contain any line junctures resulting from method of manufacture.

3.1.3 *producer* — the primary manufacturer of the material.

3.1.4 *seamless pipe* — extruded or drawn seamless tube having certain standardized sizes of outside diameter and wall thickness commonly designated by "Nominal Pipe Sizes" and American National Standards Institute (ANSI) Schedule Numbers.

3.1.5 *supplier* — jobber or distributor as distinct from producer.

3.2 *Definition of Term Specific to This Standard:*

3.2.1 *capable of*— the test need not be performed by the producer of the material. However, should subsequent testing by the purchaser establish that the material does not meet these requirements, the material shall be subject to rejection.

4. Ordering Information

4.1 Orders for material to this specification shall include the following information:

4.1.1 This specification designation (which includes the number, the year, and the revision letter, if applicable),

NOTE 3 — For inch-pound orders specify B 241; for metric orders specify B 241M. Do not mix units.

4.1.2 Quantity in pieces or pounds [kilograms],

4.1.3 Alloy (Section 7),

4.1.4 Temper (Section 9),

4.1.5 Pipe size and schedule number (Table 16.7 of ANSI H35.2 and H35.2M), or outside diameter and wall thickness (extruded tube), and

4.1.6 Length.

4.2 Additionally, orders for material to this specification shall include the following information when required by the purchaser:

TABLE 4
TENSILE PROPERTY LIMITS FOR EXTRUDED TUBE, SI UNITS[A, B]

Temper	Specified Wall Thickness, mm		Area, mm^2		Tensile Strength, MPa		Yield Strength (0.2% Offset), MPa		Elongation,[C] %, Min.	
	Over	Through	Over	Through	Min.	Max	Min.	Max	In 50 mm	In 5 × Diameter ($5.65\sqrt{A}$)
Aluminum 1060										
O	All		All		60	95	15	...	25	22
H112	All		All		60	...	15	...	25	22
F[D]	All		All		...	...	...	...	...	...
Aluminum 1100										
O	All		All		75	105	20	...	25	22
H112	All		All		75	...	20	...	25	22
F[D]	All		All		...	...	...	...	...	...
Alloy 2014										
O	All		All		...	205	...	125	12	10
T4, T4510[E], T4511[E]	All		All		345	...	240	...	12	10
T42[F]	All		All		345	...	200	...	12	10
T6, T6510[E], T6511[E]	...	12.50	All		415	...	365	...	7	6
	12.50	18.00	All		440	...	400	...	...	6
	18.00	...	...	16 000	470	...	415	...	...	6
	18.00	...	16 000	20 000	470	...	400	...	...	5
T62[F]	...	18.00	All	...	415	...	365	...	7	6
	18.00	...	...	16 000	415	...	365	...	...	6
	18.00	...	16 000	20 000	415	...	365	...	...	5
F[D]	All		All	...	...	...	...	...	...	...
Alloy 2024										
O	All		All		...	240	...	130	12	10
T3, T3510[E], T3511[E]	...	6.30	All		395	...	290	...	10[H]	...
	6.30	18.00	All		415	...	305	...	10[H]	9[H]
	18.00	35.00	All		450	...	315	...	...	9
	35.00	...	...	16 000	485	...	360[I]	...	...	9
	35.00	...	16 000	20 000	470	...	330[J]	...	...	7
T42[F]	...	18.00	All	...	395	...	260	...	12	10
	18.00	35.00	All		395	...	260	...	...	9
	35.00	...	...	16 000	395	...	260	...	...	9
	35.00	...	16 000	20 000	395	...	260	...	...	...
T81, T8510[E], T8511[E]	1.20	6.30	All		440	...	385	...	4	7
	6.30	35.00	All		455	...	400	...	5	4
	35.00	...	...	20 000	455	...	400	...	...	4
F[D]	All		All		...	...	...	...	...	...

(continued)

TABLE 4
TENSILE PROPERTY LIMITS FOR EXTRUDED TUBE, SI UNITS[A, B] (CONT'D)

Temper	Specified Wall Thickness, mm		Area, mm^2		Tensile Strength, MPa		Yield Strength (0.2% Offset), MPa		Elongation,[C] %, Min.	
	Over	Through	Over	Through	Min.	Max	Min.	Max	In 50 mm	In 5 × Diameter ($5.65\sqrt{A}$)
Alloy 2219										
O	All		All		...	220	...	125	12	10
T31, T3510[E], T3511[E]	...	12.50	...	16 000	290	...	180	...	14	12
	12.50	80.00	...	16 000	310	...	185	...	...	12
T62[F]	...	25.00	...	16 000	370	...	250	...	6	5
	25.00	...	...	20 000	370	...	250	...	...	5
T81, T8510[E], T8511[E]	...	80.00	...	16 000	400	...	290	...	6	5
F[D]	All		All		...	...	...	...	...	...
Alloy 3003										
O	All	...	All		95	130	35	...	25	22
H112	...	1.60	All		95	...	35	...	...	...
	1.60	...	All		95	...	35	...	25	22
F[D]	All		All		...	...	...	...	...	...
Alclad Alloy 3003										
O	All		All		90	125	30	...	25	22
H112	All		All		90	...	30	...	25	22
F[D]	All		All		...	...	...	...	...	...
Alloy 5052										
O	All		All		170	240	70	...	...	...
F[D]	All		All		...	...	...	...	...	...
Alloy 5083										
O	All		...	20 000	270	350	110	...	14	12
H111	All		...	20 000	275	...	165	...	12	10
H112	All		...	20 000	270	...	110	...	12	10
F[D]	All		All	...	...	...	...	...	...	...
Alloy 5086										
O	All		...	20 000	240	315	95	...	14	12
H111	All		...	20 000	250	...	145	...	12	10
H112	All		...	20 000	240	...	95	...	12	10
F[D]	All		All	...	...	...	...	...	...	...

(continued)

TABLE 4
TENSILE PROPERTY LIMITS FOR EXTRUDED TUBE, SI UNITS[A, B] (CONT'D)

Temper	Specified Wall Thickness, mm		Area, mm^2		Tensile Strength, MPa		Yield Strength (0.2% Offset), MPa		Elongation,[C] %, Min.	
	Over	Through	Over	Through	Min.	Max	Min.	Max	In 50 mm	In 5 × Diameter ($5.65\sqrt{A}$)
Alloy 5454										
O	All		...	20 000	215	285	85	...	14	12
H111	All		...	20 000	230	...	130	...	12	10
H112	All		...	20 000	215	...	85	...	12	10
F[D]	All		All	...	...	...	...	...	...	...
Alloy 5456										
O	All		...	20 000	285	365	130	...	14	12
H111	All		...	20 000	290	...	180	...	12	10
H112	All		...	20 000	285	...	130	...	12	10
F[D]	All		All	...	...	...	...	...	...	...
Alloy 6061										
O	All		All		...	150	...	110	16	14
T1	...	16.00	All		180	...	95	...	16	14
T4, T4510[E], T4511[E]	All		All		180	...	110	...	16	14
T42[F]	All		All		180	...	85	...	16	14
T51	...	16.00	All		240	...	205	...	8	7
T6, T62[F], T6510[E], T6511[E]	...	6.30	All		260	...	240	...	8	...
	6.30	...	All		260	...	240	...	10	9
F[D]	All		All		...	...	...	...	...	...
Alloy 6063										
O	All		All		...	130	...	...	18	16
T1	...	12.50	All		115	...	60	...	12	10
	12.50	25.00	All		110	...	55	...	...	10
T4, T42[F]	...	12.50	All		130	...	70	...	14	12
	12.50	25.00	All		125	...	60	...	...	12
T5	...	12.50	All		150	...	110	...	8	7
	12.50	25.00	All		145	...	105	...	...	7
T52	...	25.00	All		150	205	110	170	8	7
T6	...	3.20	All		205	...	170	...	8	...
	3.20	25.00	All		205	...	170	...	10	9
F[D]	All		All		...	...	...	...	...	...

(continued)

TABLE 4
TENSILE PROPERTY LIMITS FOR EXTRUDED TUBE, SI UNITS[A, B] (CONT'D)

Temper	Specified Wall Thickness, mm		Area, mm^2		Tensile Strength, MPa		Yield Strength (0.2% Offset), MPa		Elongation,[C] %, Min.	
	Over	Through	Over	Through	Min.	Max	Min.	Max	In 50 mm	In 5 × Diameter (5.65 $\sqrt{A}$)
Alloy 6066										
O	All		All		...	200	...	125	16	14
T4 T4510[E] T4511[E]	All		All		275	...	170	...	14	12
T42	All		All		275	...	165	...	14	12
T6 T6510[E] T6511[E]	All		All		345	...	310	...	8	7
T62	All		All		345	...	290	...	8	7
Alloy 6162										
T5, T5510[E] T5511[E]	...	25.00	All		255	...	235	...	7	6
T6 T6510[E]	...	6.30	All		260	...	240	...	8	...
T6511[E]	6.30	12.50	All		260	...	240	...	10	9
Alloy 6351										
T4	...	19.00	All		220	...	130	...	16	14
T6	...	3.20	...	...	290	...	255	...	8	
	3.20	25.00	...	...	290	...	255	...	10	9
Alloy 7075										
O	All		All		...	275	...	165	10	9
T6, T62[F]	...	6.30	All		540	...	485	...	7	...
T6510[E]	6.30	12.50	All		560	...	505	...	7	6
T6511[E]	12.50	70.00	All		560	...	495	...	...	6
T73	1.60	6.30	...	13 000	470	...	400	...	7	...
T73510[E]	6.30	35.00	...	16 000	485	...	420	...	8	7
T73511[E]	35.00	70.00	...	18 000	475	...	405	...	...	7
F[D]	All		All		...	...	...	...	...	...

(continued)

TABLE 4
TENSILE PROPERTY LIMITS FOR EXTRUDED TUBE, SI UNITS[A, B] (CONT'D)

Temper	Specified Wall Thickness, mm		Area, mm^2		Tensile Strength, MPa		Yield Strength (0.2% Offset), MPa		Elongation,[C] %, Min.	
	Over	Through	Over	Through	Min.	Max	Min.	Max	In 50 mm	In 5 × Diameter ($5.65\sqrt{A}$)
Alloy 7178										
O	All		...	20 000	...	275	...	165	10	9
T6, T6510[E], T6511[E]	...	1.60	All		565	...	525	...	...	...
	1.60	6.30	...	13 000	580	...	525	...	5	...
	6.30	35.00	...	16 000	600	...	540	...	5	4
	35.00	60.00	...	16 000	595	...	530	...	...	4
	35.00	60.00	16 000	20 000	580	...	515	...	...	4
	60.00	80.00	...	20 000	565	...	490	...	...	4
T62[F]	...	1.60	All		545	...	505	...	...	...
	1.60	6.30	...	13 000	565	...	510	...	5	...
	6.30	35.00	...	16 000	595	...	530	...	5	4
	35.00	60.00	...	16 000	595	...	530	...	...	4
	35.00	60.00	16 000	20 000	580	...	515	...	...	4
	60.00	80.00	...	20 000	565	...	490	...	...	4
F[D]	All	All	...	...	...	...	...	...	...	...

[A] The basis for establishment of tensile property limits is shown in Annex A1.

[B] To determine conformance to this specification, each value for tensile strength and yield strength shall be rounded to the nearest 1 MPa and each value for elongation to the nearest 0.5%, both in accordance with the rounding-off method of Practice E 29.

[C] Elongations in 50 mm apply for shapes tested in full section and for sheet-type specimens machined from material up through 12.5 mm in thickness having parallel surfaces. Elongations in $5D$ ($5.65\sqrt{A}$), where D and A are diameter and cross-sectional area of the specimen, respectively, apply to round test specimens machined from thicknesses over 6.30. See 9.1.1 for conditions under which measurements are not required.

[D] No mechanical properties are specified or guaranteed.

[E] For stress-relieved tempers (T3510, T3511, T4510, T4511, T5510, T5511, T6510, T6511, T73510, T73511, T76510, T76511, T8510, and T8511), characteristics and properties other than those specified may differ somewhat from the corresponding characteristics and properties of material in the basic tempers.

[F] Material in the T42 and T62 tempers is not available from the material producers.

4.2.1 Whether solution treatment at the press is unacceptable (8.2),

4.2.2 Whether heat treatment in accordance with Practice B 597 is required (8.3),

4.2.3 Whether pipe size under 1 shall be extruded only (5.1 and Table 1 or [Table 2], Footnote F);

4.2.4 Whether threaded ends are required (see 15.2),

4.2.5 Whether inspection or witness of inspection and tests by the purchaser's representative is required prior to material shipment (Section 17),

4.2.6 Whether marking for identification is required (Section 19), and whether marking of lot number for alloys 2014 and 2024 in the T3- and T4-type tempers and alloy 6061 in the T6-type tempers is required (19.2),

4.2.7 Whether Practices B 660 applies and, if so, the levels of preservation, packaging, and packing required (19.3),

4.2.8 Certification of the material is required (Section 21),

4.2.9 Requirements for tensile property and dimensional tolerance for sizes not specifically covered (9.1.2 and 14.2), and

4.2.10 Whether ultrasonic inspection is required (Section 16, Table 6 [Table 7]).

5. Materials and Manufacture

5.1 The pipe and tube shall be produced from hollow extrusion ingot (cast in hollow form, or drilled, or pierced from solid ingot) and shall be extruded by use of the die

TABLE 5
CHEMICAL COMPOSITION LIMITS[A,B,C]

Alloy	Silicon	Iron	Copper	Manganese	Magnesium	Chromium	Zinc	Titanium	Other Elements[D] Each	Other Elements[D] Total[E]	Aluminum
1060	0.25	0.35	0.05	0.03	0.03	...	0.05	0.03	0.03[F]	...	99.60 min.[G]
1100	0.95 Si+Fe		0.05–0.20	0.05	...	...	0.10	...	0.05	0.15	99.00 min.[G]
2014	0.50–1.2	0.7	3.9–5.0	0.40–1.2	0.20–0.8	0.10	0.25	0.15[H]	0.05	0.15	Remainder
2024	0.50	0.50	3.8–4.9	0.30–0.9	1.2–1.8	0.10	0.25	0.15[H]	0.05	0.15	Remainder
2219	0.20	0.30	5.8–6.8	0.20–0.40	0.02	...	0.10	0.02–0.10	0.05[I]	0.15[I]	Remainder
3003	0.6	0.7	0.05–0.20	1.0–1.5	...	...	0.10	...	0.05	0.15	Remainder
Alclad 3003[J]	...	...	...	...	...	...	...	...	...	...	...
5052	0.25	0.40	0.10	0.10	2.2–2.8	0.15–0.35	0.10	...	0.05	0.15	Remainder
5083	0.40	0.40	0.10	0.40–1.0	4.0–4.9	0.05–0.25	0.25	0.15	0.05	0.15	Remainder
5086	0.40	0.50	0.10	0.20–0.7	3.5–4.5	0.05–0.25	0.25	0.15	0.05	0.15	Remainder
5454	0.25	0.40	0.10	0.50–1.0	2.4–3.0	0.05–0.20	0.25	0.20	0.05	0.15	Remainder
5456	0.25	0.40	0.10	0.50–1.0	4.7–5.5	0.05–0.20	0.25	0.20	0.05	0.15	Remainder
6061[K]	0.40–0.8	0.7	0.15–0.40	0.15	0.8–1.2	0.04–0.35	0.25	0.15	0.05	0.15	Remainder
6063	0.20–0.6	0.35	0.10	0.10	0.45–0.9	0.10	0.10	0.10	0.05	0.15	Remainder
6066	0.9–1.8	0.50	0.7–1.2	0.6–1.1	0.8–1.4	0.40	0.25	0.20	0.05	0.15	Remainder
6162	0.40–0.8	0.50	0.20	0.10	0.7–1.1	0.10	0.25	0.10	0.05	0.15	Remainder
6351	0.7–1.3	0.50	0.10	0.40–0.8	0.40–0.8	...	0.20	0.20	0.05	0.15	Remainder
7072[L]	0.7 Si+Fe		0.10	0.10	0.10	...	0.8–1.3	...	0.05	0.15	Remainder
7075	0.40	0.50	1.2–2.0	0.30	2.1–2.9	0.18–0.28	5.1–6.1	0.20[M]	0.05	0.15	Remainder
7178	0.40	0.50	1.6–2.4	0.30	2.4–3.1	0.18–0.28	6.3–7.3	0.20	0.05	0.15	Remainder

[A] Limits are in weight [mass] percent maximum unless shown as a range or stated otherwise.

[B] Analysis shall be made for the elements for which limits are shown in this table.

[C] For purposes of determining conformance to these limits, an observed value or a calculated value obtained from analysis shall be rounded to the nearest unit in the last right-hand place of figures used in expressing the specified limit, in accordance with the rounding-off method of Practice E 29.

[D] *Others* includes listed elements for which no specific limit is shown as well as unlisted metallic elements. The producer may analyze samples for trace elements not specified in the specification. However, such analysis is not required and may not cover all metallic *Others* elements. Should any analysis by the producer or the purchaser establish that an *Others* element exceeds the limit of *Each* or that the aggregate of several *Others* elements exceeds the limit of *Total*, the material shall be considered nonconforming.

[E] *Other Elements* — Total shall be the sum of unspecified metallic elements 0.010% or more, rounded to the second decimal before determining the sum.

[F] Vanadium 0.05% maximum.

[G] The aluminum content shall be calculated by subtracting from 100.00% the sum of all metallic elements present in amounts of 0.010% or more each, rounded to the second decimal before determining the sum.

[H] A maximum limit of 0.20% for zirconium + titanium is permitted upon agreement between the purchaser and producer.

[I] Vanadium 0.05–0.15%; zirconium, 0.10–0.25%. The total for other elements does not include vanadium and zirconium.

[J] Alloy 3003 clad with alloy 7072.

[K] Beginning in the 1965 issue, the requirements for alloy 6062 were combined with alloy 6061 by revision of the minimum chromium content of 6061 from 0.15 to 0.04. This action cancelled alloy 6062.

[L] Cladding on alclad 3003.

[M] A maximum limit of 0.25% for zirconium + titanium is permitted upon agreement between the purchaser and producer.

TABLE 6
ULTRASONIC DISCONTINUITY LIMITS[A] FOR SEAMLESS EXTRUDED TUBE, INCH-POUND UNITS

Alloy	Wall Thickness, in.	Max Weight per Piece, lb	Max Width: Thickness Ratio	Discontinuity Class[B]
2024	0.500 & over	600	10:1	B
7075	0.500–1.499	600	10:1	B
7178	1.500 & over	600	10:1	A

[A] Discontinuities in excess of those listed in this table shall be allowed, subject to the approval of the procuring activity, if it is established that they will be removed by machining or that they are in noncritical areas.

[B] The discontinuity class limits are defined in Section 11, Discontinuity Class Limits, of Practice B 594.

TABLE 7
ULTRASONIC DISCONTINUITY LIMITS[A] FOR SEAMLESS EXTRUDED TUBE, [SI UNITS]

Alloy	Wall Thickness, mm		Max Mass per Piece, kg	Max Width: Thickness Ratio	Discontinuity Class[B]
	Over	Through			
2024	12.50	...	300	10:1	B
7075	12.50	35.00	300	10:1	B
7178	35.00	...	300	10:1	A

[A] Discontinuities in excess of those listed in this table shall be allowed, subject to the approval of the procuring activity, if it is established that they will be removed by machining or that they are in noncritical areas.

[B] The discontinuity class limits are defined in Section 11, Discontinuity Class Limits, of Practice B 594.

and mandrel method. Pipe and tube may be subsequently cold drawn at the option of the producer.

6. Quality Assurance

6.1 *Responsibility for Inspection and Tests* — Unless otherwise specified in the contract or purchase order, the producer is responsible for the performance of all inspection and test requirements specified herein. The producer may use his own or any other suitable facilities for the performance of the inspection and test requirements specified herein, unless disapproved by the purchaser in the order or at the time of contract signing. The purchaser shall have the right to perform any of the inspections and tests set forth in this specification where such inspections and tests are deemed necessary to ensure that material conforms to prescribed requirements.

6.2 *Lot Definition* — An inspection lot shall be defined as follows:

6.2.1 For heat-treated tempers, an inspection lot shall consist of an identifiable quantity of material of the same mill form, alloy, temper, and nominal dimensions traceable to a heat-treat lot or lots, and subjected to inspection at one time.

6.2.2 For nonheat-treated tempers, an inspection lot shall consist of an identifiable quantity of material of the same mill form alloy, temper, and nominal dimensions subjected to inspection at one time.

7. Chemical Composition

7.1 *Limits* — The material shall conform to the chemical composition limits specified in Table 5. Conformance shall be determined by analyzing samples taken when the ingots are poured, or analyzing samples taken from the finished or semifinished product. If the producer has determined the chemical composition of the material during the course of manufacture, he shall not be required to sample and analyze the finished product.

NOTE 4 — It is standard practice in the United States aluminum industry to determine conformance to the chemical composition limits prior to further processing of ingots into wrought products. Due to the continuous nature of the process, it is not practical to keep a specific ingot analysis identified with a specific quantity of finished material.

7.2 *Number of Samples* — The number of samples taken for determination of chemical composition shall be as follows.

7.2.1 When samples are taken at the time the ingots are poured, at least one sample shall be taken for each group of ingots poured simultaneously from the same source of molten metal.

7.2.2 When samples are taken from the finished or semifinished product, a sample shall be taken to represent each 4000 lb [2000 kg], or fraction thereof, in the shipment, except that not more than one sample shall be required per piece.

7.3 *Methods of Sampling* — Samples for determination of chemical composition shall be taken in accordance with one of the following methods:

7.3.1 Samples for chemical analysis shall be taken from the material by drilling, sawing, milling, turning, or clipping a representative piece or pieces to obtain a sample of not less than 75 g. Sampling shall be in accordance with Practice E 55.

7.3.2 Sampling for spectrochemical analysis shall be in accordance with Practices E 716. Samples for other methods of analysis shall be suitable for the form of material being analyzed and the type of analytical method used.

NOTE 5 — It is difficult to obtain a reliable analysis of each of the components of clad materials using material in its finished state. A reasonably accurate determination of the core composition can be made if the cladding is substantially removed prior to analysis. The cladding composition is more difficult to determine because of the relatively thin layer and because of diffusion of core elements to the cladding. The correctness of cladding alloy used can usually be verified by a combination of metallographic examination and spectrochemical analysis of the surface at several widely separated points.

7.4 *Methods of Analysis* — The determination of chemical composition shall be made in accordance with suitable chemical (Test Methods E 34), or spectrochemical (Test Methods E 101, E 227, E 607, and E 1251) methods. Other methods may be used only when no published ASTM method is available. In case of dispute, the methods of analysis shall be agreed upon between the producer and the purchaser.

8. Heat Treatment

8.1 Producer or supplier heat treatment for the production of T1 and T5-type tempers shall be in accordance with Practice B 807, and for the production of T3, T4, T6, T7, and T8-type tempers, except as noted in 8.2 or unless otherwise specified in 8.3, in accordance with MIL-H-6088.

8.2 Alloys 6061, 6063, and 6351 may be solution heat-treated and quenched at the extrusion press in accordance with Practice B 807 for the production of T4 and T6-type tempers, as applicable.

8.3 When specified, heat treatment for the production of T3, T4, T6, T7, and T8-type tempers shall be in accordance with Practice B 597.

9. Tensile Properties

9.1 *Limits* — The material shall conform to the tensile property requirements specified in Table 1 [Table 2] and Table 3 [Table 4] as applicable.

9.1.1 The elongation requirements shall not be applicable to the following:

9.1.1.1 Material of such dimensions that a standard test specimen cannot be taken in accordance with Test Methods B 557 [B 557M].

9.1.1.2 Tubes less than 0.062 in. [up through 1.60 mm] in wall thickness.

9.1.2 Tensile property limits for sizes not covered in Table 3 and Table 4 shall be as agreed upon between the producer and purchaser and shall be so specified in the contract or purchase order.

9.2 *Number of Specimens:*

9.2.1 For material having a nominal weight of less than 1 lb/linear ft [up through 1.7 kg/linear m], one tension test specimen shall be taken for each 1000 lb [500 kg] or fraction thereof in the lot.

9.2.2 For material having a nominal weight of 1 lb or more/linear ft [over 1.7 kg/linear m], one tension test specimen shall be taken for each 1000 ft [300 m] or fraction thereof in the lot.

9.2.3 Other procedures for selecting samples may be employed if agreed upon by the producer and the purchaser.

9.3 *Test Methods* — The tension tests shall be made in accordance with Test Methods B 557 [B 557M].

10. Producer Conformation of Heat Treatment Response

10.1 The producer shall determine that heat treatable alloys supplied in the O or F tempers (within the size limits specified in Table 3 and [Table 4]) respond to heat treatment in accordance with the following:

10.1.1 Alloys 2014, 2024, 6061, and 6063 shall, after proper solution heat treatment and natural aging for not less than 4 days at room temperature, conform to the properties specified in Table 3 and [Table 4] for T42 temper material. The heat-treated samples may be tested prior to 4 days natural aging but if they fail to conform to the T42 temper properties, the tests may be repeated after completion of the 4 days natural aging without prejudice.

10.1.2 Alloys 2024, 2219, 6061, 6063, 7075, and 7178 shall, after proper solution heat treatment and precipitation heat treatment, conform to the properties specified in Table 3 and [Table 4] for T62 temper material.

10.2 *Number of Specimens*— The number of specimens from each lot of O and F temper material shall be as specified in 9.2.

10.3 *Quality Assurance Screening of Extrusion Press Heat Treated Pipe and Tube* — Pipe and tube heat-treated at the extrusion press shall conform to all the requirements of Section 9. In addition, hardness tests shall be performed on each extruded length or, with the approval of the purchaser, on samples selected in accordance with a mutually agreeable sampling plan. The minimum hardness control value shall be in accordance with Table 8 [Table 9] for pipe and with Table 10 [Table 11] for tube for the type of hardness tester used. The specific type of hardness tester shall be left to the discretion of the producer, but the test method shall be in accordance with

TABLE 8
HARDNESS SCREENING VALUES FOR SEAMLESS EXTRUDED TUBE, INCH-POUND UNITS[A]

Alloy and Temper	Specified Wall Thickness, in.	Hardness Number, Min.[B,C]		
		Webster	Barcol	Rockwell E
6061-T4	0.050 and over	...	64	...
-T6	0.050 through 0.075	15	76	89
	0.076 through 0.499	15	76	89
	0.500 through 1.000	15	76	...
6063-T1	0.050 through 0.500	...	50	...
-T4	0.050 through 0.500	...	60	...
-T5	0.050 through 0.500	...	65	...
-T6	0.050 through 1.000	12	72	75
6351-T6	0.050 through 0.749	16	...	...

[A] See 10.3.
[B] Alternate minimum hardness values and hardness testing devices may be used provided agreement is reached between the purchaser and supplier or producer.
[C] The hardness values shown do not guarantee material will pass the applicable mechanical property requirements but are for informational purposes only. It is the responsibility of the user of this specification to establish the relationship between the hardness values and tensile properties.

TABLE 9
HARDNESS SCREENING VALUES FOR SEAMLESS EXTRUDED TUBE, SI UNITS[A]

Alloy and Temper	Specified Wall Thickness, mm	Hardness Number, Minimum[B,C]		
		Webster	Barcol	Rockwell E
6061-T4	1.25 and over	...	64	...
-T6	1.25 through 1.50	15	76	89
	Over 1.50 through 12.5	15	76	89
	Over 12.5 through 25.0	15	76	...
6063-T1	1.25 through 12.5	...	50	...
-T4	1.25 through 12.5	...	60	...
-T5	1.25 through 12.5	...	65	...
-T6	1.25 through 25.0	12	72	75
6351-T6	1.25 through 19.00	16	...	...

[A] See Section 10.3.
[B] Alternative minimum hardness values and hardness testing devices may be used provided agreement is reached between the purchaser and supplier or producer.
[C] The hardness values shown do not guarantee material will pass the applicable mechanical property requirements but are for informational purposes only. It is the responsibility of the user of this specification to establish the relationship between the hardness values and tensile properties.

Test Methods B 647, B 648, or E 18, as applicable.

10.3.1 Individual pieces within a lot that fail to conform to the minimum applicable hardness values may be accepted provided that samples from the two pieces exhibiting the lowest minimum hardness values are tension tested and found to conform to the requirements of Table 1 [Table 2] for pipe or Table 3 [Table 4] for tube.

NOTE 6 — It may be necessary in the case of 6XXX — naturally aged tempers to allow for the elapse of four days subsequent to heat treatment for the material to attain its expected strength. Material in these tempers that has been tested for mechanical properties prior to an elapse of four days and fails may be retested after four days without prejudice.

11. Heat Treatment and Reheat Treatment Capability

11.1 As-received material in the O or F temper in alloys 2014, 2024, 6061, and 6063 (within the size limits specified in Table 3 [Table 4] and without the imposition of cold work) shall be capable of attaining the properties specified in Table 3 [Table 4] for T42 temper material,

TABLE 10
HARDNESS SCREENING VALUES FOR SEAMLESS PIPE, INCH-POUND UNITS[A]

Alloy and Temper	Pipe Size, in.	Wall Thickness, in.	Hardness Number, Min.[B,C]		
			Webster	Barcol	Rockwell E
6061-T6	less than 1 in.	0.050 and over	16	...	...
	1 in. and over	0.050 to 0.075	15	76	89
		0.076 to 0.499	15	76	89
		0.500 through 1.000	15	76	...
6063-T6	All	0.050 through 1.000	12	72	75
6351-T5	All	0.050 through 1.000	15	76	89
-T6	All	0.050 through 1.000	16	...	...

[A] See 10.3.
[B] Alternate minimum hardness values and hardness testing devices may be used provided agreement is reached between the purchaser and supplier or producer.
[C] The hardness values shown do not guarantee material will pass the applicable mechanical property requirements but are for informational purposes only. It is the responsibility of the user of this specification to establish the relationship between the hardness values and tensile properties.

TABLE 11
HARDNESS SCREENING VALUES FOR SEAMLESS PIPE, SI UNITS[A]

Alloy and Temper	Pipe Size Designation	Wall Thickness, mm	Hardness Number, Min.[B,C]		
			Webster	Barcol	Rockwell E
6061-T6	Less than 1	1.25 and over	16	...	...
	1 and over	1.25 through 1.50	15	76	89
		Over 1.50 through 12.5	15	76	89
		Over 12.5 through 25.0	15	76	...
6063-T6	All	Over 1.25 through 25.0	12	72	75
6351-T5	All	Over 1.25 through 25.0	15	76	89
-T6	All	Over 1.25 through 25.0	16	...	...

[A] See 10.3.
[B] Alternative minimum hardness values and hardness testing devices may be used provided agreement is reached between the purchaser and supplier or producer.
[C] The hardness values shown do not guarantee material will pass the applicable mechanical property requirements but are for informational purposes only. It is the responsibility of the user of this specification to establish the relationship between the hardness values and tensile properties.

upon being properly solution heat-treated and natural aged for not less than 4 days at room temperature.

11.2 As-received material in the O or F temper in alloys 2014, 2219, 6061, 6063, 7075, and 7178 (within the size limits specified in Table 3 [Table 4] and without the imposition of cold work) shall be capable of attaining the properties specified in Table 3 [Table 4] for T62 tempers, upon being properly solution and precipitation heat-treated.

11.3 Material in alloys and tempers 2014-T4, T4510, T4511, T6, T6510, and T6511 and 2024-T3, T3510, T3511, T81, T8510, and T8511 shall be capable of attaining the properties specified in Table 3 [Table 4] for the T42 temper, upon being properly resolution heat-treated and natural aged for not less than 4 days at room temperature.

11.4 Material in alloys and tempers 2219-T31, T3510, T3511, T81, T8510, and T8511, 7075-T6, T6510, and T6511 and 7178-T6, T6510 and T6511 shall be capable of attaining the properties specified in Table 3 [Table 4] for T62 tempers, upon being properly resolution heat-treated and precipitation heat-treated.

11.5 Material in T31, T3510, T3511, T4, T4510, and T4511 tempers shall be capable of attaining the properties specified in Table 3 [Table 4] for the T81, T8510, T8511, T6, T6510, and T6511 tempers, respectively, upon being properly precipitation heat-treated.

12. Stress-Corrosion Resistance

12.1 Alloy 7075 extruded tube in the T73-type tempers shall be capable of exhibiting no evidence of stress-corrosion cracking when subjected to the test specified in 12.2.

TABLE 12
LOT ACCEPTANCE CRITERIA FOR RESISTANCE TO STRESS CORROSION, INCH-POUND UNITS

Alloy and Temper	Lot Acceptance Criteria: Electrical Conductivity[A], % IACS	Lot Acceptance Criteria: Level of Tensile Properties	Lot Acceptance Status
7075–T73, T73510, and T73511	40.0 or greater	per specified requirements	acceptable
	38.0 through 39.9	per specified requirements and yield strength does not exceed minimum by more than 11.9 ksi	acceptable
	38.0 through 39.9	per specified requirements but yield strength exceeds minimum by 12.0 ksi or more	unacceptable[B]
	less than 38.0	any level	unacceptable[B]

[A] Sampling for electrical conductivity tests shall be the same as for tensile tests as specified in 9.2. Test specimens may be prepared by machining a flat, smooth surface of sufficient width for proper testing. For small sizes of tubes, a cut-out portion may be flattened and the conductivity determined on the surface. Chemical milling may be used on flat surface samples. The electrical conductivity shall be determined in accordance with Test Method E 1004 in the following locations:

Wall Thickness, in.	Location
Up through 0.100	surface of tensile sample
0.101 through 0.500	subsurface after removal of approximately 10% of thickness of tensile sample
0.501 through 1.500	subsurface at approximately center of wall thickness on a plane parallel to the longitudinal center line of the material
Over 1.500	subsurface on tensile test sample surface which is closest to the center of the wall thickness and on a plane parallel to the extrusion surface

[B] When material is found to be unacceptable, it shall be reprocessed (additional precipitation heat treatment, or re-solution heat treatment, stress relieving, straightening and precipitation heat treatment, when applicable).

12.1.1 For lot-acceptance purposes, resistance to stress-corrosion cracking for each lot shall be established by testing the previously selected tension-test samples to the criteria shown in Table 12 [Table 13].

12.1.2 For surveillance purposes, each month the producer shall perform at least one stress-corrosion test in accordance with 12.2 on each of the T73-type tempers for each thickness range 0.750 in [20.00 mm] and over listed in Table 3 [Table 4] produced that month. Each sample shall be taken from material considered acceptable in accordance with lot-acceptance criteria of Table 8 [Table 9]. A minimum of three adjacent replicate specimens shall be taken from each sample and tested. the producer shall maintain records of all lots so tested and make them available for examination at the producer's facility.

12.2 The stress-corrosion cracking test shall be performed on extruded tube with wall thickness 0.750 in. [20.00 mm] and over as follows:

12.2.1 The stress-corrosion test shall be made in accordance with Test Method G 47.

12.2.2 Specimens shall be stressed in tension in the short transverse direction with respect to the grain flow and held at constant strain. The stress level shall be 75% of the specified minimum yield strength.

12.2.3 There shall be no visual evidence of stress-corrosion cracking in any specimen, except that the retest provisions of 17.2 shall apply.

13. Cladding

13.1 The aluminum alloy coating of clad tube shall comprise the inside surface (only) of the tube and its thickness shall be approximately 10% of the total wall thickness of the tube.

13.2 When the thickness of the coating is to be determined on finished tube, tranverse cross sections of at least three tubes from the lot shall be polished for examination with a metallurgical microscope. Using a magnification of 100×, the coating thickness at four points, 90° apart, in each sample shall be measured and the average of all measurements shall be taken as the thickness. In the case of tube having a diameter larger than can properly be mounted for polishing and examination, the portions of the cross section polished for examination may consist of an arc about ½ in. [13 mm] in length.

TABLE 13
LOT ACCEPTANCE CRITERIA FOR RESISTANCE TO STRESS CORROSION, [SI UNITS]

Alloy and Temper	Lot Acceptance Criteria: Electrical Conductivity[A], % IACS	Lot Acceptance Criteria: Level of Mechanical Properties	Lot Acceptance Status
7075–T73, T73510, and T73511	40.0 or greater	per specified requirements	acceptable
	38.0 to 39.9	per specified requirements and yield strength does not exceed minimum by more than 82 MPa	acceptable
	38.0 to 39.9	per specified requirements but yield strength exceeds minimum by 83 MPa or more	unacceptable[B]
	less than 38.0	any level	unacceptable[B]

[A] Sampling for electrical conductivity tests shall be the same as for tensile tests as specified in 9.2. Test specimens may be prepared by machining a flat, smooth surface of sufficient width for proper testing. For small sizes of tubes, a cut-out portion may be flattened and the conductivity determined on the surface. Chemical milling may be used on flat surface samples. The electrical conductivity shall be determined in accordance with Test Method E 1004 in the following locations:

Wall Thickness, mm		Location
Over	Through	
...	2.50	surface of tensile sample
2.50	12.50	subsurface after removal of approximately 10% of thickness of tensile sample
12.50	40.00	subsurface at approximately center of wall thickness on a plane parallel to the longitudinal center line of the material
40.00	...	subsurface on tensile test sample surface which is closest to the center of the wall thickness and on a plane parallel to the extrusion surface

[B] When material is found to be unacceptable, it shall be reprocessed (additional precipitation heat treatment or re-solution heat treatment, stress relieving, straightening, and precipitation heat treatment, when applicable).

14. Dimensional Tolerances

14.1 Variations from the specified dimensions for the type of material ordered shall not exceed the permissible variations prescribed in the following tables of ANSI H35.2 [H35.2M]:

Table No.	Title
12.	Extruded Tube
12.1	Diameter, Round Tube
12.3	Wall Thickness, Round Tube
12.5	Length
12.7	Straightness, Tube in Straight Lengths
12.9	Squareness of Cut Ends
16.	Pipe
16.1	Outside Diameter
16.2	Wall Thickness
16.3	Weight
16.4	Length, Plain End Pipe
16.7	Diameters, Wall Thicknesses, Weights

14.2 Tolerances for tempers and sizes not included in ANSI H35.2 [H35.2M] shall be as agreed upon between producer and purchaser and shall be so specified in the contract or purchase order.

14.3 *Sampling for Inspection* — Examination for dimensional conformance shall be made to ensure conformance to the tolerance specified.

15. General Quality

15.1 Unless otherwise specified, the material shall be supplied in the mill finish and shall be uniform as defined by the requirements of this specification and shall be commercially sound. Any requirement not so covered is subject to negotiation between producer and purchaser.

15.2 When so specified in the contract or order, both ends of each length of pipe, or extruded tube except pipe of alloy 3003, temper H112, shall be threaded using an American National Standard Taper Pipe Thread. The variation from standard, when tested with the standard working gage, shall not exceed $\pm 1\frac{1}{2}$ turns. The threaded ends shall be free from burrs and suitably protected against damage in transit.

15.3 Each pipe and tube shall be examined to determine conformance to this specification with respect to general quality and identification marking. On approval of the purchaser, however, the producer may use a system of statistical quality control for such examinations.

16. Internal Quality

16.1 When specified by the purchaser at the time of placing the contract or order, each tube 0.500 in. or greater

[over 12.50 mm] in thickness, in alloys 2024, 7075, and 7178 shall be tested ultrasonically in accordance with Practice B 594 to the discontinuity acceptance limits of Table 6 [Table 7].

17. Source Inspection

17.1 If the purchaser desires that his representative inspect or witness the inspection and testing of the material prior to shipment, such agreement shall be made by the purchaser and producer as part of the purchase contract.

17.2 When such inspections or witness of inspection and testing is agreed upon, the producer shall afford the purchaser's representative all reasonable facilities to satisfy him that the material meets the requirements of this specification. Inspection and tests shall be conducted so there is no unnecessary interference with the producer's operations.

18. Retest and Rejection

18.1 If any material fails to conform to all of the applicable requirements of this specification, the inspection lot shall be rejected.

18.2 When there is evidence that a failed specimen was not representative of the inspection lot and when no other sampling plan is provided or approved by the purchaser through the contract or purchase order, at least two additional specimens shall be selected to replace each test specimen that failed. All specimens so selected for retest shall meet the requirements of the specification or the lot shall be subject to rejection.

18.3 Material in which defects are discovered subsequent to inspection may be rejected.

18.4 If material is rejected by the purchaser, the producer or supplier is responsible only for replacement of material to the purchaser. As much as possible of the rejected material shall be returned to the producer or supplier.

19. Identification Marking of Product

19.1 When specified on the purchase order or contract, all pipe and tube shall be marked in accordance with Practice B 666/B 666M.

19.2 In addition, Alloys 2014, 2024, 2219, 7075, and 7178 in the T6-, T73-, and T8-type tempers and, when specified, alloys 2014, 2024, and 6061 in the T3- and T4-type tempers and alloy 6061 in the T6-type tempers shall also be marked with the lot number in at least one location on each piece.

19.3 The requirements specified in 19.1 and 19.2 are minimum marking systems that involve added information; larger characters and greater frequencies are acceptable under this specification.

20. Packaging and Package Marking

20.1 The material shall be packaged to provide adequate protection during normal handling and transportation and each package shall contain only one size, alloy, and temper of material unless otherwise agreed upon. The type of packaging and gross weight of containers shall, unless otherwise agreed upon, be at the producer's discretion, provided that they are such as to ensure acceptance by common or other carriers for safe transportation at the lowest rate to the delivery point.

20.2 Each shipping container shall be marked with the purchase order number, material size, specification number, alloy and temper, gross and net weights, and the producer's name or trademark.

20.3 When specified in the contract or purchase order, material shall be preserved, packaged, and packed in accordance with the requirements of Practices B 660. The applicable levels shall be as specified in the contract or order. Marking for shipment of such material shall be in accordance with Fed. Std. No. 123 for civilian agencies and MIL-STD-129 for military agencies.

21. Certification

21.1 The supplier or producer shall furnish to the purchaser a certificate stating that the material has been sampled, tested, and inspected in accordance with this specification, and has met the requirements.

22. Keywords

22.1 aluminum alloy; seamless extruded tube; seamless pipe

ANNEXES

(Mandatory Information)

A1. BASIS FOR INCLUSION OF PROPERTY LIMITS

A1.1 Limits are established at a level at which a statistical evaluation of the data indicates that 99% of the population obtained from all standard material meets the limit with 95% confidence. For the products described, mechanical property limits for the respective size ranges are based on the analyses of at least 100 data from standard production material with no more than ten data from a given lot. All tests are performed in accordance with the appropriate ASTM test methods. For informational purposes, refer to "Statistical Aspects of Mechanical Property Assurance" in the Related Material section of the *Annual Book of ASTM Standards,* Vol 02.02. Mechanical property limits in this metric issue were derived from the inch-pound system limits that were developed under the above principles. As test data on metric dimensioned specimens are accumulated, some refinement of limits, particularly for elongations measured in 5D, can be anticipated.

A2. ACCEPTANCE CRITERIA FOR INCLUSION OF NEW ALUMINUM AND ALUMINUM ALLOYS IN THIS SPECIFICATION

A2.1 Prior to acceptance for inclusion in this specification, the composition of wrought or cast aluminum or aluminum alloy shall be registered in accordance with ANSI H35.1 or H35.1(M). The Aluminum Association holds the Secretariat of ANSI H35 Committee and administers the criteria and procedures for registration.

A2.2 If it is documented that the Aluminum Association could not or would not register a given composition, an alternative procedure and the criteria for acceptance shall be as follows.

A2.2.1 The designation submitted for inclusion does not utilize the same designation system as described in ANSI H35.1 or H35.1(M). A designation not in conflict with other designation systems or a trade name is acceptable.

A2.2.2 The aluminum or aluminum alloy has been offered for sale in commercial quantities within the prior twelve months to at least three identifiable users.

A2.2.3 The complete chemical composition limits are submitted.

A2.2.4 The composition is, in the judgment of the responsible subcommittee, significantly different from that of any other aluminum or aluminum alloy already in the specification.

A2.2.5 For codification purposes, an alloying element is any element intentionally added for any purpose other than grain refinement and for which minimum and maximum limits are specified. Unalloyed aluminum contains a minimum of 99.00% aluminum.

A2.2.6 Standard limits for alloying elements and impurities are expressed to the following decimal places:

Less than 0.001%	0.000X
0.001 to but less than 0.01%	0.00X
0.01 to but less than 0.10%	
Unalloyed aluminum made by a refining process	0.0XX
Alloys and unalloyed aluminum not made by a refining process	0.0X
0.10 through 0.55%	0.XX
(It is customary to express limits of 0.30 through 0.55% as 0.X0 or 0.X5.)	
Over 0.55%	0.X, X.X, etc.
(except that combined Si+Fe limits for 99.00% minimum aluminum must be expressed as 0.XX or 1.XX)	

A2.2.7 Standard limits for alloying elements and impurities are expressed in the following sequence: Silicon; Iron; Copper; Manganese; Magnesium; Chromium; Nickel; Zinc (Note A2.1); Titanium; Other Elements, Each; Other Elements, Total; Aluminum (Note A2.2).

NOTE A2.1 — Additional specified elements having limits are inserted in alphabetical order of their chemical symbols between zinc and titanium, or are specified in footnotes.

NOTE A2.2 — Aluminum is specified as *minimum* for unalloyed aluminum and as a *remainder* for aluminum alloys.

A3. PART OR IDENTIFYING NUMBERS (PINs) FOR USE BY THE DEPARTMENT OF DEFENSE

A3.1 Part numbers are essential to maintain the integrity of the Department of Defense cataloging system as multiple National Stock Numbers (NSN) exist for this product.

A3.2 Part numbers shall be formulated by selecting from the options in this specification as follows:

B241	-XXXX	-XXXX	-XX	-XX	-XX
Document Identifier	Alloy	Temper	Pipe size in 0.25 in. increments	Schedule size	Length in feet

A3.3 *Examples of Part Numbers:*

B429-6063-T6-03-40-20 indicates an ASTM B 429 standard structural pipe in 6063 alloy and T6 temper that is $\frac{3}{4}$-in. pipe size, ANSI schedule 40, with a 20-ft length.

B429-3003-H112-04-10-10 indicates an ASTM B 429 standard structural pipe in 3003 alloy and H112 temper that is 1-in. pipe size, ANSI schedule 10, with a 10-ft. length.

SPECIFICATION FOR ALUMINUM-ALLOY DIE AND HAND FORGINGS

SB-247

(Identical with ASTM Specification B 247-95a for the alloys covered except for the deletion of rolled ring forging and editorial differences. Certification and marking have been made mandatory.)

1. Scope

1.1 This specification covers aluminum-alloy (Note 1) die forgings and hand forgings as shown in Tables 2 and 3 and in Section 10 for heat-treatable alloy forgings supplied in the F temper. The maximum thicknesses for forgings within the scope of this specification are as indicated in those tables.

NOTE 1 — Throughout this specification use of the term *alloy* in the general sense includes aluminum as well as aluminum alloy.

1.2 Alloy and temper designations are in accordance with ANSI H35.1. The equivalent Unified Numbering System alloy designations are those of Table 1 preceded by A9, for example, A91100 for aluminum 1100 in accordance with Practice E 527.

1.3 For acceptance criteria for inclusion of new aluminum and aluminum alloys in this specification, see Annex A2.

1.4 A complete metric standard to Specification B 247 has been developed — Specification B 247M; therefore, no metric equivalents are presented in this specification.

2. Referenced Documents

2.1 The following documents of the issue in effect on date of material purchase form a part of this specification to the extent referenced herein:

2.1.1 *ASTM Standards*

B 557 Test Methods of Tension Testing Wrought and Cast Aluminum- and Magnesium-Alloy Products

B 597 Practice for Heat Treatment of Aluminum Alloys

B 660 Practices for Packaging/Packing of Aluminum and Magnesium Products

E 10 Test Method for Brinell Hardness of Metallic Materials

E 29 Practice for Using Significant Digits in Test Data to Determine Conformance With Specifications

E 34 Test Methods for Chemical Analysis of Aluminum and Aluminum Base Alloys

E 55 Practice for Sampling Wrought Nonferrous Metals and Alloys for Determination of Chemical Composition

E 101 Test Method for Spectrographic Analysis of Aluminum and Aluminum Alloys by the Point-to-Plane Technique

E 165 Practice for Liquid Penetrant Examination

E 227 Test Method for Optical Emission Spectrometric Analysis of Aluminum and Aluminum Alloys by the Point-to-Plane Technique

E 527 Practice for Numbering Metals and Alloys (UNS)

E 607 Test Method for Optical Emission Spectrometric Analysis of Aluminum and Aluminum Alloys by the Point-to-Plane Technique, Nitrogen Atmosphere

E 716 Practices for Sampling Aluminum and Aluminum Alloys for Spectrochemical Analysis

2.1.2 *ANSI Standard*

H35.1 Alloy and Temper Designation Systems for Aluminum

2.1.3 *Military Standards*

MIL-STD-129 Marking for Shipment and Storage (referenced in MIL-STD-649 and applies only to direct shipments to Department of Defense agencies)

MIL-STD-410 Nondestructive Testing Personnel Qualification and Certification (Eddy Current, Liquid Penetrant, Magnetic Particle, Radiographic and Ultrasonic)

2.1.4 *Military Specification*

MIL-H-6088 Heat Treatment of Aluminum Alloys

2.1.5 *Federal Standard*
Fed. Std. No. 123 Marking for Shipment (Civil Agencies)

3. Terminology

3.1 *Definitions*

3.1.1 *forging* — a metal part worked to a predetermined shape by one or more processes such as hammering, upsetting, pressing, rolling, etc.

3.1.2 *die forging* — a forging formed to the required shape and size by working in impression dies

3.1.3 *blocker-type forging* — a die forging made in a single set of die impressions to the general contour of a finished part

3.1.4 *hand forging* — a forging worked between flat or simply shaped dies by repeated strokes or blows and manipulation of the piece

3.2 *Description of Term Specific to This Standard*

3.2.1 *capable of* — The term *capable of* as used in this specification means that the test need not be performed by the producer of the material. However, should subsequent testing by the purchaser establish that the material does not meet the requirements, the material shall be subject to rejection.

4. Ordering Information

4.1 Orders for material to this specification shall include the following information:

4.1.1 this specification designation (which includes the number, the year, and the revision letter, if applicable);

4.1.2 quantity in pieces or pounds;

4.1.3 alloy (Section 7);

4.1.4 temper (Section 8); and

4.1.5 dimensions (Section 12). A drawing is required for die forgings and for hand forgings whose shapes are not simple rectangles.

4.2 Additionally, orders for material to this specification shall include the following information when required by the purchaser:

4.2.1 for die forgings, whether tensile property and grain flow survey shall be made (8.2.1.1);

4.2.2 for die forgings, whether tension tests are required using specimens not parallel to the direction of grain flow and whether such test specimens shall be prepared by a specific method (8.3.1);

4.2.3 for hand forgings, whether tension tests shall be made in other than the long transverse and short transverse directions (8.3.3);

4.2.4 whether it is required in tension tests that small elongations shall be measured by a special procedure (8.4.2);

4.2.5 whether heat treatment in accordance with Practice B 597 is required (9.2);

4.2.6 whether liquid-penetrant inspection is required (13.3);

4.2.7 whether inspection or witness of inspection and tests by the purchaser's representative is required prior to material shipment (Section 14); and

4.2.8 whether Practices B 660 applies and, if so, the levels of preservation, packaging, and packing required (Section 18).

5. Materials and Manufacture

5.1 The forgings may be manufactured by pressing, hammering, or rolling at the option of the producer.

6. Responsibility for Quality Assurance

6.1 *Responsibility for Inspection and Tests* — Unless otherwise specified in the contract or purchase order, the producer is responsible for the performance of all inspection and test requirements specific herein. The producer may use his own or any other suitable facilities for the performance of the inspection and test requirements specified herein, unless disapproved by the purchaser in the order or at the time of contract signing. The purchaser shall have the right to perform any of the inspections and tests set forth in this specification where such inspections are deemed necessary to ensure that material conforms to prescribed requirements.

6.2 *Lot Definition* — An inspection lot shall be defined as follows.

6.2.1 For heat-treated tempers, an inspection lot shall consist of forgings of the same shape, or a group of forgings of similar size and shape, of the same alloy and heat-treated in the same furnace charge. If forgings are heat-treated in a continuous furnace, forgings charged consecutively during continuous operation of the furnace shall be considered a furnace charge; for such forgings weighing 5 lb or less the maximum weight of a lot shall be 2,000 lb, and for heavier forgings it shall be 6,000 lb.

6.2.2 For nonheat-treated tempers an inspection lot shall consist of an identifiable quantity of forgings of similar size and shape of the same alloy and temper subjected to inspection at one time.

7. Chemical Composition

7.1 *Limits* — The forgings shall conform to the chemical composition limits specified in Table 1. Conformance

TABLE 1
CHEMICAL COMPOSITION LIMITS [NOTES (1), (2), (3)]

Alloy	Silicon	Iron	Copper	Manganese	Magnesium	Chromium	Nickel	Zinc	Zirconium	Titanium	Other Elements [Note (4)]		Aluminum
											Each	Total [Note (5)]	
2014	0.50–1.2	0.7	3.9–5.0	0.40–1.2	0.20–0.8	0.10	...	0.25	...	0.15 [Note (6)]	0.05	0.15	Remainder
3003	0.6	0.7	0.05–0.20	1.0–1.5	...	...	...	0.10	...	...	0.05	0.15	Remainder
5083	0.40	0.40	0.10	0.40–1.0	4.0–4.9	0.05–0.25	...	0.25	...	0.15	0.05	0.15	Remainder
6061	0.40–0.8	0.7	0.15–0.40	0.15	0.8–1.2	0.04–0.35	...	0.25	...	0.15	0.05	0.15	Remainder

NOTES:

(1) Limits are in weight percent maximum unless shown as a range or stated otherwise.

(2) Analysis shall regularly be made only for the elements specified in this Table. If, however, the presence of other elements is suspected or indicated in amounts greater than the specified limits, further analysis shall be made to determine that these elements are not present in excess of the specified limits.

(3) For purposes of determining conformance to these limits, an observed value or a calculated value obtained from analysis shall be rounded to the nearest unit in the last right-hand place of figures used in expressing the specified limit, in accordance with the rounding-off method of Practice E 29.

(4) Includes listed elements for which no specific limit is shown.

(5) Other Elements — Total shall be the sum of unspecified metallic elements 0.010% or more, rounded to the second decimal before determining the sum.

(6) Upon agreement between purchaser and producer or supplier, a zirconium-plus-titanium limit of 0.20% maximum is permitted.

shall be determined by the producer by analyzing samples taken when the ingots are poured, or samples taken from the finished or semifinished product. If the producer has determined the chemical composition during the course of manufacture, he shall not be required to sample and analyze the finished product.

NOTE 3 — It is standard practice in the United States aluminum industry to determine conformance to the chemical composition limits prior to further processing of ingots into wrought products. Due to the continuous nature of the process, it is not practical to keep a specific ingot analysis identified with a specific quantity of finished material.

7.2 *Number of Samples* — The number of samples taken for determination of chemical composition shall be as follows.

7.2.1 When samples are taken at the time the ingots are poured, at least one sample shall be taken for each group of ingots poured simultaneously from the same source of molten metal.

7.2.2 When samples are taken from forgings each weighing 5 lb or less, a sample shall be taken to represent each 2,000 lb or fraction thereof of material in the lot.

7.2.3 When samples are taken from forgings each weighing more than 5 lb, a sample shall be taken to represent each 6,000 lb or fraction thereof of material in the lot.

7.3 *Methods of Sampling* — Samples for determination of chemical composition shall be taken in accordance with one of the following methods.

7.3.1 Samples for chemical analysis shall be taken from the material by drilling, sawing, milling, turning, or clipping a representative piece or pieces to obtain a prepared sample not less than 75 g. Sampling shall be in accordance with Practice E 55.

7.3.2 Sampling for spectrochemical analysis shall be in accordance with Practice E 716. Samples for other methods of analysis shall be taken by methods suitable for the form of material being analyzed and the type of analytical method used.

7.4 *Methods of Analysis* — The determination of chemical composition shall be made in accordance with suitable chemical (Test Methods E 34), or spectrochemical (Test Methods E 101, E 227, and E 607) methods. In case of dispute, the methods of analysis shall be agreed upon between the producer and purchaser.

8. Mechanical Properties of Material as Supplied

8.1 *Limits*

8.1.1 Die forgings shall conform to the tensile requirements in Table 2.

8.1.1.1 Die forgings shall be capable of conforming to the Brinell hardness requirements in Table 2 when measured at or near the surface, except that in case of question the basis for acceptance shall be conformance with the specified minimum tensile requirements of Table 2.

8.1.2 Hand forgings shall conform to the tensile requirements in Table 3.

8.2 *Number of Specimens*

8.2.1 For die and hand forgings, there shall be at least one tension specimen taken from each lot (see 6.2).

8.2.1.1 For die forgings, when specified, a grain-flow pattern and tensile-property survey shall be made on a forging representative of the first production parts (see 8.3.2). It shall be repeated after any major change in forging technique.

8.3 *Test Specimen*

8.3.1 For die forgings, unless otherwise specified by the purchaser at the time of placing the order, test specimens shall be prepared with the axis of the specimen as nearly parallel to the direction of maximum metal flow as possible, and, at the option of the forging producer, by one of the following methods:

8.3.1.1 *Method 1* — machined from a section of the stock used in making the forgings;

8.3.1.2 *Method 2* — machined from a coupon forged from the stock;

8.3.1.3 *Method 3* — machined from a prolongation of the forging; or

8.3.1.4 *Method 4* — machined from one of the forgings in the lot.

NOTE 4 — Test specimens obtained by Method 1, 2, or 3 will usually have different properties from those obtained by Method 4. Samples obtained by Method 1, 2, or 3 indicate only the general strength level of the forging that would be obtained with proper heat treatment.

8.3.1.5 Specimens representing heat-treated forgings shall be heat treated with the forgings they represent or shall be machined from coupons that have been so treated.

8.3.2 If required, a die forging representative of the first production parts shall be selected after forging techniques have been established, and shall be tested as follows.

8.3.2.1 Tension test specimens shall be taken in two directions: (1) substantially parallel to, (2) not parallel to the forging flow lines. The locations shall be as indicated on the forging engineering drawing or, if not indicated, from generally representative areas.

TABLE 2
MECHANICAL PROPERTY LIMITS FOR DIE FORGINGS [NOTES (1), (2)]

			Specimen Axis Parallel to Direction of Grain Flow [Note (3)]			Specimen Axis Not Parallel to Direction of Grain Flow [Note (3)]			
				Elongation [Note (4)] in 2 in. or 4 × Dia, Min.,%					
Alloy and Temper	Specified Thickness, in.	Tensile Strength, [Note (4)] Min., ksi	Yield Strength [Note (4)] (0.2% Offset), Min., ksi	Forgings	Separate Test Coupon (From Stock or Forged) [Note (5)]	Tensile Strength [Note (4)], Min., ksi	Yield Strength [Note (4)] (0.2% Offset), Min., ksi	Elongation [Note (4)] in 2 in. or 4 × Dia, Min.,% Forgings	Brinell Hardness [Note (6)], Min.
2014-T4	Up thru 4.000	55.0	30.0	11	16	...	...	...	100
2014-T6	Up thru 1.000	65.0	56.0	6	8	64.0	55.0	3	125
	1.001–2.000	65.0	56.0	6	...	64.0	55.0	2	125
	2.001–3.000	65.0	55.0	6	...	63.0	54.0	2	125
	3.001–4.000	63.0	55.0	6	...	63.0	54.0	2	125
3003-H112	Up thru 4.000	14.0	5.0	18	25	...	...	...	25
5083-H111	Up thru 4.000	42.0	22.0	14	14	39.0	20.0	12	...
5083-H112	Up thru 4.000	40.0	18.0	16	16	39.0	16.0	14	...
6061-T6	Up thru 4.000	38.0	35.0	7	10	38.0	35.0	5	80

NOTES:

(1) To determine conformance to this specification, each value for tensile strength and yield strength shall be rounded to the nearest 0.1 ksi and each value for elongation to the nearest 0.5% (or the nearest 0.1% if measured in accordance with 7.6.4 of Test Methods B 557), in accordance with the rounding-off method of Practice E 29.

(2) For the basis for establishment of strength property limits, see Annex A1.

(3) These values apply to standard specimens. For the heat-treatable alloys, the thicknesses shown are the maximum thickness at time of heat treatment for which the indicated properties apply. Forgings machined prior to heat treatment shall develop the properties applicable to the heat-treated thickness provided the as-forged thickness is not more than twice the heat-treated thickness.

(4) Tensile property test requirements in any direction are limited to minimum material dimension of 2.000 in. because of the difficulty to obtain a tension test specimen suitable for routine control testing.

(5) These values apply to standard $\frac{1}{2}$-in. diameter test specimens machined from the stock used in making the forgings, or from separately forged coupons representative of the forgings.

(6) For information only. The hardness is usually measured on the surface of a forging using a 500-kgf load and 10-mm ball.

TABLE 3
MECHANICAL PROPERTY LIMITS FOR HAND FORGING [NOTES (1), (2)]

Alloy and Temper	Thickness [Note (3)], in.	Direction	Tensile Strength, Min., ksi	Yield Strength (0.2% Offset), Min., ksi	Elongation in 2 in. or 4 × Dia, Min., %
5083-H111	Up thru 4.000	Longitudinal	42.0	22.0	14
		Long transverse	39.0	20.0	12
5083-H112	Up thru 4.000	Longitudinal	40.0	18.0	16
		Long transverse	39.0	16.0	14
6061-T6	Up thru 4.000	Longitudinal	38.0	35.0	10
		Long transverse	38.0	35.0	8
		Short transverse [Note (4)]	37.0	33.0	5
	4.001–8.000	Longitudinal	37.0	34.0	8
		Long transverse	37.0	34.0	6
		Short transverse	35.0	32.0	4

NOTES:
(1) To determine conformance to this specification, each value for tensile strength and yield strength shall be rounded to the nearest 0.1 ksi and each value for elongation to the nearest 0.5% (or the nearest 0.1% if measured in accordance with 7.6.4 of Test Methods B 557), in accordance with the rounding-off method of Practice E 29.
(2) For the basis for establishment of strength property limits, see Annex A1.
(3) Maximum cross-sectional area is 256 in.^{2} Thickness at heat treatment is measured in the short transverse direction and applies to the dimension as-forged and before any machining operation.
(4) Tensile properties in any direction are limited to a minimum material dimension of 2.000 in. because of the difficulty to obtain a tensile specimen suitable for routine control testing.

8.3.2.2 A sample forging shall be sectioned at the locations of the specimens, to show the grain flow.

8.3.3 For hand forgings, the specimens shall be taken from a prolongation of the forgings or from a forging chosen to represent the lot. Tests will regularly be made only in the long transverse and short tranverse directions, but when required by the purchaser tests shall also be made in the longitudinal direction.

8.4 *Test Methods*

8.4.1 The tension tests shall be made in accordance with Test Methods B 557.

8.4.2 If required when the specified elongation is less than 3% and the elongation measured in the usual manner is less than 4%, the elongation of tension specimens shall be measured in accordance with 7.6.4 of Test Methods B 557.

8.4.3 Brinell hardness tests shall be made in accordance with Test Method E 10, by applying a 500-kgf load on a 10-mm ball for 10 to 15 s. Other equivalent combinations of load and ball or alternative methods of testing may be used if desired provided that, in case of dispute, the results secured with the 500-kgf load and 10-mm ball shall be the basis of acceptance.

9. Heat Treatment

9.1 Unless otherwise specified in 9.2, heat treatment for the applicable tempers designated in Tables 2 and 3 shall be in accordance with MIL-H-6088.

9.2 When specified, heat treatment for the applicable tempers in Tables 2 and 3 shall be in accordance with Practice B 597.

10. Producer Confirmation of Heat-Treat Response

10.1 In addition to the requirements of Section 8, die forgings in alloys 2014 and 6061 produced in the F temper (within the size limits specified in Table 2) shall, after proper solution heat treatment and precipitation heat treatment, conform to the tensile properties specified in Table 2 for T6 temper forgings.

10.2 In addition to the requirements of Section 8, hand forgings in alloy 6061 produced in the F temper (within the size limits specified in Table 3) shall, after proper solution heat treatment and precipitation heat treatment, conform to the tensile properties specified in Table 3 for T6 temper forgings.

10.3 *Number of Specimens* — One specimen from each lot of F temper die and hand forgings shall be tested to verify conformance with 10.1 and 10.2, as applicable.

11. Heat-Treatment and Reheat-Treatment Capability

11.1 As-received die and hand forgings in the F temper in alloys 2014 and 6061 (within the size limitations

specified in Tables 2 and 3) shall, after proper solution heat treatment and precipitation heat treatment, be capable of conforming to the tensile properties specified in Tables 2 and 3 for the T6 temper.

11.2 Die forgings in alloy 2014-T4 shall, after proper precipitation heat treatment, be capable of conforming to the tensile properties specified in Table 2 for the T6 temper.

12. Dimensional Tolerances

12.1 The forgings shall conform to the shape and dimensions specified in the contract or order within such dimensional tolerances as may be specified in the contract order, or referenced drawings.

13. General Quality

13.1 The forgings shall be of uniform quality and condition as defined by the requirements of this specification and shall be commercially sound. Any requirement not so covered shall be subject to agreement between the purchaser and producer.

13.2 *Visual Inspection* — Prior to visual inspection each die forging shall be etched in an aqueous solution of sodium hydroxide to provide a surface suitable for visual or penetrant inspection. At the option of the producer, an inhibitor may be used in the sodium hydroxide.

NOTE 5 — An inhibitor in the sodium hydroxide solution is desirable to prevent intergranular attack of copper-bearing alloys. A suitable solution consists of 50 g of sodium hydroxide and 2.5 g of sodium sulphide dissolved in 1 L of water. Etching time for this solution when maintained at 150 to 160°F should be 1 min. Other inhibited solutions may be used to provide the same etching effect. Subsequently, the parts shall be thoroughly rinsed in water followed by a wash in nitric acid or a chromic-sulphuric acid solution or any other equivalent solution to produce a surface suitable for visual or penetrant inspection.

13.3 Unless otherwise specified, each etched forging shall be inspected visually for surface defects such as seams, laps, bursts, and quench cracks.

13.3.1 When specified, each etched forging shall be penetrant inspected in accordance with Practice E 165, using post-emulsifiable penetrants or water-washable penetrants, for injurious surface defects. Penetrant inspection personnel shall be certified to NDT Level II in accordance with MIL-STD-410.

NOTE 6 — All parts or areas of parts to be inspected must be clean and dry before the penetrant is applied.

14. Source Inspection

14.1 If the purchaser desires that his representative inspect or witness the inspection and testing of the forgings prior to shipment, such agreement shall be made by the purchaser and producer as part of the purchase contract.

14.2 When such inspection or witness of inspection and testing is agreed upon the producer shall afford the purchaser's representative all reasonable facilities to satisfy him that the forgings meet the requirements of this specification. Inspection and tests shall be conducted so there is no unnecessary interference with the producer's operations.

15. Retest and Rejection

15.1 If any material fails to conform to all of the applicable requirements of this specification, it shall be cause for rejection of the inspection lot.

15.2 When there is evidence that a failed specimen was not representative of the inspection lot and when no other sampling plan is provided or approved by the purchaser through the contract or purchase order, at least two additional specimens shall be selected to replace each test specimen that failed. All specimens so selected for retest shall meet the requirements of this specification or the lot shall be subject to rejection.

15.3 Material in which defects are discovered subsequent to inspection may be rejected.

15.4 If material is rejected by the purchaser, the producer or supplier is responsible only for replacement of the material to the purchaser. As much as possible of the rejected material shall be returned to the producer or supplier.

16. Certification

16.1 The producer shall furnish to the purchaser a certificate stating that each lot of forgings has been sampled, tested, and inspected in accordance with this specification and has met the requirements.

17. Identification Marking of Product

17.1 Each die forging shall be identification marked in accordance with the requirements of the forging drawing.

17.2 When specified, hand forgings shall be identification marked with the producer's name or trademark, the applicable alloy and temper designations, and the specification number. Identification characters shall have a minimum height of $\frac{1}{4}$ in. The marking material shall be such as to resist obliteration during normal handling.

18. Packaging and Package Marking

18.1 The forgings shall be packaged to provide adequate protection during normal handling and transportation, and each package shall contain only one size, alloy, and temper of material unless otherwise agreed upon. The type of packaging and gross weight of containers shall, unless otherwise agreed upon, be at the producer's direction, provided they are such as to ensure acceptance by common or other carriers for safe transportation at the lowest rate to the delivery point.

18.2 Each shipping container shall be marked with the purchase order number, forging size, specification number, alloy and temper, gross and net weights, and the producer's name or trademark.

18.3 When specified in the contract or purchase order, material shall be preserved, packaged, and packed in accordance with the requirements of Practices B 660. The applicable levels shall be as specified in the contract or order. Marking for shipment of such material shall be in accordance with Fed. Std. No. 123 for civil agencies and MIL-STD-129 for military agencies.

19. Keywords

19.1 aluminum alloy; die forgings; hand forgings

ANNEXES

(Mandatory Information)

A1. BASIS FOR INCLUSION OF PROPERTY LIMITS

A1.1 Limits are established at a level at which a statistical evaluation of the data indicates that 99% of the population obtained from all standard material meets the limit with 95% confidence. For the products described, mechanical property limits for the respective size ranges are based on the analyses of at least 100 data from standard production material with no more than ten data from a given lot. All tests are performed in accordance with the appropriate ASTM test methods. For informational purposes, refer to "Statistical Aspects of Mechanical Property Assurance" in the Related Material section of the *Annual Book of ASTM Standards*, Vol 02.02.

A2. ACCEPTANCE CRITERIA FOR INCLUSION OF NEW ALUMINUM AND ALUMINUM ALLOYS IN THIS SPECIFICATION

A2.1 Prior to acceptance for inclusion in this specification, the composition of wrought or cast aluminum or aluminum alloy shall be registered in accordance with ANSI H35.1. The Aluminum Association holds the Secretariat of ANSI H35 Committee and administers the criteria and procedures for registration.

A2.2 If it is documented that the Aluminum Association could not or would not register a given composition, an alternative procedure and the criteria for acceptance shall be as follows.

A2.2.1 The designation submitted for inclusion does not utilize the same designation system as described in ANSI H35.1. A designation not in conflict with other designation systems or a trade name is acceptable.

A2.2.2 The aluminum or aluminum alloy has been offered for sale in commercial quantities within the prior twelve months to at least three identifiable users.

A2.2.3 The complete chemical composition limits are submitted.

A2.2.4 The composition is, in the judgment of the responsible subcommittee, significantly different from that of any other aluminum or aluminum alloy already in the specification.

A2.2.5 For codification purposes, an alloying element is any element intentionally added for any purpose other than grain refinement and for which minimum and maximum limits are specified. Unalloyed aluminum contains a minimum of 99.00% aluminum.

A2.2.6 Standard limits for alloying elements and impurities are expressed to the following decimal places:

Less than 0.001%	0.000X
0.001 to but less than 0.01%	0.00X
0.01 to but less than 0.10%	
Unalloyed aluminum made by a refining process	0.0XX
Alloys and unalloyed aluminum not made by a refining process	0.0X
0.10 through 0.55%	0.XX
(It is customary to express limits of 0.30 through 0.55% as 0.X0 or 0.X5.)	
Over 0.55%	0.X, X.X, etc.
(except that combined Si+Fe limits for 99.00% minimum aluminum must be expressed as 0.XX or 1.XX)	

A2.2.7 Standard limits for alloying elements and impurities are expressed in the following sequence: Silicon; Iron; Copper; Manganese; Magnesium; Chromium; Nickel; Zinc (Note A2.1); Titanium; Other Elements, Each; Other Elements, Total; Aluminum (Note A2.2).

NOTE A2.1 — Additional specified elements having limits are inserted in alphabetical order of their chemical symbols between zinc and titanium, or are specified in footnotes.

NOTE A2.2 — Aluminum is specified as *minimum* for unalloyed aluminum and as a *remainder* for aluminum alloys.

SPECIFICATION FOR GENERAL REQUIREMENTS FOR WROUGHT COPPER AND COPPER-ALLOY PLATE, SHEET, STRIP, AND ROLLED BAR

SB-248

(Identical with ASTM Specification B 248-96 for the applicable specifications and alloys covered except for deletion of Supplementary Requirements for government procurement. Certification has been made mandatory.)

1. Scope

1.1 This specification covers a group of general requirements common to several wrought product specifications. Unless otherwise specified in the purchase order or in an individual specification, these general requirements shall apply to copper and copper-alloy plate, sheet, strip, and rolled bar supplied under each of the following product specifications issued by the American Society for Testing and Materials: B 36/B 36M, B 96, B 103/B 103M, B 121/B 121M, B 122/B 122M, B 152, B 169, B 194, B 291, B 422, B 465, B 534, B 591, B 592, B 694, B 740, B 747, and B 768.

NOTE 1 — A complete metric companion to Specification B 248 has been developed — B 248M; therefore no metric equivalents are presented in this specification.

2. Referenced Documents

2.1 The following documents of the issue in effect on date of material purchase form a part of this specification to the extent referenced herein:

2.1.1 *ASTM Standards:*

B 36/B 36M Specification for Brass Plate, Sheet, Strip, and Rolled Bar

B 96 Specification for Copper-Silicon Alloy Plate, Sheet, Strip, and Rolled Bar for General Purposes and Pressure Vessels

B103/B 103M Specification for Phosphor Bronze Plate, Sheet, Strip, and Rolled Bar

B 121/B 121M Specification for Leaded Brass Plate, Sheet, Strip, and Rolled Bar

B 122/B 122M Specification for Copper-Nickel-Tin Alloy, Copper-Nickel-Zinc Alloy (Nickel Silver), and Copper-Nickel Alloy Plate, Sheet, Strip, and Rolled Bar

B 152 Specification for Copper Sheet, Strip, Plate, and Rolled Bar

B 169 Specification for Aluminum Bronze Sheet, Strip, and Rolled Bar

B 193 Test Method for Resistivity of Electrical Conductor Materials

B 194 Specification for Copper-Beryllium Alloy Plate Sheet, Strip, and Rolled Bar

B 291 Specification for Copper-Zinc-Manganese Alloy (Manganese Brass) Sheet and Strip

B 422 Specification for Copper-Aluminum-Silicon-Cobalt Alloy, Copper-Nickel-Silicon-Magnesium Alloy and Copper-Nickel-Aluminum-Magnesium Alloy Sheet and Strip

B 465 Specification for Copper-Iron Alloy Plate, Sheet, Strip, and Rolled Bar

B 534 Specification for Copper-Cobalt-Beryllium Alloy and Copper-Nickel-Beryllium Alloy Plate, Sheet, Strip and Rolled Bar

B 591 Specification for Copper-Zinc-Tin Alloys Plate, Sheet, Strip, and Rolled Bar

B 592 Specification for Copper-Zinc-Aluminum-Cobalt Plate, Sheet, Strip, and Rolled Bar

B 694 Specification for Copper, Copper-Alloy, and Copper-Clad Stainless Steel (CCS) and Copper Alloy Steel (CAS) Sheet and Strip for Electrical Cable Shielding

B 740 Specification for Copper-Nickel-Tin Spinodal Alloy Strip

B 747 Specification for Copper-Zirconium Alloy Sheet and Strip

B 768 Specification for Copper-Cobalt-Beryllium Alloy Strip and Sheet

E 8 Test Methods for Tension Testing of Metallic Materials
E 18 Test Methods for Rockwell Hardness and Rockwell Superficial Hardness of Metallic Materials
E 29 Practice for Using Significant Digits in Test Data to Determine Conformance with Specifications
E 50 Practices for Apparatus, Reagents, and Safety Precautions for Chemical Analysis of Metals
E 53 Test Methods for Chemical Analysis of Copper
E 54 Test Methods for Chemical Analysis of Special Brasses and Bronzes
E 55 Practice for Sampling Wrought Nonferrous Metals and Alloys for Determination of Chemical Composition
E 62 Test Methods for Chemical Analysis of Copper and Copper Alloys (Photometric Method)
E 75 Test Methods for Chemical Analysis of Copper-Nickel and Copper-Nickel-Zinc Alloys
E 106 Test Methods for Chemical Analysis of Copper-Beryllium Alloys
E 112 Test Methods for Determining the Average Grain Size
E 118 Test Methods for Chemical Analysis of Copper-Chromium Alloys
E 121 Test Methods for Chemical Analysis of Copper-Tellurium Alloys
E 478 Test Methods for Chemical Analysis of Copper Alloys
E 527 Practice for Numbering Metals and Alloys (UNS)

3. Terminology

3.1 *Definitions:*

3.1.1 *blank* — a piece of flat product intended for subsequent fabrication by forming, bending, cupping, drawing, or hot pressing, etc.

3.1.2 *coil* — a length of the product wound into a series of connected turns. The unqualified term "coil" as applied to "flat product" usually refers to a coil in which the product is spirally wound, with the successive layers on top of one another. (Sometimes called a "roll.")

3.1.2.1 *level or traverse wound* — a coil in which the turns are positioned into layers parallel to the axis of the coil such that successive turns in a given layer are next to one another.

3.1.2.2 *level or traverse wound on a reel or spool* — a coil in which the turns are positioned into layers on a reel or spool parallel to the axis of the reel or spool such that successive turns in a given layer are next to one another.

3.1.3 *lengths* — straight pieces of the product.

3.1.3.1 *ends* — straight pieces, shorter than the nominal length, left over after cutting the product into mill lengths, stock lengths, or specific lengths. They are subject to minimum length and maximum weight requirements.

3.1.3.2 *mill* — straight lengths, including ends, that can be conveniently manufactured in the mills. Full-length pieces are usually 8, 10, or 12 ft and subject to established length tolerances.

3.1.3.3 *multiple* — straight lengths of integral multiples of a base length, with suitable allowance for cutting if and as specified.

3.1.3.4 *specific* — straight lengths that are uniform in length, as specified, and subject to established length tolerances.

3.1.3.5 *specific with ends* — specific lengths, including ends.

3.1.3.6 *stock* — straight lengths that are mill cut and stored in advance of orders. They are usually 8, 10, or 12 ft and subject to established length tolerances.

3.1.3.7 *stock with ends* — stock lengths, including ends.

3.1.4 *plate* — a wrought flat product over 0.188 in. thick and over 12 in. wide, in straight lengths or coils (rolls).

3.1.5 *reel or spool* — a cylindrical device that has a rim at each end and an axial hole for a shaft or spindle, and on which the product is wound to facilitate handling and shipping.

3.1.6 *rolled bar* — a rolled flat product over 0.188 in. thick and up to and including 12 in. wide, with sheared, sawed, or machined edges, in straight lengths or coils (rolls).

3.1.7 *sheet* — a rolled flat product up to and including 0.188 in. thick and over 24 in. wide, in straight lengths or coils (rolls).

3.1.8 *strip* — a rolled flat product, other than flat wire, up to and including 0.188 in. thick, in straight lengths, coils (rolls), or traverse wound on reels or spools:

3.1.8.1 with slit, or sheared edges in widths up to 24 in. inclusive.

3.1.8.2 with finished drawn or rolled edges, in widths over $1\frac{1}{4}$ in. to 12 in. inclusive.

4. Materials and Manufacture

4.1 *Materials* — The material shall be of such quality and purity that the finished product shall have the properties and characteristics prescribed in the applicable product specification listed in Section 1.

TABLE 1
THICKNESS TOLERANCES
[Applicable to Specifications B 36/B 36M, B 121/B 121M, B 152, B 291, B 465, B 591 (Copper Alloy UNS No. C41100), B 592, and B 747]

	Thickness Tolerances, Plus and Minus,[A] in.								
	Strip					Sheet			
Thickness, in.	8 in. and Under in Width	Over 8 to 12 in., incl., in Width	Over 12 to 14 in., incl., in Width	Over 14 to 20 in., incl., in Width	Over 20 to 24 in., incl., in Width	Over 24 to 28 in., incl., in Width	Over 28 to 36 in., incl., in Width	Over 36 to 48 in., incl., in Width	Over 48 to 60 in., incl., in Width
0.004 and under	0.0003	0.0006	0.0006	...	...	...	...	...	...
Over 0.004 to 0.006, incl	0.0004	0.0008	0.0008	0.0013	...	...	...	...	...
Over 0.006 to 0.009, incl	0.0006	0.0010	0.0010	0.0015	...	...	...	...	...
Over 0.009 to 0.013, incl	0.0008	0.0013	0.0013	0.0018	0.0025	0.0025	0.003	0.0035	0.004
Over 0.013 to 0.017, incl	0.0010	0.0015	0.0015	0.002	0.0025	0.0025	0.003	0.0035	0.0045
Over 0.017 to 0.021, incl	0.0013	0.0018	0.0018	0.002	0.003	0.003	0.0035	0.004	0.005
Over 0.021 to 0.026, incl	0.0015	0.002	0.002	0.0025	0.003	0.003	0.0035	0.004	0.005
Over 0.026 to 0.037, incl	0.002	0.002	0.002	0.0025	0.0035	0.0035	0.004	0.005	0.006
Over 0.037 to 0.050, incl	0.002	0.0025	0.0025	0.003	0.004	0.004	0.005	0.006	0.007
Over 0.050 to 0.073, incl	0.0025	0.003	0.003	0.0035	0.005	0.005	0.006	0.007	0.008
Over 0.073 to 0.130, incl	0.003	0.0035	0.0035	0.004	0.006	0.006	0.007	0.008	0.010
Over 0.130 to 0.188, incl	0.0035	0.004	0.004	0.0045	0.007	0.007	0.008	0.010	0.012
	Rolled Bar					Plate			
Over 0.188 to 0.205, incl	0.0035	0.004	0.004	0.0045	0.007	0.007	0.008	0.010	0.012
Over 0.205 to 0.300, incl	0.004	0.0045	0.0045	0.005	0.009	0.009	0.010	0.012	0.014
Over 0.300 to 0.500, incl	0.0045	0.005	0.005	0.006	0.012	0.012	0.013	0.015	0.018
Over 0.500 to 0.750, incl	0.0055	0.007	0.007	0.009	0.015	0.015	0.017	0.019	0.023
Over 0.750 to 1.00, incl	0.007	0.009	0.009	0.011	0.018	0.018	0.021	0.024	0.029
Over 1.00 to 1.50, incl	0.022	0.022	0.022	0.022	0.022	0.022	0.025	0.029	0.036
Over 1.50 to 2.00, incl	0.026	0.026	0.026	0.026	0.026	0.026	0.030	0.036	0.044

[A] When tolerances are specified as all plus or all minus, double the values given.

4.2 *Manufacture* — The material shall be produced by either hot- or cold-working operations. It shall be finished, unless otherwise specified, by such hot working, cold working, annealing, or heat treatment as may be necessary to meet the properties specified.

4.3 *Edges* — The edges shall be slit, sheared, sawed, or rolled edges, as specified. Slit edges shall be furnished unless otherwise specified or agreed between purchaser and supplier or manufacturer. See 5.6 for edge descriptions and tolerances.

5. Dimensions, Weights, and Permissible Variations

5.1 *General* — For the purpose of determining conformance with the dimensional requirements prescribed in this specification, any measured value outside the specified limiting values for any dimension may be cause for rejection.

NOTE 2 — Blank spaces in the tolerance tables indicate either that the material is not available or that no tolerances have been established.

5.2 *Thickness* — The standard method of specifying thickness shall be in decimal fractions of an inch. For material 0.021 in. and under in thickness, it is recommended that the nominal thicknesses be stated not closer than the nearest half-thousandth. (For example, specify 0.006 or 0.0065 in., but not 0.0063 in.) For material over 0.021 in. in thickness, it is recommended that the nominal thicknesses be stated not closer than the nearest thousandth. (For example, specify 0.128 or 0.129 in., but not 0.1285 in.) A list of preferred thicknesses is shown in Appendix X1. The thickness tolerances shall be those shown in Tables 1, 2, and 3 for the product specification indicated:

5.2.1 *Table 1* — Thickness tolerances applicable to Specification B 36/B 36M, B 121/B 121M, B 152, B 291, B 465, B 591 (Copper Alloy UNS No. C41100), B 592, and B 747.

5.2.2 *Table 2* — Thickness tolerances applicable to Specifications B 96, B 103/B 103M, B 122/B 122M, B 169, B 194, B 422, B 534, B 591, B 740, and B 768 (except Copper Alloy UNS No. C41100).

TABLE 2
THICKNESS TOLERANCES
[Applicable to Specifications B 96, B 103/B 103M, B 122/B 122M, B 169, B 194, B 422, B 534, B 591, B 740 (except Copper Alloy UNS No. C41100), and B 768]

	Thickness Tolerances, Plus and Minus,[A] in.								
	Strip					Sheet			
Thickness, in.	8 in. and Under in Width	Over 8 to 12 in., incl., in Width	Over 12 to 14 in., incl., in Width	Over 14 to 20 in., incl., in Width	Over 20 to 24 in., incl., in Width	Over 24 to 28 in., incl., in Width	Over 28 to 36 in., incl., in Width	Over 36 to 48 in., incl., in Width	Over 48 to 60 in., incl., in Width
0.004 and under	0.0004	0.0008	0.0008	...	...	...	...	...	...
Over 0.004 to 0.006, incl	0.0006	0.0010	0.0010	0.0015	...	...	...	...	...
Over 0.006 to 0.009, incl	0.0008	0.0013	0.0013	0.002	...	...	...	...	...
Over 0.009 to 0.013, incl	0.0010	0.0015	0.0015	0.0025	...	...	...	...	...
Over 0.013 to 0.017, incl	0.0013	0.002	0.002	0.0025	...	...	...	...	...
Over 0.017 to 0.021, incl	0.0015	0.0025	0.0025	0.003	...	...	...	...	...
Over 0.021 to 0.026, incl	0.002	0.0025	0.0025	0.003	0.004	0.004	0.005	0.006	0.007
Over 0.026 to 0.037, incl	0.0025	0.003	0.003	0.0035	0.005	0.005	0.006	0.007	0.008
Over 0.037 to 0.050, incl	0.003	0.0035	0.0035	0.004	0.006	0.006	0.007	0.008	0.010
Over 0.050 to 0.073, incl	0.0035	0.004	0.004	0.0045	0.007	0.007	0.008	0.010	0.012
Over 0.073 to 0.130, incl	0.004	0.0045	0.0045	0.005	0.008	0.008	0.010	0.012	0.014
Over 0.130 to 0.188, incl	0.0045	0.005	0.005	0.006	0.010	0.010	0.012	0.014	0.016
	Rolled Bar					Plate			
Over 0.188 to 0.205, incl	0.0045	0.005	0.005	0.006	0.010	0.010	0.012	0.014	0.016
Over 0.205 to 0.300, incl	0.005	0.006	0.006	0.007	0.012	0.012	0.014	0.016	0.018
Over 0.300 to 0.500, incl	0.006	0.007	0.007	0.008	0.015	0.015	0.017	0.019	0.023
Over 0.500 to 0.750, incl	0.008	0.010	0.010	0.012	0.019	0.019	0.021	0.024	0.029
Over 0.750 to 1.00, incl	0.010	0.012	0.012	0.015	0.023	0.023	0.026	0.030	0.037
Over 1.00 to 1.50, incl	0.028	0.028	0.028	0.028	0.028	0.028	0.032	0.037	0.045
Over 1.50 to 2.00, incl	0.033	0.033	0.033	0.033	0.033	0.033	0.038	0.045	0.055

[A] When tolerances are specified as all plus or all minus, double the values given.

TABLE 3
SPECIAL THICKNESS TOLERANCES

Thickness, in.	Tolerances Applicable to Copper Alloy UNS No. C72500, Specification B 122/B 122M and B 740 Tolerances, Plus and Minus,[A] in., for Strip 8 in. and Under in Width	Tolerances Applicable to Specifications B 194, B 534, and B 768 Tolerances, Plus and Minus,[A] in., for Strip 4 in. and Under in Width
0.004 and under	0.0002	0.0002
Over 0.004 to 0.006, incl	0.0003	0.0003
Over 0.006 to 0.009, incl	0.0004	0.0005
Over 0.009 to 0.013, incl	0.0005	0.0006
Over 0.013 to 0.017, incl	0.0007	0.0007
Over 0.017 to 0.021, incl	0.0008	0.0008
Over 0.021 to 0.026, incl	0.0010	0.0010
Over 0.026 to 0.032, incl	0.0013	0.0010
Over 0.032 to 0.050, incl	0.0015	...

[A] If tolerances are specified as all plus or all minus, double the value given.

TABLE 4
WIDTH TOLERANCES FOR SLIT METAL AND SLIT METAL WITH ROLLED EDGES
(Applicable to all specifications listed in 2.1.1)

Width, in.	Width Tolerances,[A] Plus and Minus, in. For Thicknesses 0.004 to 0.032 in.	For Thicknesses Over 0.032 to 0.125 in.	For Thicknesses Over 0.125 to 0.188 in.	For Thicknesses Over 0.188 to 0.500 in.
2 and under	0.005	0.010	0.012	0.015
Over 2 to 8, incl.	0.008	0.013	0.015	0.015
Over 8 to 24, incl.	1/64	1/64	1/64	1/32
Over 24 to 40, incl.	1/32	1/32	1/32	3/64

[A] If tolerances are specified as all plus or all minus, double the values given.

TABLE 5
WIDTH TOLERANCES FOR SQUARE-SHEARED METAL
(Applicable to all specifications listed in 2.1.1)

Width, in.	Width Tolerances,[A] Plus and Minus, in. 1/16 in. and Under in Thickness	Over 1/16 to 1/8 in. incl in Thickness	Over 1/8 in. in Thickness
20 and under	1/32	3/64	1/16
Over 20 to 36, incl	3/64	3/64	1/16
Over 36 to 120, incl	1/16	1/16	1/16

NOTE — All lengths up to 120 in., incl.

[A] If tolerances are specified as all plus or all minus, double the values given.

TABLE 6
WIDTH TOLERANCES FOR SAWED METAL
(Applicable to all specifications listed in 2.1.1)

Width, in.	Width Tolerances,[A] Plus and Minus, in. For Lengths up to 10 ft. incl: For Thicknesses up to 1 1/2 in., incl	For Lengths up to 10 ft. incl: For Thicknesses Over 1 1/2 in.	For Length Over 10 ft: All Thicknesses
Up to 12, incl	1/32	1/16	1/16
Over 12 to 120, incl	1/16	1/16	1/16

[A] If tolerances are specified as all plus or all minus, double the values given.

TABLE 7
LENGTH TOLERANCES FOR STRAIGHT LENGTHS
(Applicable to all specifications listed in 2.1.1 except B 694)

Length, ft	Length Tolerances, in.
Specific lengths, mill lengths, multiple lengths, and specific lengths with ends 10 and under	1/4
Over 10 to 20, incl	1/2
Stock lengths and stock lengths with ends	1[A]

NOTE — The following length tolerances are all plus; if all minus tolerances are desired, use the same values; if tolerances are desired plus and minus, halve the values given.

[A] As stock lengths are cut and placed in stock in advance of orders, departure from this tolerance is not practicable.

5.2.3 *Table 3* — Special thickness tolerances applicable to Copper Alloy UNS No. C72500 when ordered to Specification B 122/B 122M, and to Specifications B 194, B 534, B 740, and B 768 as noted in the table.

5.3 *Width* — The width tolerances shall be those shown in Tables 4, 5, and 6, depending on the type of edge required (see 5.3.1, 5.3.2, and 5.3.3):

5.3.1 *Table 4* — Width tolerances for slit metal and slit metal with rolled edges.

5.3.2 *Table 5* — Width tolerances for square-sheared metal.

5.3.3 *Table 6* — Width tolerances for sawed metal.

5.4 *Length* — The material shall be furnished in coils or straight lengths of plate, sheet, strip, or rolled bar as specified. The length tolerances for straight lengths shall be those shown in Tables 7, 8, or 9, depending on the method of cutting required (see 5.4.1, 5.4.2, and 5.4.3). When ends are permitted, the length and quantity of the ends shall be in accordance with the schedule in Table 8.

5.4.1 *Table 7* — Length tolerances for straight lengths.

5.4.2 *Table 8* — Schedule of minimum length and maximum weight of ends for lengths with ends.

5.4.3 *Table 9* — Length tolerances for square-sheared metal.

TABLE 8
SCHEDULE OF MINIMUM LENGTH AND MAXIMUM WEIGHT OF ENDS FOR MILL LENGTHS, SPECIFIC LENGTHS WITH ENDS, AND STOCK LENGTHS WITH ENDS
(Applicable to all specifications listed in 2.1.1 except B 694)

	0.050 in. and Under in Thickness		Over 0.050 to 0.125 in. incl, in Thickness		Over 0.125 to 0.250 in. incl, in Thickness	
Nominal Length, ft	Minimum Length of Shortest Piece, ft	Maximum Permissible Weight of Ends, Percent of Lot Weight	Minimum Length of Shortest Piece, ft	Maximum Permissible Weight of Ends, Percent of Lot Weight	Minimum Length of Shortest Piece, ft	Maximum Permissible Weight of Ends, Percent of Lot Weight
6 to 8, incl	4	20	4	25	3	30
8 to 10, incl	6	25	5	30	4	35
10 to 14, incl	7	30	6	35	5	40

TABLE 9
LENGTH TOLERANCES FOR SQUARE-SHEARED METAL IN ALL WIDTHS 120 IN. (3.05 M) AND UNDER
(Applicable to all specifications listed in 2.1.1 except B 694)

	Length Tolerance,[A] Plus and Minus, in.		
Length, in.	For Thickness up to 1/16 in., incl	For Thicknesses Over 1/16 to 1/8 in., incl	For Thicknesses Over 1/8 in.
20 and under	1/32	3/64	1/16
Over 20 to 36	3/64	3/64	1/16
Over 36 to 120	1/16	1/16	1/16

[A] If tolerances are specified as all plus or all minus, double the values given.

TABLE 10
LENGTH TOLERANCES FOR SAWED METAL
(Applicable to all specifications listed in 2.1.1 except B 694)

Width, in.	Length Tolerance, in.
Up to 120, incl	1/4

NOTE — The following tolerances are all plus; if all minus tolerances are desired, use the same values; if tolerances are desired plus and minus, halve the values given.

5.4.4 *Table 10* — Length tolerances for sawed metal.

5.5 *Straightness* — The straightness tolerances, which are the maximum edgewise curvature (depth or arc) in any 72-in. portion of the total length, shall be those shown in Tables 11, 12, and 13, depending on the type of edge required.

TABLE 11
STRAIGHTNESS TOLERANCES FOR SLIT METAL OR SLIT METAL EITHER STRAIGHTENED OR EDGE-ROLLED
(Applicable to all specifications listed in 2.1.1)
Maximum Edgewise Curvature (Depth of Arc) in Any 72-in. Portion of the Total Length

	Straightness Tolerance, in.		
	As Slit Only		As Slit and Either Straightened or Edge Rolled
Width, in.	Shipped in Rolls	Shipped Flat	Shipped Flat, in Rolls, or on Bucks
Over 1/4 to 3/8, incl	2	1 1/2	1/2
Over 3/8 to 1/2, incl	1 1/2	1	1/2
Over 1/2 to 1, incl	1	3/4	1/2
Over 1 to 2, incl	5/8	5/8	3/8
Over 2 to 4, incl	1/2	1/2	3/8
Over 4	3/8	3/8	3/8

TABLE 12
STRAIGHTNESS TOLERANCES FOR SQUARE-SHEARED METAL
(Applicable to all specifications listed in 2.1.1)
(Not applicable to metal over 120 in. in length.)

	Maximum Edgewise Curvature (Depth of Arc) in Any 72-in. Portion of the Total Length	
	Straightness Tolerances, in.	
Thickness, in.	Up to 10 in., incl in Width	Over 10 in., in Width
1/8 and under	1/16	1/32
Over 1/8 to 1/16, incl	1/8	3/64
Over 3/16	1/8	1/16

TABLE 13
STRAIGHTNESS TOLERANCE FOR SAWED METAL
(Applicable to all specifications listed in 2.1.1)
(Not applicable to metal over 144 in. in length.)

Maximum Edgewise Curvature (Depth of Arc) in Any 72-in. Portion of the Total Length	
Width, in.	Straightness Tolerances, in.
3 and under	1/16
Over 3	3/64

TABLE 14
TOLERANCES FOR RADIUS OF COMMERCIALLY SQUARE CORNERS OF ROLLED OR DRAWN EDGES WITH SQUARE CORNERS
(Applicable to all specifications listed in 2.1.1 except B 694)

Thickness, in.	Permissible Radius of Corners, Max., in.
0.032 to 0.064, incl	0.010
Over 0.064 to 0.188, incl	0.016
Over 0.188 to 1, incl	1/32

5.5.1 *Table 11* — Straigtness tolerances for metal as slit, or as slit and straightened, or as slit and edge-rolled, or metal with drawn edges.

5.5.2 *Table 12* — Straightness tolerances for square-sheared metal.

5.5.3 *Table 13* — Straightness tolerances for sawed metal.

5.6 *Edges* — When rolled edges are required, they may be produced by either rolling or drawing to one of the following specified edge contours:

5.6.1 *Square Edges (Square Corners)* — Edges shall have square corners with essentially 90° angles and with a maximum corner radius as prescribed in Table 14.

5.6.2 *Rounded Corners* — Edges shall have rounded corners as shown in Fig. 1 with a radius as prescribed in Table 15.

5.6.3 *Rounded Edges* — Edges shall be rounded as shown in Fig. 2 with a radius as prescribed in Table 16.

5.6.4 *Full-Rounded Edges* — Edges shall be full-rounded as shown in Fig. 3 with a radius as prescribed in Table 17.

5.7 *Weight Tolerances for Hot-Rolled Material:*

5.7.1 *Table 18* — Lot weight tolerances for hot-rolled sheet and plate applicable to Specifications B 96

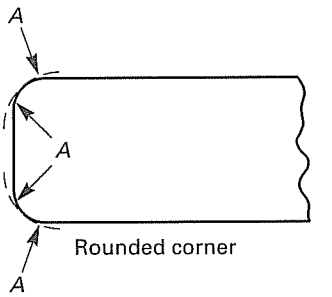

GENERAL NOTE: The arc of the rounded corner shall not necessarily be tangent at points *A*, but the product shall be commercially free from sharp, rough, or projecting edges.

FIG. 1 ROUNDED CORNERS

TABLE 15
TOLERANCES FOR RADIUS ON CORNERS OF ROLLED OR DRAWN EDGES WITH ROUNDED CORNERS
(Applicable to all specifications listed in 2.1.1 except B 694)

	Radius of Corners, in.	
Thickness, in.	Min.	Max.
Up to 0.125, incl[A]	...	...
Over 0.125 to 0.188, incl	0.016	0.048
Over 0.188 to 1, incl	0.031	0.094
Over 1 to 2, incl	0.063	0.188

[A] Not available.

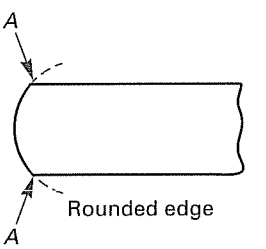

GENERAL NOTE: The arc of the rounded corner shall be substantially symmetrical with the axis of the product. The corners *A* will usually be sharp, but shall not have rough or projecting edges.

FIG. 2 ROUNDED EDGE

(Copper Alloy UNS Nos. C65500 and C65800) and B 152.

5.7.2 The weight of each lot of five or more plates or sheets of the same type and the same specified dimensions, when ordered to thickness, shall not vary from the theoretical by more than the amount prescribed in Table 18 for the product specification indicated. The weight of any individual plate or sheet may vary from the nominal

TABLE 16
TOLERANCES FOR RADIUS OF ROLLED OR DRAWN ROUNDED EDGES
(Applicable to all specifications listed in 2.1.1 except B 694)

Thickness, in.	Radius of Edges[A] Min.	Max.
Up to 0.188, incl	$\frac{3}{4}t$	$1\frac{3}{4}t$
Over 0.188	1 t	$1\frac{1}{2}t$

[A] The t refers to the measured thickness of the test specimen.

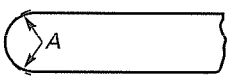

Full rounded edge

GENERAL NOTE: The arc of the rounded corner shall not necessarily be tangent at points *A*, but shall be substantially symmetrical with the axis of the product, and the product shall be commercially free from sharp, rough, or projecting edges.

FIG. 3 FULL ROUNDED EDGE

TABLE 17
TOLERANCES FOR RADIUS OF ROLLED OR DRAWN FULL-ROUNDED EDGES
(Applicable to all specifications listed in 2.1.1 except B 694)

Thickness, in.	Radius of Edges[A] Min.	Max.
All thicknesses	$\frac{1}{2}t$	$\frac{3}{4}t$

[A] The t refers to the thickness of the test specimen.

by not more than one third in excess of the tolerances prescribed in Table 18 for the product specification indicated. The tolerances for lots of less than five plates or sheets shall be governed by the tolerances for individual plates or sheets.

5.7.3 For the purpose of calculation, the densities of the materials covered by these specifications are listed in Appendix X2.

6. Workmanship, Finish, and Appearance

6.1 The material shall be free of defects, but blemishes of a nature that do not interfere with normal commercial operations are acceptable. It shall be well cleaned and free of dirt. A superficial film of residual light lubricant is normally present and is acceptable unless otherwise specified.

6.2 The surface finish and appearance shall be the normal commercial quality for the alloy, thickness, and temper ordered. When application information is provided with purchase order, the surface shall be that commercially producible for the application. Superficial films of discoloration, or lubricants, or tarnish inhibitors are permissible unless otherwise specified.

7. Sampling

7.1 *Sampling* — The lot size, portion size, and selection of sample pieces shall be as follows:

7.1.1 *Lot Size* — An inspection lot shall be 10 000 lb or less material of the same mill form, alloy, temper,

TABLE 18
LOT WEIGHT TOLERANCES FOR HOT-ROLLED SHEET AND PLATE
[Applicable to Specification B 36/B 36M, B 96 (Copper Alloy UNS Nos. C65500 and C65800), B 103/B 103M, B 122/B 122M, B 152, and B 591)]

Thickness, in.	Weight Tolerances, Plus and Minus, Percentage of Theoretical Weight: 48 in. and under in Width	Over 48 to 60 in. incl, in Width	Over 60 to 72 in. incl, in Width	Over 72 to 90 in. incl, in Width	Over 90 to 110 in. incl, in Width
$\frac{1}{8}$ and under	8	9.5	11	12.5	14
Over $\frac{1}{8}$ to $\frac{3}{16}$, incl	6.5	8	9.5	11	12.5
Over $\frac{3}{16}$ to $\frac{1}{4}$, incl	6	7.5	8.5	9	10
Over $\frac{1}{4}$ to $\frac{5}{16}$, incl	5.5	7	8	8.5	9
Over $\frac{5}{16}$ to $\frac{3}{8}$, incl	5	6	7	7.5	8
Over $\frac{3}{8}$ to $\frac{7}{16}$, incl	4.5	5	6	7	7.5
Over $\frac{7}{16}$ to $\frac{1}{2}$, incl	4	4.5	5.5	6	6.5
Over $\frac{1}{2}$ to $\frac{5}{8}$, incl	3.5	4.5	5	5.5	6
Over $\frac{5}{8}$ to $\frac{3}{4}$, incl	3	4	4.5	5	5.5
Over $\frac{3}{4}$ to 1, incl	2.75	3.5	4	4.5	5
Over 1 to $1\frac{1}{2}$, incl	2.5	3	3.5	4	4.5
Over $1\frac{1}{2}$ to 2, incl	2.25	2.75	3.25	3.75	4.25

and nominal dimensions, subject to inspection at one time or shall be the product of one cast bar from a single melt charge, whose weight shall not exceed 25 000 lb that has been continuously processed and subject to inspection at one time.

7.1.2 *Portion Size* — A portion shall be four or more pieces selected as to be representative of each lot. If the lot consists of less than four pieces, representative samples shall be taken from each piece.

7.1.2.1 *Chemical Analysis* — The sample for chemical analysis shall be taken in accordance with Practice E 55 for product in its final form. Unless otherwise required by the purchaser, at the time the order is placed, the manufacturer shall have the option of determining conformance to chemical composition by analyzing samples taken at the time the castings are poured or samples taken from the semifinished product if heat identity can be maintained throughout all operations. If the manufacturer determines the chemical composition during maufacture, he shall not be required to sample and analyze the finshed product. The minimum weight of the composite sample in accordance with Practice E 55 that is to be divided into three equal parts shall be as follows:

ASTM Designation	Weight of Sample, min., g
B 36/B 36M, B 96, B 121/B 121M, B 122/B 122M, B 152, B169, B 194, B 291, B 422, B 465, B 534, B 591, B 592, and B 740	150
B 103/B 103M	225

7.1.2.2 *Samples for All Other Tests* — Samples for all other tests shall be taken from the sample portion in 7.1.2 and be of a convenient size to accommodate the test and comply with the requirements of the appropriate ASTM Product Standards and Test Methods.

8. Number of Tests and Retests

8.1 *Chemical Requirements:*

8.1.1 When samples are taken at the time the castings are poured, at least one sample shall be analyzed for each group of castings poured simultaneously from the same source of molten metal.

8.1.2 When samples are taken from the semifinished or finished product, at least one sample representative of the product of each cast bar from a single melt charge continuously processed with heat identity maintained shall be analyzed.

8.1.3 When samples are taken from the semi-finished or finished product and heat identity has not been maintained, a single sample representative of each 10 000 lb lot, or fraction thereof, shall be analyzed. When the product piece is greater than 10 000 lb, one sample to be representative of the product piece shall be analyzed.

8.2 *Mechanical and Electrical Requirements and Grain Size* — Unless otherwise provided in the product specification, test specimens shall be taken from two of the sample pieces selected in accordance with 7.1.2. The required tests shall be made on each of the specimens so selected. In the case of copper alloy Specifications B 194, B 534, and B 740, two specimens shall be taken from each of two sample pieces selected in accordance with 7.1.2. One specimen from each sample piece shall be tested without further treatment, and the other specimen shall be tested after precipitation hardening. In the case of the requirements in Table 4, Mill Hardened Tempers, in Specifications B 194 and B 740, only two specimens need to be taken and tested, because the product is in the precipitation hardened temper as supplied. The reported value shall be the arithmetic average of the readings. In the case of hardness, three readings shall be taken and averaged for each sample.

8.3 *Retests:*

8.3.1 If the chemical analysis of the specimens prepared from samples selected in accordance with 7.1.2 fails to conform to the specified limits, analysis shall be made on a new composite sample prepared from the pieces selected in accordance with 7.1.2.

8.3.2 If one of the two tests made to determine any of the mechanical or physical properties fails to meet a specified limit, this test shall be repeated on the remaining pieces, maximum of two, selected in accordance with 7.1.2, and the results of both of these tests shall comply with the specified requirements.

8.3.3 If any test specimen shows defective machining or develops flaws, it may be discarded and another specimen substituted.

8.3.4 If the percentage of elongation of any tension test specimen is less than that specified and any part of the fracture is outside the middle two thirds of the gage length or in a punched or scribed mark within the reduced section, a retest shall be allowed.

8.3.5 If a bend test specimen fails, due to conditions of bending more severe than required by the specification, a retest shall be permitted, either on a duplicate specimen or on a remaining portion of the failed specimen.

8.3.6 After removal of defective specimens and correction of test methods, only one retest cycle is permitted. If after the retest the material fails to meet the requirements of this specification, it shall be rejected.

9. Specimen Preparation

9.1 *Chemical Analysis* — A composite sample of the semi-finished or finished product shall be prepared in accordance with Practice E 55, or as described in 7.1.2.1.

9.2 Specimens shall be prepared in accordance with the method prescribed in 10.3 for all other tests. Full cross section specimens shall be used whenever possible. Samples shall be representative of the condition of the material, and particular specimen preparation techniques shall be stated in the specific product specification.

10. Test Methods

10.1 The test method used for routine chemical analysis for specification compliance and preparation of certifications and test reports, when required, shall be at the discretion of the reporting laboratory.

10.1.1 Commonly accepted technique for routine chemical analysis of copper and copper alloys include, but are not limited to, x-ray fluorescence spectroscopy, atomic absorption spectrophotometry, argon plasma spectroscopy, and emission spectroscopy.

10.2 In case of disagreement concerning chemical composition, an applicable test method for chemical analysis may be found in Test Method E 53, or Test Methods E 54, E 62, E 75, E 106, E 118, E 121, or E 478.

10.2.1 The specific test method(s) to be used will be stated in the particular product specification.

10.2.2 In case of disagreement concerning sulfur content, the test method described in the Annex shall be used.

10.3 The following test methods shall be used for determining the mechanical and physical properties required in the specification listed in Section 1:

Tension	E 8
Grain size	E 112
Rockwell hardness	E 18
Electrical resistivity	B 193

10.3.1 The testing procedure used for a particular property is dependent upon alloy, temper, and configuration of the product. The manufacturer shall have the option of selecting the most representative procedure unless a specific procedure is specified at the time the contract is placed.

11. Significance of Numerical Limits

11.1 For the purposes of determining compliance with the specified limits for requirements of the properties listed in the following table, an observed value or a calculated value shall be rounded as indicated in accordance with the rounding method of Practice E 29.

Property	Rounded Unit for Observed or Calculated Value
Chemical composition, hardness, electrical resistivity	Nearest unit in the last right-hand place of figures of the specified limit
Tensile strength, yield strength	Nearest ksi
Elongation:	
Below 5%	Nearest multiple of 0.5%
5% and over	Nearest 1%
Grain size:	
Up to 0.055 mm, incl	Nearest multiple of 0.005 mm
Over 0.055 mm	Nearest 0.010 mm

12. Inspection

12.1 The manufacturer shall inspect and make the tests necessary to verify that the product furnished conforms to the requirements specified.

12.2 Source inspection of the material by the purchaser may be agreed upon between the maufacturer or supplier and the purchaser as part of the purchase contract. In this case, the nature of the facilities needed to satisfy the inspector representing the purchaser that the product is being furnished in accordance with this specification shall be included in the agreement. All tests and the inspection shall be conducted so as not to interfere unnecessarily with the operation of the works.

12.3 The manufacturer and the purchaser, by mutual agreement, may accomplish the final inspection simultaneously.

13. Rejection and Rehearing

13.1 Material that fails to conform to the requirements of this specification may be rejected. Rejection should be reported to the manufacturer or supplier promptly and in writing. In case of dissatisfaction with the results of the test, the manufacturer or supplier may make claim for a rehearing.

14. Certification

14.1 A manufacturer's certificate of compliance shall be furnished to the purchaser stating that each lot has been sampled, tested, and inspected in accordance with this specification and that the requirements have been met.

15. Mill Test Report

15.1 When specified in the purchase order or contract, the manufacturer or supplier shall furnish to the purchaser

a manufacturer's test report showing the results of the required tests.

16. Packaging and Package Marking

16.1 The material shall be separated by size, composition, and temper, and prepared for shipment in such a manner as to ensure acceptance by common carrier for transportation and to afford protection from the normal hazards of transportation.

16.2 Each shipping unit shall be legibly marked with the purchase order number, metal or alloy designation, temper, size, shape, gross and net weight, and name of supplier. The specification number shall be shown when specified.

16.3 *Product Identification* — The name or trademark of the manufacturer and the manufacturer's lot identification number shall be legibly stamped or stenciled on each finishing plate and sheet in two places not less than 12 in. from the edge. If the plate and sheet are too small to locate the markings as such, the marking may be placed near the center of the plate and sheet. In the case of butt straps, the markings may be placed in 12 in. from the end. The plate number and type shall be legibly stamped on each plate and on each test specimen.

17. Keywords

17.1 general requirements, plate; general requirements, sheet; general requirements, strip; general requirements, rolled bar; general requirements, wrought copper and copper alloys

ANNEX

(Mandatory Information)

A1. TEST METHOD FOR SULFUR BY COMBUSTION AND INFRARED DETECTOR

A1.1 Scope

A1.1.1 This test method covers the determination of sulfur in electrolytic cathode copper.

A1.1.2 *This standard does not purport to address all of the safety concerns, if any, associated with its use. It is the responsibility of the user of this standard to establish appropriate safety and health practices and determine the applicability of regulatory limitations prior to use.*

A1.2 Summary of Test Method

A1.2.1 The sulfur is converted to sulfur dioxide (SO_2) by combustion in a stream of oxygen and the SO_2 is measured by infrared absorption.

A1.2.2 This test method is written for use with commercial analyzers equipped to carry out the above operations automatically.

A1.3 Interferences

A1.3.1 The elements ordinarily present do not interfere.

A1.4 Apparatus

A1.4.1 *Combustion and Analyzing Instrumentation,* capable of making the required measurements.

A1.5 Reagents and Materials

A1.5.1 *Reagents:*

A1.5.1.1 *Accelerator* — Use the accelerator recommended by the instrument manufacturer which, for copper, should be sulfur and tin free.

A1.5.1.2 *Oxygen*— Ultra high purity, 99.95% min. Other grades of oxygen may be used if sulfur free, or the oxygen may be purified as described in Practices E 50.

A1.5.2 *Materials:*

A1.5.2.1 *Crucibles* — Use crucibles recommended by the manufacturer, or equivalent.

A1.5.2.2 *Crucible Tongs* — Use tongs capable of handling recommended crucibles.

A1.6 Hazards

A1.6.1 For precautions to be observed in the use of certain reagents in this test method, refer to Practice E 50.

A1.6.1.2 Use care when handling hot crucibles and operating the furnace to avoid burns and electrical shock.

A1.7 Preparation of Apparatus

A1.7.1 Assemble and test the apparatus according to the manufacturer's instructions.

A1.8 Sample Preparation

A1.8.1 The sample should be uniform in size but not finer than 40 mesh.

A1.9 Calibration

A1.9.1 *Calibration Reference Materials* — Select a minimum of two reference material with sulfur content near the mid-point and high limit.

A1.9.2 *Instrument Calibration* — Calibrate according to the manufacturer's instructions.

A1.10 Procedure

A1.10.1 Stabilize the furnace and analyzer according to the manufacturer's instruction.

A1.10.2 Transfer the weight of sample recommended by the manufacturer into a crucible and add the same amount of accelerator used in the calibration. Proceed as directed by the manufacturer's instructions.

A1.11 Calculation

A1.11.1 Since most commercially available instruments calculate percent concentrations directly, including corrections for blank and sample weight, calculations by the analyst are not required.

A1.11.2 If the analyzer does not compensate for blank and sample weight values, use the following equation:

$$\text{Sulfur, \%} = \frac{(A - B) \times C}{D}$$

where:

A = Digital Voltmeter (DVM) reading for specimen,
B = DVM reading for blank,
C = weight compensator setting, and
D = specimen weight, g

A1.12 Precision and Bias

A1.12.1 *Precision*— The precision of this test method is dependent upon sample preparation care and preciseness of calibration.

A1.12.2 *Bias*— The accuracy of this test method is dependent to a large extent upon the accuracy of the methods used to determine the sulfur concentration in the calibration standards as well as their homogeneity.

APPENDICES

(Nonmandatory Information)

X1. PREFERRED THICKNESSES FOR UNCOATED WROUGHT COPPER AND COPPER ALLOY PLATE, SHEET, STRIP, AND ROLLED BAR, UNDER 0.250 in.

X1.1 It is recommended that wherever possible material purchased to these specifications be ordered in thicknesses listed as follows:

in.	in.	in.	in.
0.004	0.014	0.040	0.112
0.005	0.016	0.045	0.125
0.006	0.018	0.050	0.140
0.007	0.020	0.056	0.160
0.008	0.022	0.063	0.180
0.009	0.025	0.071	0.200
0.010	0.028	0.080	0.224
0.011	0.032	0.090	. . .
0.012	0.036	0.100	. . .

X2. STANDARD DENSITIES

X2.1 For purposes of calculating weights, cross sections, etc., the densities of the copper alloys covered by the specifications listed in Section 1 shall be taken as follows:

ASTM Designation	Material	Copper Alloy UNS No.	Density, lb/in.^{3}
B 36/B 36M	copper-zinc alloy (brass)	C21000	0.320
		C22000	0.318
		C23000	0.316
		C24000	0.313
		C26000	0.308
		C26800	0.306
		C27200	0.305
B 96	copper-silicon alloy	C65100	0.316
		C65500	0.308
		C65800	0.308
B 103/B 103M	copper-tin alloy (phosphor bronze)	C51000	0.320
		C51100	0.320
		C52100	0.318
		C52400	0.317
		C53200	0.323
		C53400	0.322
		C54400	0.320

ASTM Designation	Material	Copper Alloy UNS No.	Density, lb/in.^{3}
B 121/B 121M	copper-zinc-lead alloy (leaded brass)	C33500	0.306
		C34000	0.306
		C34200	0.307
		C35000	0.305
		C35300	0.306
		C35340	0.306
B 122/B 122M	copper-nickel-zinc alloy (nickel silver and copper-nickel alloy)	C35600	0.307
		C70600	0.323
		C71000	0.323
		C71500	0.323
		C72200	0.323
		C72500	0.321
		C73500	0.319
		C74000	0.314
		C74500	0.313
		C75200	0.316
		C76200	0.310
		C77000	0.314
B 152	Copper UNS Nos.		
	C10100, C10200, C10300, C10400, C10500,	...	0.323
	C10700, C10800, C12000, C12200, C12300,	...	0.322
	C14530, C11000, C11300, C11400, C11600, C12500, C14200		
B 169	copper-aluminum alloy (aluminum bronze)	C60600	0.295
		C61000	0.281
		C61300	0.285
		C61400	0.285
B 194	copper-beryllium alloy	C17000	0.297
		C17200	0.297
B 291	copper-zinc-manganese alloy	C66700	0.308
B 422	copper-nickel-silicon	C63800	0.299
		C70250	0.318
		C70260	0.320
		C72400	0.311
B 465	copper-iron alloy	C19200	0.320
		C19400	0.322
		C19500	0.322
		C19600	0.320
		C19700	0.319
B 534	copper-cobalt-beryllium alloy	C17500	0.316
	copper-nickel-beryllium alloy	C17510	0.317
B 591	copper-zinc-tin alloys	C40500	0.319
		C40800	0.320
		C41100	0.318
		C41300	0.318
		C41500	0.318
		C42200	0.318
		C42500	0.316
		C43000	0.316
		C43400	0.316
B 592	copper-zinc-aluminum-cobalt alloy	C68800	0.296
	copper-aluminum-nickel alloy	C69000	0.296
B 740	copper-nickel-tin alloys	C72700	0.321
		C72900	0.323
		C72650	0.320

SPECIFICATION FOR GENERAL REQUIREMENTS FOR WROUGHT COPPER AND COPPER-ALLOY ROD, BAR, SHAPES, AND FORGINGS

SB-249

(Identical with ASTM Specification B 249-94a for the alloys and tempers covered. The option to use ammonia vapor testing in place of mercurous nitrate testing was added.)

1. Scope

1.1 This specification establishes a group of general requirements common to wrought copper and copper alloy, rod, bar, shapes, and forgings which shall apply to Specifications B 16, B 21, B 98, B 124, B 133, B 138, B 139, B 140, B 150, B 151, B 196, B 283, B 301, B 371, B 411, B 441, B 453, B 455, and B 570 to the extent referenced therein.

1.2 The chemical composition, physical, and mechanical properties, and all other requirements not included in this specification shall be prescribed in the product specification.

1.3 *This standard does not purport to address all of the safety concerns, if any, associated with its use. It is the responsibility of the user of this standard to establish appropriate safety and health practices and determine the applicability of regulatory limitations prior to use.*

1.4 This specification is the companion to SI Specification B 249M; therefore no SI equivalents are shown.

1.5 Inch-pound units are the standard except for grain size which are in SI units.

NOTE 1 — Requirements for flat wire (defined as flat products up to and including 0.188 in. thick and up to 1¼ in. in width, with all surfaces rolled or drawn, without having been slit, sheared, or sawed) including square, furnished in coils or straight lengths, or on spools, reels, or bucks are described by the wire Specifications B 206 and B 272.

2. Referenced Documents

2.1 The following documents of the issue in effect on date of material purchase form a part of this specification to the extent referenced herein:

2.2 *ASTM Standards:*

B 16 Specification for Free-Cutting Brass Rod, Bar, and Shapes for Use in Screw Machines

B 21 Specification for Naval Brass Rod, Bar, and Shapes

B 98 Specification for Copper-Silicon Alloy Rod, Bar, and Shapes

B 124 Specification for Copper and Copper-Alloy Forging Rod, Bar, and Shapes

B 133 Specification for Copper Rod, Bar, and Shapes

B 138 Specification for Manganese Bronze Rod, Bar, and Shapes

B 139 Specification for Phosphor Bronze Rod, Bar, and Shapes

B 140 Specification for Copper-Zinc-Lead (Leaded Red Brass or Hardware Bronze) Rod, Bar, and Shapes

B 150 Specification for Aluminum Bronze Rod, Bar, and Shapes

B 151 Specification for Copper-Nickel-Zinc Alloy (Nickel Silver) and Copper-Nickel Rod and Bar

B 154 Test Method for Mercurous Nitrate Test for Copper and Copper Alloys

B 193 Test Method for Resistivity of Electric Conductor Materials

B 194 Specification for Copper-Beryllium Alloy Plate, Sheet, Strip and Rolled Bar

B 196 Specification for Copper-Beryllium Alloy Rod and Bar

B 206 Specification for Copper-Nickel-Zinc Alloy (Nickel Silver) Wire and Copper-Nickel Alloy Wire

B 249M Specification for General Requirements for Wrought Copper and Copper-Alloy Rod, Bar, Shapes, and Forgings (Metric)

B 272 Specification for Flat Copper Products With Finished (Rolled or Drawn) Edges (Flat Wire and Strip)

B 283 Specification for Copper and Copper-Alloy Die Forgings
B 301 Specification for Free-Cutting Copper Rod and Bar
B 371 Specification for Copper-Zinc-Silicon Alloy Rod
B 411 Specification for Copper-Nickel-Silicon Alloy Rod and Bar
B 441 Specification for Copper-Cobalt-Beryllium (UNS No. C17500) and Copper-Nickel-Beryllium (UNS No. C17510 Rod and Bar)
B 453 Specification for Copper-Zinc-Lead Alloy (Leaded Brass) Rod
B 455 Specification for Copper-Zinc-Lead Alloy (Leaded Brass) Extruded Shapes
B 570 Specification for Copper-Beryllium Alloy Forgings and Extrusions
B 577 Test Methods for Hydrogen Embrittlement of Copper
B 858 Standard Test Method for Determination of Susceptibility to Stress Corrosion Cracking in Copper Alloys Using an Ammonia Vapor Test
E 3 Methods of Preparation of Metallographic Specimens
E 8 Test Methods for Tension Testing of Metallic Materials
E 18 Test Methods for Rockwell Hardness and Rockwell Superficial Hardness of Metallic Materials
E 29 Practice for Using Significant Digits in Test Data to Determine Conformance With Specification
E 53 Test Methods for Chemical Analysis of Copper
E 54 Test Methods for Chemical Analysis of Special Brasses and Bronzes
E 62 Test Methods for Chemical Analysis of Copper and Copper Alloys (Photometric Method)
E 75 Test Methods for Chemical Analysis of Copper-Nickel and Copper-Nickel-Zinc Alloys
E 76 Test Method for Chemical Analysis of Nickel-Copper Alloy
E 112 Test Methods for Determining Average Grain Size
E 118 Test Methods for Chemical Analysis of Copper-Chromium Alloys
E 121 Test Methods for Chemical Analysis of Copper-Tellurium Alloys
E 255 Practice for Sampling Copper and Copper Alloys for Determination of Chemical Composition
E 290 Test Method for Semi-Guided Bend Test for Ductility of Metallic Materials
E 478 Test Method for Chemical Analysis of Copper Alloys
E 527 Practice for Numbering Metals and Alloys (UNS)

2.3 *ASME Standards:*

SB-98 Copper-Silicon Alloy Rod, Bar, and Shapes
SB-150 Aluminum Bronze Rod, Bar, and Shapes
SB-151 Copper-Nickel-Zinc (Nickel Silver) and Copper-Nickel Rod and Bar
SB-283 Copper and Copper-Alloy Die Forgings (Hot Pressed)
SB-858M Test Method for Determination of Susceptibility to Stress Corrosion Cracking in Copper Alloys Using an Ammonia Vapor Test

3. Terminology

3.1 *Definitions:*

3.1.1 *bar* — a solid rectangular section, or one with two plane parallel surfaces and round or other simple regularly shaped finished edges, up to and including 12 in. in width and over 0.188 in. in thickness furnished in straight lengths or in rolls and with finished edges, either rolled, drawn, or extruded.

3.1.2 *bus conductor stock* — a bar, rod, or shape of high conductivity copper used to make electrical conductors.

3.1.2.1 *bus bar* — of solid rectangular or square cross section or a solid section with two plane parallel surfaces and round or other simple regular shaped edges.

3.1.2.2 *bus rod* — solid round and regular polygons of six and eight sides.

3.1.2.3 *bus shape* — a solid section other than regular rod, bar, plate, sheet, strip, or flat wire, and may be of oval, half oval, half round, triangular, pentagonal, or of any special cross section.

3.1.3 *capable of* — possessing the required properties or characteristics, or both, necessary to conform to specification requirement(s) when subjected to specified test(s).

3.1.4 *coil* — a length of the product wound into a series of connected turns. The unqualified term as applied to "flat wire" refers to a coil in which the product is spirally wound, with the successive layers one atop the other (sometimes called a "roll").

3.1.4.1 *coil, level or traverse wound* — a coil in which the turns are positioned into layers parallel to the axis of the coil such that successive turns in a given layer are next to one another.

3.1.4.2 *coil, level or traverse wound on a reel or spool* — a coil in which the turns are positioned into layers on a reel or spool parallel to the axis of the reel or spool such that successive turns in a given layer are next to one another.

3.1.4.3 *coil, stagger wound* — a coil in which the turns are positioned into layers approximately parallel to the axis of the coil, but not necessarily with the fixed

regularity of a level or traverse wound coil.

3.1.5 *length* — straight pieces of the product.

3.1.5.1 *lengths, ends* — straight pieces, shorter than the nominal length, left over after cutting the product into mill lengths, stock lengths, or specific lengths. They are subject to minimum length and maximum weight requirements.

3.1.5.2 *lengths, mill* — straight lengths, including ends, that can be conveniently manufactured in the mill. Full length pieces are usually 10 or 12 ft (3.05 or 3.66 m) and subject to established length tolerances.

3.1.5.3 *lengths, mulitple* — straight lengths of integral multiples of a base length, with suitable allowance for cutting when specified.

3.1.5.4 *lengths, specific* — straight lengths that are uniform in length, as specified, and subject to established length tolerances.

3.1.5.5 *lengths, specific with ends* — specific lengths, including ends.

3.1.5.6 *lengths, stock* — straight lengths that are mill cut and stored in advance of orders. They are usually 10 or 12 ft and are subject to established length tolerances.

3.1.5.7 *lengths, stock with ends* — stock lengths, including ends.

3.1.6 *reel or spool* — a cylindrical device that has a rim at each end and an axial hole for a shaft or spindle, and on which the product is wound to facilitate handling and shipping.

3.1.7 *rod* — a round, regular hexagonal, or regular octagonal solid section furnished in straight lengths (a regular hexagonal or a regular octagonal rod is a solid section having equal sides and equal angles).

3.1.7.1 *rod, piston finish* — a round rod having a special surface produced by turning or grinding to close tolerances for diameter and straightness.

3.1.7.2 *rod, shafting* — a round rod specially manufactured to the close straightness tolerances required for use in shafting.

3.1.8 *shape* — a solid section other than regular rod, bar, plate, sheet, strip, or flat wire, and may be of oval, half oval, half round, triangular, pentagonal, or of any special cross section furnished in straight lengths.

3.1.9 *unaided eye* — without visual enhancement; however, corrective spectacles necessary to obtain normal vision shall be permitted.

4. Materials and Manufacture

4.1 *Materials:*

4.1.1 The materials shall conform to the published compositional requirements of the Copper or Copper Alloy UNS No. designation specified in the ordering information.

4.1.2 In the event heat identification or traceability is required, the purchaser shall specify the details desired.

NOTE 2 — Due to the discontinuous nature of the processing of castings into wrought products, it is not always practical to identify specific casting analysis with a specific quantity of finished material.

4.2 *Manufacture:*

4.2.1 The product shall be produced by hot working, cold working, or both, and finished by such cold working, annealing or heat treatment and straightening as may be necessary to meet the properties specified.

4.2.2 *Edges* — The edge shall be drawn, extruded, or rolled; refer to Edge Contours in Section 6.

5. Chemical Composition

5.1 The material of maufacture shall conform to the compositional requirements prescribed in the product specification.

5.1.1 When a product (check) sample is analyzed by the purchaser, the material shall conform to the compositional requirements within the permitted analytical variance given in the product specification.

5.2 The composition limits established for the Copper or Copper Alloy UNS No. designation specified in the product specification does not preclude the presence of other elements. Limits may be established and analysis required for unnamed elements by agreement between the manufacturer or supplier and the purchaser.

5.3 When material composition has been determined during the course of manufacture, analysis of the finished product by the manufacturer is not required.

6. Dimensions and Permissible Variations

6.1 *General*— For the purpose of determining conformance with the dimensional requirements specified in this specification, any measured value outside the specified limiting values for any dimension may be cause for rejection.

NOTE 3 — Blank spaces in the tolerance tables indicate either that the material is not generally available or that no tolerances are established.

6.2 *Diameter or Distance Between Parallel Surfaces* — The diameter of round sections or the distance between parallel surfaces in the case of other sections, except shapes, shall not vary from that specified by more than the amounts specified in Tables 1 through 12, incl, for the product, specification indicated:

TABLE 1
TOLERANCES FOR DIAMETER OR DISTANCE BETWEEN PARALLEL SURFACES OF COLD-DRAWN ROD
[Applicable to Specifications B 16, B 21, B 98 (Copper Alloy UNS No. C65100), B 124 (Copper Alloy UNS Nos. C11000, C14500, C14700, C46400, C48200, and C48500), B 133, B 140, B 301, and B 453]

Diameter Distance Between Parallel Surface, in.	Tolerances, Plus and Minus,[A] in. Round	Hexagonal, Octagonal
Up to 0.150 incl	0.0013	0.0025
Over 0.150 to 0.500 incl	0.0015	0.003
Over 0.500 to 1.00 incl	0.002	0.004
Over 1.00 to 2.00 incl	0.0025	0.005
Over 2.00	0.15[B]	0.30[B]

[A] When tolerances are specified as all plus or all minus, double the values given.
[B] Percent of specified diameter or distance between parallel surfaces expressed to the nearest 0.001 in.

TABLE 2
TOLERANCES FOR DIAMETER OR DISTANCE BETWEEN PARALLEL SURFACES OF COLD-DRAWN ROD
[Applicable to Specifications B 98 (Copper Alloy UNS Nos. C65500 and C66100), B 124 (Copper Alloy UNS Nos. C36500, C37700, C61900, C62300, C63000, C63200, C64200, C65500, C67500, and C77400), B 138, B 139, B 150, B 151, B 196, B 371, B 411, and B 441]

Diameter Distance Between Parallel Surface, in.	Tolerances, Plus and Minus,[A] in. Round	Hexagonal, Octagonal
Up to 0.150 incl	0.002	...
Over 0.150 to 0.500 incl	0.002	0.004
Over 0.500 to 1.00 incl	0.003	0.005
Over 1.00 to 2.00 incl	0.004	0.006
Over 2.00	0.20[B]	0.40[B]

[A] When tolerances are specified as all plus or all minus, double the values given.
[B] Percent of specified diameter or distance between parallel surfaces expressed to the nearest 0.001 in.

TABLE 3
DIAMETER TOLERANCES FOR PISTON-FINISH ROD
(Applicable to Specifications B 21, B 138, B 139, and B 150

Diameter, in.	Tolerances, Plus and Minus,[A] in.
Over 0.500 to 1.00 incl	0.0013
Over 1.00 to 2.00 incl	0.0015
Over 2.00	0.10[B]

[A] When tolerances are specified as all plus or all minus, double the values given.
[B] Percent of specified diameter expressed to the nearest 0.0005 in.

TABLE 4
TOLERANCES FOR DIAMETER OR DISTANCE BETWEEN PARALLEL SURFACES OF AS-EXTRUDED ROD AND BAR
[Applicable to Specifications B 21, B 124 (Copper Alloy UNS Nos. C36500, C37700, C46400, C48200, C48500, C61900, C62300, C63000, C63200, C64200, C64210, and C67500), B 138 (Copper Alloy UNS No. C67500), and B 150]

Diameter or Distance Between Parallel Surfaces, in.	Tolerances, Plus and Minus,[A] in. Rod (Rounds, Hexagonal, and Octagonal), Bar (Rectangular and Square)
Up to 1.00 incl	0.010
Over 1.00 to 2.00 incl	0.015
Over 2.00 to 3.00 incl	0.025
Over 3.00 to 3.50 incl	0.035
Over 3.50 to 4.00 incl	0.060

[A] When tolerances are specified as all plus or all minus, double the values given.

Table 1 — Tolerances for diameter or distance between parallel surfaces of cold-drawn rod applicable to Specifications B 16, B 21, B 98 (Copper Alloy UNS No. C65100), B 124 (Copper Alloy UNS Nos. C11000, C14500, C14700, C46400, C48200, and C48500), B 133, B 140, B 301, and B 453.

Table 2 — Tolerances for diameter or distance between parallel sufaces of cold-drawn rod applicable to Specifications B 98 (Copper Alloy UNS Nos. C65500 and C66100), B 124 (Copper Alloy UNS Nos. C36500, C37700, C61900, C62300, C63000, C63200, C64200, C65500, C67500, and C77400), B 138, B 139, B 150, B 151, B 196, B 371, B 411, and B 441.

Table 3 — Diameter tolerances for piston finish rod applicable to Specifications B 21, B 138, B 139, and B 150.

Table 4 — Tolerances for diameter or distance between parallel surfaces of as-extruded rod and bar applicable to Specifications B 21, B 124 (Copper Alloy UNS Nos. C36500, C37700, C46400, C48200, C48500, C61900, C62300, C63000, C63200, C64200, C64210, and C67500), B 138 (Copper Alloy UNS No. C67500), and B 150.

Table 5 — Tolerances for diameter or distance between parallel surfaces of as-extruded rod and bar applicable to

TABLE 5
TOLERANCES FOR DIAMETER OR DISTANCE BETWEEN PARALLEL SURFACES OF AS-EXTRUDED ROD AND BAR
[Applicable to Specifications B 98 (Copper Alloy UNS Nos. C65100, C65500, and C66100), B 124 (Copper UNS Nos. C11000, C14500, and C14700, and Copper Alloy UNS Nos. C65500 and C77400), and B 138 (Copper Alloy UNS No. C67000)]

Diameter or Distance Between Parallel Surfaces, in.	Tolerances, Plus and Minus,[A] in. Rounds, Squares, Rectangles, Hexagons, Octagons
Up to 1.00 incl	0.020
Over 1.00 to 2.00 incl	0.305
Over 2.00 to 3.00 incl	0.050
Over 3.00 to 3.50 incl	0.070
Over 3.50 to 4.00 incl	0.120

[A] When tolerances are specified as all plus or all minus, double the values given.

TABLE 6
DIAMETER TOLERANCES FOR HOT-ROLLED ROUND ROD
(Applicable to Specifications B 98, B 124, B 138, B 150, B 196, and B 441)

Diameter, in.	Tolerances, Plus and Minus,[A] in.
0.250 only	+0.020 −0.010
Over 0.250 to 0.750 incl	0.015
Over 0.750 to 1.25 incl	0.020
Over 1.25 to 1.50 incl	0.030
Over 1.50 to 3.00 incl	1/16
Over 3.00	1/8

[A] When tolerances are specified as all plus or all minus, double the values given.

Specifications B 98 (Copper Alloy UNS Nos. C65100, C65500, and C66100), B 124 (Copper UNS Nos. C11000, C14500, and C14700, and Copper Alloy UNS Nos. C65500 and C77400), and B 138 (Copper Alloy UNS No. C67000).

Table 6 — Diameter tolerances for hot-rolled round rod applicable to Specifications B 98, B 124, B 138, B 150, B 196, and B 441.

Table 7 — Thickness tolerances for rectangular and square bar applicable to Specifications B 124 (Copper Alloy UNS Nos. C11000, C14500, and C14700), B 133, and B 301.

Table 8 — Thickness tolerances for rectangular and square bar applicable to Specifications B 16, B 21, B 98 (Copper Alloy UNS No. C65100), B 124 (Copper Alloy UNS Nos. C46400, C48200, and C48500), and B 140.

Table 9 — Thickness tolerances for rectangular and square bar applicable to Specifications B 98 (Copper Alloy UNS Nos. C65500 and C66100), B 124 (Copper Alloy UNS Nos. C36500, C37700, C61900, C62300, C63000, C63200, C64200, C65500, C67500, and C77440), B 138, B 139, B 150, and B 151, B 196, B 411, and B 441.

Table 10 — Width tolerances for rectangular bar applicable to Specifications B 16, B 21, B 98 (Copper Alloy UNS Nos. C65100), B 124 (Copper Alloy UNS Nos. C11000, C14500, C14700, C46400, C48200, and C48500), B 133, B 140, and B 301.

Table 11 — Width tolerances for rectangular bar applicable to Specifications B 98 (Copper Alloy UNS Nos. C65500 and C66100), B 124 (Copper Alloy UNS Nos. C36500, C37700, C61900, C62300, C63000, C63200, C64200, C65500, C67500, and C77400), B 138, B 139, B 150, B 151, B 196, B 411, and B 441.

Table 12 — Diameter tolerances for hot-forged rod and bar applicable to Specification B 138.

6.3 *Length* — Rod, bar, and shapes shall be furnished in stock lengths with ends, unless the order specifies stock lengths, specific lengths, or specific lengths with ends as specified in Table 13, Table 14, and Table 15 for the product specification indicated:

Table 13 — Length tolerances for full-length pieces applicable to Specifications B 16, B 21, B 98, B 133, B 138, B 139, B 140, B 150, B 151, B 196, B 301, B 371, B 411, B 441, and B 453.

Table 14 — Schedule of lengths (specific and stock) with ends applicable to Specifications B 16, B 21, B 133, B 138 (Copper Alloy UNS No. C67500), B 140, B 301, and B 453.

Table 15 — Schedule of lengths (specified and stock) with ends applicable to Specifications B 98, B 138 (Copper Alloy UNS No. C67000), B 139, B 150, B 151, B 196, B 371, B 411, and B 441.

6.4 *Straightness:*

6.4.1 Unless otherwise specified, drawn rod, bar, and shapes, other than shafting rod, piston-finish rod, and soft-temper copper bar (B 133), shall be furnished in straight lengths, of which the deviation from straightness shall not exceed the limitations specified in Table 16. To determine compliance with this tolerance, the lengths shall, in case of disagreement, be checked by the following method:

6.4.1.1 Place the lengths on a level table so that the arc or departure from straightness is horizontal. Measure the depth of arc to the nearest 1/32 in., using a steel scale and a straightedge. Local departure from

TABLE 7
THICKNESS TOLERANCES FOR RECTANGULAR AND SQUARE BAR
[Applicable to Specifications B 124, (Copper Alloy UNS Nos. C11000, C14500, and C14700), B 133, and B 301.]

	Thickness Tolerances, Plus and Minus,[A] in. for Widths Given in Inches					
Thickness, in.	1/2 and under	Over 1/2 to 1 1/4 incl	Over 1 1/4 to 2 incl	Over 2 to 4 incl	Over 4 to 8 incl	Over 8 to 12 incl
Over 0.188 to 0.500 incl	0.003	0.003	0.0035	0.004	0.0045	0.0055
Over 0.500 to 1.00 incl	...	0.004	0.004	0.0045	0.005	0.006
Over 1.00 to 2.00 incl	...	0.0045	0.0045	0.005	0.006	...
Over 2.00 to 4.00 incl	...	...	...	0.30[B]	...	...

[A] When tolerances are specified as all plus or all minus, double the values given.
[B] Percent of specified thickness expressed to the nearest 0.001 in.

TABLE 8
THICKNESS TOLERANCES FOR RECTANGULAR AND SQUARE BAR
[Applicable to Specifications B 16, B 21, B 98 (Copper Alloy UNS No. C65100), B 124 (Copper Alloy UNS Nos. C46400, C48200, and C48500), and B 140]

	Thickness Tolerances, Plus and Minus,[A] in. for Widths Given in Inches					
Thickness, in.	1/2 and under	Over 1/2 to 1 1/4 incl	Over 1 1/4 to 2 incl	Over 2 to 4 incl	Over 4 to 8 incl	Over 8 to 12 incl
Over 0.188 to 0.500 incl	0.0035	0.004	0.0045	0.0045	0.006	0.008
Over 0.500 to 1.00 incl	...	0.0045	0.005	0.005	0.007	0.009
Over 1.00 to 2.00 incl	...	0.005	0.005	0.006	0.008	...
Over 2.00 to 4.00 incl	...	...	...	0.30[B]	...	...

[A] When tolerances are specified as all plus or all minus, double the values given.
[B] Percent of specified thickness expressed to the nearest 0.001 in.

TABLE 9
THICKNESS TOLERANCES FOR RECTANGULAR AND SQUARE BAR
[Applicable to Specifications B 98 (Copper Alloy UNS Nos. C65500 and C66100), B 124 (Copper Alloy UNS Nos. C36500, C37700, C61900, C62300, C63000, C63200, C64200, C65500, C67500, and C77440), B 138, B 139, B 150, and B 151, B 196, B 411, and B 441]

	Thickness Tolerances, Plus and Minus,[A] in. for Widths Given in Inches					
Thickness, in.	1/2 and under	Over 1/2 to 1 1/4 incl	Over 1 1/4 to 2 incl	Over 2 to 4 incl	Over 4 to 8 incl	Over 8 to 12 incl
Over 0.188 to 0.500 incl	0.005	0.005	0.006	0.007	0.009	0.012
Over 0.500 to 1.00 incl	...	0.006	0.007	0.008	0.010	0.013
Over 1.00 to 2.00 incl	...	0.006	0.007	0.009	0.011	...
Over 2.00 to 4.00 incl	...	...	...	0.50[B]	...	...

[A] When tolerances are specified as all plus or all minus, double the values given.
[B] Percent of specified thickness expressed to the nearest 0.001 in.

TABLE 10
WIDTH TOLERANCES FOR RECTANGULAR BAR
[Applicable to Specifications B 16, B 21, B 98 (Copper Alloy UNS Nos. C65100), B 124 (Copper Alloy UNS Nos. C11000, C14500, C14700, C46400, C48200, and C48500), B 133, B 140, and B 301]

Width, in.	Tolerances, Plus and Minus,[A] in.
Over 0.188 to 0.500 incl	0.0035
Over 0.500 to 1.25 incl	0.005
Over 1.25 to 2.00 incl	0.008
Over 2.00 to 4.00 incl	0.012
Over 4.00 to 12.00 incl	0.30[B]

[A] When tolerances are specified as all plus or all minus, double the values given.
[B] Percent of specified width expressed to the nearest 0.001 in.

TABLE 11
WIDTH TOLERANCES FOR RECTANGULAR BAR
[Applicable to Specifications B 98 (Copper Alloy UNS Nos. C65500 and C66100), B 124 (Copper Alloy UNS Nos. C36500, C37700, C61900, C62300, C63000, C63200, C64200, C65500, C67500, and C77400), B 138, B 139, B 150, B 151, B 196, B 411, and B 441]

Width, in.	Tolerances, Plus and Minus,[A] in.
Over 0.188 to 0.500 incl	0.005
Over 0.500 to 1.25 incl	0.007
Over 1.25 to 2.00 incl	0.010
Over 2.00 to 4.00 incl	0.015
Over 4.00 to 12.00 incl	0.50[B]

[A] When tolerances are specified as all plus or all minus, double the values given.
[B] Percent of specified width expressed to the nearest 0.001 in.

TABLE 12
DIAMETER TOLERANCES FOR HOT-FORGED ROD AND BAR (Applicable to Specification B 138)

Diameter or Distance Between Parallel Surfaces, in.	Tolerances, All Plus, in.	
	As-Forged	Rough-Turned
Over 3.50	0.125	0.050

straightness should be measured with a 1-ft straightedge and a feeler gage.

6.4.2 Shafting rod, when so specified, shall comply with the tolerances of Table 17. To determine compliance with this paragraph, shafting shall, in case of disagreement, be checked by the folowing method:

6.4.2.1 Place the shaft upon two freely rotating supports, one fourth of the shaft length extending beyond each support. Measure the departure from straightness at each end and at the center by means of a dial gage

TABLE 13
LENGTH TOLERANCES FOR ROD, BAR, AND SHAPES
(FULL-LENGTH PIECES SPECIFIC AND STOCK LENGTHS WITH OR WITHOUT ENDS)
[Applicable to Specifications B 16, B 21, B 98, B 133, B 138, B 139, B 140, B 150, B 151, B 196, B 301, B 371, B 411, B 441, and B 453]

Length Classification	Tolerances, All Plus, in. (Applicable only to Full-Length Pieces)
Specific lengths	3/8
Specific lengths with ends	1
Stock lengths with or without ends	1[A]

NOTE 1 — The length tolerances in this table are all plus; if all minus tolerances are desired, use the same values; if tolerances are desired plus and minus, halve the values given.

[A] As stock lengths are cut and placed in stock in advance of orders, departure from this tolerance is not practicable.

mounted on a suitable movable block and set successively at the three points to be measured while rotating the shaft slowly and carefully to avoid vibration. The total range of the dial reading at a given point, divided by two, gives the departure from straightness at that point.

6.5 *Edge Contours:*

6.5.1 *Finish* — All rectangular and square bar shall have finished edges.

6.5.2 *Angles* — All regular polygonal sections shall have substantially exact angles. For hexagonal and octagonal rods cold-drawn to size, corner radii shall not exceed 1/16 in. for sizes up to 2 in., incl., and 3/32 in. for sizes over 2 in.

6.5.3 *Rectangular and Square Bar* — Unless otherwise specified, square corners shall be furnished on rectangular and square bar. When so ordered, the edge contours described in 6.5.4 through 6.5.7 inclusive shall be furnished.

6.5.4 *Square Corners* — Unless otherwise specified, bar shall be finished with commercially square corners with a maximum permissible radius of 1/32 in. for bars over 3/16 in. to 1 in., inclusive, in thickness, and 1/16 in. for bars over 1 in. in thickness.

6.5.5 *Rounded Corners* — When specified, bar shall be finished with corners rounded as shown in Fig. 1 to a quarter circle with a radius of 1/16 in. for bars over 3/16 in. to 1 in., inclusive, in thickness, and 1/8 in. for bars over 1 in. in thickness. The tolerance on the radius shall be ±25%.

6.5.6 *Rounded Edge* — When specified, bar shall be finished with edges rounded as shown in Fig. 2, the

TABLE 14
SCHEDULE OF LENGTHS (SPECIFIC AND STOCK) WITH ENDS FOR ROD BAR
[Applicable to Specifications B 16, B 21, B 133, B 138 (Copper Alloy UNS No. C67500), B 140, B 301, and B 453.]

Diameter or Distance Between Parallel Surfaces for Round, Hexagonal, and Octagonal Rod, and Square Bar, in.	Rectangular Bar, Area,[A] in.^{2}	Nominal Length, ft	Shortest Permissible Length,[B] % of Nominal Length	Maximum Permissible Weight of Ends, % of Lot Weight
0.500 and under	0.250 and under	6 to 14, incl	75	20
Over 0.500 to 1.00, incl	over 0.250 to 1.00, incl	6 to 14, incl	70	30
Over 1.00 to 1.50, incl	over 1.00 to 2.25, incl	6 to 12, incl	60	40
Over 1.50 to 2.00, incl	over 2.25 to 4.00, incl	6 to 12, incl	50	45
Over 2.00 to 3.00, incl	over 4.00 to 9.00, incl	6 to 10, incl	40	50

[A] Width times thickness, disregarding any rounded corners or edges.
[B] Expressed to the nearest $\frac{1}{2}$ ft.

TABLE 15
SCHEDULE OF LENGTHS (SPECIFIC AND STOCK) WITH ENDS FOR ROD AND BAR
[Applicable to Specifications B 98, B 138 (Copper Alloy UNS No. C67000), B 139, B 150, B 151, B 196, B 371, B 411, and B 441]

Diameter or Distance Between Parallel Surfaces for Round, Hexagonal, and Octagonal Rod, and Square Bar, in.	Rectangular Bar, Area,[A] in.^{2}	Nominal Length, ft	Shortest Permissible Length,[B] Percent of Nominal Length	Maximum Permissible Weight of Ends, Percent of Lot Weight
0.500 and under	0.250 and under	6 to 12 incl	65	30
Over 0.500 to 1.00 incl	over 0.250 to 1.00 incl	6 to 12 incl	60	40
Over 1.00 to 1.50 incl	over 1.00 to 2.25 incl	6 to 10 incl	50	50
Over 1.50 to 2.00 incl	over 2.25 to 4.00 incl	6 to 10 incl	40	60

[A] Width times thickness, disregarding any rounded corner or edges.
[B] Expressed to the nearest $\frac{1}{2}$ ft.

radius of curvature being $1\frac{1}{4}$ times the thickness of the bar for bars over $\frac{3}{16}$ in. in thickness. The tolerance on the radius shall be one fourth the thickness of the bar.

6.5.7 *Full Rounded Edge* — When specified, bar shall be finished with substantially uniform round edges, the radius of curvature being approximately one half the thickness of the product, as shown in Fig. 3, but in no case to exceed one half the thickness of the product by more than 25%.

7. Workmanship, Finish, and Appearance

7.1 *Workmanship:*

7.1.1 The product shall be free from defects, but blemishes of a nature that do not interfere with normal operations are acceptable. The product shall be well-cleaned and free from dirt.

7.2 *Finish:*

7.2.1 A superficial film of residual light lubricant is normally present and is permissible unless otherwise specified.

7.3 *Appearance:*

7.3.1 The surface finish and appearance shall be the normal quality for product ordered.

7.3.2 When application information is provided with the contract or purchase order, the surface shall be that normally produced for the application.

7.3.3 Superficial films of discoloration, or lubricants, or tarnish inhibitors are permissible unless otherwise specified.

8. Sampling

8.1 The lot size, portion size, and selection of sample pieces shall be as follows:

8.1.1 *Lot Size* — An inspection lot shall be 10 000 lb, or less, of the same mill form, alloy, temper, and nominal dimensions, subject to inspection at one time. Alternatively a lot shall be the product of one cast bar from a single melt charge, whose weight shall not exceed 20 000 lb that has been continuously processed and subject to inspection at one time.

TABLE 16
STRAIGHTNESS TOLERANCES FOR ROD, BAR, AND SHAPES

Form and Size, in	Length, ft	Maximum Curvature (Depth of Arc), in.
For General Use		
(Applicable to Specifications B 16, B21, B 98, B 133, B 138, B 139, B 140, B 150, B 151, B 196, B 301, B 371, B 411, B 441, and B 453)		
Drawn rod	up to 2	1/32
	incl 2 to 5	1/32 in any 2-ft portion[A]
	incl 5 to 10	1/8 in any 5-ft portion[A]
	10 and over	1/2 in any 10-ft portion[A]
Bar and Shapes (rolled or drawn)	6 and over	1/2 in any 6-ft portion[A,B]
Drawn Rod — For Automatic Screw Machine Use (Applicable to Specifications B 16, B140, B 301, and B 453)		
Round only:		
Under 1/4	10 and over	1/2 in any 10-ft portion[A]
1/4 and over	10 and over	1/4 in any 10-ft portion[A]
Local departure from straightness, 1/4 and over only	...	1/64 in any 1-ft portion of the total length
Hexagonal and octagonal:		
Under 1/4	10 and over	1/2 in any 10-ft portion[A]
1/4 and over	10 and over	3/8 in any 10-ft portion[A]

[A] Of total length.
[B] Applicable to any longitudinal surface or edge.

8.1.2 *Portion Size* — The portion shall be four or more pieces selected as to be representative of each lot. Should the lot consist of less than five pieces, representative samples shall be taken from each piece.

8.2 *Chemical Analysis:*

8.2.1 The sample for chemical analysis shall be taken in accordance with Practice E 255 for product in its final form from the pieces selected in 8.1.2 and combined into one composite sample. The minimum weight of the composite sample shall be 150 g.

8.2.2 Instead of sampling as directed in 8.2.1, the manufacturer shall have the option of sampling at the time castings are poured or from the semifinished product. When samples are taken during the course of manufacture, sampling of the finished product by the maufacturer is not required. The number of samples taken for determination of chemical composition shall be as follows:

TABLE 17
STRAIGHTNESS TOLERANCES FOR SHAFTING
(Applicable to Specifications B 21, B 138, B 139, and B 150)

Length of Shaft, ft	Maximum Permissible Departure from Straightness of Either Center or End Portions, in.	Minimum Diameter Applicable for Length Indicated, in.
Up to 6, incl	0.005	1/2
7	0.007	1/2
8	0.009	1/2
9	0.012	1/2
10	0.014	1/2
11	0.017	1/2
12	0.020	1/2
14	0.028	5/8
16	0.036	3/4
18	0.045	1
20	0.055	1 1/4
22	0.068	1 1/2
24	0.078	1 3/4
26	0.094	2

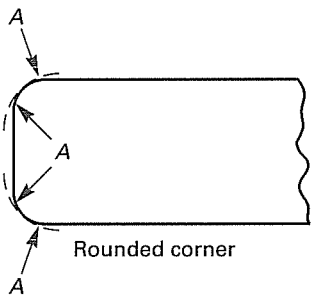

GENERAL NOTE: The arc shall not necessarily be tangent at points *A*, but the product shall be commercially free from sharp, rough, or projecting edges.

FIG. 1 ROUNDED CORNERS

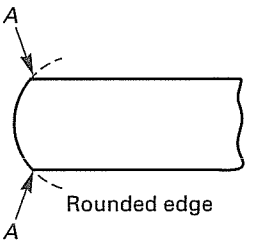

GENERAL NOTE: The arc shall be substantially symmetrical with the axis of the product. The corners *A* will usually be sharp, but shall not have rough or projecting edges.

FIG. 2 ROUNDED EDGE

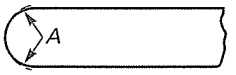

Full rounded edge

GENERAL NOTE: The arc shall not necessarily be tangent at points *A*, but shall be substantially symmetrical with the axis of the product, and the product shall be commercially free from sharp, rough, or projecting edges.

FIG. 3 FULL ROUNDED EDGE

8.2.2.1 When samples are taken at the time the castings are poured, at least one sample shall be taken for each group of castings poured from the same source of molten metal.

8.2.2.2 When samples are taken from semifinished product, a sample shall be taken to represent each 10 000 lb, or fraction thereof, except that not more than one sample shall be required per piece.

8.2.2.3 Only one sample need be taken from the semifinished product of one cast bar from a single melt charge continuously processed.

8.3 *Samples for All Other Tests* — Samples for all other tests shall be taken from the sample portions selected in 9.1.2 and be of a convenient size to accommodate the test and comply with the requirements of the appropriate product specification and test method.

9. Number of Tests and Retests

9.1 *Tests:*

9.1.1 *Chemical Analysis* — Chemical composition shall be determined as the per element mean of results from at least two replicate analyses of the sample(s) and the results of each replication shall meet the requirements of the product specification.

9.1.2 *Tensile Strength, Grain Size, Electrical Resistivity* — The test results for each individual test specimen shall be reported as the average of results obtained from specimens prepared from each of two pieces selected in 9.1.2 and each specimen must meet the requirements of the product specification. In the case of copper-beryllium alloy, two specimens shall be taken for each required test. One specimen from each piece shall be tested without further treatment, and the other specimen shall be tested after precipitation hardening.

9.1.2.1 *Rockwell Hardness* — The value of the hardness number of each specimen shall be established as the arithmetical average of at least three readings and each specimen must meet the requirements of the product specification.

9.1.2.2 *Bend, Hydrogen Embrittlement, Mercurous Nitrate, and Ammonia Vapor Tests*— All specimens tested must meet the product requirements to qualify for specification conformance.

9.1.3 *Other Requirements*— At least two specimens shall be subjected to test for each of the other requirements and each specimen shall conform to the test requirements.

9.2 *Retests:*

9.2.1 When requested by the manufacturer or supplier, a retest shall be permitted when test results obtained by the purchaser fail to conform with the product specification requirement(s).

9.2.2 Retesting shall be as directed in the product specification for the initial test except for the number of test specimens which shall be twice that normally required for the test. Test results for all specimens shall conform to the product specification requirement(s) in retest and failure to comply shall be cause for lot rejection.

10. Specimen Preparation

10.1 *Chemical Analysis* — Sample preparation shall be in accordance with Practice E 255.

10.1.1 Analytical specimen preparation shall be the responsibility of the reporting laboratory.

10.2 *Tensile Test* — The test specimen shall conform to the requirements prescribed for the particular product in the Test Specimen Section of Test Methods E 8. (see Round Specimens; Specimens for Wire, Rod, and Bar; Specimens for Rectangular Bar; or Specimens for Shapes Structure or Other).

10.3 *Grain Size* — The test specimen shall be prepared in accordance with Methods E 3.

10.4 *Rockwell Hardness* — The test specimen shall be of a size and shape to permit testing by the available test equipment and shall be taken to permit testing in a plane parallel or perpendicular to the direction of deformation given to the product.

10.4.1 The surface of the test specimen shall be sufficiently smooth and even to permit the accurate determination of hardness.

10.4.2 The specimen shall be free of scale and foreign matter and care shall be taken to avoid any change in condition, that is, heating or cold working.

10.5 *Electrical Resisitivity* — Test specimens are to be full size where practical and shall be the full cross section of the material it represents.

10.5.1 When the test specimen is cut from material in bulk, care shall be taken that the properties are not

appreciably altered in the preparation. Plastic deformation may work harden a material and tend to raise the resistivity, while heating tends to anneal the material with a consequent reduction in resistivity.

10.5.2 When necessary, products are to be rolled or cold-drawn to a wire approximately 0.080 in. (12 gage AWG) and at least 160 in. in length. The specimen shall be annealed at approximately 935°F ± 10°F for 30 min in an inert atmosphere and cooled to ambient temperature in the inert atmosphere.

10.5.3 For heat-treatable material, diameter and heat treatment shall be agreed upon between the manufacturer and the purchaser.

10.6 *Mercurous Nitrate Test* — Test specimens shall conform to the requirements of Test Methods B 154.

10.6.1 The specimen shall be obtained without bending, springing, polishing, or any other preparation.

10.7 *Ammonia Vapor Test* — Test specimens shall conform to the requirements of Test Methods B 858.

10.7.1 The specimen shall be obtained without bending, springing, polishing, or any other preparation.

10.8 *Hydrogen Embrittlement* — Test specimen shall conform to the appropriate requirements of the Test Specimen Section of Test Method B 577.

10.9 *Bend Test:*

10.9.1 The test specimen shall be prepared in accordance with Test Method E 290.

10.9.2 When impractical to test full-size specimens but practical to test full-thickness specimens from material not exceeding 1½ in. in nominal thickness, the specimens shall be of the thickness of the material and the ratio of width to thickness shall be 2:1, provided the width is not less than ¾ in.

10.9.3 When material exceeds ½ in. in thickness diameter, or distance across flats, the specimen may be machined when full-section or full-thickness specimens are not used. The diameter or thickness of the specimen shall be at least ½ in. and the ratio of width to thickness of rectangular specimens shall be 2:1. In rectangular specimens of reduced thickness, the outside or tension surface shall be an as-fabricated surface.

10.10 Should any test specimen show defective machining or develop flaws, it may be discarded and another specimen substituted.

11. Test Methods

11.1 The test method(s) used for quality control or production control, or both, for the determination of conformance with product property requirements are discretionary.

11.1.1 The test method(s) used to obtain data for the preparation of certification or test report, or both, shall be made available to the purchaser on request.

11.2 *Chemical Composition:*

11.2.1 In case of dispute, an applicable test method may be found in the following documents: E 53, E 54, E 62, E 75, E 76, E 118, E 121, E 478, and E 581.

11.2.1.1 The specific method to be used for each specified element shall be prescribed in the product specification.

11.2.1.2 The test methods for the determination of composition for copper-beryllium alloys shall be as described in Annex A1 of Specification B 194.

11.2.2 The method(s) to be used for the determination of element(s) resulting from contractual or purchase order agreement shall be as agreed upon between the manufacturer or supplier and purchaser.

11.3 *Other Tests:*

11.3.1 The product in final form shall conform with physical, mechanical, and other requirements specified in the product specification when subjected to test in accordance with the appropriate test method in the following table:

Test	ASTM Designation
Grain size	E 112
Electrical resistivity	B 193
Tensile	E 8
Rockwell hardness	E 18
Hydrogen embrittlement	B 577
Semi-Guided Bend	E 290

11.3.2 *Grain Size* — The intercept method shall be used to determine grain size in case of dispute.

11.3.3 *Electrical Resistivity* — The limit of measurement uncertainty for B 193 shall be ±0.30% as a routine method and ±0.15% as an umpire method.

11.3.4 *Tensile:*

11.3.4.1 The method to be used for determining yield strength shall be specified in the product specification.

11.3.4.2 Elongation shall be determined in accordance with the first two paragraphs of the subsection entitled "Elongation" of the Procedure section of Test Methods E 8.

11.3.4.3 Whenever test results are obtained from both full size and machined specimens and they differ, the test results from the full size specimens shall prevail.

11.3.4.4 Test results are not seriously affected by variations in speed of testing. A considerable range of

testing speed is permitted; however, the rate of stressing to the yield strength should not exceed 100 ksi/min. Above the yield strength the movement per minute of the testing machine head under load should not exceed 0.5 in./in. or gage length (or distance between grips for full section specimens).

11.3.5 *Rockwell Hardness* — Special attention should be given the Standardizing Machine section of Test Methods E 18.

11.3.6 *Hydrogen Embrittlement* — In case of dispute, Procedure C, Closed Bend Test, of Test Methods B 577 shall be used.

11.4 The product shall meet the performance requirements of the product specification when subjected to the following test as required:

11.4.1 *Stress Corrosion Cracking Susceptibility Test* — The material shall be tested for susceptibility to stress corrosion cracking by either or both the Mercurous Nitrate Test or Ammonia Vapor Test. The test method(s) to be used shall be agreed upon by the manufacturer, or supplier, and the purchaser.

11.4.1.1 *Mercurous Nitrate Test* — The material shall be subjected to test in accordance with Test Method B 154.

11.4.1.2 *Ammonia Vapor Test* — The material shall be subjected to test in accordance with Test Method B 858.

11.4.2 *Semi-Guided Bend Test* — The mandrel radius and bend angle shall be specified in the product specification. When the test specimen has been machined, the retained original surface shall constitute the outer periphery of the bend that shall be made on a radius equal to that dimension of the machined radial to the bend.

12. Significance of Numerical Limits

12.1 For purposes of determining compliance with the specified limits for requirements of the properties listed in the following table, an observed value or a calculated value shall be rounded as indicated in accordance with the rounding method of Practice of E 29.

Property	Rounded Unit for Observed or Calculated Value
Chemical composition, hardness, and electrical resistivity	Nearest unit in the last right-hand place of figures of the specified limit
Tensile strength, yield strength	Nearest ksi
Elongation:	
Below 5%	Nearest multiple of 0.5%
5% and over	Nearest 1%
Grain Size:	
Up to 0.055 mm, incl	Nearest multiple of 0.005 mm
Over 0.055 to 0.160 mm, incl	Nearest 0.01 mm

13. Inspection

13.1 The manufacturer shall inspect and make tests necessary to verify that the product furnished conforms to the requirements prescribed in the product specification.

13.2 Source inspection of the material by the purchaser may be agreed upon between the manufacturer, or supplier, and the purchaser as part of the purchase order. In which case, the nature of the facilities needed to satisfy the inspector representing the purchaser that the product is being furnished in accordance with the product specification shall be included in the agreement. All tests and the inspection shall be conducted so as not to interfere unnecessarily with the operations of the works.

13.3 The manufacturer, or supplier, and the purchaser may accomplish the final inspection simultaneously by mutual agreement.

14. Rejection and Rehearing

14.1 *Rejection:*

14.1.1 Product that fails to conform to the requirements of the product specification may be rejected.

14.1.2 Rejection shall be reported to the manufacturer, or supplier, promptly and in writing.

14.1.3 In case of disagreement or dissatisfaction with the results of the test upon which rejection was based, the manufacturer or supplier may make claim for a rehearing.

14.2 *Rehearing:*

14.2.1 As a result of product rejection, the manufacturer or supplier may make claim for retest to be conducted by the manufacturer or supplier and the purchaser. Samples of the rejected product shall be taken in accordance with the product specification and tested by both parties as directed in the product specification, or alternatively, upon agreement by both parties, an independent laboratory may be selected for the tests using the test methods prescribed in the specification.

15. Certification

15.1 The purchaser shall be furnished certification that samples representing each lot have been tested and inspected as directed in the product specification and the requirements have been met.

15.2 Certification is mandatory for product purchased for ASME Boiler and Pressure Code application.

16. Mill Test Report

16.1 When specified in the purchase order or contract, the manufacturer or supplier shall furnish to the purchaser a manufacturer's test report showing the results of the required tests.

17. Packaging and Package Marking

17.1 *Packaging:*

17.1.1 The material shall be separated by size, composition, and temper, and prepared for shipment in such a manner as to ensure acceptance by common carrier for transportation and to afford protection from the normal hazards of transportation.

17.2 *Package Marking:*

17.2.1 Each shipping unit shall be legibly marked with the purchase order number, metal or alloy designation, temper, size, shape, gross and net weight, and name of supplier or manufacturer. The specification number shall be shown when specified.

18. Keywords

18.1 bar, general requirements; general requirements, bar, rod, shapes; rod, general requirements; shape, general requirements

SUPPLEMENTARY REQUIREMENTS

The following supplementary requirements shall apply only when specified by the purchaser in the inquiry, contract, or order for agencies of the U.S. government.

S1. Referenced Documents

S1.1 The following documents of the issue in effect on date of material purchased form a part of this specification to the extent referenced herein:

S1.1.1 *Federal Standards:*

Fed. Std. No. 102 Preservation, Packaging, and Packing Levels

Fed. Std. No. 123 Marking for Shipment (Civil Agencies)

Fed. Std. No. 185 Identification Marking of Copper and Copper-Base Alloy Mill Products

S1.1.2 *Military Standard:*

MIL-STD-129 Marking for Shipment and Storage

S1.1.3 *Military Specification:*

MIL-C-3993 Packaging of Copper and Copper-Base Alloy Mill Products

S2. Quality Assurance

S2.1 *Responsibility for Inspection:*

S2.1.1 Unless otherwise specified in the contract or purchase order, the manufacturer is responsible for the performance of all inspection and test requirements specified. Except as otherwise specified in the contract or purchase order, the manufacturer may use his own or any other suitable facilities for the performance of the inspection and test requirements unless disapproved by the purchaser at the time the order is placed. The purchaser shall have the right to perform any of the inspections or tests set forth when such inspections and tests are deemed necessary to ensure that the material conforms to prescribed requirements.

S3. Identification Marking

S3.1 All material shall be properly marked for identification in accordance with Fed. Std. No. 185, except that the ASTM specification number and the alloy number shall be used.

S4. Preparation for Delivery

S4.1 *Preservation, Packaging, Packing:*

S4.1.1 *Military Agencies* — The material shall be separated by size, composition, grade, or class and shall be preserved and packaged, Level A or C, packed, Level A, B, or C as specified in the contract or purchase order, in accordance with the requirements of MIL-C-3993.

S4.1.2 *Civil Agencies* — The requirements of Fed. Std. No. 102 shall be referenced for definitions of the various levels of packaging protection.

S4.2 *Marking:*

S4.2.1 *Military Agencies* — In addition to any special marking required by the contract or purchase order, marking for shipment shall be in accordance with MIL-STD-129.

S4.2.2 *Civil Agencies* — In addition to any special marking required by the contract or purchase order, marking for shipment shall be in accordance with Fed. Std. No. 123.

APPENDIX

(Nonmandatory Information)

X1. Standard Densities

X1.1 For purposes of calculating weights, cross sections, etc., the densities of the coppers and copper alloys covered by the specifications listed in Section 1 shall be taken as follows:

ASME Designation	Material	Copper Alloy UNS No.	Density (lb/in.^{3})
B 16	free-cutting brass	C36000	0.307
B 21	naval brass	C46200	0.305
		C46400	0.304
		C48200	0.305
		C48500	0.305
B 98	copper-silicon alloy	C65100	0.316
		C65500	0.308
		C65800	0.308
		C66100	0.308
B 124	copper	C11000	0.323
	copper-tellurium	C14500	0.323
	copper-sulfur	C14700	0.323
	forging brass	C37700	0.305
	naval brass	C46400	0.304
	medium leaded naval brass	C48200	0.305
	leaded naval brass	C48500	0.305
	aluminum-bronze	C61900	0.271
	aluminum-bronze, 9%	C62300	0.277
	aluminum-nickel bronze	C63000	0.274
	aluminum-silicon bronze	C64200	0.278
	aluminum-silicon bronze, 6.7%	C64210	0.278
	high-silicon bronze (A)	C65500	0.308
	manganese bronze (A)	C67500	0.302
	nickel silver, 45-10	C77400	0.306
B 133	copper:		
	deoxidized and oxygen-free	...	0.323
	other classifications	...	0.321
B 138	manganese bronze	C67000	0.286
		C67500	0.302
B 139	phosphor bronze	C51000	0.320
		C52100	0.318
		C52400	0.317
		C53400	0.322
		C54400	0.320

(continued)

ASME Designation	Material	Copper Alloy UNS No.	Density (lb/in.^{3})
B 140	leaded red brass	C31400	0.319
		C31600	0.320
		C32000	0.317
B 150	aluminum bronze	C61300	0.285
	aluminum bronze	C61400	0.285
	aluminum bronze	C61900	0.270
	aluminum bronze, 9%	C62300	0.276
	aluminum bronze	C62400	0.269
	aluminum-nickel bronze	C63000	0.274
	aluminum-nickel bronze	C63200	0.276
	aluminum-silicon bronze	C64200	0.278
	aluminum-silicon bronze, 6.7%	C64210	0.278
B 151	copper-nickel-zinc alloy	C70600	0.323
	(nickel silver) and copper-nickel alloy	C71500	0.323
		C72000	0.323
		C74500	0.313
		C75200	0.317
		C75700	0.314
		C76400	0.315
		C77000	0.314
		C79200	0.314
		C79400	0.317
B 196	copper-beryllium alloy	C17000	0.297
		C17200	0.297
		C17300	0.297
B 301	free-cutting copper	C14500	0.323
		C14700	0.323
		C14710	0.323
		C14720	0.323
		C18700	0.323
B 371	copper-zinc-silicon alloy	C69400	0.296
		C69700	0.300
B 411	copper-nickel-silicon alloy	C64700	0.322
B 441	copper-cobalt-beryllium	C17500	0.316
	copper-nickel-beryllium	C17510	0.316
B 453	copper-zinc-lead (leaded brass)	C33500	0.306
		C34000	0.306
		C34500	0.306
		C35000	0.305
		C35300	0.306
		C35600	0.307
B 455	copper-zinc-lead (leaded brass)	C38000	0.305
		C38500	0.306

SPECIFICATION FOR GENERAL REQUIREMENTS FOR WROUGHT SEAMLESS COPPER AND COPPER-ALLOY TUBE

SB-251

(Identical with ASTM Specification B 251-97 for the specifications shown and alloys covered except for the deletion of Supplementary Requirements and editorial differences. Certification has been made mandatory.)

1. Scope

1.1 This specification covers a group of general requirements common to several wrought product specifications. Unless otherwise specified in the purchase order, or in an individual specification, these general requirements shall apply to copper and copper-alloy tube supplied under Specifications B 68, B 75, B 135, B 466, and B 743.

NOTE 1 — A complete metric companion to specification B 251 has been developed — B 251M; therefore, no metric equivalents are presented in this specification.

2. Referenced Documents

2.1 The following documents of the issue in effect on date of material purchase form a part of this specification to the extent referenced herein:

2.2 *ASTM Standards:*

B 68 Specification for Seamless Copper Tube, Bright Annealed
B 75 Specification for Seamless Copper Tube
B 135 Specification for Seamless Brass Tube
B 153 Test Method for Expansion (Pin Test) of Copper and Copper-Alloy Pipe and Tubing
B 154 Method for Mercurous Nitrate Test for Copper and Copper Alloys
B 170 Specification for Oxygen-Free Electrolytic Copper — Refinery Shapes
B 193 Test Method for Resistivity of Electrical Conductor Materials
B 428 Test Method for Angle of Twist in Rectangular and Square Copper and Copper Alloy Tube
B 466 Specification for Seamless Copper-Nickel Pipe and Tube
B 643 Specification for Copper-Beryllium Alloy Seamless Tube
B 743 Specification for Seamless Copper Tube in Coils
E 3 Methods of Preparation of Metallographic Specimens
E 8 Test Methods of Tension Testing of Metallic Materials
E 18 Test Methods for Rockwell Hardness and Rockwell Superficial Hardness of Metallic Materials
E 29 Practice for Using Significant Digits in Test Data to Determine Conformance with Specifications
E 53 Test Methods for Chemical Analysis of Copper
E 55 Practice for Sampling Wrought Nonferrous Metals and Alloys for Determination of Chemical Composition
E 62 Test Methods for Chemical Analysis of Copper and Copper Alloys (Photometric Methods)
E 112 Test Methods for Determining Average Grain Size
E 478 Test Methods for Chemical Analysis of Copper Alloys

3. Terminology

3.1 *Definitions:*

3.1.1 *average diameter (for round tubes only)* — the average of the maximum and minimum outside diameters, or maximum and minimum inside diameters, whichever is applicable, as determined at any one cross section of the tube.

3.1.2 *coil* — a length of the product wound into a series of connected turns. The unqualified term "coil" as applied to tube usually refers to a bunched coil.

3.1.2.1 *bunched* — a coil in which the turns are bunched and held together such that the cross section of the bunched turns is approximately circular.

3.1.2.2 *double layer flat* — a coil in which the product is spirally wound into two connected disk-like layers such that one layer is on top of the other. (Sometimes called "double layer pancake coil" or "double layer spirally wound coil.")

3.1.2.3 *level or traverse wound* — a coil in which the turns are wound into layers parallel to the axis of the coil such that successive turns in a given layer are next to one another. (Sometimes called "helical coil.")

3.1.2.4 *level or traverse wound on a reel or spool* — a coil in which the turns are positioned into layers on a reel or spool parallel to the axis of the reel or spool such that successive turns in a given layer are next to one another.

3.1.2.5 *single layer flat* — a coil in which the product is spirally wound into a single disk-like layer. (Sometimes called "pancake coil" or "single layer spirally wound coil.")

3.1.2.6 *stagger wound* — a coil in which the turns are positioned into layers approximately parallel to the axis of the coil, but not necessarily with the fixed regularity of a level or traverse wound coil.

3.1.3 *lengths* — straight pieces of the product.

3.1.3.1 *ends* — straight pieces, shorter than the nominal length, left over after cutting the product into mill lengths, stock lengths, or specific lengths. They are subject to minimum length and maximum weight requirements.

3.1.3.2 *mill* — straight lengths, including ends, that are conveniently manufactured in the mills. Full-length pieces are usually 10, 12, or 20 ft and subject to established length tolerances.

3.1.3.3 *multiple* — straight lengths of integral multiples of a base length, with suitable allowance for cutting, if and when specified.

3.1.3.4 *random* — run of mill lengths without any indicated preferred length.

3.1.3.5 *specific* — straight lengths that are uniform in length, as specified, and subject to established length tolerances.

3.1.3.6 *specific with ends* — specific lengths, including ends.

3.1.3.7 *standard* — uniform lengths recommended in a Simplified Practice Recommendation or established as a Commercial Standard.

3.1.3.8 *stock* — straight lengths that are mill cut and stored in advance of orders. They are usually 10, 12, or 20 ft and subject to established length tolerances.

3.1.3.9 *stock with ends* — stock lengths, including ends.

3.1.4 *reel or spool* — a cylindrical device that has a rim at each end and an axial hole for a shaft or spindle, and on which the product is wound to facilitate handling and shipping.

3.1.5 *tube* — a hollow product of round or any other cross section, having a continuous periphery.

3.1.5.1 *tube, automotive and general service* — a seamless copper tube of small diameter conforming to a standard series of sizes commercially known as Automotive and General Service Tube.

3.1.5.2 *tube, seamless* — a tube produced with a continuous periphery in all stages of the operations.

4. Materials and Manufacture

4.1 The material shall be of such quality and purity that the finished product shall have the properties and characteristics prescribed in the applicable product specification listed in Section 1.

4.2 The material shall be produced by either hot or cold working operations, or both. It shall be finished, unless otherwise specified, by such cold working and annealing or heat treatment as necessary to meet the properties specified.

5. Dimensions and Permissible Variations

5.1 *General:*

5.1.1 The standard method of specifying wall thickness shall be in decimal fractions of an inch.

5.1.2 For the purpose of determining conformance with the dimensional requirements prescribed in this specification, any measured value outside the specified limiting values for any dimension may be cause for rejection.

5.1.3 Tolerances on a given tube may be specified with respect to any two, but not all three, of the following: outside diameter, inside diameter, wall thickness.

5.1.4 When round tube is ordered by outside and inside diameters, the maximum plus and minus deviation of the wall thickness from the nominal at any point shall not exceed the values given in Table 1 by more than 50 %.

NOTE 2 — Blank spaces in the tolerance tables indicate either that the material is not generally available or that no tolerances have been established.

TABLE 1
WALL THICKNESS TOLERANCES FOR COPPER AND COPPER-ALLOY TUBE
(Applicable to Specifications B 68, B 75, B 135, and B 743)

	Outside Diameter, in.[A]						
Wall Thickness, in.	1/32 to 1/8, incl	Over 1/8 to 5/8, incl	Over 5/8 to 1, incl	Over 1 to 2, incl	Over 2 to 4, incl	Over 4 to 7, incl	Over 7 to 10, incl
Up to 0.017, incl	0.002	0.001	0.0015	0.002	...	...	...
Over 0.017-0.024, incl	0.003	0.002	0.002	0.0025	...	...	...
Over 0.024-0.034, incl	0.003	0.0025	0.0025	0.003	0.004	...	...
Over 0.034-0.057, incl	0.003	0.003	0.0035	0.0035	0.005	0.007	...
Over 0.057-0.082, incl	...	0.0035	0.004	0.004	0.006	0.008	0.010
Over 0.082-0.119, incl	...	0.004	0.005	0.005	0.007	0.009	0.011
Over 0.119-0.164, incl	...	0.005	0.006	0.006	0.008	0.010	0.012
Over 0.164-0.219, incl	...	0.007	0.009	0.009	0.011	0.012	0.014
Over 0.219-0.283, incl	...	...	0.011	0.012	0.014	0.015	0.016
Over 0.283-0.379, incl	...	...	0.014	6[B] %	6[B] %	7[B] %	7[B] %
Over 0.379	...	...	...	6[B] %	6[B] %	7[B] %	7[B] %

NOTE — *Maximum deviation at any point:* The above tolerances are plus and minus; if tolerances all plus or all minus are desired, double the values given.

[A] when round tube is ordered by outside and inside diameters, the maximum plus and minus deviation of the wall thickness from the nominal at any point shall not exceed the values given in the table by more than 50 percent.

[B] Percent of specified wall expressed to the nearest 0.001 in.

5.2 *Wall Thickness Tolerances for Copper and Copper-Alloy Tube* — Wall thickness tolerances applicable to Specifications B 68, B 75, B 135, and B 743 for round tubes only shall be in accordance with Table 1. Wall thickness tolerances for rectangular including square tube applicable to B 75 and B 135 shall be in accordance with Table 2.

5.3 *Diameter or Distance between Parallel Surfaces, Tolerances for Copper and Copper-Alloy Tube* — Diameter tolerances applicable to Specifications B 68, B 75, B 135, and B 743 for round tubes only shall be in accordance with Table 3. Tolerances on distance between parallel surfaces for rectangular including square tube applicable to Specifications B 75 and B 135 shall be in accordance with Table 4.

5.4 *Roundness (Applicable to Specifications B 75, B 135, and B 466)* — For drawn unannealed tube in straight lengths, the roundness tolerances shall be as follows:

t/D (Ratio of Wall Thickness to Outside Diameter)	Roundness Tolerance as Percent of Outside Diameter (Expressed to the Nearest 0.001 in.)
0.01–0.03, incl.	1.5
Over 0.03–0.05, incl.	1.0
Over 0.05–0.10, incl.	0.8 or 0.002 in., whichever is greater
Over 0.10	0.7 or 0.002 in., whichever is greater

5.4.1 Compliance with the roundness tolerances shall be determined by taking measurements on the outside diameter only, irrespective of the manner in which the tube dimensions are specified. The deviation from roundness is measured as the difference between major and minor diameters as determined at any one cross section of the tube. The major and minor diameters are the diameters of two concentric circles just enclosing the outside surface of the tube at the cross section.

5.4.2 No tolerances have been established for as-extruded tube, redraw tube, annealed tube, any tube furnished in coils or drawn tube whose wall thickness is under 0.016 in.

5.5 *Length Tolerances:*

5.5.1 *Straight Lengths* — Length tolerances, straight lengths, applicable to Specifications B 68, B 75, B 135, and B 466 shall be in accordance with Table 5.

5.5.2 *Schedule of Tube Lengths* — Specific and stock lengths of tube with ends, applicable to Specifications B 68, B 75, B 135, and B 466, shall be in accordance with Table 6. Tube in straight lengths shall be furnished in stock lengths with ends, unless the order requires specific lengths or specific lengths with ends.

5.6 *Squareness of Cut (Applicable to Specifications B 68, B 75, B 135, and B 466)* — For tube in straight lengths, the departure from squareness of the end of any tube shall not exceed the following:

TABLE 2
WALL THICKNESS TOLERANCES FOR COPPER AND COPPER-ALLOY RECTANGULAR AND SQUARE TUBE
(Applicable to Specifications B 75, B 135, and B 743)

Wall Thickness, in.	Distance Between Outside Parallel Surface, in.[A]						
	1/32 to 1/8, incl	Over 1/8 to 5/8, incl	Over 5/8 to 1, incl	Over 1 to 2, incl	Over 2 to 4, incl	Over 4 to 7, incl	Over 7 to 10, incl
Up to 0.017, incl	0.002	0.002	0.0025	0.003	...	...	...
Over 0.017–0.024, incl	0.003	0.0025	0.003	0.0035	...	...	...
Over 0.024–0.034, incl	0.0035	0.0035	0.0035	0.004	0.006	...	...
Over 0.034–0.057, incl	0.004	0.004	0.0045	0.005	0.007	0.009	...
Over 0.057–0.082, incl	...	0.005	0.006	0.007	0.008	0.010	0.012
Over 0.082–0.119, incl	...	0.007	0.008	0.009	0.010	0.012	0.014
Over 0.119–0.164, incl	...	0.009	0.010	0.011	0.012	0.014	0.016
Over 0.164–0.219, incl	...	0.011	0.012	0.013	0.015	0.017	0.019
Over 0.219–0.283, incl	...	...	0.015	0.016	0.018	0.020	0.022

NOTE — *Maximum deviation at any point:* The above tolerances are plus and minus; if tolerances all plus or all minus are desired, double the values given.

[A] In the case of rectangular tube the major dimension determines the thickness tolerance applicable to all walls.

TABLE 3
AVERAGE DIAMETER TOLERANCES FOR COPPER AND COPPER-ALLOY TUBE[A]
(Applicable to Specifications B 68, B 75, B 135, and B 743)

Specified Diameter, in.	Tolerances, Plus and Minus, in.
Up to 1/8, incl	0.002
Over 1/8–5/8, incl	0.002
Over 5/8–1, incl	0.0025
Over 1–2, incl	0.003
Over 2–3, incl	0.004
Over 3–4, incl	0.005
Over 4–5, incl	0.006
Over 5–6, incl	0.007
Over 6–8, incl	0.008
Over 8–10, incl	0.010

[A] Applicable to inside or outside diameter.

5.6.1 *Round Tube:*

Specified Outside Diameter, in.	Tolerance
Up to 5/8, incl.	0.010 in.
Over 5/8	0.016 in./in. of diameter

5.6.2 *Rectangular and Square Tube:*

Specified Distance Between Major Outside Parallel Surfaces, in.	Tolerance
Up to 5/8, incl.	0.016 in.
Over 5/8	0.025 in./in. of distance between outside parallel surfaces

5.7 *Straightness Tolerances:*

5.7.1 *Round Tubes* — For round tubes of any drawn temper, 1/4 to 3 1/2 in. in outside diameter, inclusive, but not redraw tube, extruded tube, or any annealed tube, the straightness tolerances applicable to Specifications B 75, B 135, and B 466 shall be in accordance with Table 7.

5.7.2 *Rectangular and Square Tubes* — For rectangular and square tubes of any drawn temper, the straightness tolerances applicable to Specifications B 75 and B 135 shall be 1/2 in. maximum curvature (depth of arc) in any 6-ft portion of the total length. (Not applicable to extruded tube, redraw tube, or any annealed tube.)

5.8 *Corner Radius, Rectangular and Square Tubes* — The permissible radii for commercially square corners applicable to Specifications B 75 and B 135 shall be in accordance with Table 8.

5.9 *Twist Tolerances, Rectangular and Square Tubes* — The maximum twist about the longitudinal axis of drawn temper rectangular and square tubes applicable to Specifications B 75 and B 135 shall not exceed 1°/ft of length, measured to the nearest degree, and the total angle of twist shall not exceed 20° when measured in accordance with Test Method B 428. The requirement is not applicable to tubes in the annealed temper or to tubes whose specified major dimension is less than 1/2 in.

6. Workmanship, Finish, and Appearance

6.1 The material shall be free of defects of a nature that interfere with normal commercial applications. It shall be well cleaned and free of dirt.

TABLE 4
TOLERANCES ON DISTANCE BETWEEN PARALLEL SURFACES FOR COPPER AND COPPER-ALLOY RECTANGULAR AND SQUARE TUBE
(Applicable to Specifications B 75, B 135, and B 743)

Dimension *a* or *b* (see sketches), in.	Tolerances, in.
Up to 1/8, incl	0.003
Over 1/8–5/8, incl	0.004
Over 5/8–1, incl	0.005
Over 1–2, incl	0.006
Over 2–3, incl	0.007
Over 3–4, incl	0.008
Over 4–5, incl	0.009
Over 5–6, incl	0.010
Over 6–8, incl	0.011
Over 8–10, incl	0.012

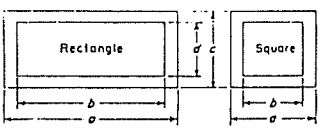

NOTE — The following tolerances are plus and minus; if tolerances all plus or all minus are desired, double the values given.

Nominal dimension *a* determines tolerance applicable to both *a* and *c*.
Nominal dimension *b* determines tolerance applicable to both *b* and *d*.

TABLE 5
LENGTH TOLERANCES FOR COPPER AND COPPER-ALLOY TUBE, STRAIGHT LENGTHS
(Applicable to Specifications B 68, B 75, B 135, and B 466)

Length	Tolerances, in. Applicable Only to Full-Length Pieces		
	For Major Outside Dimensions Up to 1 in., incl	For Major Outside Dimensions Over 1 to 4 in., incl	For Major Outside Dimensions Over 4 in.
Specific lengths:			
Up to 6 in., incl	1/32	1/16	...
Over 6 in.–2 ft, incl	1/16	3/32	1/8
Over 2–6 ft, incl	3/32	1/8	1/4
Over 6–14 ft, incl	1/4	1/4	1/4
Over 14 ft	1/2	1/2	1/2
Specific lengths with ends	1	1	1
Stock lengths with or without ends	1 [A]	1 [A]	1 [A]

NOTE 1 — Tolerances are all plus; if all minus tolerances are desired, use the same values; if tolerances plus and minus are desired, halve the values given.

[A] As stock lengths are cut and placed in stock in advance of orders, departure from this tolerance is not practicable.

TABLE 6
SCHEDULE OF TUBE LENGTHS (SPECIFIC AND STOCK) WITH ENDS FOR COPPER AND COPPER-ALLOY TUBE
(Applicable to Specifications B 68, B 75, B 135, and B 466)

Major Outside Dimensions, in.	Specific Length, ft	Shortest Permissible Length,[A] Percent of Specific Length	Maximum Permissible Weight of Ends, Percent of Lot Weight
Up to 1, incl	6–20, incl	70	20
Over 1–2, incl	6–20, incl	60	25
Over 2–3, incl	6–20, incl	55	30
Over 3–4, incl	6–20, incl	50	40

[A] Expressed to the nearest 1/2 ft.

7. Sampling

7.1 *Sampling* — The lot, size, portion size, and selection of sample pieces shall be as follows:

7.1.1 *Lot Size* — For tube, the lot size shall be 10 000 lb or fraction thereof.

7.1.2 *Portion Size* — Sample pieces shall be taken for test purposes from each lot according to the following schedule:

Number of Pieces in Lot	Number of Sample Pieces to be Taken[A]
1–50	1
51–200	2
201–1500	3
Over 1500	0.2% of toal number of pieces in the lot, but not to exceed 10 sample pieces

[A] Each sample piece shall be taken from a separate tube.

TABLE 7
STRAIGHTNESS TOLERANCES FOR COPPER AND COPPER-ALLOY TUBE[A] IN ANY DRAWN TEMPER
(Applicable to Specifications B 75, B 135, B 466, and B 643)

Length, ft[B]	Maximum Curvature (Depth of Arc), in.
Over 3–6, incl	3/16
Over 6–8, incl	5/16
Over 8–10, incl	1/2

NOTE 1 — Applies to round tube in any drawn temper from 1/4 (6.35) to 3 1/2 in. (88.9 mm), incl, in outside diameter.

[A] Not applicable to pipe, redraw tube, extruded tube or any annealed tube.

[B] For lengths greater than 10 ft the maximum curvature shall not exceed 1/2 in. in any 10-ft portion of the total length.

TABLE 8
PERMISSIBLE RADII FOR COMMERCIALLY SQUARE CORNERS FOR COPPER AND COPPER-ALLOY RECTANGULAR AND SQUARE TUBE
(Applicable to Specifications B 75, B 135, and B 743)

	Maximum Radii, in.	
Wall Thickness, in.	Outside Corners	Inside Corners
Up to 0.058, incl	3/64	1/32
Over 0.058-0.120, incl	1/16	1/32
Over 0.120-0.250, incl	3/32	1/32
Over 0.250	None established	None established

8. Number of Tests and Retests

8.1 *Chemical Analysis* — Samples for chemical analysis shall be taken in accordance with Practice E 55. Drillings, millings, etc., shall be taken in approximately equal weight from each of the sample pieces selected in accordance with 7.1.2 and combined into one composite sample. The minimum weight of the composite sample that is to be divided into three equal parts shall be 150 g.

8.1.1 Instead of sampling in accordance with Practice E 55, the manufacturer shall have the option of determining conformance to chemical composition as follows: Conformance shall be determined by the manufacturer by analyzing samples taken at the time the castings are poured or samples taken from the semi-finished product. If the manufacturer determines the chemical composition of the material during the course of manufacture, he shall not be required to sample and analyze the finished product. The number of samples taken for determination of chemical composition shall be as follows:

8.1.1.1 When samples are taken at the time the castings are poured, at least one sample shall be taken for each group of castings poured simultaneously from the same source of molten metal.

8.1.1.2 When samples are taken from the semi-finished product, a sample shall be taken to represent each 10 000 lb or fraction thereof, except that not more than one sample shall be required per piece.

8.1.1.3 Due to the discontinuous nature of the processing of castings into wrought products, it is not practical to identify specific casting analysis with a specific quantity of finished material.

8.1.1.4 In the event that heat identification or traceability is required, the purchaser shall specify the details desired.

8.2 *Other Tests* — For other tests, unless otherwise provided in the product specification, test specimens shall be taken from two of the sample pieces selected in accordance with 7.1.2.

8.2.1 In the case of tube furnished in coils, a length sufficient for all necessary tests shall be cut from each coil selected for purpose of tests. The remaining portion of these coils shall be included in the shipment, and the permissible variations in length on such coils shall be waived.

8.3 *Retests:*

8.3.1 If any specimen shows defective machining or develops flaws, it may be discarded and another specimen substituted.

8.3.2 If the percentage elongation of any tension test specimen is less than that specified and any part of the fracture is outside the middle two thirds of the gage length or in a punched or scribed mark within the reduced section, a retest on an additional specimen either from the same sample piece or from a new sample piece shall be allowed.

8.3.3 If the results of the test on one of the specimens fail to meet the specified requirements, two additional specimens shall be taken from different sample pieces and tested. The results of the test on both of these specimens shall meet the specified requirements. Failure of more than one specimen to meet the specified requirements for a particular property shall be cause for rejection of the entire lot.

8.3.4 If the chemical analysis fails to conform to the specified limits, analysis shall be made on a new composite sample prepared from additional pieces selected in accordance with 7.1.2. The results of this retest shall comply with the specified requirements.

9. Test Specimens

9.1 Tension test specimens shall be of the full section of the tube and shall conform to the requirements of Test specimens section of Test Methods E 8, unless the limitations of the testing machine preclude the use of such a specimen. Test specimens conforming to Type No. 1 of Fig. 13, Tension Test Specimens for Large-Diameter Tubular Products, of Test Methods E 8 shall be used when a full-section specimen cannot be tested.

9.2 Whenever tension test results are obtained from both full size and from machined test specimens and they differ, the results obtained from full-size test specimens shall be used to determine conformance to the specification requirements.

9.3 Tension test results on material covered by this specification are not seriously affected by variations in speed of testing. A considerable range of testing speed is permissible; however, the rate of stressing to the yield strength shall not exceed 100 ksi/min. Above the yield strength the movement per minute of the testing machine head under load shall not exceed 0.5 in/in. of gage length (or distance between grips for full-section specimens).

9.4 The surface of the test specimen for microscopical examination shall approximate a radial longitudinal section of round tube and a longitudinal section of rectangular and square tube perpendicular to, and bisecting, the major dimensional surface.

10. Test Methods

10.1 The properties enumerated in the specifications listed in Section 1 shall, in case of disagreement, be determined in accordance with the following applicable test methods:

Test	ASTM Designation
Chemical analysis	B 170,[A] E 53, E 62, E 478
Tension	E 8
Rockwell hardness	E 18[B]
Grain size	E 3, E 112
Expansion (pin test)	B 153
Mercurous nitrate test	B 154
Electrical resistivity	B 193

[A] Reference to Specification B 170 is to the suggested chemical methods in the annex thereof. When Committee E-1 has tested and published methods for assaying the low-level impurities in copper, the Specification B 170 annex will be eliminated.

[B] The value for the Rockwell Hardness number of each specimen shall be established by taking the arithmetical average of at least three readings.

11. Significance of Numerical Limits

11.1 For purposes of determining compliance with the specified limits for requirements of the properties listed in the following table, an observed value or a calculated value shall be rounded as indicated in accordance with the rounding method of Practice E 29:

Property	Rounded Unit for Observed or Calculated Value
Chemical composition	nearest unit in the last right-hand place of figures of the specified limit
Hardness	
Electrical resistivity	
Tensile strength	nearest ksi
Yield strength	nearest ksi
Elongation	nearest 1%
Grain size:	
Up to 0.055 mm, incl	nearest multiple of 0.005 mm
Over 0.055–0.160 mm, incl	nearest 0.01 mm

12. Inspection

12.1 The manufacturer shall afford the inspector representing the purchaser, all reasonable facilities, without charge, to satisfy him that the material is being furnished in accordance with the specified requirements.

13. Rejection and Rehearing

13.1 Material that fails to conform to the requirements of this specification shall be rejected. Rejection shall be reported to the manufacturer or supplier promptly and in writing. In case of dissatisfaction with the results of the test, the manufacturer or supplier is permitted to make claim for a rehearing.

14. Certification

14.1 The manufacturer shall furnish to the purchaser a certificate stating that each lot has been sampled, tested,

and inspected in accordance with this specification and has met the requirements.

15. Packaging and Package Marking

15.1 The material shall be separated by size, composition, and temper, and prepared for shipment in such a manner as to ensure acceptance by common carrier for transportation and to afford protection from the normal hazards of transportation.

15.2 Each shipping unit shall be legibly marked with the purchase order number, metal or alloy designation, temper, size, shape, gross and net weight, and name of supplier. The specification number shall be shown, when specified.

16. Mill Test Report

16.1 When specified on the purchase order, the manufacturer shall furnish to the purchaser a test report showing results of tests required by the specification.

APPENDIX

(Nonmandatory Information)

X1. STANDARD DENSITIES

X1.1 For purposes of calculating weights, cross sections, etc., the densities of the copper and copper alloys covered by the specifications listed in Section 1 shall be taken as in Table X1.1.

TABLE X1.1
DENSITIES

ASME Designation	Material	Copper or Copper Alloy UNS No.	Density, lb/in.^{3}
B 68	copper	C10100	0.323
B 75	copper	C10200	0.323
B 743	copper	C10300	0.323
		C10800	0.323
		C12000	0.323
		C12200	0.323
(B 75 only)		C14200	0.323
B 135	brass	C22000	0.318
		C23000	0.316
		C26000	0.308
		C27000	0.306
		C27200	0.305
		C28000	0.303
		C33000	0.307
		C33200	0.308
		C37000	0.304
		C44300	0.308
B 466	copper nickel	C70400	0.323
		C70600	0.323
		C71000	0.323
		C71500	0.323
		C72200	0.323

SPECIFICATION FOR TITANIUM AND TITANIUM ALLOY STRIP, SHEET, AND PLATE

SB-265

(Identical with ASTM Specification B 265-99 for all grades except for section 15.1, which requires mandatory certification.)

1. Scope

1.1 This specification covers annealed titanium and titanium alloy strip, sheet, and plate as follows:

1.1.1 *Grade 1* — Unalloyed titanium,

1.1.2 *Grade 2* — Unalloyed titanium,

1.1.3 *Grade 3* — Unalloyed titanium,

1.1.4 *Grade 4* — Unalloyed titanium,

1.1.5 *Grade 5* — Titanium alloy (6% aluminum, 4% vanadium),

1.1.6 *Grade 6* — Titanium alloy (5% aluminum, 2.5% tin),

1.1.7 *Grade 7* — Unalloyed titanium plus 0.12 to 0.25% palladium,

1.1.8 *Grade 9* — Titanium alloy (3.0% aluminum, 2.5% vanadium),

1.1.9 *Grade 11* — Unalloyed titanium plus 0.12 to 0.25% palladium,

1.1.10 *Grade 12* — Titanium alloy (0.3% molybdenum, 0.8% nickel),

1.1.11 *Grade 13* — Titanium alloy (0.5% nickel, 0.05% ruthenium),

1.1.12 *Grade 14* — Titanium alloy (0.5% nickel, 0.05% ruthenium),

1.1.13 *Grade 15* — Titanium alloy (0.5% nickel, 0.05% ruthenium),

1.1.14 *Grade 16* — Unalloyed titanium plus 0.04 to 0.08% palladium,

1.1.15 *Grade 17* — Unalloyed titanium plus 0.04 to 0.08% palladium,

1.1.16 *Grade 18* — Titanium alloy (3% aluminum, 2.5% vanadium) plus 0.04 to 0.08% palladium,

1.1.17 *Grade 19* — Titanium alloy (3% aluminum, 8% vanadium, 6% chromium, 4% zirconium, 4% molybdenum),

1.1.18 *Grade 20* — Titanium alloy (3% aluminum, 8% vanadium, 6% chromium, 4% zirconium, 4% molybdenum) plus 0.04% to 0.08% palladium,

1.1.19 *Grade 21* — Titanium alloy (15% molybdenum, 3% aluminum, 2.7% niobium, 0.25% silicon),

1.1.20 *Grade 23* — Titanium alloy (6% aluminum, 4% vanadium with extra low interstitial elements, ELI),

1.1.21 *Grade 24* — Titanium alloy (6% aluminum, 4% vanadium) plus 0.04% to 0.08% palladium,

1.1.22 *Grade 25* — Titanium alloy (6% aluminum, 4% vanadium) plus 0.3 to 0.8% nickel and 0.04% to 0.08% palladium,

1.1.23 *Grade 26* — Unalloyed titanium plus 0.08 to 0.14% ruthenium,

1.1.24 *Grade 27* — Unalloyed titanium plus 0.08 to 0.14% ruthenium,

1.1.25 *Grade 28* — Titanium alloy (3% aluminum, 2.5% vanadium) plus 0.08 to 0.14% ruthenium,

1.1.26 *Grade 29* — Titanium alloy (6% aluminum, 4% vanadium with extra low interstitial elements, ELI), plus 0.08 to 0.14% ruthenium,

1.1.27 *Grade 30* — Titanium alloy (0.3% cobalt, 0.05% palladium),

1.1.28 *Grade 31* — Titanium alloy (0.3% cobalt, 0.05% palladium)

1.1.29 *Grade 32* — Titanium alloy (5% aluminum, 1% tin, 1% zirconium, 1% vanadium, 0.8% molybdenum).

1.1.30 *Grade 33* — Titanium alloy (0.4% nickel, 0.015% palladium, 0.025% ruthenium, 0.15% chromium), and

1.1.31 *Grade 34* — Titanium alloy (0.4% nickel, 0.015% palladium, 0.025% ruthenium, 0.15% chromium).

1.2 The values stated in inch–pound units are to be regarded as the standard. The values given in parentheses are for information only.

2. Referenced Documents

2.1 *ASTM Standards:*

E 8 Test Methods for Tension Testing of Metallic Materials

E 29 Practice for Using Significant Digits in Test Data to Determine Conformance With Specifications

E 120 Test Methods for Chemical Analysis of Titanium and Titanium Alloys

E 190 Test Method for Guided Bend Test for Ductility of Welds

E 1409 Test Method for Determination of Oxygen in Titanium and Titanium Alloys by the Inert Gas Fusion Technique

E 1447 Test Method for the Determination of Hydrogen in Titanium and Titanium Alloys by the Inert Gas Fusion Thermal Conductivity Method

3. Terminology

3.1 *Description of Terms Specific to This Standard:*

3.1.1 Any product 0.187 in. (4.75 mm) and under in thickness and less than 24 in. (610 mm) in width is classified as strip; products 0.187 in. (4.75 mm) and under in thickness and 24 in. (610 mm) or more in width are classified as sheet; any product over 0.187 in. (4.75 mm) in thickness and over 10 in. (254 mm) in width is classified as plate.

4. Ordering Information

4.1 Orders for materials under this specification shall include the following information as applicable:

4.1.1 Grade number (Section 1),

4.1.2 Product limitations (Section 3),

4.1.3 Special mechanical properties (Table 1)

4.1.4 Marking (Section 16),

4.1.5 Finish (Section 8),

4.1.6 Packaging (Section 16),

4.1.7 Required reports (Section 15), and

4.1.8 Disposition of rejected material (Section 14).

5. Chemical Composition

5.1 The grades of titanium and titanium alloy metal covered by this specification shall conform to the chemical composition requirements prescribed in Table 2.

5.1.1 The elements listed in Table 2 are intentional alloy additions or elements that are inherent to the manufacture of titanium sponge, ingot, or mill product.

5.1.1.1 Elements other than those listed in Table 2 are deemed to be capable of occurring in the grades listed in Table 2 by and only by way of unregulated or unanalyzed scrap additions to the ingot melt. Therefore, product analysis for elements not listed in Table 2 shall not be required unless specified and shall be considered to be in excess of the intent of this specification.

5.1.2 Elements intentionally added to the melt must be identified, analyzed, and reported in the chemical analysis.

5.2 When agreed upon by producer and purchaser and requested by the purchaser in his written purchase order, chemical analysis shall be completed for specific residual elements not listed in this specification.

5.3 *Product Analysis* — Product analysis tolerances do not broaden the specified heat analysis requirements but cover variations between laboratories in the measurement of chemical content. The manufacturer shall not ship material that is outside the limits specified in Table 2 for the applicable grade. Product analysis limits shall be as specified in Table 3.

5.4 At least two samples for chemical analysis shall be tested to determine chemical composition. Samples shall be taken from the ingot or the extremes of the product to be analyzed.

6. Mechanical Properties

6.1 Material supplied under this specification shall conform to the mechanical property requirements given in Table 1 for the grade specified.

6.2 Tension testing specimens are to be machined and tested in accordance with Test Methods E 8. Tensile properties shall be determined using a strain rate of 0.003 to 0.007 in./in./min through the specified yield strength, and then increasing the rate so as to produce failure in approximately one additional minute.

6.3 For sheet and strip, the bend test specimen shall stand being bent cold through an angle of 105° without fracture in the outside of the bent portion. The bend shall be made on a diameter equal to that shown in Table 1 for the applicable grade.

TABLE 1
TENSILE REQUIREMENTS[A]

Grade	Tensile Strength, Min. ksi	Tensile Strength, Min. MPa	Yield Strength, 0.2% Offset Min. ksi	Yield Strength, 0.2% Offset Min. MPa	Yield Strength, 0.2% Offset Max. ksi	Yield Strength, 0.2% Offset Max. MPa	Elongation in 2 in. or 50 mm, Min., %	Bend Test[B] Under 0.070 in. (1.8 mm) in Thickness	Bend Test[B] 0.070 to 0.187 in. (1.8 to 4.75 mm) in Thickness
1	35	240	25	170	45	310	24	3T	4T
2	50	345	40	275	65	450	20	4T	5T
3	65	450	55	380	80	550	18	4T	5T
4	80	550	70	483	95	655	15	5T	6T
5	130	895	120	828	...	...	10[C]	9T	10T
6	120	828	115	793	...	...	10[C]	8T	9T
7	50	345	40	275	65	450	20	4T	5T
9	90	620	70	483	...	...	15[C]	5T	6T
11	35	240	25	170	45	310	24	3T	4T
12	70	483	50	345	...	...	18	4T	5T
13	40	275	25	170	...	...	24	3T	4T
14	60	410	40	275	...	...	20	4T	5T
15	70	483	55	380	...	...	18	4T	5T
16	50	345	40	275	65	450	20	4T	5T
17	35	240	25	170	45	310	24	3T	4T
18	90	620	70	483	...	...	15[D]	5T	6T
19[E, F]	115	793	110	759	...	...	15	6T	6T
20[E, F]	115	793	110	759	...	...	15	6T	6T
21[E, F]	115	793	110	759	...	...	15	6T	6T
23[E, F]	120	828	110	759	...	...	10	9T	10T
24	130	895	120	828	...	...	10		
25	130	895	120	828	...	...	10		
26	50	345	40	275	65	450	20	4T	5T
27	35	240	25	170	45	310	24	3T	4T
28	90	620	70	483	...	...	15	5T	6T
29	120	828	110	759	...	...	10	9T	10T
30	50	345	40	275	65	450	20	4T	5T
31	65	450	55	380	80	550	18	4T	5T
32	100	689	85	586	...	...	10[C]	7T	9T
33	50	345	40	275	65	450	20	4T	5T
34	65	450	55	380	80	550	18	4T	5T

[A] Minimum and maximum limits apply to tests taken both longitudinal and transverse to the direction of rolling. Mechanical properties for conditions other than annealed or plate thickness over 1 in. (25 mm) may be established by agreement between the manufacturer and the purchaser.

[B] *T* equals the thickness of the bend test specimen. Bend tests are not applicable to material over 0.187 in. (4.75 mm) in thickness.

[C] For Grades 5, 6, and 32 the elongation on materials under 0.025 in. (0.635 mm) in thickness may be obtained only by negotiation.

[D] Elongation for continuous rolled and annealed (strip product from coil) for Grade 9 and Grade 18 shall be 12% minimum in the longitudinal direction and 8% minimum in the transverse direction.

[E] Properties for material in the solution treated condition.

[F] Material is normally purchased in the solution treated condition. Therefore, properties for aged material shall be negotiated between manufacturer and purchaser.

7. Permissible Variations in Dimensions

7.1 Dimensional tolerances on titanium and titanium alloy material covered by this specification shall be as specified in Tables 4 through 13, as applicable.

8. Finish

8.1 Titanium and titanium alloy sheet, strip, and plate shall be free of injurious external and internal imperfections of a nature that will interfere with the purpose for which it is intended. Annealed material may be furnished as descaled, as sandblasted, or as ground, or both sandblasted and ground. If shipped as descaled, sandblasted, or ground, the manufacturer shall be permitted to remove minor surface imperfections by spot grinding if such grinding does not reduce the thickness of the material below the minimum permitted by the tolerance for the thickness ordered.

TABLE 2
CHEMICAL REQUIREMENTS [A]

Element	Composition, %										
	Grade										
	1	2	3	4	5	6	7	9	11	12	13
Nitrogen, max	0.03	0.03	0.05	0.05	0.05	0.03	0.03	0.03	0.03	0.03	0.03
Carbon, max	0.08	0.08	0.08	0.08	0.08	0.08	0.08	0.08	0.08	0.08	0.08
Hydrogen, max[B, C]	0.015	0.015	0.015	0.015	0.015	0.015	0.015	0.015	0.015	0.015	0.015
Iron, max	0.20	0.30	0.30	0.50	0.40	0.50	0.30	0.25	0.20	0.30	0.20
Oxygen, max	0.18	0.25	0.35	0.40	0.20	0.20	0.25	0.15	0.18	0.25	0.10
Aluminum	...	...	...	...	5.5–6.75	4.0–6.0	...	2.5–3.5	...	...	...
Vanadium	...	...	...	...	3.5–4.5	...	...	2.0–3.0	...	...	...
Tin	...	...	...	...	...	2.0–3.0	...	...	...	...	...
Ruthenium	...	...	...	...	...	...	...	...	...	...	0.04–0.06
Palladium	...	...	...	...	...	...	0.12–0.25	...	0.12–0.25	...	...
Cobalt	...	...	...	...	...	...	...	...	...	...	...
Molybdenum	...	...	...	...	...	...	...	...	...	0.2–0.4	...
Chromium	...	...	...	...	...	...	...	...	...	...	...
Nickel	...	...	...	...	...	...	...	...	...	0.6–0.9	0.04–0.06
Niobium	...	...	...	...	...	...	...	...	...	...	...
Zirconium	...	...	...	...	...	...	...	...	...	...	...
Silicon	...	...	...	...	...	...	...	...	...	...	...
Residuals, max (each)[D, E, F]	0.1	0.1	0.1	0.1	0.1	0.1	0.1	0.1	0.1	0.1	0.1
Residuals, max (total)[D, E, F]	0.4	0.4	0.4	0.4	0.4	0.4	0.4	0.4	0.4	0.4	0.4
Titanium[G]	Balance	Balance	Balance	Balance	Balance	Balance	Balance	Balance	Balance	Balance	Balance

(continued)

TABLE 2
CHEMICAL REQUIREMENTS[A] (CONT'D)

	Composition, %										
	Grade										
Element	14	15	16	17	18	19	20	21	23	24	25
Nitrogen, max	0.03	0.05	0.03	0.03	0.03	0.03	0.03	0.03	0.03	0.05	0.05
Carbon, max	0.08	0.08	0.08	0.08	0.08	0.05	0.05	0.05	0.08	0.08	0.08
Hydrogen, max[B, C]	0.015	0.015	0.015	0.015	0.015	0.02	0.02	0.015	0.0125	0.015	0.0125
Iron, max	0.30	0.30	0.30	0.20	0.25	0.30	0.30	0.40	0.25	0.40	0.40
Oxygen, max	0.15	0.25	0.25	0.18	0.15	0.12	0.12	0.17	0.13	0.20	0.20
Aluminum	...	...	...	...	2.5–3.5	3.0–4.0	3.0–4.0	2.5–3.5	5.5–6.5	5.5–6.75	5.5–6.75
Vanadium	...	...	...	...	2.0–3.0	7.5–8.5	7.5–8.5	...	3.5–4.5	3.5–4.5	3.5–4.5
Tin	...	...	...	...	...	...	...	...	...	...	...
Ruthenium	0.04–0.06	0.04–0.06	...	...	...	...	...	...	...	...	...
Palladium	...	...	0.04–0.08	0.04–0.08	0.04–0.08	...	0.04–0.08	...	...	0.04–0.08	0.04–0.08
Cobalt	...	...	...	...	...	...	...	...	...	...	...
Molybdenum	...	...	...	...	...	3.5–4.5	3.5–4.5	14.0–16.0	...	...	...
Chromium	...	...	...	...	...	5.5–6.5	5.5–6.5	...	...	...	...
Nickel	0.04–0.06	0.04–0.06	...	...	...	...	...	...	...	...	0.3–0.8
Niobium	...	...	...	...	...	...	...	2.2–3.2	...	...	...
Zirconium	...	...	...	...	...	3.5–4.5	3.5–4.5	...	...	...	...
Silicon	...	...	...	...	...	...	...	0.15–0.25	...	...	...
Residuals, max (each)[D, E, F]	0.1	0.1	0.1	0.1	0.1	0.15	0.15	0.1	0.1	0.1	0.1
Residuals, max (total)[D, E, F]	0.4	0.4	0.4	0.4	0.4	0.4	0.4	0.4	0.4	0.4	0.4
Titanium[G]	Balance	Balance	Balance	Balance	Balance	Balance	Balance	Balance	Balance	Balance	Balance

(continued)

TABLE 2
CHEMICAL REQUIREMENTS[A] (CONT'D)

Element	Composition, % Grade 26	27	28	29	30	31	32	33	34
Nitrogen, max	0.03	0.03	0.03	0.03	0.03	0.05	0.03	0.03	0.05
Carbon, max	0.08	0.08	0.08	0.08	0.08	0.08	0.08	0.08	0.08
Hydrogen,[B,C] max	0.015	0.015	0.015	0.015	0.015	0.015	0.015	0.015	0.015
Iron, max	0.30	0.20	0.25	0.25	0.30	0.30	0.25	0.30	0.30
Oxygen, max	0.25	0.18	0.15	0.13	0.25	0.35	0.11	0.25	0.35
Aluminum	...	...	2.5–3.5	5.5–6.5	...	...	4.5–5.5	...	...
Vanadium	...	...	2.0–3.0	3.5–4.5	...	...	0.6–1.4	...	...
Tin	...	...	...	...	...	...	0.6–1.4	...	...
Ruthenium	0.08–0.14	0.08–0.14	0.08–0.14	0.08–0.14	...	...	...	0.02–0.04	0.02–0.04
Palladium	...	...	...	...	0.04–0.08	0.04–0.08	...	0.01–0.02	0.01–0.02
Cobalt	...	...	...	...	0.20–0.80	0.20–0.80	...	...	...
Molybdenum	...	...	...	...	...	...	0.6–1.2	...	...
Chromium	...	...	...	...	...	...	...	0.1–0.2	0.1–0.2
Nickel	...	...	...	...	...	...	...	0.35–0.55	0.35–0.55
Niobium	...	...	...	...	...	...	...	...	...
Zirconium	...	...	...	...	...	...	0.6–1.4	...	...
Silicon	...	...	...	...	...	...	0.06–0.14	...	...
Residuals, max each[D,E,F]	0.1	0.1	0.1	0.1	0.1	0.1	0.1	0.1	0.1
Residuals, max total[D,E,F]	0.4	0.4	0.4	0.4	0.4	0.4	0.4	0.4	0.4
Titanium[G]	Balance	Balance	Balance	Balance	Balance	Balance	Balance	Remainder	Remainder

[A] Analysis shall be completed for all elements listed in this Table for each grade. The analysis results for the elements not quantified in the Table need not be reported unless the concentration level is greater than 0.1% each or 0.4% total.

[B] Lower hydrogen may be obtained by negotiation with the manufacturer.

[C] Final product analysis.

[D] Need not be reported.

[E] A residual is an element present in a metal or an alloy in small quantities and is inherent to the manufacturing processs but not added intentionally. In titanium these elements include aluminum, vanadium, tin, chromium, molybdenum, niobium, zirconium, hafnium, bismuth, ruthenium, palladium, yttrium, copper, silicon, cobalt, tantalum, nickel, boron, manganese, and tungsten.

[F] The purchaser may, in his written purchase order, request analysis for specific residual elements not listed in this Specification.

[G] The percentage of titanium is determined by difference.

TABLE 3
PERMISSIBLE VARIATIONS IN PRODUCT ANALYSIS

Element	Product Analysis Limits, Max or Range, %	Permissible Variation in Product Analysis
Nitrogen	0.05	+0.02
Carbon	0.10	+0.02
Hydrogen	0.02	+0.002
Iron	0.50	+0.15
Oxygen	0.30	+0.03
Oxygen	0.31 to 0.40	±0.04
Aluminum	2.5 to 6.75	±0.40
Vanadium	0.6 to 4.5	±0.15
Vanadium	7.5 to 8.5	±0.40
Tin	0.6 to 3.0	±0.15
Palladium	0.01 to 0.02	±0.002
Palladium	0.04 to 0.08	±0.005
Palladium	0.12 to 0.25	±0.02
Ruthenium	0.02 to 0.04	±0.005
Ruthenium	0.04 to 0.06	±0.005
Ruthenium	0.08 to 0.14	±0.01
Zirconium	0.6 to 1.4	±0.15
Chromium	0.1 to 0.2	±0.02
Chromium	5.5 to 6.5	±0.30
Niobium	2.2 to 3.2	±0.15
Molybdenum	0.2 to 0.4	±0.03
Molybdenum	0.6 to 1.2	±0.15
Molybdenum	14.0 to 16.0	±0.50
Nickel	0.3 to 0.9	±0.05
Silicon	0.06 to 0.25	±0.02
Cobalt	0.2 to 0.8	±0.05
Residuals[A] (each)	0.15	+0.02

[A] A residual is an element in a metal or alloy in small quantities and is inherent to the manufacturing process but not added intentionally. In titanium these elements include aluminum, vanadium, tin, iron, chromium, molybdenum, niobium, zirconium, hafnium, bismuth, ruthenium, palladium, yttrium, copper, silicon, cobalt, tantalum, nickel, boron, manganese, and tungsten.

9. Sampling for Chemical Analysis

9.1 Samples for chemical analysis shall be representative of the material being tested. The utmost care must be used in sampling titanium for chemical analysis because of its great affinity for elements such as oxygen, nitrogen, and hydrogen. Therefore, in cutting samples for analysis, the operation should be carried out insofar as possible in a dust-free atmosphere. Chips should be collected from clean metal and tools should be clean and sharp. Samples for analysis should be stored in suitable containers.

10. Methods of Chemical Analysis

10.1 The chemical analysis shall be conducted by the standard techniques normally utilized by the manufacturer and purchaser. In case of disagreement Test Methods

TABLE 4
PERMISSIBLE VARIATIONS IN THICKNESS OF TITANIUM SHEET

Specified Thickness, in. (mm)	Permissible Variations in Thickness, Plus and Minus, in. (mm)
0.146 to 0.1875 (3.71 to 4.76), excl	0.014 (0.36)
0.131 to 0.145 (3.33 to 3.68)	0.012 (0.31)
0.115 to 0.130 (2.92 to 3.30)	0.010 (0.25)
0.099 to 0.114 (2.51 to 2.90)	0.009 (0.23)
0.084 to 0.098 (2.13 to 2.49)	0.008 (0.20)
0.073 to 0.083 (1.85 to 2.11)	0.007 (0.18)
0.059 to 0.072 (1.50 to 1.83)	0.006 (0.15)
0.041 to 0.058 (1.04 to 1.47)	0.005 (0.13)
0.027 to 0.040 (0.69 to 1.02)	0.004 (0.10)
0.017 to 0.026 (0.43 to 0.66)	0.003 (0.08)
0.008 to 0.016 (0.20 to 0.41)	0.002 (0.05)
0.006 to 0.007 (0.15 to 0.18)	0.0015 (0.04)
0.005 (0.13)	0.001 (0.03)

TABLE 5
PERMISSIBLE VARIATIONS IN WIDTH AND LENGTH OF TITANIUM SHEET

Specified Width, in. (mm) for Thicknesses Under $\frac{3}{16}$ in.	Permissible Variations in Width, in. (mm)
24 to 48 (610 to 1,220), excl	$+\frac{1}{16}$ (+1.60), −0
48 (1,220) and over	$+\frac{1}{8}$ (+3.20), −0
Specified Length, ft (m)	**Permissible Variations in Length, in. (mm)**
Up to 10 (3)	$+\frac{1}{4}$ (+6.35), −0
Over 10 to 20 (3 to 6)	$+\frac{1}{2}$ (+12.7), −0

TABLE 6
PERMISSIBLE VARIATIONS IN WEIGHT OF TITANIUM SHEET

The actual weight of any one item of an ordered thickness and size in any finish is limited in overweight by the following tolerance:

Any item of five sheets or less, or any item estimated to weigh 200 lb (91 kg) or less, may actually weigh as much as 10% over the estimated weight.

Any item of more than five sheets and estimated to weigh more than 200 lb may actually weigh as much as $7\frac{1}{2}$% over the estimated weight.

There is no under tolerance in weight for titanium sheets, under tolerance being restricted by the permissible thickness variations.

Only random (or mill size) sheets may be ordered on a square foot basis, and the number of square feet shipped may exceed the number ordered by as much as 5%.

TABLE 7
PERMISSIBLE VARIATIONS IN WIDTH [NOTE (1)] OF TITANIUM STRIP

Specified Thickness, in. (mm)	Permissible Variations in Thickness, Plus and Minus, for Widths Given, in. (mm)					
	Under 1/2 to 3/16 (12.70 to 4.76), Incl	1/2 to 6 (12.70 to 152.40), Incl	Over 6 to 9 (152.40 to 228.60), Incl	Over 9 to 12 (228.60 to 304.80), Incl	Over 12 to 20 (304.80 to 508.0), Incl	Over 20 to 24 (508.0 to 609.6), Excl
Under 3/16 to 0.161 (4.76 to 4.09), incl	...	0.016 (0.41)	0.020 (0.51)	0.020 (0.51)	0.031 (0.79)	0.031 (0.79)
0.160 to 0.100 (4.06 to 2.54), incl	0.010 (0.25)	0.010 (0.25)	0.016 (0.41)	0.016 (0.41)	0.020 (0.51)	0.020 (0.51)
0.099 to 0.069 (2.51 to 1.75), incl	0.008 (0.20)	0.008 (0.20)	0.010 (0.25)	0.010 (0.25)	0.016 (0.41)	0.020 (0.51)
0.068 (1.73) and under	0.005 (0.13)	0.005 (0.13)	0.005 (0.13)	0.010 (0.25)	0.016 (0.41)	0.020 (0.51)

NOTE:
(1) These tolerances are applicable for a standard No. 3 edge.

E 120 shall be used as the referee method except for carbon, oxygen, and hydrogen which are not covered in Test Methods E 120. Test Method E 1409 shall be used as a referee method for oxygen and Test Method E 1447 shall be used as a referee method for hydrogen.

11. Retests

11.1 If the results of any chemical or mechanical property test lot are not in conformance with the requirements of this specification, the lot may be retested at the option of the manufacturer. The frequency of the retest will double the initial number of tests. If the results of the retest conform to the specification, then the retest values will become the test values for certification. Only original conforming test results or the conforming retest results shall be reported to the purchaser. If the results for the retest fail to conform to the specification, the material will be rejected in accordance with Section 14.

12. Referee Test and Analysis

12.1 In the event of disagreement between the manufacturer and the purchaser on the conformance of the material to the requirements of this specification, a mutually acceptable referee shall perform the tests in question. The referee's testing shall be used in determining conformance of the material to this specification.

13. Rounding-Off Procedure

13.1 For purposes of determining conformance with this specification, an observed or calculated value shall be rounded off to the nearest "unit" in the last right-hand significant digit used in expressing the limiting value. This is in accordance with the round-off method of Practice E 29.

TABLE 8
PERMISSIBLE VARIATIONS IN LENGTH OF TITANIUM STRIP

Specified Length, ft (m)	Permissible Variations in Length, in. (mm)
To 5 (1.524), incl	+3/8 (+9.52), −0
Over 5 to 10 (1.524 to 3.048), incl	+1/2 (+12.70), −0
Over 10 to 20 (3.048 to 6.096), incl	+5/8 (+15.88), −0

14. Rejection

14.1 Material not conforming to the specification or to authorized modifications shall be subject to rejection. Unless otherwise specified, rejected material may be returned to the manufacturer at the manufacturer's expense, unless the purchaser receives within three weeks of notice of rejection, other instructions for disposition.

15. Certification

15.1 The manufacturer shall supply at least one copy of his report certifying that the material supplied has been inspected and tested in accordance with the requirements of this specification and that the results of chemical analysis and mechanical tests meet the requirements of this specification for the appropriate grade.

16. Marking and Packaging

16.1 *Marking:*

16.1.1 *Identification* — Unless otherwise specified, each plate, sheet, and strip shall be marked in the respective location indicated below, with the number of this specification, heat number, manufacturer's identification, and the nominal thickness in inches. The characters shall

be not less than $^{3}/_{8}$ in. (9.52 mm) in height, shall be applied using a suitable marking fluid, and shall be capable of being removed with a hot alkaline cleaning solution without rubbing. The markings shall have no deleterious effect on the material or its performance. The characters shall be sufficiently stable to withstand ordinary handling.

16.1.2 Plate, flat sheet, and flat strip over 6 in. (152 mm) in width shall be marked in lengthwise rows of characters recurring at intervals not greater than 3 in. (76 mm), the rows being spaced not more than 2 in. (51 mm) apart and alternately staggered. Heat numbers shall occur at least 3 times across the width of the sheet and at intervals not greater than 2 ft (0.610 m) along the length. As an option, when permitted, each plate, sheet, or cut length strip may be marked in at least one corner with the number of this specification, heat number, manufacturer's identification, and the normal thickness in inches or millimeters as required.

16.1.3 Flat strip 6 in. (152 mm) and under in width shall be marked near one end.

16.1.4 Coiled sheet and strip shall be marked near the outside end of the coil.

16.2 *Packaging* — Unless otherwise specified, material purchased under this specification may be packaged for shipment either by boxing, crating, single boarding, burlapping, or with no protection in accordance with the manufacturer's standard practice.

17. Keywords

17.1 plate; sheet; strip; titanium; titanium alloys

TABLE 9
PERMISSIBLE VARIATIONS IN THICKNESS OF TITANIUM STRIP [NOTE (1)]

Specified Thickness, in. (mm)	Permissible Variations in Thickness, Plus and Minus, for Widths Given, in. (mm)							
	Under 1 to 3/16 (25.4 to 4.76), Incl	Under 3 to 1 (76.2 to 25.4), Incl	3 to 6 (76.2 to 152.4), Incl	Over 6 to 9 (152.4 to 228.6), Incl	Over 9 to 12 (228.6 to 304.8), Incl	Over 12 to 16 (304.8 to 406.4), Incl	Over 16 to 20 (406.4 to 508.0), Incl	Over 20 to 24 (508.0 to 609.6), Incl
Under 3/16 to 0.161 (4.76 to 4.09), incl	0.002 (0.05)	0.003 (0.08)	0.004 (0.10)	0.004 (0.10)	0.004 (0.10)	0.005 (0.13)	0.006 (0.16)	0.006 (0.16)
0.160 to 0.100 (4.06 to 2.54), incl	0.002 (0.05)	0.002 (0.05)	0.003 (0.08)	0.004 (0.10)	0.004 (0.10)	0.004 (0.10)	0.005 (0.13)	0.005 (0.13)
0.099 to 0.069 (2.51 to 1.75), incl	0.002 (0.05)	0.002 (0.05)	0.003 (0.08)	0.003 (0.08)	0.003 (0.08)	0.004 (0.10)	0.004 (0.10)	0.004 (0.10)
0.068 to 0.050 (1.73 to 1.27), incl	0.002 (0.05)	0.002 (0.05)	0.003 (0.08)	0.003 (0.08)	0.003 (0.08)	0.003 (0.08)	0.004 (0.10)	0.004 (0.10)
0.049 to 0.040 (1.24 to 1.02), incl	0.002 (0.05)	0.002 (0.05)	0.0025 (0.06)	0.003 (0.08)	0.003 (0.08)	0.003 (0.08)	0.004 (0.10)	0.004 (0.10)
0.039 to 0.035 (0.99 to 0.89), incl	0.002 (0.05)	0.002 (0.05)	0.0025 (0.06)	0.003 (0.08)	0.003 (0.08)	0.003 (0.08)	0.003 (0.08)	0.003 (0.08)
0.034 to 0.029 (0.86 to 0.74), incl	0.0015 (0.04)	0.0015 (0.04)	0.002 (0.05)	0.0025 (0.06)	0.0025 (0.06)	0.0025 (0.06)	0.003 (0.08)	0.003 (0.08)
0.028 to 0.026 (0.71 to 0.66), incl	0.001 (0.03)	0.0015 (0.04)	0.0015 (0.04)	0.002 (0.05)	0.002 (0.05)	0.002 (0.05)	0.0025 (0.06)	0.003 (0.08)
0.025 to 0.020 (0.64 to 0.51), incl	0.001 (0.03)	0.001 (0.03)	0.0015 (0.04)	0.002 (0.05)	0.002 (0.05)	0.002 (0.05)	0.0025 (0.06)	0.0025 (0.06)
0.019 to 0.017 (0.48 to 0.43), incl	0.001 (0.03)	0.001 (0.03)	0.001 (0.03)	0.0015 (0.04)	0.0015 (0.04)	0.002 (0.05)	0.002 (0.05)	0.002 (0.05)
0.016 to 0.013 (0.41 to 0.33), incl	0.001 (0.03)	0.001 (0.03)	0.001 (0.03)	0.0015 (0.04)	0.0015 (0.04)	0.0015 (0.04)	0.002 (0.05)	0.002 (0.05)
0.02 (0.30)	0.001 (0.03)	0.001 (0.03)	0.001 (0.03)	0.001 (0.03)	0.001 (0.03)	0.0015 (0.04)	0.0015 (0.04)	0.0015 (0.04)
0.011 (0.28)	0.001 (0.03)	0.001 (0.03)	0.001 (0.03)	0.001 (0.03)	0.001 (0.03)	0.0015 (0.04)	0.0015 (0.04)	0.0015 (0.04)
0.010 [Note (2)] (0.25)	0.001 (0.03)	0.001 (0.03)	0.001 (0.03)	0.001 (0.03)		0.001 (0.03)	0.0015 (0.04)	0.0015 (0.04)

NOTES:

(1) Thickness measurements are taken 3/8 in. (9.5 mm) from the edge of the strip, except that on widths less than 1 in. (25.4 mm) the tolerances given are applicable for measurements at all locations.

(2) For thicknesses under 0.010 in. (0.25 mm), in widths to 16 in. (406 mm) a tolerance of ±10% of the thickness shall apply. In widths over 16 to 23 15/16 in. (406 to 608 mm), incl, a tolerance of ±15% of the thickness shall apply.

TABLE 10
PERMISSIBLE VARIATIONS IN WEIGHT OF TITANIUM STRIP

The actual shipping weight of any one item of an ordered thickness and width in any finish may exceed estimated weight by as much as 10%.

TABLE 11
PERMISSIBLE VARIATIONS IN WIDTH AND LENGTH [NOTE (1)] OF TITANIUM PLATE, RECTANGULAR, SHEARED

		Permissible Variations Over Specified Dimension for Thicknesses Given, in. (mm)					
		Under 3/8 (9.52)		3/8 to 5/8 (9.52 to 15.88), Excl		5/8 (15.88) and Over	
Specified Length, in. (mm)	Specified Width, in. (mm)	Width	Length	Width	Length	Width	Length
Under 120 (3,048)	Under 60 (1,524)	3/8 (9.52)	1/2 (12.70)	7/16 (11.11)	5/8 (15.88)	1/2 (12.70)	3/4 (19.05)
	60 to 84 (1,524 to 2,134), excl	7/16 (11.11)	5/8 (15.88)	1/2 (12.70)	11/16 (17.46)	5/8 (15.88)	7/8 (22.22)
	84 to 108 (2,134 to 2,743), excl	1/2 (12.70)	3/4 (19.05)	5/8 (15.88)	7/8 (22.22)	3/4 (19.05)	1 (25.40)
	108 (2,743) or over	5/8 (15.88)	7/8 (22.22)	3/4 (19.05)	1 (25.40)	7/8 (22.22)	1 1/8 (28.58)
120 to 240 (3,048 to 6,096), excl	Under 60 (1,524)	3/8 (9.52)	3/4 (19.05)	1/2 (12.70)	7/8 (22.22)	5/8 (15.88)	1 (25.40)
	60 to 84 (1,524 to 2,134), excl	1/2 (12.70)	3/4 (19.05)	5/8 (15.88)	7/8 (22.22)	3/4 (19.05)	1 (25.40)
	84 to 108 (2,134 to 2,743), excl	9/16 (14.29)	7/8 (22.22)	11/16 (17.46)	15/16 (23.81)	13/16 (20.64)	1 1/8 (28.58)
	108 (2,743) or over	5/8 (15.88)	1 (25.40)	3/4 (19.05)	1 1/8 (28.58)	7/8 (22.22)	1 1/4 (31.75)
240 to 360 (6,096 to 9,144), excl	Under 60 (1,524)	3/8 (9.52)	1 (25.40)	1/2 (12.70)	1 1/8 (28.58)	5/8 (15.88)	1 1/4 (31.75)
	60 to 84 (1,524 to 2,134), excl	1/2 (12.70)	1 (25.40)	5/8 (15.88)	1 1/8 (28.58)	3/4 (19.05)	1 1/4 (31.75)
	84 to 108 (2,134 to 2,743), excl	9/16 (14.29)	1 (25.40)	11/16 (17.46)	1 1/8 (28.58)	7/8 (22.22)	1 3/8 (34.92)
	108 (2,743) or over	11/16 (17.46)	1 1/8 (28.58)	7/8 (22.22)	1 1/4 (31.75)	1 (25.40)	1 3/8 (34.92)
360 to 480 (9,144 to 7,112), excl	Under 60 (1,524)	7/16 (11.11)	1 1/8 (28.58)	1/2 (12.70)	1 1/4 (31.75)	5/8 (15.88)	1 1/2 (38.10)
	60 to 84 (1,524 to 2,134), excl	1/2 (12.70)	1 1/4 (31.75)	5/8 (15.88)	1 3/8 (34.92)	3/4 (19.05)	1 1/2 (38.10)
	84 to 108 (2,134 to 2,743), excl	9/16 (14.29)	1 1/4 (31.75)	3/4 (19.05)	1 3/8 (34.92)	7/8 (22.22)	1 1/2 (38.10)
	108 (2,743) or over	3/4 (19.05)	1 3/8 (34.92)	7/8 (22.22)	1 1/2 (38.10)	1 (25.40)	1 5/8 (41.28)
480 to 600 (7,112 to 15,240), excl	Under 60 (1,524)	7/16 (11.11)	1 1/4 (31.75)	1/2 (12.70)	1 1/2 (38.10)	5/8 (15.88)	1 5/8 (41.28)
	60 to 84 (1,524 to 2,134), excl	1/2 (12.70)	1 3/8 (34.92)	5/8 (15.88)	1 1/2 (38.10)	3/4 (19.05)	1 5/8 (41.28)
	84 to 108 (2,134 to 2,743), excl	5/8 (15.88)	1 3/8 (34.92)	3/4 (19.05)	1 1/2 (38.10)	7/8 (22.22)	1 5/8 (41.28)
	108 (2,743) or over	3/4 (19.05)	1 1/2 (38.10)	7/8 (22.22)	1 5/8 (41.28)	1 (25.40)	1 3/4 (44.45)
600 (15,240) or over	Under 60 (1,524)	1/2 (12.70)	1 3/4 (44.45)	5/8 (15.88)	1 7/8 (47.62)	3/4 (19.05)	1 7/8 (47.62)
	60 to 84 (1,524 to 2,134), excl	5/8 (15.88)	1 3/4 (44.45)	3/4 (19.05)	1 7/8 (47.62)	7/8 (22.22)	1 7/8 (47.62)
	84 to 108 (2,134 to 2,743), excl	5/8 (15.88)	1 3/4 (44.45)	3/4 (19.05)	1 7/8 (47.62)	7/8 (22.22)	1 7/8 (47.62)
	108 (2,743) or over	7/8 (22.22)	1 3/4 (44.45)	1 (25.40)	2 (50.80)	1 1/8 (28.58)	2 1/4 (57.15)

NOTE:
(1) The tolerance under the specified width and length is 1/4 in. (6.35 mm).

TABLE 12
PERMISSIBLE VARIATIONS FROM A FLAT SURFACE FOR TITANIUM PLATE, ANNEALED

Specified Thickness, in. (mm)	48 (1,219) or Under	48, Excl to 60 (1,219 to 1,524), Excl	60 to 72 (1,524 to 1,829), Excl	72 to 84 (1,829 to 2,134), Excl	84 to 96 (2,134 to 2,438), Excl	96 to 108 (2,438 to 2,743), Excl	108 to 120 (2,743 to 3,048), Excl	120 to 144 (3,048 to 3,658), Excl	144 (3,658) and Over
3/16 to 1/4 (4.76 to 6.35), excl	3/4 (19.05)	1 1/16 (26.99)	1 1/4 (31.75)	1 3/8 (34.92)	1 5/8 (41.28)	1 5/8 (41.28)	...	...	...
1/4 to 3/8 (6.35 to 9.54), excl	11/16 (17.46)	3/4 (19.05)	15/16 (23.81)	1 1/8 (28.58)	1 3/8 (34.92)	1 7/16 (36.51)	1 9/16 (36.69)	1 7/8 (47.62)	...
3/8 to 1/2 (9.54 to 12.70), excl	1/2 (12.70)	9/16 (14.29)	11/16 (17.46)	3/4 (19.05)	15/16 (23.81)	1 1/8 (28.58)	1 1/4 (31.75)	1 7/16 (36.51)	1 3/4 (44.45)
1/2 to 3/4 (12.70 to 19.05), excl	1/2 (12.70)	9/16 (14.29)	5/8 (15.88)	5/8 (15.88)	13/16 (20.64)	1 1/8 (28.58)	1 1/8 (28.58)	1 1/8 (28.58)	1 3/8 (34.92)
3/4 to 1 (19.05 to 25.40), excl	1/2 (12.70)	9/16 (14.29)	5/8 (15.88)	5/8 (15.88)	3/4 (19.05)	13/16 (20.64)	15/16 (23.81)	1 (25.40)	1 1/8 (28.58)
1 to 1 1/2 (25.40 to 38.10), excl	1/2 (12.70)	9/16 (14.29)	9/16 (14.29)	9/16 (14.29)	11/16 (17.46)	11/16 (17.46)	11/16 (17.46)	3/4 (19.05)	1 (25.40)
Over 1 1/2 to 4 (38.10 to 101.6), excl	3/16 (4.76)	5/16 (7.94)	3/8 (9.54)	7/16 (11.11)	1/2 (12.70)	9/16 (14.29)	5/8 (15.88)	3/4 (19.05)	7/8 (22.22)
Over 4 to 6 (101.6 to 152.4), excl	1/4 (6.35)	3/8 (9.54)	1/2 (12.70)	9/16 (14.29)	5/8 (15.88)	3/4 (19.05)	7/8 (22.22)	1 (25.40)	1 1/8 (28.58)

GENERAL NOTES:

(a) Variations in flatness apply to plates up to 15 ft (4.57 m) in length, or to any 15 ft of longer plates.

(b) If the longer dimension is under 36 in. (914 mm) the variation is not greater than 1/4 in. (6.35 mm).

(c) The shorter dimension specified is considered the width and the variation in flatness across the width does not exceed the tabular amount for that dimension.

(d) The maximum deviation from a flat surface does not customarily exceed the tabular tolerance for the longer dimension specified.

TABLE 13
PERMISSIBLE VARIATIONS IN THICKNESS FOR TITANIUM PLATE

	Width, in. (mm) [Note (1)]			
	To 84 (2,134), Incl	Over 84 (2,134) to 120 (3,048), Incl	Over 120 (3,048) to 144 (3,658), Incl	Over 144 (3,658)
Specified Thickness, in. (mm)	Tolerances Over Specified Thickness, in. (mm) [Note (2)]			
0.1875 (4.76) to 0.375 (9.52), excl	0.045 (1.14)	0.050 (1.27)	. . .	. . .
0.375 (9.52) to 0.750 (19.05), excl	0.055 (1.40)	0.060 (1.52)	0.075 (1.90)	0.090 (2.29)
0.750 (19.05) to 1.000 (25.40), excl	0.060 (1.52)	0.065 (1.65)	0.085 (2.16)	0.100 (2.54)
1.000 (25.40) to 2.000 (50.80), excl	0.070 (1.78)	0.075 (1.90)	0.095 (2.41)	0.115 (2.92)
2.000 (50.80) to 3.000 (76.20), excl	0.125 (3.18)	0.150 (3.81)	0.175 (4.44)	0.200 (5.08)
3.000 (76.20) to 4.000 (101.6), excl	0.175 (4.44)	0.210 (5.33)	0.245 (6.22)	0.280 (7.11)
4.000 (101.6) to 6.000 (152.4), excl	0.250 (6.35)	0.300 (7.62)	0.350 (8.89)	0.400 (10.16)
6.000 (152.4) to 8.000 (203.2), excl	0.350 (8.89)	0.420 (10.67)	0.490 (12.45)	0.560 (14.22)
8.000 (203.2) to 10.000 (254.0), incl	0.450 (11.43)	0.540 (13.72)	0.630 (16.00)	. . .

NOTES:

(1) Thickness is measured along the longitudinal edges of the plate at least $^{3}/_{8}$ in. (9.52 mm), but not more than 3 in. (76.20 mm), from the edge.

(2) For circles, the over thickness tolerances in this Table apply to the diameter of the circle corresponding to the width ranges shown. For plates of irregular shape, the over thickness tolerances apply to the greatest width corresponding to the width ranges shown. For plates up to 10 in. (254.0 mm) incl. in thickness, the tolerance under the specified thickness is 0.010 in. (0.25 mm).

SUPPLEMENTARY REQUIREMENTS

These requirements shall apply only when specified in the purchase order, in which event the specified tests shall be made by the manufacturer before shipment of the plates.

S1. Surface Requirement Bend Tests

S1.1 The purpose of this test is to measure the cleanliness or ductility, or both, of the metal surface.

S1.2 Two guided- or free-bend tests of sheet or plate material limited to Grades 1, 2, and 3 shall be made. Each of these bends will place opposite surfaces of the sheet or plate material in tension.

S1.3 The bends are to be made in accordance with Method E 190 or Method E 16, except that the welds mentioned in these standards are not required. The bend specimen may be of less than full material thickness; however, the outer surface of the specimen must be representative of the product as supplied.

S1.4 The bend radius will be such to provide minimum elongation of the outer fibers of the bent specimen as follows:

Grade 1 — 20% equivalent to 2T bend radius at 180° bend

Grade 2 — 20% equivalent to 2T bend radius at 180° bend

Grade 3 — 16% equivalent to $2\frac{1}{2}$T bend radius at 180° bend

S1.5 Criteria for acceptance will be the absence of any cracking or surface separations (not originating at the edge of specimen).

SPECIFICATION FOR COPPER-BASE ALLOY CENTRIFUGAL CASTINGS

SB-271

(Identical with ASTM Specification B 271-96 for the alloys covered, except for the deletion of requirements for government procurement and the suggested heat treatment requirements. Certification has been made mandatory.)

1. Scope

1.1 This specification establishes requirements for centrifugal castings of copper-base alloys having the nominal compositions shown in Table 1.

1.2 The values stated in inch-pound units are the standard. SI values in parentheses are given for information only.

2. Referenced Documents

2.1 The following documents in the current issue of the Book of Standards form a part of this specification to the extent referenced herein:

2.1.1 *ASTM Standards:*

B 208 Practice for Preparing Tension Test Specimens for Copper-Base Alloys for Sand, Permanent Mold, Centrifugal, and Continuous Castings

2.1.2 *ASME Standards:*

SB-824 Specification for General Requirements for Copper Alloy Castings

SB-846 Terminology for Copper and Copper Alloys

3. Terminology

3.1 Definitions of terms relating to copper alloys can be found in Terminology B 846.

TABLE 1
NOMINAL COMPOSITIONS

Classification	Copper Alloy UNS No.	Commercial Designation	Copper	Iron	Aluminum
Aluminum bronze	C95200	Grade A	88	3	9
	C95400	Grade C	85	4	11

4. Ordering Information

4.1 Orders for centrifugal castings under this specification should include the following information:

4.1.1 Specification title, number, and year of issue,

4.1.2 Quantity (length or number) of castings,

4.1.3 Copper Alloy UNS Number (Table 1) and temper (as-cast),

4.1.4 Dimensions or drawing number and condition (as-cast, machined, etc.),

4.2 The following are optional and should be specified in the purchase order when required:

4.2.1 Chemical analysis of residual elements (Section 6.3),

4.2.2 Pressure test or soundness requirements (Specification SB-824),

4.2.3 Approval of weld repair (Section 8),

4.2.4 Certification (Specification SB-824),

4.2.5 Foundry test report (Specification SB-824),

4.2.6 Witness inspection (Specification SB-824), and

4.2.7 Product marking (Specification SB-824).

5. Chemical Composition

5.1 The centrifugal castings shall conform to the chemical requirement shown in Table 4 for the Copper Alloy UNS Numbers specified in the purchase order.

5.2 These specification limits do not preclude the presence of other elements. Limits may be established and analysis required for unnamed elements agreed upon between the manufacturer or supplier and the purchaser.

TABLE 2
MECHANICAL REQUIREMENTS

Copper Alloy UNS No.	Tensile Strength, min		Yield Strength,[C] min		Elongation in 2 in. Or 50 mm, min, %	Brinell Hardness No.[D] (3000-kG Load), min
	ksi[A]	MPa[B]	ksi[A]	MPa[B]		
C95200	65	450	25	170	20	110
C95400	75	515	30	205	12	150
C95400(HT)	90	620	45	310	6	190

[A] ksi–1000 psi.
[B] See Appendix.
[C] Yield strength shall be determined as the stress producing an elongation under load of 0.5%, that is 0.01 in. (0.254 mm) in a gage length of 2 in. (50.8 mm).
[D] For information only.

Copper or zinc may be given as remainder and may be taken as the difference between the sum of all elements analyzed and 100%. When all named elements in Table 3 are analyzed, their sum shall be as specified in Table 4.

5.3 It is recognized that residual elements may be present in cast copper-base alloys. Analysis shall be made for residual elements only when specified in the purchase order.

6. Mechanical Properties

6.1 Mechanical properties shall be determined from test bar castings cast in accordance with Practice B 208 and shall meet the requirements shown in Table 2.

7. Weld Repair

7.1 The castings shall not be weld repaired without customer approval.

8. ASME Requirements

Castings in Copper Alloy UNS Nos. C95200 and C95400 shall comply with the following:

8.1.1 Certification requirements of Specification B 824.

8.1.2 Foundry test report requirements of Specification B 824.

8.1.3 Castings shall be marked with the manufacturer's name, the Copper Alloy UNS No., and the casting quality factor. In addition, heat numbers or serial numbers that are traceable to heat numbers shall be marked on all pressure-containing castings individually weighing 50 lb (22.7 kg) or more. Pressure-containing castings weighing less than 50 lb (22.7 kg) shall be marked with either the heat number or a serial number that will identify the casting as to the month in which it was poured. Marking shall be in such a position as to not injure the usefulness of the casting.

9. General Requirements

9.1 The following sections of Specification SB-824 form a part of this specification. In the event of a conflict between this specification and Specification SB-824, the requirements of this specification shall take precedence.

9.1.1 Terminology (Section 3),

9.1.2 Other Requirements (Section 7),

9.1.3 Dimensions, Mass, and Permissible Variations (Section 8),

9.1.4 Workmanship, Finish, and Appearance (Section 9),

9.1.5 Sampling (Section 10),

9.1.6 Number of Tests and Retests (Section 11),

9.1.7 Specimen Preparation (Section 12),

9.1.8 Test Methods (Section 13),

9.1.9 Significance of Numerical Limits (Section 14),

9.1.10 Inspection (Section 15),

9.1.11 Rejection and Rehearing (Section 16),

9.1.12 Certification (Section 17),

9.1.13 Test Report (Section 18),

9.1.14 Packaging and Package Marking (Section 20),

9.1.15 Supplementary Requirements.

10. Sampling

10.1 Separate centrifugally cast test bars shall be made in accordance with Practice B 208.

TABLE 3
CHEMICAL REQUIREMENTS

Copper Alloy UNS No.	Composition, % max Except as Indicated																		
	Major Elements								Residual Elements										
	Copper	Tin	Lead	Zinc	Iron	Nickel incl Cobalt	Aluminum	Manganese	Silicon	Iron	Antimony	Nickel incl Cobalt	Sulfur	Phosphorus	Aluminum	Other	Silicon
C95200	86.0 min	...	...	...	2.5–4.0	...	8.5–9.5	...	...	...	...	...	...	...	...	...	...
C95400	83.0 min	...	...	...	3.0–5.0	1.5	10.0–11.5	0.50	...	...	...	...	...	...	...	...	...

10.2 At the manufacturer's option test bars may be removed from the casting instead of from a separately cast coupon.

10.3 Separately cast test bars representing castings in Copper Alloy UNS No. C95400HT temper annealed shall be heat treated with the castings.

11. Test Methods

11.1 Analytical chemical methods are given in Specifications SB-824.

11.1.1 Test methods to be followed for the determination of elements resulting from contractual or purchase order agreement shall be as agreed upon between the manufacturer or supplier and the purchaser.

11.2 Brinell hardness readings shall be taken on the grip end of the tension test bar and shall be made in accordance with Test Method E 10, with the exception that a 3000 kg load shall be used.

TABLE 4
SUM OF ALL NAMED ELEMENTS ANALYZED

Copper Alloy UNS No.	Copper Plus Named Elements % min
C95200	99.0
C95400	99.5

12. Product Marking

12.1 When specified in the purchase order the castings shall be marked with the alloy number.

13. Keywords

13.1 centrifugal castings; copper alloy castings; copper-base alloy castings

SPECIFICATION FOR COPPER AND COPPER-ALLOY DIE FORGINGS (HOT-PRESSED)

SB-283

(Identical with ASTM Specification B 283-99a for the alloys and tempers covered.)

1. Scope

1.1 This specification establishes the requirements for copper and copper alloy die forgings produced by the hot pressing method. The following copper and copper alloys are included:

Copper or Copper Alloy UNS No.	Name
C11000	copper
C14500	copper-tellurium
C14700	copper-sulfur
C36500	leaded Muntz metal
C37700	forging brass
C46400	naval brass
C48200	medium leaded naval brass
C48500	leaded naval brass
C61900	aluminum bronze
C62300	aluminum bronze, 9%
C63000	aluminum-nickel bronze
C63200	aluminum-nickel bronze
C64200	aluminum-silicon bronze
C64210	aluminum-silicon bronze, 6.7%
C65500	high-silicon bronze (A)
C67500	manganese bronze (A)
C67600	. . .
C70620	copper-nickel, 90-10
C71520	copper-nickel, 70-30
C77400	nickel silver, 45-10

1.2 The values stated in inch-pound units are the standard. The SI values in parentheses are for information only.

1.3 The following safety caveat pertains only to Section 10 of this specification: *This standard does not purport to address all of the safety concerns, if any, associated with its use. It is the responsibility of the user of this standard to establish appropriate safety and health practices and determine the applicability of regulatory limitations prior to use.*

NOTE 1 — Nominal composition and relative forgeability ratings are given in Appendix X1. Copper-nickel alloys C70620 and C71520 are intended for welded applications with seawater exposure.

2. Referenced Documents

2.1 *ASTM Standards:*

B 249 Specification for General Requirements for Wrought Copper and Copper Alloy Rod, Bar, Shapes and Forgings

B 601 Practice for Temper Designations for Copper and Copper Alloys—Wrought and Cast

B 846 Terminology for Copper and Copper Alloys

E 8 Test Methods for Tension Testing of Metallic Materials

E 54 Test Methods for Chemical Analysis of Special Brasses and Bronzes

E 62 Test Methods for Chemical Analysis of Copper and Copper Alloys (Photometric Method)

E 75 Test Methods for Chemical Analysis of Copper-Nickel and Copper-Nickel-Zinc Alloys

E 478 Test Methods for Chemical Analysis of Copper Alloys

2.2 *ISO Standard:*

7602 Determination of Tellurium Content (High Content)—Flame Atomic Absorption Spectrometric Method

2.3 *Military Standards:*

MIL-STD-792 Identification Marking Requirements for Special Purpose Components[1]

NAVSEA T9074-AS-GIB-010/271 Requirements for Nondestructive Testing Method[1]

[1] Available from DODSSP, Bldg. 4/Sec. D. 700 Robbins Ave., Philadelphia, PA 19111-5098.

2.4 *ASME Standard:*

SB-249 Specification for General Requirements for Wrought Copper and Copper-Alloy Rod, Bar, and Shapes.

3. General Requirements

3.1 The following sections of Specification B 249 constitute a part of this specification:

3.1.1 Terminology,

3.1.2 Materials and Manufacture,

3.1.3 Workmanship, Finish and Appearance,

3.1.4 Sampling,

3.1.5 Number of Tests and Retests,

3.1.6 Specimen Preparation,

3.1.7 Test Methods,

3.1.8 Significance of Numerical Limits,

3.1.9 Inspection,

3.1.10 Rejection and Rehearing,

3.1.11 Certification,

3.1.12 Test Reports,

3.1.13 Packaging and Package Marking, and

3.1.14 Supplementary Requirements.

3.1.15 In addition, when a section with a title identical to one of those referenced in 3.1 appears in this specification, it contains additional requirements that supplement those appearing in Specification B 249.

4. Terminology

4.1 *Definitions:*

4.1.1 For definitions of terms used in this specification, refer to Terminology B 846.

4.2 *Definition of Term Specific to This Standard:*

4.2.1 *hot pressed forging, n* — a product made by pressing a heated blank or section of wrought copper or copper alloy in a closed impression die.

5. Ordering Information

5.1 Orders for product produced to this specification shall include the following information:

5.1.1 ASTM designation and year of issue,

5.1.2 Copper or Copper Alloy UNS No. designation (Section 1.1),

5.1.3 Drawing showing the shape dimensions and tolerances (Section 11),

5.1.4 Temper (Section 8),

5.1.5 Quantity: total weight or number of pieces for each form, temper, and copper or copper alloy,

5.1.6 When product is purchased for agencies of the U.S. Government (Section 12), and

5.1.7 When product must adhere to the requirements of ASME Boiler and Pressure Vessel Code (Section 9).

5.2 The following requirements are optional and shall be specified in the contract or purchase order.

5.2.1 Certification (Section 14 and Supplementary Requirements),

5.2.2 Mill test report (Specification B 249), and

5.2.3 Ultrasonic inspection report (Supplementary Requirements).

6. Material and Manufacture

6.1 *Materials:*

6.1.1 The starting material shall be rods, billets, or blanks cut from cast or wrought material of one of the copper or copper alloys listed in 1.1 of this specification.

6.1.2 In the event heat identification or traceability is required, the purchaser shall specify the details desired.

NOTE 2 — Because of the discontinuous nature of the processing of castings into wrought products, it is not always practical to identify specific casting analysis with a specific quantity of finished material.

6.2 *Manufacture:*

6.2.1 The product shall be manufactured by hot pressing material between the upper and lower sections of a set of dies conforming to the configuration defined by the purchaser's submitted drawings.

6.2.2 Product of Copper Alloy UNS No. C63200 shall be heat treated (Section 10).

7. Chemical Composition

7.1 The materials shall conform to the requirements specified in Table 1 for the Copper or Copper Alloy UNS No. designated in the ordering information.

7.2 These composition limits do not preclude the presence of other elements. When limits for unnamed elements are required, they shall be established by agreement between manufacturer or supplier and the purchaser.

7.2.1 For copper alloys in which zinc is specified as a remainder, either copper or zinc is permitted to be taken as the difference between the sum of results for all

TABLE 1
CHEMICAL REQUIREMENTS

Copper or Copper Alloy UNS No.	Composition, %												
	Copper	Lead	Tin	Iron	Nickel (incl Co)	Aluminum	Silicon	Manganese	Zinc	Sulfur	Tellurium	Phosphorus	Arsenic
C11000	99.90[A] min	...	...	...	...	...	...	...	...	...	...	...	...
C14500[B]	99.90[C] min	...	...	...	...	...	...	...	...	...	0.40–0.7	0.004–0.012[D]	...
C14700[B]	99.90[E] min	...	...	...	...	...	...	...	...	0.20–0.50	...	0.002–0.005[D]	...
C36500	58.0–61.0	0.25–0.7	0.25 max	0.15 max	...	...	...	...	remainder	...	...	...	...
C37700	58.0–61.0	1.5–2.5	...	0.30 max	...	...	...	...	remainder	...	...	...	...
C46400	59.0–62.0	0.20 max	0.50–1.0	0.10 max	...	...	...	...	remainder	...	...	...	...
C48200	59.0–62.0	0.40–1.0	0.50–1.0	0.10 max	...	...	...	...	remainder	...	...	...	...
C48500	59.0–62.0	1.3–2.2	0.50–1.0	0.10 max	...	...	...	...	remainder	...	...	...	...
C61900	remainder	0.02 max	0.6 max	3.0–4.5[F]	...	8.5–10.00	...	...	0.8 max	...	...	...	...
C62300	remainder	...	0.6 max	2.0–4.0	1.0 max	8.5–10.0	0.25 max	0.50 max	...	...	...	...	...
C63000	remainder	...	0.20 max	2.0–4.0	4.0–5.5	9.0–11.0	0.25 max	1.5 max	0.30 max	...	...	...	...
C63200	remainder	0.02 max	...	3.5–4.3[G]	4.0–4.8	8.7–9.5	0.10 max	1.2–2.0	...	...	...	...	...
C64200	remainder	0.05 max	0.20 max	0.30 max	0.25 max	6.3–7.6	1.5–2.2	0.10 max	0.50 max	...	...	...	0.15 max
C64210	remainder	0.05 max	0.20 max	0.30 max	0.25 max	6.3–7.0	1.50–2.0	0.10 max	0.50 max	...	...	...	0.15 max
C65500	remainder	0.05 max	...	0.8 max	0.6 max	...	2.8–3.8	0.50–1.3	1.5 max	...	...	...	...
C67500	57.0–60.0	0.20 max	0.50–1.5	0.8–2.0	...	0.25 max	...	0.05–0.50	remainder	...	...	...	...
C67600	57.0–60.0	0.50–1.0	0.50–1.0	0.40–1.3	...	...	...	0.05–0.50	remainder	...	...	...	...
C70620[H]	86.5[A] min	0.02 max	...	1.0–1.8	9.0–11.0	...	...	1.0 max	0.50 max	0.02 max	...	0.02 max	...
C71520[H]	65.0[A] min	0.02 max	...	0.40–1.0	29.0–33.0	...	...	1.0 max	0.50 max	0.02 max	...	0.02 max	...
C77400	43.0–47.0	0.20 max	...	...	9.0–11.0	...	...	...	remainder	...	...	...	...

[A] Silver counting as copper.
[B] Includes oxygen-free or deoxidized grades with deoxidizers (such as phosphorous, boron, lithium, or others) in amount agreed upon.
[C] This includes copper plus silver plus tellurium.
[D] Other deoxidizers may be used as agreed upon, in which case phosphorous need not be present.
[E] This includes copper plus silver plus sulfur plus phosphorous.
[F] For boiler code application maximum iron content shall be 4.0%.
[G] Iron content shall not exceed nickel content.
[H] Carbon shall be 0.05% max.

TABLE 2
TENSILE REQUIREMENTS

Diameter or Section Thickness, in. (mm)		Tensile Strength, min		Yield Strength at 0.5% Extension Under Load, min		Elongation in 4 × Diameter or Thickness of Specimen, min, %
		ksi	MPa[A]	ksi	MPa[A]	
Copper Alloy UNS No. C37700						
Up to 1½ (38.1), incl		50	345	18	124	25
Over 1½ (38.1)		46	317	15	103	30
Copper Alloy UNS No. C64200						
Up to 1½ (38.1), incl		70	483	25	172	30
Over 1½ (38.1)		68	469	23	156	35
Copper Alloy UNS No. C46400, C48200 and C48500						
All sizes		52	358	22	152	25
Copper Alloy UNS No. C70620						
Up to 6 (152.3), incl	M10 temper	45	310	18	124	30
Over 6 (152.3)	M10 temper	40	276	15	103	30
All sizes	O20 temper	40	276	15	103	30
Copper Alloy UNS No. C71520						
Up to 6 (152.3), incl	M10 temper	50	345	20	138	30
Over 6 (152.3)	M10 temper	45	310	18	124	30
All sizes	O20 temper	45	310	18	124	30

[A] See Appendix X3.

the elements analyzed and 100%. When copper is so determined, that difference value shall conform to the requirements given in Table 1.

7.2.2 For copper alloys for which copper is specified as the remainder, copper may be taken as the difference between the sum of all the elements analyzed and 100%.

7.3 When all the elements in Table 1 are determined for the individual alloy, the sum of results shall be 99.6% min for Copper Alloy UNS No. C36500, C46400, C48200, C48500 and 99.5% for all others.

8. Temper

8.1 Tempers, as defined in Practice B 601, available under this specification are M10 (as hot forged-air cooled), M11 (as forged-quenched), TQ50 (quench hardened and temper annealed), and O20 (hot forged and annealed).

8.2 Alloys C70620 and C71520 shall be furnished in the M10 temper unless the O20 temper is specified.

9. Mechanical Property Requirements

9.1 Mechanical property requirements are subject to agreement between the manufacturer and the purchaser.

9.2 Alloys C70620 and C71520 and product specified to meet the requirements of the *ASME Boiler and Pressure Vessel Code* shall have tensile properties as prescribed in Table 2 when tested in accordance with Test Methods E 8.

10. Heat Treatment

10.1 Product produced from Copper Alloy UNS No. C63200 shall be heat treated as follows:

10.1.1 Heat to 1550°F (843°C) minimum for 1 h minimum and quench in water or other suitable medium.

10.1.2 Temper at 1300+ and −25°F (704+ and −14°C) for 3 to 9 h as required to meet mechanical properties.

11. Special Government Requirements

11.1 Product purchased for agencies of the U.S. Government shall conform to the additional requirements prescribed in the Supplementary Requirements section of this specification.

12. Dimensions and Permissible Variations

12.1 The dimensions and tolerances for forgings shall be those agreed upon between the manufacturer and the

purchaser, and such dimensions and tolerances shall be specified on the drawings which form a part of the contract or purchase order.

NOTE 3 — Typical tolerances commonly used for forgings are shown in Table X2.1.

13. Test Methods

13.1 *Chemical Analysis:*

13.1.1 Chemical composition shall, in case of disagreement, be determined as follows:

Element		ASTM Test Method
Aluminum		E 478
Arsenic		E 62
Copper		E 478
Iron	<1.3%	E 478, E 75 for CuNi
	>1.3%	E 54, E 75 for CuNi
Lead		E 478 (AA)
Manganese		E 62, E 75 for CuNi
Nickel	<5%	E 478 (photometric)
	>5%	E 478 (gravimetric)
Phosphorus		E 62
Silicon		E 54 (perchloric acid)
Tin	<1.3%	E 478
	>1.3%	E 54
Zinc	<2%	E 478 (AA)
	>2%	E 478 (titrimetric)
Tellurium		ISO Test Method 7602

NOTE: < = less than: > = greater than

13.1.2 Test method(s) to be followed for the determination of element(s) required by contractual or purchase order agreement shall be as agreed upon between the supplier and the purchaser.

Property	Rounded Unit for Observed or Calculated Value
Chemical composition	nearest unit in the last right-hand place of figures
Tensile strength	nearest ksi, nearest 5 MPa for over 10 to 100 ksi, incl.
Yield strength	nearest ksi, nearest 5 MPa for over 10 to 100 ksi, incl.
Elongation	nearest 1%

14. Certification

14.1 Certification to this specification is mandatory for product purchased for *ASME Boiler and Pressure Vessel* applications.

15. Keywords

15.1 copper and copper alloy die forgings (hot pressed); die forgings (hot pressed)

SUPPLEMENTARY REQUIREMENTS

The following supplementary requirements shall apply only when specified by the purchaser in the inquiry, contract or order, for agencies of the U.S. Government.

S1. Supplementary Requirements S1, S2, and S4 of ASTM B 249 shall apply.

S2. Identification Marking — Individual forgings shall be marked with the producer's name or trademark, this ASTM specification number, the UNS number, and the heat number or serial number. The method and location of marking shall be in accordance with MIL-STD-792. If approved by the purchaser, the forgings may be bundled or boxed and each bundle or box provided with a metal or oil-proof tag showing the above information.

S3. Sampling — The lot size, portion size, and selection of sample pieces shall be as follows:

S3.1 *Lot Size* — For forgings weighing 250 lbs (114 kg) or less, a lot shall be 2000 lbs (909 kg) or less, and shall consist of forgings of the same design and alloy forged from the same material heat and heat treated at the same time. For forgings exceeding 250 lbs (114 kg), each individual forging shall constitute a lot.

S3.2 *Portion Size* — For forgings less than 250 lbs (114 kg), two forgings per lot shall be selected for tensile testing. Tensile tests shall be performed on each forging over 250 lbs (114 kg).

S3.3 *Chemical Analysis* — If heat identification is required, one sample for chemical analysis shall be taken for each heat at the time of pouring or from semifinished or finished product.

S3.4 *Tensile Testing* — The tensile specimens shall be taken from integral forging prolongations or shall be removed from the forgings by trepanning. Alternatively, samples may be taken from separately forged test bars of the same heat as the forgings in the lot provided the wall thickness and amount of working for the test bar are equivalent to those for the forgings. The axis of the tensile specimen shall be located at any point midway between the center and the surface of solid forgings and at any point midway between the inner and outer surfaces of the wall of hollow forgings, and shall be parallel to the direction of greatest grain flow to the greatest extent possible.

S4. Liquid Penetrant Inspection — When specified by the purchaser, each piece of each lot shall be inspected in accordance with NAVSEA T9074-AS-GIB-101/271.

S5. Ultrasonic Inspection — When specified by the purchaser, each piece of each lot shall be inspected.

S5.1 *General Requirements* — Ultrasonic testing shall be performed in accordance with NAVSEA T9074-AS-GIB-101/271. Acoustic compatibility between the production material and the calibration standard material shall be within 75%. If the acoustic compatibility is within 25%, no gain compensation is required for the examination. If acoustic compatibility difference is between 25 and 75%, a change in the gain or dB controls shall be accomplished to compensate for the differences in acoustic compatibility. This method cannot be used if the ultrasonic noise level exceeds 50% of the rejection value.

S5.2 *Calibration:*

S5.2.1 *Shear Wave* — The shear wave test shall be calibrated on two notches, one notch cut into the inside and one into the outside surface. The notches shall be cut axially and shall have a depth of 5% of the material thickness or $\frac{1}{4}$ in. (6.4 mm), whichever is less. Notch length shall not exceed 1 in. (25.4 mm). Notches shall be made either in the piece to be examined or in a separate defect-free specimen of the same size (within ± $\frac{1}{8}$ in. (3.18 mm), shape, material, and condition, or acoustically similar material. The position and amplitude of the response from each notch shall be marked on the instrument screen or a transparent overlay, and these marks shall be used as the evaluation reference. Indications that appear between these points shall be evaluated on the basis of a straight line joining the two peak amplitudes.

S5.2.2 *Longitudinal Wave* — The longitudinal wave test shall be calibrated on a flat-bottomed reference hole of a given diameter in accordance with Table S5.1 for specified material thickness drilled either into the piece to be tested or into a separate defect-free specimen of the same size [within ± $\frac{1}{8}$ in. (3.18 mm)], shape, material, and condition or acoustically similar material. Holes are to be drilled to midsection and the bottom of the hole shall be parallel to the entrant surface. The ultrasonic test instrument shall be adjusted so that the response from the reference hole shall not be less than 25% and not more than 75% of screen height.

S5.2.3 *Recalibration* — During quality conformance inspection, any realignment of the search unit that

TABLE S5.1
ULTRASONIC TESTING REFERENCE HOLE FOR ROD, BAR, DISK, PANCAKE FORGINGS, AND FORGINGS

Material Thickness, in. (mm)	Hole Diameter, in. (mm)
Up to and including 6 (152)	1/8 (3.18)
Over 6 (152) and including 16 (406)	1/4 (6.4)
Over 16 (406)	As agreed upon

will cause a decrease in the calibrated sensitivity and resolution, or both, or any change in search unit, couplant, instrument settings, or scanning speed from that used for calibration shall require recalibration. Recalibration shall be performed at least once per 8-h shift.

S5.3 *Procedure:*

S5.3.1 *Ring and Hollow Round Products* — Rings and other hollow cylindrical products shall be tested using the shear wave method by the contact or immersion technique. The shear wave entrant angle shall be such to ensure reflection from the notch or notches used in calibration. For contact testing, the search unit shall be fitted with a wedge or shoe machined to fit the curvature of the piece being inspected. The product also shall be inspected with a longitudinal wave test from the external circumferential and end surfaces.

S5.3.2 *Disk or Pancake Forgings* — Disk or pancake forgings shall be inspected with a longitudinal wave technique from both parallel surfaces.

S5.4 *Acceptance Criteria:*

S5.4.1 *Shear Wave* — Any material that produces indications equal to or larger than the response from the reference notch or higher than the straight line joining the two peak amplitudes shall be rejected.

S5.4.2 *Longitudinal Wave* — Any material that produces indications equal to or larger than the response from the reference hole or that produces a complete loss of back reflection shall be rejected. Material shall be tested using a square, rectangular, or circular transducer having an effective area of 1 $in.^2$ or less, but no dimension shall be smaller than the diameter of the reference hole. In the event of disagreement on the degree of back reflection loss, it shall be determined by the contact method using a 1- to $1\frac{1}{8}$-in. (25.4- to 28.6-mm) diameter transducer or one whose area falls within this range.

S5.4.3 *Reference Notch Removal* — If reference notches or flat-bottomed holes are made in the material to be tested, they shall be so located that their subsequent removal will not impair the suitability of the material for its intended use.

APPENDICES

(Nonmandatory Information)

X1. NOMINAL COMPOSITION AND RELATIVE FORGEABILITY RATINGS

X1.1 The nominal composition of the various forging materials are shown in Table X1.1.

X2. DIMENSIONAL TOLERANCES

X2.1 The data in Table X2.1 do not constitute a part of this specification. They are given merely to indicate to the purchaser the various forging types and some dimensional tolerances used on commercially designed hot-pressed forgings up to 2 lbs (0.91 kg) in weight. For tolerances applicable to heavier forgings, the manufacturers should be consulted.

X3. TYPICAL MECHANICAL PROPERTIES

X3.1 Mechanical properties of any forging are influenced by shape and size. Unless otherwise specified in the purchase order or specifically guaranteed by the manufacturer, acceptance of forgings under this specification shall not depend on the mechanical properties determined by tension or hardness tests. (Frequently, the design of forgings will not permit adequate test sections.) Therefore, the data in Table X3.1 do not constitute a part of

TABLE X1.1
NOMINAL COMPOSITIONS AND FORGEABILITY RATINGS

Copper or Copper Alloy UNS No.	Nominal Composition, %											Forgeability Rating[A]
	Copper	Lead	Tin	Iron	Nickel	Aluminum	Silicon	Manganese	Zinc	Sulfur	Tellurium	
C11000	100	...	...	...	...	...	...	...	...	...	...	65
C14500	99.45	...	...	...	...	...	...	...	...	...	0.55	65
C14700	99.5	...	...	...	...	...	...	...	...	0.35	...	65
C36500	60	0.6	...	...	...	...	...	...	39.4	...	...	...
C37700	60	2	...	...	...	...	...	...	38	...	...	100
C46400	60	...	0.8	...	...	...	...	...	39.2	...	...	90
C48200	60	0.7	0.8	...	...	...	...	...	38.5	...	...	...
C48500	60	1.8	0.8	...	...	...	...	...	37.4	...	...	90
C61900	87.5	...	...	3.5	...	9	...	...	...	...	...	75
C62300	88	...	...	3	...	9	...	...	...	...	...	75
C63000	81	...	...	3	5	10	...	1	...	...	...	75
C63200	81	...	...	4	4.5	9	...	1.5	...	...	...	75
C64200	91	...	...	...	...	7	2	...	...	...	...	75
C64210	91.3	...	...	...	...	6.7	2	...	...	...	...	75
C65500	96	...	...	[B]	...	...	3	[B]	[B]	...	...	40
C67500	58.5	...	1	1	...	...	...	0.10	39.4	...	...	80
C67600	58.5	0.75	1	0.8	...	...	...	0.10	39.6	...	...	80
C70620	86.5	...	...	1.4	10.0	...	...	1	...	...	...	75
C71520	65.0	...	...	0.7	31.0	...	...	1	...	...	...	40
C77400	45	...	...	...	10	...	...	...	45	...	...	85

[A] Relative forgeability rating takes into consideration such variable factors as pressure, die wear, and plasticity (hot). Since it is impracticable to reduce these variables to common units, calibration in terms of a percentage of the most generally used alloy, forging brass (100%), is considered the most practical basis for such ratings. The values shown represent the general opinion and are intended for information to enable the designer to better understand the forging characteristics of these various alloys. Intricate parts are more likely to be available in alloys having a high rating.

[B] One or more of these elements may be present as specified in Table 2.

TABLE X2.1
DIMENSIONAL TOLERANCES

	Tolerances, Plus and Minus, in. (mm) Except as Indicated[A]			
	Copper or Copper Alloy UNS Nos.			
Forging Types	C11000 C14500 C14700 C61900 C62300 C64200 C64210	C36500 C37700 C46400 C48200 C48500 C67500 C67600	C77400	C63000 C63200 C65500 C70620 C71520
Solid	0.010 (0.25)	0.008 (0.20)	0.008 (0.20)	0.012 (0.30)
Solid, with symmetrical cavity	0.010 (0.25)	0.008 (0.20)	0.008 (0.20)	0.012 (0.30)
Solid, with eccentric cavity	0.012 (0.30)	0.008 (0.20)	0.008 (0.20)	0.012 (0.30)
Solid, deep extrusion	0.012 (0.30)	0.010 (0.25)	0.010 (0.25)	0.014 (0.36)
Hollow, deep extrusion	0.012 (0.30)	0.010 (0.25)	0.010 (0.25)	0.014 (0.36)
Thin section, short (up to 6 in. (152 mm) incl.)	0.012 (0.30)	0.010 (0.25)	0.010 (0.25)	0.014 (0.36)
Thin section, long (over 6 in. (152 mm) to 14 in. (356 mm) incl.)	0.015 (0.38)	0.015 (0.38)	0.015 (0.38)	0.020 (0.51)
Thin section, round	0.012 (0.30)	0.010 (0.25)	0.010 (0.25)	0.014 (0.36)
Draft angles, outside and inside 1 to 5°	½°	½°	½°	½°
Machining allowance (on one surface)	1/32 (0.79)	1/32 (0.79)	1/32 (0.79)	1/32 (0.79)
Flatness (maximum deviation per inch)	0.005 (0.13)	0.005 (0.13)	0.005 (0.13)	0.005 (0.13)
Concentricity (total indicator reading)	0.030 (0.76)	0.020 (0.51)	0.030 (0.76)	0.030 (0.76)
Nominal web thickness:	5/32 (4.0)	1/8 (3.2)	1/8 (3.2)	3/16 (4.8)
Tolerance	1/64 (0.40)	1/64 (0.40)	1/64 (0.40)	1/64 (0.40)
Nominal fillet and radius:	3/32 (2.4)	1/16 (1.6)	1/16 (1.6)	1/8 (3.2)
Tolerance	1/64 (0.40)	1/64 (0.40)	1/64 (0.40)	1/64 (0.40)
Approximate flash thickness	1/16 (1.6)	3/64 (1.2)	3/64 (1.2)	5/64 (2.0)

[A] If tolerances all plus or all minus are desired, double the values given.

this specification, and are given for general information only. They are typical of forgings up to 2 lbs (0.91 kg) in weight.

X4. METRIC EQUIVALENTS

X4.1 The SI unit for strength properties now shown is in accordance with the International System of Units (SI). The derived SI unit for force is the newton (N), which is defined as that force which when applied to a body having a mass of one kilogram gives it an acceleration of one metre per second squared ($N = kg \cdot m/s^2$). The derived SI unit for pressure or stress is the newton per square metre (N/m^2), which has been named the pascal (Pa) by the General Conference on Weights and Measures. Since 1 ksi = 6 894 757 Pa, the metric equivalents are expressed as megapascal (MPa), which is the same as MN/m^2 and N/mm^2.

TABLE X3.1
TYPICAL MECHANICAL PROPERTIES OF FORGINGS AS HOT PRESSED, TEMPER M10, M11, OR TQ50[A]

Copper or Copper Alloy UNS No.	0.505-in. (128-mm) Diameter Test Section					Rockwell Hardness (Filed Surface, 1/8-in. (3.18-mm) Chord, min)	
	Tensile Strength		Yield Strength (0.5% Extension Under Load)		Elongation in 4 × Diameter, %	F Scale	B Scale
	ksi[B]	MPa[C]	ksi[B]	MPa[C]			
C11000	33	230	11	75	40	37	...
C14500	34	235	12	85	35	40	...
C14700	34	235	12	85	35	40	...
C36500	58	400	23	160	40	...	45
C37700	58	400	23	160	40	...	45
C46400	64	440	26	180	40	...	55
C48200	64	440	26	180	40	...	55
C48500	62	425	24	165	40	...	55
C61900	82	565	37	255	32	...	82
C62300	82	565	37	255	32	...	82
C63000	95	655	48	330	15	...	90
C63200	92	635	45	310	18	...	88
C64200	83	570	41	285	35	...	77
C64210	83	570	41	285	35	...	77
C65500	52	360	18	125	70	...	62
C67500	72	495	34	235	33	...	69
C67600	72	495	34	235	33	...	69
C71520	55	380	20	138	45	...	35
C77400	83	570	36	250	25	...	73

[A] For Copper Alloy UNS Nos. C63000 and C63200.
[B] ksi = 1000 psi
[C] See Appendix X4.

SPECIFICATION FOR ALUMINUM-ALLOY 6061-T6 STANDARD STRUCTURAL PROFILES

SB-308/SB-308M

(Identical with ASTM Specification B 308/B 308M-96 except for editorial differences. Certification has been made mandatory.)

1. Scope

1.1 This specification covers extruded 6061-T6 aluminum-alloy standard structural profiles.

1.2 The profiles are limited to I-beams, H-beams, channels, angles, tees, and zees.

NOTE 1 — For other extruded profiles in other alloys and tempers refer to Specification SB-221.

1.3 Alloy and temper designations are in accordance with ANSI H35.1 [ANSI H35.1M]. The equivalent Unified Numbering System alloy designation is that in Table 1 preceded by A9, or A96061 for alloy 6061 in accordance with Practice E 527.

1.4 For acceptance criteria for inclusion of new aluminum and aluminum alloys in this specification, see Annex A2.

1.5 The values stated in either inch-pound or SI units are to be regarded separately as standard. The SI units are shown in brackets. The values stated in each system are not exact equivalents; therefore, each system must be used independently of the other. Combining values from the two systems will result in nonconformance with the specification.

2. Referenced Documents

2.1 The following documents of the issue in effect on the date of material purchase form a part of this specification to the extent referenced herein:

2.1.1 *ASTM Standards*

B 557 Test Methods of Tension Testing Wrought and Cast Aluminum- and Magnesium-Alloy Products

B 557M Test Methods of Tension Testing Wrought and Cast Aluminum and Magnesium Alloy Products (Metric)

B 597 Practice for Heat Treatment of Aluminum Alloys

B 647 Test Method for Indentation Hardness of Aluminum Alloys by Means of a Webster Hardness Gage

B 648 Test Method for Indentation Hardness of Aluminum Alloys by Means of a Barcol Impressor

B 660 Practices for Packaging/Packing of Aluminum and Magnesium Products

B 666/B 666M Practice for Identification Marking of Aluminum Products

B 807 Practice for Extrusion Press Solution Heat Treatment for Aluminum Alloys

E 18 Test Methods for Rockwell Hardness and Rockwell Superficial Hardness of Metallic Materials

E 29 Practice for Using Significant Digits in Test Data to Determine Conformance With Specifications

E 34 Test Methods for Chemical Analysis of Aluminum and Aluminum Base Alloys

E 55 Practice for Sampling Wrought Nonferrous Metals and Alloys for Determination of Chemical Composition

E 101 Test Method for Spectrographic Analysis of Aluminum and Aluminum Alloys by the Point-to-Plane Technique

E 227 Test Method for Optical Emission Spectrometric Analysis of Aluminum and Aluminum Alloys by the Point-to-Plane Technique

E 527 Practice for Numbering Metals and Alloys (UNS)

E 607 Test Method for Optical Emission Spectrometric Analysis of Aluminum and Aluminum Alloys by the Point-to-Plane Technique, Nitrogen Atmosphere

E 716 Practices for Sampling Aluminum and Aluminum Alloys for Spectrochemical Analysis

E 1251 Test Method for Optical Emission Spectrometric Analysis of Aluminum and Aluminum Alloys by the Argon Atmosphere, Point-to-Plane, Unipolar Self-Initiating Capacitor Discharge

2.1.2 *ANSI Standards*

H35.1 Alloy and Temper Designation Systems for Aluminum

H35.1(M) Alloy and Temper Designation Systems for Aluminum (Metric)

H35.2 Dimensional Tolerances for Aluminum Mill Products

H35.2(M) Dimensional Tolerances for Aluminum Mill Products (Metric)

2.1.3 *Federal Standard*

Fed. Std. No. 123 Marking for Shipment (Civil Agencies)

2.1.4 *Military Specifications*

MIL-H-6088 Heat Treatment of Aluminum Alloys

MIL-STD-129 Marking for Shipment and Storage

3. Terminology

3.1 *Definitions*

3.1.1 *extruded structural profile* — a profile produced by hot extruding, commonly used for structural purposes but limited to profiles such as I-beams, H-beams, angles, channels, tees, and zees in certain standard alloys, tempers, and sizes

3.1.2 *producer* — the primary manufacturer of the material

3.1.3 *supplier* — includes only the category of jobbers and distributors as distinct from producers

4. Ordering Information

4.1 Orders for material to this specification shall include the following information:

4.1.1 this specification designation (which includes the number, the year, and the revision letter, if applicable;

NOTE 2 — For inch-pound orders specify B 308; for metric orders specify B 308M. Do not mix units.

4.1.2 quantity in pieces or pounds [kilograms];

4.1.3 alloy (Section 8);

4.1.4 temper (10.1 and Table 2); and

4.1.5 type of section (1.2), dimensions (including a drawing if necessary), and length.

4.2 Additionally, orders for material to this specification shall include the following information when required by the purchaser:

4.2.1 whether solution heat treatment at the extrusion press is unacceptable (9.2);

4.2.2 whether heat treatment in accordance with Practice B 597 is required (9.3);

4.2.3 whether inspection or witness of inspection and tests by the purchaser's representative is required prior to material shipment (Section 13);

4.2.4 whether marking for identification is required (Section 16) and whether marking of lot number is required (16.2); and

4.2.5 whether Practices B 660 applies and, if so, the applicable levels of preservation, packaging, and packing required (17.3).

5. Materials and Manufacture

5.1 The products covered by this specification shall be produced by hot extruding only.

6. Quality Assurance

6.1 *Responsibility for Inspection and Tests* — Unless otherwise specified in the contract or purchase order, the producer is responsible for the performance of all inspection and test requirements specified herein. The producer may use his own or any other suitable facilities for the performance of the inspection and test requirements specified herein, unless disapproved by the purchaser in the order or at the time of contract signing. The purchaser shall have the right to perform any of the inspections and tests set forth in this specification where such inspections are deemed necessary to ensure that material conforms to prescribed requirements.

6.2 *Lot Definition* — An inspection lot shall be defined as follows.

6.2.1 An inspection lot shall consist of an identifiable quantity of material of the same mill form, alloy, temper, and nominal dimensions traceable to a heat-treat lot or lots, and subjected to inspection at one time.

7. General Quality

7.1 Unless otherwise specified, the structural profiles shall be supplied in the mill finish and shall be uniform as defined by the requirements of this specification and shall be commercially sound. Any requirement not so covered is subject to negotiation between the producer and purchaser.

7.2 Each profile shall be examined to determine conformance to this specification with respect to general quality and identification marking. On approval of the purchaser, however, the producer or the supplier may use a system of statistical quality control for such examination.

TABLE 1
CHEMICAL COMPOSITION LIMITS
[NOTES (1), (2), (3)]

Alloy 6061	Composition, %
Silicon	0.40–0.8
Iron	0.7
Copper	0.15–0.40
Manganese	0.15
Magnesium	0.8–1.2
Chromium	0.04–0.35
Zinc	0.25
Titanium	0.15
Other elements, each	0.05
Other elements, total [Note (4)]	0.15
Aluminum	Remainder

NOTES:
(1) Where single units are shown, these indicate the maximum amounts permitted.
(2) Analysis shall regularly be made only for the elements specified in this Table. If, however, the presence of other elements is suspected or indicated in the course of routine analysis, further analysis shall be made to determine that these elements are not in excess of the amount specified.
(3) For purposes of determining conformance to these limits, an observed value or a calculated value obtained from analysis shall be rounded to the nearest unit in the last right-hand place of figures used in expressing the specified limit, in accordance with the rounding-off method of Practice E 29.
(4) Other Elements — Total shall be the sum of unspecified metallic elements 0.010% or more, rounded to the second decimal before determining the sum.

8. Chemical Composition

8.1 *Limits* — The structural profiles shall conform to the chemical composition limits specified in Table 1. Conformance shall be determined by the producer by analyzing samples taken at the time the ingots are poured, or samples taken from the finished or semifinished product. If the producer has determined the chemical composition of the material during the course of manufacture, he shall not be required to sample and analyze the finished product.

NOTE 3 — It is standard practice in the United States aluminum industry to determine conformance to the chemical composition limits prior to further processing of ingots into wrought products. Due to the continuous nature of the process, it is not practical to keep a specific ingot analysis identified with a specific quantity of finished material.

8.2 *Number of Samples* — The number of samples taken for determination of chemical composition shall be as follows.

8.2.1 When samples are taken at the time the ingots are poured, at least one sample shall be taken for each group of ingots poured simultaneously from the same source of molten metal.

8.2.2 When samples are taken from the finished or semifinished product, a sample shall be taken to represent each 4,000 lb [2,000 kg] or fraction thereof of material in the lot except that not more than one sample shall be required per piece.

8.3 *Methods of Sampling* — Samples for determination of chemical composition shall be taken in accordance with one of the following methods.

8.3.1 Samples for chemical analysis shall be taken from the material by drilling, sawing, milling, turning, or clipping a representative piece or pieces to obtain a weight of prepared sample not less than 75 g. Sampling shall be in accordance with Practice E 55.

8.3.2 Sampling for spectrochemical analysis shall be in accordance with Practices E 716. Samples for other methods of analysis shall be suitable for the form of material being analyzed and the type of analytical method used.

8.4 *Methods of Analysis* — The determination of chemical composition shall be made in accordance with suitable chemical (Test Methods E 34), or spectrochemical (Test Methods E 101, E 227, E 607, and E 1251) methods. Other methods may be used only when no published ASTM method is available. In case of dispute, the methods of analysis shall be agreed upon between the producer and purchaser.

9. Heat Treatment

9.1 Except as noted in 9.2, or otherwise specified in 9.3, producer or supplier heat treatment shall be in accordance with MIL-H-6088.

9.2 Material may be solution heat-treated and quenched at the extrusion press in accordance with Practice B 807.

9.3 When specified, heat treatment shall be in accordance with Practice B 597.

10. Tensile Properties

10.1 *Limits* — The structural profiles shall conform to the tensile requirements specified in Table 2.

10.1.1 The elongation requirements shall not be applicable to the following:

10.1.1.1 Material of such dimensions that a standard test specimen cannot be taken in accordance with Test Methods B 557 [B 557M] and of such profile that it cannot be satisfactorily tested in full section; and

10.1.1.2 Material less than 0.062 in [up through 1.60 mm] in thickness.

TABLE 2
TENSILE PROPERTY LIMITS [NOTES (1), (2)]

6061-T6	
Tensile strength, min., ksi [MPa]	38.0 [260]
Yield strength, min., ksi [MPa]	35.0 [240]
Elongation [Note (3)], min., %	
In 2 in. [50 mm]	10 [10] [Note (4)]
In 4*D* [5*D* or 5.65 $\sqrt{A}$]	10 [9]

NOTES:
(1) For purposes of determining conformance with this specification, each value for tensile strength and yield strength shall be rounded to the nearest 0.1 ksi [1 MPa], and each value for elongation shall be rounded to the nearest 0.5%, both in accordance with the rounding method of Practice E 29.
(2) The basis for mechanical property limits is given in Annex A1.
(3) Elongations in 2 in. [50 mm] apply for profiles tested in full section and for sheet-type specimens machined from material up through 0.500 in. [12.5 mm] in thickness having parallel surfaces. Elongations in 4*D* [5*D* or 5.65 $\sqrt{A}$)], where *D* and *A* are diameter and cross-sectional area of the specimen, respectively, apply to round test specimens machined from thicknesses over 0.250 in. [6.30 mm].
(4) For thicknesses less than 0.250 in. [up through 6.30 mm], the minimum elongation is 8%.

10.2 *Number of Specimens*

10.2.1 For material having a nominal weight of less than 1 lb/linear ft [up through 1.7 kg/linear m], one tension test specimen shall be taken for each 1,000 lb [500 kg] or fraction thereof in the lot.

10.2.2 For material having a nominal weight of 1 lb or more/linear ft [over 1.7 kg/linear m], one tenstion test specimen shall be taken for each 1,000 ft [300 m] or fraction thereof in the lot.

10.2.3 Other procedures for selecting samples may be employed if agreed upon by the producer and the purchaser.

10.3 *Test Specimens*

10.3.1 *Tension Specimens* — Tension test specimens shall conform to Test Methods B 557 [B 557M].

10.4 *Test Method*

10.4.1 *Tension Tests* — The tension test shall be made in accordance with Test Methods B 557 [B 557M].

11. Quality Assurance Screening of Extrusion Press Heat-Treated Profiles

11.1 For 6061-T6 profiles that are manufactured by quenching at the extrusion press, the requirements of this section shall apply in addition to all other applicable requirements of this specification. Hardness tests shall be performed either on each extruded charge or on a sample selected in accordance with a sampling plan as specified on purchase orders. The minimum hardness control value shall be in accordance with Table 3 for the type of hardness tester used. The specific type of hardness tester used shall be the producer's choice. The test shall be conducted in accordance with the applicable hardness test standard, namely Test Method B 647 for Webster hardness, Test Method B 648 for Barcol hardness, or Test Methods E 18 for Rockwell E hardness.

11.2 Individual extruded charges that fail to conform to the requirements of Table 3 may be accepted provided the two pieces in the lot having the two lowest hardness readings are tension-tested and found to conform to the requirements of Table 2.

12. Dimensional Tolerances

12.1 Variations from the specified nominal dimensions shall not exceed the permissible variations prescribed in the following tables of ANSI H35.2 [ANSI H35.2M]:

Table No.	Title
10.1	Cross-Sectional Dimensions
10.2	Length
10.3	Straightness
10.4	Twist
10.5	Flatness (Flat Surfaces)
10.7	Surface Roughness
10.9	Squareness of Cut Ends
10.10	Corner and Fillet Radii
10.11	Angularity

13. Source Inspection

13.1 If the purchaser desires that his representative inspect or witness the inspection and testing of the material prior to shipment, such agreement shall be made by the purchaser and producer as part of the purchase contract.

13.2 When such inspection or witness of inspection and testing is agreed upon, the producer shall afford the purchaser's representative all reasonable facilities to satisfy him that the material meets the requirements of this specification. Inspection and tests shall be conducted so there is no unnecessary interference with the producer's operations.

14. Rejection and Retest

14.1 If any material fails to conform to all of the applicable requirements of this specification, it shall be cause for rejection of the inspection lot.

TABLE 3
HARDNESS SCREENING VALUES [NOTES (1), (2), (3)]

Thickness		Hardness Number, Min.		
in.	mm	Webster	Barcol	Rockwell E
0.050 thru 0.075	Over 1.20 thru 2.00	15	76	89
0.076 thru 0.499	Over 2.00 thru 12.50	15	76	90
0.500 and over	Over 12.50	...	76	...

NOTES:
(1) See Section 11.
(2) Alternate minimum hardness values and hardness testing devices may be used provided that agreement is reached between the purchaser and the supplier or producer.
(3) The hardness values shown do not guarantee material will pass the applicable mechanical property requirements but are for informational purposes only. It is the responsibility of the user of this specification to establish the relationship between the hardness values and tensile properties.

14.2 When there is evidence that a failed specimen was not representative of the inspection lot and when no other sampling plan is provided or approved by the purchaser through the contract or purchase order, at least two additional specimens shall be selected to replace each test specimen that failed. All specimens so selected for retest shall meet the requirements of the specification or the lot shall be subject to rejection.

14.3 Material in which defects are discovered subsequent to inspection may be rejected.

14.4 If material is rejected by the purchaser, the producer or supplier is responsible only for replacement of the material to the purchaser. As much as possible of the rejected material shall be returned to the producer or supplier.

15. Certification

15.1 The producer or supplier shall furnish to the purchaser a certificate stating that each lot has been sampled, tested, and inspected in accordance with this specification, and has met the requirements.

16. Identification Marking of Product

16.1 When marking for identification is required (see 4.2.5), all material shall be marked in accordance with Practice B 666 [B 666M].

16.2 In addition, when specified, the material shall also be marked with the lot number in at least one location on each piece.

17. Packaging and Package Marking

17.1 The material shall be packaged to provide adequate protection during normal handling and transportation, and each package shall contain only one size, alloy, and temper of material unless otherwise agreed upon. The type of packaging and gross weight of containers shall, unless otherwise agreed upon, be at the producer's discretion, provided that they are such as to ensure acceptance by common or other carriers for safe transportation at the lowest rate to the delivery point.

17.2 Each shipping container shall be marked with the purchase order number, material size, specification number, alloy and temper, gross and net weights, and the producer's name or trademark.

17.3 When specified in the contract or purchase order, material shall be preserved, packaged, and packed in accordance with the requirements of Practices B 660. The applicable levels shall be as specified in the contract or order. Marking for shipment of such material shall be in accordance with Fed. Std. No. 123 for civil agencies and MIL-STD-129 for military agencies.

18. Keywords

18.1 aluminum alloy; standard structural profiles

ANNEXES

(Mandatory Information)

A1. BASIS FOR INCLUSION OF PROPERTY LIMITS

A1.1 Limits are established at a level at which a statistical evaluation of the data indicates that 99% of the population obtained from all standard material meets the limit with 95% confidence. For the products described, mechanical property limits for the respective size ranges are based on the analyses of at least 100 data from a given lot. All tests are performed in accordance with the appropriate ASTM test methods. For informational purposes, refer to "Statistical Aspects of Mechanical Property Assurance" in the Related Material section of the *Annual Book of ASTM Standards,* Vol 02.02. Mechanical property limits in SI units were derived from the inch-pound system limits that were developed under the above principles. As test data on metric dimensioned specimens are accumulated, some refinement of limits, particularly for elongations measured in 5D, can be anticipated.

A2. ACCEPTANCE CRITERIA FOR INCLUSION OF NEW ALUMINUM AND ALUMINUM ALLOYS IN THIS SPECIFICATION

A2.1 Prior to acceptance for inclusion in this specification, the composition of wrought or cast aluminum or aluminum alloy shall be registered in accordance with ANSI H35.1 or H35.1(M). The Aluminum Association holds the Secretariat of ANSI H35 Committee and administers the criteria and procedures for registration.

A2.2 If it is documented that the Aluminum Association could not or would not register a given composition, an alternative procedure and the criteria for acceptance shall be as follows.

A2.2.1 The designation submitted for inclusion does not utilize the same designation system as described in ANSI H35.1 or H35.1(M). A designation not in conflict with other designation systems or a trade name is acceptable.

A2.2.2 The aluminum or aluminum alloy has been offered for sale in commercial quantities within the prior twelve months to at least three identifiable users.

A2.2.3 The complete chemical composition limits are submitted.

A2.2.4 The composition is, in the judgment of the responsible subcommittee, significantly different from that of any other aluminum or aluminum alloy already in the specification.

A2.2.5 For codification purposes, an alloying element is any element intentionally added for any purpose other than grain refinement and for which minimum and maximum limits are specified. Unalloyed aluminum contains a minimum of 99.00% aluminum.

A2.2.6 Standard limits for alloying elements and impurities are expressed to the following decimal places:

Less than 0.001%	0.000X
0.001 to but less than 0.01%	0.00X
0.01 to but less than 0.10%	
Unalloyed aluminum made by a refining process	0.0XX
Alloys and unalloyed aluminum not made by a refining process	0.0X
0.10 through 0.55%	0.XX
(It is customary to express limits of 0.30 through 0.55% as 0.X0 or 0.X5.)	
Over 0.55%	0.X, X.X, etc.
(except that combined Si+Fe limits for 99.00% minimum aluminum must be expressed as 0.XX or 1.XX)	

A2.2.7 Standard limits for alloying elements and impurities are expressed in the following sequence: Silicon; Iron; Copper; Manganese; Magnesium; Chromium; Nickel; Zinc (Note A2.1); Titanium; Other Elements, Each; Other Elements, Total; Aluminum (Note A2.2).

NOTE A2.1 — Additional specified elements having limits are inserted in alphabetical order of their chemical symbols between zinc and titanium, or are specified in footnotes.

NOTE A2.2 — Aluminum is specified as *minimum* for unalloyed aluminum and as a *remainder* for aluminum alloys.

SPECIFICATION FOR SEAMLESS COPPER ALLOY PIPE AND TUBE

SB-315

(Identical with ASTM Specification B 315-93 for the alloy and temper covered except for the editorial differences. Certification and 100% hydrostatic testing has been made mandatory.)

1. Scope

1.1 This specification covers seamless copper alloy pipe in nominal or standard pipe size, both regular and extra-strong, and seamless tube in straight lengths for general engineering purposes. Pipe and tube are commercially available in the following alloy:

Copper Alloy UNS No.[A]	Previously Used Designation
C65500	High-Silicon Bronze A

[A] The UNS system for copper and copper alloys (see Recommended Practice E 527) is a simple expansion of the former standard designation system accomplished by the addition of a prefix "C" and a suffix "00." The suffix can be used to accommodate composition variations of the base alloy.

1.2 The values stated in inch-pound units are to be regarded as the standard. The values given in parentheses are for information only.

2. Referenced Documents

2.1 The following documents of the issue in effect on date of material purchase form a part of this specification to the extent referenced herein:

2.1.1 *ASTM Standards:*

B 601 Practice for Temper Designations for Copper and Copper Alloys — Wrought and Cast

E 8 Methods of Tension Testing of Metallic Materials

E 18 Test Methods for Rockwell Hardness and Rockwell Superficial Hardness of Metallic Materials

E 29 Recommended Practice for Indicating Which Places of Figures Are to Be Considered Significant in Specified Limiting Values

E 54 Methods for Chemical Analysis of Special Brasses and Bronzes

E 55 Practice for Sampling Wrought Nonferrous Metals and Alloys for Determination of Chemical Composition

E 243 Practice for Electromagnetic (Eddy-Current) Testing of Seamless Copper and Copper-Alloy Tubes

E 527 Practice for Numbering Metals and Alloys

3. Terminology

3.1 *Definitions:*

3.1.1 *tube* — a hollow product of round or any other cross section having a continuous periphery.

3.1.1.1 *tube, seamless* — a tube produced with a continuous periphery in all stages of the operations.

3.1.1.2 *pipe* — a seamless tube conforming to the particular dimensions commercially known as Nominal or Standard Pipe Sizes, Table 3.

3.1.2 *average diameter (for round tubes only)* — the average of the maximum and minimum outside diameters, or maximum and minimum inside diameters, whichever is applicable, as determined at any one cross section of the tube.

3.1.3 *lengths* — straight pieces of the product.

3.1.3.1 *ends* — straight pieces, shorter than the nominal length, left over after cutting the product into mill lengths, stock lengths, or specific lengths. They are subject to minimum length and maximum weight requirements.

3.1.3.2 *specific* — straight lengths that are uniform in length, as specified, and subject to established length tolerances.

3.1.3.3 *specific with ends* — specific lengths, including ends.

3.1.3.4 *stock* — straight lengths that are mill cut and stored in advance of orders. They are usually 10, 12, or 20 ft (3.05, 3.66, or 6.10 m) and subject to established length tolerances.

3.1.3.5 *stock with ends* — stock lengths, including ends.

3.2 *Description of Term Specific to This Standard:*

3.2.1 *capable of* — the term "capable of" in this specification means that the test need not be performed by the producer of the material. However, should subsequent testing by the purchaser establish that the material does not meet these requirements, the material shall be subject to rejection.

4. Ordering Information

4.1 Orders for material under this specification shall include the following information:

4.1.1 Alloy (Section 6, Table 1),

4.1.2 Temper (Section 7),

4.1.3 Pipe size (regular or extra-strong) (see 10.2), or tube dimensions (diameter and wall thickness) (see 10.3 and 10.4),

4.1.4 Length (see 10.5),

4.1.5 Total length of each size,

4.1.6 Whether the product is to be subsequently welded, and

4.1.7 Finish (see 11.2), and

4.2 In the case of material to be used for welding or brazing, orders shall specify "Specially Cleaned."

4.3 Mill Test Report, if required (see Section 20).

5. Material and Manufacture

5.1 The material shall be of such quality and purity that the finished product shall have the properties and characteristics prescribed in this specification.

5.2 The material shall be produced by either hot- or cold-working operations, or both. It shall be finished, unless otherwise specified, by such cold working and annealing or heat treatment as may be necessary to meet the properties specified.

6. Chemical Composition

6.1 The material shall conform to the chemical requirements specified in Table 1.

TABLE 1
CHEMICAL REQUIREMENTS

Composition, % Max (Unless Shown as a Range or Minimum)	
Element	C65500
Copper[A]	remainder
Lead	0.05
Iron	0.8
Zinc	1.5
Aluminum	. . .
Manganese	0.50–1.3
Silicon	2.8–3.8
Nickel[B]	0.6
Phosphorus	. . .

[A] Including silver.
[B] Including cobalt.

6.2 These specification limits do not preclude the presence of other elements. Limits for unnamed elements may be established by agreement between manufacturer or supplier and purchaser.

6.2.1 For copper alloys in which copper is specified as the remainder, copper may be taken as the difference between the sum of all the elements analyzed and 100%.

6.2.1.1 When all the elements in Table 1 are analyzed, their sum shall be as shown in the following table.

Copper Alloy UNS No.	Copper Plus Named Elements, % Min.
C65500	99.5

7. Temper

7.1 Copper Alloy UNS No. C65500 shall be furnished in the extruded and annealed (O30), or cold-worked and annealed condition (O61). Copper Alloy UNS No. C65500, which is supplied in the cold-worked and annealed condition (O61) shall show complete recrystallization.

8. Tensile Requirements

8.1 The material shall conform to the requirements of Table 2 as the tensile properties.

9. Nondestructive Testing

9.1 The pipe or tube may be tested, in the final drawn, annealed, or specified temper or in the drawn temper prior to the final anneal, unless otherwise agreed upon between the supplier and the purchaser. Unless otherwise specified, the manufacturer shall have the option of testing the pipe by one of the following tests:

TABLE 2
TENSILE REQUIREMENTS

Copper Alloy UNS No. C65500	
Temper	Annealed
Tensile strength, min, ksi[A]	50
Yield strength, at 0.5% extension under load, ksi[A]	15 to 29
Elongation in 2 in., min. %	35

[A] ksi = 1000 psi.

9.1.1 *Eddy-Current Test* — Each tube, and each pipe in nominal orstandard sizes from 1/8 in. (3.18 mm) up to and including 2 1/2 in. (63.5 mm) regular and extra strong, shall be subjected to an eddy-current test. Testings shall follow the procedures of Recommended Practice E 243 except for the determination of "end-effect." The pipe or tube shall be passed through an eddy-current testing unit adjusted to provide information on the suitability of each piece for the intended application.

9.1.1.1 Notch-depth standards, rounded to the nearest 0.001 in. (0.025 mm), shall be 10% of the wall thickness. Notch-depth tolerances shall be ±0.0005 in. (0.013 mm). Alternatively, when a manufacturer uses speed-insensitive equipment that can select a maximum unbalance signal, a maximum unbalance signal of 0.3% may be used.

9.1.1.2 Pipe or tubes that do not activate the signalling device of the eddy-current tester shall be considered as conforming to the requirements of this test. Lengths with discontinuities indicated by the testing unit may, at the option of the manufacturer, be reexamined or retested to determine whether the discontinuity is cause for rejection. Signals that are found to have been caused by minor mechanical damage, soil, or moisture, shall not be cause for rejection provided the pipe or tube dimensions are still within prescribed limits and the pipe or tube is suitable for its intended application.

9.1.2 *Pressure Tests* — Each pipe or tube selected in accordance with 13.3 shall withstand the pressure test of 9.1.2.1 or 9.1.2.2.

9.1.2.1 *Hydrostatic Test* — Each pipe or tube shall stand, without showing evidence of leakage, an internal hydrostatic pressure sufficient to subject the material to a fiber stress of 7000 psi (48 MPa), determined by the following equation for thin hollow cylinders under tension. The pipe or tube need not be tested at a hydrostatic pressure of over 1000 psi (6.9 MPa), unless so specified. At the option of the manufacturer, annealed pipe with wall thickness up to 0.083 in (2.11 mm) inclusive may be tested in the drawn condition, prior to annealing.

$$P = 2St/(D - 0.8t)$$

where:

P = hydrostatic pressure, psi (MPa),
t = thickness of the pipe or tube wall, in. (mm),
D = outside diameter of the pipe, in. (mm), and
S = allowable fiber stress of the material psi (MPa).

9.1.2.2 *Pneumatic Test* — Each pipe or tube shall stand an internal air pressure of 60 psi (415 kPa), min., for 5 s without showing evidence of leakage. The test method used shall permit easy visual detection of any leakage, such as by having the tube under water or by pressure differential method.

10. Dimensions, Weights, and Permissible Variations

10.1 *General:*

10.1.1 The standard method of specifying wall thickness shall be in decimal fractions of an inch.

10.1.2 For the purpose of determining conformance with the dimensional requirements prescribed in this specification, any measured value outside the specified limiting values for any dimension may be cause for rejection.

10.1.3 Tolerances on a given tube may be specified with respect to any two, but not all three, of the following: outside diameter, inside diameter, wall thickness.

NOTE 1 — Blank spaces in the tolerance tables indicate either that the material is not generally available or that no tolerances have been established.

10.2 *Dimensions* — Dimensions and theoretical weights of nominal or standard pipe sizes shall be in accordance with Table 3.

10.3 *Wall Thickness Tolerances* — Wall thickness tolerances shall be in accordance with Table 4. Wall thickness tolerances for tube shall be in accordance with Table 5.

10.4 *Diameter Tolerances* — Diameter tolerances for pipe shall be as follows:

10.4.1 *Nominal or Standard Pipe Size 1 1/2 in. (38.1 mm) and Under* — +0.016, –0.031 in. (+0.40, –0.79 mm).

10.4.2 *Nominal or Standard Pipe Size Over 1 1/2 in.* — ±1% of specified diameter.

10.4.3 The dimensional limits of nominal or standard pipe sizes are shown in Table 4.

TABLE 3
DIMENSIONS AND WEIGHTS OF COPPER ALLOY PIPE, NOMINAL OR STANDARD PIPE SIZES

Nominal or Standard Pipe Size, in.	Dimension, in.			Theoretical Weight lb/ft	
	Outside Diameter	Inside Diameter	Wall Thickness	Cross-Section Area of Bore, in.^{2}	Copper Alloy UNS No. C65500
			Regular		
1/8	0.405	0.269	0.068	0.057	0.266
1/4	0.540	0.364	0.088	0.104	0.462
3/8	0.675	0.493	0.091	0.191	0.617
1/2	0.840	0.622	0.109	0.304	0.925
3/4	1.050	0.824	0.113	0.533	1.23
1	1.315	1.049	0.133	0.864	1.83
1 1/4	1.660	1.380	0.140	1.496	2.47
1 1/2	1.900	1.610	0.145	2.036	2.95
2	2.375	2.067	0.154	3.356	3.97
2 1/2	2.875	2.469	0.203	4.788	6.30
3	3.500	3.068	0.216	7.393	8.24
3 1/2	4.000	3.548	0.226	9.887	9.90
4	4.500	4.026	0.237	12.730	11.7
5	5.562	5.046	0.258	19.998	15.9
6	6.625	6.065	0.280	28.890	20.6
8	8.625	7.981	0.322	50.030	31.0
10	10.750	10.020	0.365	78.8	44.1
12	12.750	12.000	0.375	113.0	53.9
			Extra Strong		
1/8	0.405	0.215	0.095	0.036	0.342
1/4	0.540	0.302	0.119	0.072	0.582
3/8	0.675	0.423	0.126	0.141	0.803
1/2	0.840	0.546	0.147	0.234	1.183
3/4	1.050	0.742	0.154	0.432	1.60
1	1.315	0.957	0.179	0.719	2.36
1 1/4	1.660	1.278	0.191	1.283	3.26
1 1/2	1.900	1.500	0.200	1.767	3.95
2	2.375	1.939	0.218	2.953	5.46
2 1/2	2.875	2.323	0.276	4.238	8.33
3	3.500	2.900	0.300	6.605	11.1
3 1/2	4.000	3.364	0.318	8.888	13.6
4	4.500	3.826	0.337	11.497	16.3
5	5.562	4.812	0.375	18.186	22.6
6	6.625	5.761	0.432	26.067	31.1
8	8.625	7.625	0.500	45.664	47.2
10	10.750	9.750	0.500	74.7	59.5

TABLE 4
DIMENSIONAL LIMITS FOR NOMINAL OR STANDARD PIPE SIZES
COPPER ALLOY UNS NO. C65500

Nominal or Standard Pipe Size	Outside Diameter, in.			Regular			Extra Strong		
		Min	Max	Wall Thickness, in.	Min	Max	Wall Thickness, in.	Min	Max
1/8	0.405	0.374	0.421	0.068	0.065	0.083	0.095	0.090	0.123
1/4	0.540	0.509	0.556	0.088	0.084	0.102	0.119	0.107	0.144
3/8	0.675	0.644	0.691	0.091	0.086	0.103	0.126	0.120	0.146
1/2	0.840	0.809	0.856	0.109	0.104	0.122	0.147	0.140	0.166
3/4	1.050	1.019	1.066	0.113	0.107	0.124	0.154	0.146	0.171
1	1.315	1.284	1.331	0.133	0.126	0.145	0.179	0.170	0.196
1 1/4	1.660	1.629	1.676	0.140	0.133	0.151	0.191	0.181	0.207
1 1/2	1.900	1.869	1.916	0.145	0.138	0.156	0.200	0.190	0.216
2	2.375	2.351	2.399	0.154	0.146	0.164	0.218	0.207	0.233
2 1/2	2.875	2.846	2.904	0.203	0.193	0.217	0.276	0.262	0.295
3	3.500	3.465	3.535	0.216	0.205	0.230	0.300	0.285	0.321
3 1/2	4.000	3.960	4.040	0.226	0.215	0.240	0.318	0.302	0.340
4	4.500	4.455	4.545	0.237	0.225	0.252	0.337	0.320	0.360
5	5.562	5.506	5.618	0.258	0.245	0.275	0.375	0.356	0.400
6	6.625	6.559	6.691	0.280	0.266	0.298	0.432	0.410	0.461
8	8.625	8.539	8.711	0.322	0.299	0.349	0.500	0.465	0.544
10	10.750	10.643	10.858	0.365	0.336	0.400	0.500	0.460	0.548
12	12.750	12.623	12.878	0.375	0.345	0.410	...	...	...

TABLE 5
WALL THICKNESS TOLERANCES FOR COPPER ALLOY UNS NO. C65500 TUBE (NOT APPLICABLE TO PIPE)

	Outside Diameter,[A] in.						
Wall Thickness, in.	1/32 to 1/8 incl	Over 1/8 to 5/8 incl	Over 5/8 to 1 incl	Over 1 to 2 incl	Over 2 to 4 incl	Over 4 to 7 incl	Over 7 to 10 incl
Up to 0.017 incl	0.0025	0.0015	0.002	0.0025	...	...	...
Over 0.017 to 0.024 incl	0.004	0.0025	0.0025	0.003	...	...	...
Over 0.024 to 0.034 incl	0.004	0.003	0.003	0.004	0.005	...	...
Over 0.034 to 0.057 incl	0.004	0.001	0.0045	0.0045	0.0065	0.009	...
Over 0.057 to 0.082 incl	...	0.0045	0.005	0.005	0.0075	0.010	0.013
Over 0.082 to 0.119 incl	...	0.005	0.0065	0.0065	0.009	0.011	0.014
Over 0.119 to 0.164 incl	...	0.007	0.007	0.0075	0.010	0.013	10.015
Over 0.164 to 0.219 incl	...	...	0.009	0.010	0.012	0.015	0.018
Over 0.219 to 0.283 incl	...	...	0.012	0.013	0.015	0.018	0.020
Over 0.283 to 0.379 incl	...	...	...	6[B]	6[B]	8[B]	8[B]
Over 0.379	...	...	...	6[B]	6[B]	8[B]	8[B]

NOTE — *Maximum deviation of any point:* The above tolerances are plus and minus; if tolerances all plus or all minus are desired, double the values given.

[A] When tube is ordered by outside and inside diameters, the maximum plus and minus deviation of the wall thickness from the nominal at any point shall not exceed the values given in this table by more than 50%.

[B] Percent of the specified wall thickness expressed to the nearest 0.001 in.

10.4.4 Diameter tolerances for tube shall be in accordance with Table 6.

10.5 *Length Tolerances:*

10.5.1 Length tolerances shall be in accordance with Table 7.

10.5.2 *Schedule of Tube Lengths* — Specific and stock lengths with ends shall be in accordance with Table 8.

10.6 *Squareness of Cut* — For pipe and tube in straight lengths, the departure from squareness of the end of any pipe or tube shall not exceed the following:

10.6.1 *Pipe:*

Outside Diameter, in. (mm)	Tolerance
Up to 5/8 (15.9) incl	0.010 in. (0.25 mm)
Over 5/8 (15.9)	0.016 in./in. (0.016 mm/mm) of diameter

10.6.2 *Tube:*

Outside Diameter, in. (mm)	Tolerance
Up to 5/8 (15.9) incl	0.010 in. (0.25 mm)
Over 5/8 (15.9)	0.016 in./in. (0.016 mm/mm) of diameter

10.7 The density of the material covered by this specification shall be taken to be as follows:

Copper Alloy UNS No.	Density, lb/in.^{3}
C65500	0.308

11. Workmanship, Finish, and Appearance

11.1 The material shall be free from defects of a nature that interfere with normal commercial applications and shall be free of heavy oxides and dirt.

11.2 Copper Alloy UNS No. 65500 may be supplied in the following finishes:

11.2.1 *Specially Cleaned* — Commercially free of all oxides, this material has the golden color of the alloy. It is intended for brazing and welding operations.

11.2.2 Plain pickled, or with dull iridescent film on both the inside and outside surfaces. Plain pickled material normally has a brick red color with cuprous and silicon oxides still adherent.

12. Sampling

12.1 *Sampling* — The lot size, portion size, and selection of pieces shall be as follows:

12.1.1 *Lot Size* — For tube, the lot size shall be 10,000 lb or fraction thereof. For pipe, the lot size shall be as follows:

TABLE 6
AVERAGE DIAMETER TOLERANCES FOR TUBE (NOT APPLICABLE TO PIPE)

Copper Alloy UNS No.	C65500
Specified Diameter, in.	Tolerance ± in.[A]
Up to 1/8 incl	0.003[B]
Up to 1/8 incl	0.0025[C]
Over 1/8 to 5/8 incl	0.0025
Over 5/8 to 1 incl	0.003
Over 1 to 2 incl	0.004
Over 2 to 3 incl	0.005
Over 3 to 4 incl	0.006
Over 4 to 5 incl	0.008
Over 5 to 6 incl	0.009
Over 6 to 8 incl	0.010
Over 8 to 10 incl	0.013

[A] Tolerance applies to inside or outside diameters, except as noted.
[B] On inside diameter.
[C] On outside diameter.

Nominal or Standard Pipe Size, in.	Lot Weight, lb
Up to 4, incl	10,000 (4550) or fraction thereof
Over 4	40,000 (18,100) or fraction thereof

12.1.2 *Portion Size* — Sample pieces shall be taken for test purposes from each lot according to the following schedule:

Number of Pieces in Lot	Number of Sample Pieces to Be Taken
1 to 50	1
51 to 200	2
201 to 1500	3
Over 1500	0.2% of total number of pieces in the lot

13. Number of Tests and Retests

13.1 *Chemical Analysis* — Samples for chemical analysis shall be taken in accordance with Method E 55. Drillings, millings, etc., shall be taken in approximately equal weight from each of the sample pieces selected in accordance with 12.1.2 and combined into one composite sample. The minimum weight of the composite sample that is to be divided into three equal parts shall be 150 g.

13.1.1 Instead of sampling in accordance with Method E 55, the manufacturer shall have the option of determining conformance to chemical composition as follows: Conformance shall be determined by the manufacturer by analyzing samples taken at the time the castings are poured or samples taken from the semi-finished

TABLE 7
LENGTH TOLERANCES

Length	Tolerances in., Applicable Only to Full Length Pieces: Outside Diameters up to 1 in. incl	Outside Diameters over 1 in. to 4 in. incl	Outside Diameters over 4 in.
Specific lengths:			
Up to 6 in. incl	1/32	1/16	...
Over 6 in to 2 ft incl	1/16	3/32	1/8
Over 2 ft to 6 ft incl	3/32	1/8	1/4
Over 6 ft to 14 ft incl	1/4	1/4	1/4
Over 14 ft	1/2	1/2	1/2
Specific lengths with ends	1	1	1
Stock lengths with or without ends	1[A]	1[A]	1[A]

NOTE — *Tolerances are all plus:* If all minus tolerances are desired, use the same value; if tolerances plus and minus are desired, halve the values given.

[A] As stock lengths are cut and placed in advance or orders, departure from this tolerance is not practicable.

TABLE 8
SCHEDULE OF TUBE LENGTHS (SPECIFIC AND STOCK) WITH ENDS

Outside Dimensions, in.	Specific Length, ft	Shortest Permissible Length,[A] % of Specific Length	Maximum Permissible Weight of Ends, % of Lot Weight
Up to 1 incl	6 to 20 incl	70	20
Over 1 to 2 incl	6 to 20 incl	60	25
Over 2 to 3 incl	6 to 20 incl	55	30
Over 3 to 4 incl	6 to 20 incl	50	40

[A] Expressed to nearest 1/3 ft.

product. If the manufacturer determines the chemical composition of the material during the course of manufacture, he shall not be required to sample and analyze the finished product. The number of samples taken for determination of chemical composition shall be as follows:

13.1.1.1 When samples are taken at the time the castings are poured, at least one sample shall be taken for each group of castings poured simultaneously from the same source of molten metal.

13.1.1.2 When samples are taken from the semi-finished product, a sample shall be taken to represent each 10,000 lb (4550 kg) or fraction thereof for all tube and for pipe sizes up to 4 in. (101.6 mm) inclusive and 40,000 lb (18,100 kg) for pipe sizes over 4 in., except that not more than one sample shall be required per piece.

13.1.1.3 Due to the discontinuous nature of the processing of castings into wrought products, it is not practical to identify specific castings analysis with a specific quantity of finished material.

13.1.1.4 In the event that heat identification or traceability is required, the purchaser shall specify the details desired.

13.2 *Tension Tests* — For the tension tests, a specimen shall be taken from each of the pieces selected in accordance with 12.1. The required tension test shall be made on each of the specimens so selected.

13.3 *Pressure Tests* — For the purpose of pressure testing only, a number of lengths of pipe or tube to be tested as described in 9.1.2 shall be randomly selected from the lot as follows:

Number of Pipe or Tubes	
Lot Size	Sample Size
1–8	5
9–50	7
51–150	20
151–280	32
281–500	50
501–1200	80
1201–3200	125

13.4 *Retests:*

13.4.1 If any test specimen shows defective machining or develops flaws, it may be discarded and another specimen sutstituted.

13.4.2 If the percentage elongation of any tension test specimen is less than that specified and any part of the fracture is outside the middle two thirds of the gage length or in a punched or scribed mark within the reduced section, a retest shall be allowed.

13.4.3 If the results of any test made to determine the physical properties fail to meet the specified limits, this test shall be repeated on each of two additional specimens taken from different pieces and the results of both of these tests shall comply with the specified requirements.

13.4.4 If the chemical analysis fails to conform to the specified limits, analysis shall be made on a new composite sample prepared from additional pieces selected in accordance with 11.1. The results of this retest shall comply with the specified requirements.

13.4.5 If any test specimen representing a lot fails to conform to the requirements of 9.1.2, two additional specimens, at the option of the manufacturer, may be taken as before, and submitted for check analysis or subjected to any tests in which the original specimen failed, but each of these specimens shall conform to the requirements specified.

14. Test Methods

14.1 The properties enumerated in this specification shall, in case of disagreement, be determined in accordance with the following applicable methods of the American Society for Testing and Matierals:

Test	ASTM Designation
Chemical analysis	E 54
Tension test	E 8

(See also 14.2, 14.3, and 14.4)

14.2 Tension test specimens shall be of the full section of the tube and shall conform to the requirements of Specimens for Pipe and Tube section of Methods E 8, unless the limitations of the testing machine preclude the use of such a specimen. Test specimens conforming to type No. 1 of Fig. 13 of Methods E 8 may be used when a full-section specimen cannot be tested.

14.3 Whenever tension test results are obtained from both full-size and from machined test specimens and they differ, the results obtained from full-size test specimens shall be used to determine conformance to the specification requirements.

14.4 Tension test results on material covered by this specification are not seriously affected by variations in speed of testing. A considerable range of testing speed is permissible; however, the rate of stressing to the yield strength should not exceed 100 ksi/min. (690 MPa/min.). Above the yield strength the movement per minute of the testing machine head under load should not exceed 0.5 in./in. (0.5 mm/mm) of gage length (or distance between grips for full-section specimens).

15. Significance of Numerical Limits

15.1 For purposes of determining compliance with the specified limits for requirements of the properties listed in the following table, an observed value or a calculated value shall be rounded as indicated in accordance with the rounding method of Recommended Practice E 29.

Property	Rounded Unit for Observed or Calculated Value
Chemical composition	Nearest unit in the last right-hand place of figures of the specified limit
Tensile strength, yield strength	Nearest ksi (nearest 5 MPa)
Elongation	Nearest 1%

16. Inspection

16.1 The manufacturer shall afford the inspector representing the purchaser all reasonable facilities to satisfy him that the material is being furnished in accordance with the specified requirements.

17. Rejection and Rehearing

17.1 Material that fails to conform to the requirements of this specification may be rejected. Rejection should be reported to the manufacturer or supplier promptly and in writing. In case of dissatisfaction with the results of the test, the manufacturer or supplier may make claim for a rehearing.

18. Packaging and Package Marking

18.1 The material shall be separated by size, composition, and temper, and prepared for shipment in such a manner as to ensure acceptance by common carrier for transportation and to afford protection from the normal hazards of transportation.

18.2 Each shipping unit shall be legibly marked with the purchase order number, metal or alloy designation, temper, size, shape, gross and net weight, and name of supplier. The specification number shall be shown, when specified.

19. Certification

19.1 A manufacturer's certificate of compliance shall be furnished to the purchaser stating that each lot has been sampled, tested, and inspected in accordance with this specification and the requirements have been met.

20. Test Report

20.1 When specified in the purchase order or contract, the manufacturer or supplier shall furnish to the purchaser a manufacturer's test report showing the results of the required tests.

APPENDIX

(Nonmandatory Information)

X1. METRIC EQUIVALENTS

X1.1 The SI unit for strength properties now shown is in accordance with the International System of Units (SI). The derived SI unit for force is the newton (N), which is defined as that force which when applied to a body having a mass of one kilogram gives it an acceleration of one metre per second squared ($N = kg \cdot m/s^2$). The derived SI unit for pressure or stress is the newton per square metre (N/m^2), which has been named the pascal (Pa) by the General Conference on Weights and Measures. Since 1 ksi = 6,894,757 Pa the metric equivalents are expressed as megapascal (MPa), which is the same as MN/m^2 and N/mm^2.

SPECIFICATION FOR NICKEL-MOLYBDENUM ALLOY PLATE, SHEET, AND STRIP

SB-333

(Identical with ASTM Specification B 333-95a except that certification has been made mandatory.)

1. Scope

1.1 This specification covers plate, sheet, and strip of nickel-molybdenum alloys (UNS N10001, N10665, N10675, and N10629) as shown in Table 1, for use in general corrosive service.

1.2 The following products are covered under this specification:

1.2.1 *Sheet and Strip* — Hot or cold rolled, solution annealed, and descaled unless solution anneal is performed in an atmosphere yielding a bright finish.

1.2.2 *Plate* — Hot or cold rolled, solution annealed, and descaled.

1.3 The values stated in inch-pound units are to be regarded as the standard. The values given in parentheses are for information only.

2. Referenced Documents

2.1 *ASTM Standards:*

E 8 Test Methods for Tension Testing of Metallic Materials

E 18 Test Methods for Rockwell Hardness and Rockwell Superficial Hardness of Metallic Materials

E 29 Practice for Using Significant Digits in Test Data to Determine Conformance With Specifications

E 55 Practice for Sampling Wrought Nonferrous Metals and Alloys for Determination of Chemical Composition

E 112 Test Methods for Determining the Average Grain Size

E 140 Hardness Conversion Tables for Metals

E 354 Test Methods for Chemical Analysis of High-Temperature, Electrical, Magnetic, and Other Similar Iron, Nickel, and Cobalt Alloys

3. Terminology

3.1 *Descriptions of Terms Specific to This Standard:*

3.1.1 *cold-rolled plate* — material $^{3}/_{16}$ to $^{3}/_{8}$ in. (4.76 to 9.52 mm), inclusive, in thickness.

3.1.2 *hot-rolled plate* — material $^{3}/_{16}$ in. (4.76 mm) and over in thickness.

3.1.3 *plate* — material $^{3}/_{16}$ in. (4.76 mm) and over in thickness.

3.1.4 *sheet and strip* — material under $^{3}/_{16}$ in. (4.76 mm) in thickness.

4. Ordering Information

4.1 Orders for material under this specification shall include the following information:

4.1.1 *Alloy* — Table 1,

4.1.2 *Dimensions* — Thickness (in decimals of an inch), width, and length (inch or fractions of an inch),

4.1.3 *Optional Requirement* — Plate; how the plate is to be cut (see 7.8.1 and Table 7),

4.1.4 *Certification* — Certification and a report of test results are required (Section 15),

4.1.5 *Purchase Inspection* — State which tests or inspections are to be witnessed (Section 13), and

4.1.6 *Samples for Product (Check) Analysis* — State whether samples shall be furnished (9.2.2).

5. Chemical Composition

5.1 The material shall conform to the composition limits specified in Table 1.

5.2 If a product (check) analysis is made by the purchaser, the material shall conform to the requirements

TABLE 1
CHEMICAL REQUIREMENTS

Element	Composition Limits, %			
	Alloy N10001	Alloy N10665	Alloy N10675	Alloy N10629
Nickel	remainder[A]	remainder[A]	65.0 min	remainder[A]
Molybdenum	26.0–30.0	26.0–30.0	27.0–32.0	26.0–30.0
Iron	4.0–6.0	2.0 max	1.0–3.0	1.0–6.0
Chromium	1.0 max	1.0 max	1.0–3.0	0.5–1.5
Carbon, max	0.05	0.02	0.01	0.01
Silicon, max	1.0	0.10	0.10	0.05
Cobalt, max	2.5	1.00	3.0	2.5
Manganese, max	1.0	1.0	3.0	1.5
Phosphorus, max	0.04	0.04	0.030	0.04
Sulfur, max	0.03	0.03	0.010	0.01
Vanadium	0.2–0.4	...	0.20 max	...
Nickel plus Molybdenum	...	...	94.0–98.0	...
Aluminum	...	...	0.50 max	0.1–0.5
Columbium (Nb), max	...	...	0.20	...
Copper, max	...	...	0.20	0.5
Tantalum, max	...	...	0.20	...
Titanium, max	...	...	0.20	...
Tungsten, max	...	...	3.0	...
Zirconium, max	...	...	0.10	...
Magnesium, max	...	...	...	0.1

[A] See 12.1.1.

specified in Table 1 subject to the permissible tolerances in Table 2.

6. Mechanical Properties and Other Requirements

6.1 *Tensile Properties* — The material shall conform to the room temperature tensile properties prescribed in Table 3.

6.2 *Hardness* — The hardness values given in Table 3 are informative only.

6.3 *Grain Size for Sheet and Strip* — Sheet and strip shall conform to the grain sizes as illustrated in Plate 1 of Test Methods E 112. The requirements shall be as indicated in Table 4.

7. Dimensions, Mass, and Permissible Variations

7.1 *Weight* — For calculations of mass or weight, the following densities shall be used:

Alloy	Density	
	lb/in.^{3}	(g/cm^3)
N10001	0.334	(9.24)
N10665	0.333	(9.22)
N10675	0.333	(9.22)
N10629	0.333	(9.22)

7.2 *Thickness:*

7.2.1 *Plate* — The permissible variations in thickness of plate shall be as prescribed in Table 5.

7.2.2 *Sheet and Strip* — The permissible variations in thickness of sheet and strip shall be as prescribed in Table 6. The thickness shall be measured with the micrometer spindle $^3/_8$ in. (9.525 mm) or more from any edge for material 1 in. (25.4 mm) or over in width and at any place on material under 1 in. (25.4 mm) in width.

7.3 *Width:*

7.3.1 *Plate* — The permissible variations in width of rectangular plates shall be as prescribed in Table 7.

7.3.2 *Sheet and Strip* — The permissible variations in width for sheet and strip shall be as prescribed in Table 8.

7.4 *Length:*

7.4.1 *Plate* — Permissible variations in the length of rectangular plate shall be as prescribed in Table 7.

7.4.2 *Sheet and Strip* — Sheet and strip may be ordered to cut lengths, in which case a variation of $^1/_8$ in. (3.175 mm) over the specified length shall be permitted, with a 0 minus tolerance.

7.5 *Straightness:*

7.5.1 The edgewise curvature (depth of chord) of flat sheet, strip, and plate shall not exceed 0.05 in. (1.27

TABLE 2
PRODUCT (CHECK) ANALYSIS TOLERANCES

Element	Tolerances, over max or under min, limit, %			
	Alloy N10001	Alloy N10665	Alloy N10675	Alloy N10629
Molybdenum	...	...	...	0.25
under min	0.25	0.25	0.25	...
over max	0.25	0.25	0.35	...
Iron, under min	0.07	...	0.05	0.05
over max	0.10	0.05	0.07	0.10
Chromium	0.05	0.05	0.10	...
under min	...	...	...	0.05
over max	...	...	...	0.10
Carbon	0.01	0.005	0.005	0.005
Silicon	0.05	0.02	0.02	0.01
Cobalt	0.05	0.03	0.05	0.05
Manganese	0.03	0.03	0.04	0.04
Phosphorus	0.005	0.005	0.005	0.005
Sulfur	0.005	0.005	0.003	0.003
Vanadium, under min	0.02	...	...	...
over max	0.04	...	0.04	...
Nickel, under min	...	...	0.45	...
Aluminum	...	...	0.05	...
under min	...	...	...	0.02
over max	...	...	...	0.05
Columbium (Nb) + Tantalum	...	...	0.05	...
Copper	...	...	0.02	0.03
Titanium	...	...	0.03	...
Tungsten	...	...	0.10	...
Zirconium	...	...	0.01	...
Magnesium	...	...	...	0.01

TABLE 3
MECHANICAL PROPERTY REQUIREMENTS

Alloy	Thickness, in. (mm)	Tensile Strength, min, psi (MPa)	Yield Strength (0.2 % Offset), min, psi (MPa)	Elongation in 2 in. (50.8 mm) or $4D^A$ min, %	Rockwell Hardness,[B] max
		Sheet and Strip			
N10001	Under 3/16 (4.76)	115 000 (795)	50 000 (345)	45	100 HRB
N10665	Under 3/16 (4.76)	110 000 (760)	51 000 (350)	40	100 HRB
N10675	Under 3/16 (4.76)	110 000 (760)	51 000 (350)	40	100 HRB
N10629	Under 3/16 (4.76)	110 000 (760)	51 000 (350)	40	100 HRB
		Plate			
N10001	3/16 to 2 1/2 in. (4.76 to 63.5 mm), incl	100 000 (690)	45 000 (310)	40	100 HRB
N10665	3/16 to 2 1/2 in. (4.76 to 63.5 mm), incl	110 000 (760)	51 000 (350)	40	100 HRB
N10675	3/16 to 2 1/2 in. (4.76 to 63.5 mm), incl	110 000 (760)	51 000 (350)	40	100 HRB
N10629	3/16 to 2 1/2 in. (4.76 to 63.5 mm), incl	110 000 (760)	51 000 (350)	40	100 HRB

[A] *D* refers to the diameter of the tension specimen.

[B] Hardness values are shown for information purposes only and are not to be used as a basis for rejection or acceptance. For approximate hardness conversions, see Hardness Conversion Tables E 140.

TABLE 4
GRAIN SIZE FOR ANNEALED SHEET

Thickness, in. (mm)	ASTM Micrograin Size Number, max	Average Grain Diameter, max, mm (in.)
0.125 (3.175) and under	3.0	0.127 (0.0050)
Over 0.125 (3.175)	1.5	0.214 (0.0084)

mm) multiplied by the length in feet or 0.04 mm multiplied by the length in centimetres.

7.5.2 Straightness for coiled strip is subject to agreement between the manufacturer and the purchaser.

7.6 *Squareness (Sheet)* — For sheets of all thicknesses and widths of 6 in. (152.4 mm) or more, the angle between adjacent sides shall be 90 ± 0.15 degrees ($\frac{1}{16}$ in. in 24 in. or 2.6 mm/m).

TABLE 5
PERMISSIBLE VARIATIONS IN THICKNESS OF PLATE[A]

Specified Thickness, in. (mm)	Permissible Variations in Thickness, in. (mm)[B,C]	
	+	−
$\frac{3}{16}$ to $\frac{7}{32}$ (4.762 to 5.556), incl	0.021 (0.53)	0.010 (0.25)
Over $\frac{7}{32}$ to $\frac{1}{4}$ (5.556 to 6.350), incl	0.024 (0.61)	0.010 (0.25)
Over $\frac{1}{4}$ to $\frac{3}{8}$ (6.350 to 9.525), incl	0.027 (0.69)	0.010 (0.25)
Over $\frac{3}{8}$ to $\frac{1}{2}$ (9.525 to 12.70), incl	0.030 (0.76)	0.010 (0.25)
Over $\frac{1}{2}$ to $\frac{5}{8}$ (12.70 to 15.88), incl	0.035 (0.89)	0.010 (0.25)
Over $\frac{5}{8}$ to $\frac{3}{4}$ (15.88 to 19.05), incl	0.040 (1.02)	0.010 (0.25)
Over $\frac{3}{4}$ to $\frac{7}{8}$ (19.05 to 22.25), incl	0.045 (1.14)	0.010 (0.25)
Over $\frac{7}{8}$ to 1 (22.25 to 25.4), incl	0.050 (1.27)	0.010 (0.25)
Over 1 to $2\frac{1}{2}$ (25.4 to 63.5), incl	5[D]	0.010 (0.25)

[A] Applicable to plate 48 in. (1.22 m) and under in width.
[B] Measured $\frac{3}{8}$ in. (9.525 mm) or more from any edge.
[C] Buffing or grinding for removal of light surface imperfections shall be permitted. The depth of such buffed or ground areas shall not exceed the minimum tolerance thickness.
[D] Expressed as percent of thickness.

TABLE 6
PERMISSIBLE VARIATIONS IN THICKNESS OF SHEET AND STRIP[A]

Specified Thickness, in. (mm)	Permissible Variations in Thickness, in. (mm) (All Widths)[B,C]	
	+	−
0.020 to 0.034 (0.51 to 0.86), incl	0.004 (0.10)	0.004 (0.10)
Over 0.034 to 0.056 (0.86 to 1.42), incl	0.005 (0.13)	0.005 (0.13)
Over 0.056 to 0.070 (1.42 to 1.78), incl	0.006 (0.15)	0.006 (0.15)
Over 0.070 to 0.078 (1.78 to 1.98), incl	0.007 (0.18)	0.007 (0.18)
Over 0.078 to 0.093 (1.98 to 2.36), incl	0.008 (0.20)	0.008 (0.20)
Over 0.093 to 0.109 (2.36 to 2.77), incl	0.009 (0.23)	0.009 (0.23)
Over 0.109 to 0.125 (2.77 to 3.18), incl	0.010 (0.25)	0.010 (0.25)
Over 0.125 to 0.140 (3.18 to 3.56), incl	0.013 (0.33)	0.010 (0.25)
Over 0.140 to 0.171 (3.56 to 4.34), incl	0.016 (0.41)	0.010 (0.25)
Over 0.171 to 0.187 (4.34 to 4.75), incl	0.018 (0.46)	0.010 (0.25)

[A] Applicable to sheet 48 in. (1.22 m) and under in width.
[B] Measured $\frac{3}{8}$ in. (9.525 mm) or more from any edge.
[C] Buffing for removal of light surface imperfections shall be permitted. The depth of such buffed areas shall not exceed the permissible minus variation.

TABLE 7
PERMISSIBLE VARIATIONS IN WIDTH AND LENGTH OF SHEARED, PLASMA TORCH-CUT, OR ABRASIVE-CUT RECTANGULAR PLATE

Specified Thickness	Permissible Variations in Widths and Lengths for Dimensions Given, in. (mm)			
	Up to 30 (760), incl		Over 30 (760)	
	+	−	+	−
Inches				
Sheared:				
3/16 to 5/16, excl	3/16	1/8	1/4	1/8
5/16 to 1/2, incl	1/4	1/8	3/8	1/8
Abrasive-cut:				
3/16 to 1 1/2, incl	1/16	1/16	1/16	1/16
Over 1 1/2 to 2 1/2, incl	1/8	1/8	1/8	1/8
Plasma Torch-Cut:[A]				
3/16 to 2, excl	1/2	0	1/2	0
2 to 3, incl	5/8	0	5/8	0
Millimetres				
Sheared:				
4.76 to 7.94, excl	4.76	3.18	6.35	3.18
7.94 to 12.70, incl	6.35	3.18	9.52	3.18
Abrasive-cut:				
4.76 to 38.1, incl	1.59	1.59	1.59	1.59
Over 38.1 to 63.5, incl	3.18	3.18	3.18	3.18
Plasma Torch-Cut:[A]				
4.8 to 50.8, excl	12.7	0	12.7	0
50.8 to 76.2, incl	15.9	0	15.9	0

[A] The tolerance spread shown for plasma-torch-cutting may be obtained all on the minus side, or divided between the plus and minus side if so specified by the purchaser.

TABLE 8
PERMISSIBLE VARIATIONS IN WIDTH OF SHEET AND STRIP

Specified Thickness, in. (mm)	Specified Width, in. (mm)	Permissible Variations in Specified Width, in. (mm)	
		+	−
Sheet			
0.137 (4.76) and under	2 (50.8) and over	0.125 (3.18)	0
Strip (Slit Edges)			
Over 0.020 to 0.075 (0.51 to 1.90), incl	24 (610) and under	0.007 (0.18)	0.007 (0.18)
Over 0.075 to 0.100 (1.90 to 2.54), incl	24 (610) and under	0.009 (0.23)	0.009 (0.23)
Over 0.100 to 0.125 (2.54 to 3.18), incl	24 (610) and under	0.012 (0.30)	0.012 (0.30)

7.7 *Flatness* — Plate, sheet, and strip shall be commercially flat.

7.8 *Edges:*

7.8.1 Plates shall have sheared, abrasive cut, or plasma-torch-cut edges as specified.

7.8.2 Sheet and strip shall have sheared or slit edges.

8. Workmanship, Finish, and Appearance

8.1 The material shall be uniform in quality and condition, smooth and free of injurious imperfections.

9. Sampling

9.1 *Lots for Chemical Analysis and Mechanical Testing:*

9.1.1 A lot for chemical analysis shall consist of one heat.

9.1.2 A lot of plate, sheet, or strip for mechanical testing shall be defined as the material from one heat in the same condition and specified thickness.

9.2 *Sampling for Chemical Analysis:*

9.2.1 A representative sample shall be obtained from each heat during pouring or subsequent processing.

9.2.2 Product (check) analysis shall be wholly the responsibility of the purchaser.

9.3 *Sampling for Mechanical Testing* — Representative samples shall be taken from each lot of finished material.

10. Number of Tests and Retests

10.1 *Chemical Analysis* — One test per heat.

10.2 *Tension Tests* — One test per lot.

10.3 *Grain Size* — One test per lot.

10.4 *Retests* — If one of the specimens used in the above tests of any lot fails to meet the specified requirements, two additional specimens shall be taken from different sample pieces and tested. The results of the tests on both of these specimens shall meet the specified requirements.

11. Specimen Preparation

11.1 Tension test specimens shall be taken from material in the final condition and tested transverse to the direction of rolling when width will permit.

11.2 Tension test specimens shall be any of the standard or subsize specimens shown in Test Methods E 8.

11.3 In the event of disagreement, referee specimens shall be as follows:

11.3.1 Full thickness of the material, machined to the form and dimensions shown for the sheet-type specimen in Test Methods E 8 for material under $\frac{1}{2}$ in. (12.7 mm) in thickness.

11.3.2 The largest possible round specimen shown in Test Methods E 8 for material $\frac{1}{2}$ in. (12.7 mm) and over.

12. Test Methods

12.1 The chemical composition and mechanical properties of the material as enumerated in this specification shall be determined, in case of disagreement, in accordance with the following ASTM standards:

12.1.1 *Chemical Analysis* — Test Methods E 354. For elements not covered by Test Methods E 354, the referee test method shall be as agreed upon between the manufacturer and the purchaser. The nickel composition shall be determined arithmetically by difference.

12.1.2 *Tension Test* — Test Methods E 8.

12.1.3 *Rockwell Hardness Test* — Test Methods E 18.

12.1.4 *Hardness Conversion* — Hardness Conversion Tables E 140.

12.1.5 *Grain Size* — Test Methods E 112.

12.1.6 *Determining Significant Places* — Practice E 29.

12.1.7 *Method of Sampling* — Practice E 55.

12.2 For purposes of determining compliance with the limits in this specification, an observed or calculated value shall be rounded in accordance with the rounding method of Practice E 29:

Requirements	Rounded Unit for Observed or Calculated Value
Chemical composition and tolerances	Nearest unit in the last right-hand place of figures of the specified limit
Tensile strength and yield strength	Nearest 1000 psi (7 MPa)
Elongation	Nearest 1%

13. Inspection

13.1 Inspection of the material by the purchaser at the place of manufacture shall be made as agreed upon between the purchaser and the manufacturer as part of the purchase contract.

14. Rejection and Rehearing

14.1 Material tested by the purchaser that fails to conform to the requirements of this specification may be rejected. Rejection should be reported to the producer or supplier promptly and in writing. In case of dissatisfaction with the results of the test, the producer or supplier may make claim for a rehearing.

15. Certification

15.1 A manufacturer's certification shall be furnished to the purchaser stating that material has been manufactured, tested, and inspected in accordance with this specification, and that the test results on representative samples meet specification requirements. A report of the test results shall be furnished.

16. Product Marking

16.1 Each plate, sheet, or strip shall be marked on one face with the specification number, alloy, heat number, manufacturer's identification, and size. The markings shall have no deleterious effect on the material or its performance and shall be sufficiently stable to withstand normal handling.

16.2 Each bundle or shipping container shall be marked with the name of the material; this specification number; alloy; the size; gross, tare, and net weight; consignor and consignee address; contract or order number; and such other information as may be defined in the contract or order.

17. Keywords

17.1 plate; sheet; strip; UNS N10001; UNS N10629; UNS N10665; UNS N10675

APPENDIX

(Nonmandatory Information)

X1. HEAT TREATMENT

X1.1 Proper heat treatment during or subsequent to fabrication is necessary for optimum performance, and the manufacturer shall be consulted for details.

SPECIFICATION FOR NICKEL-MOLYBDENUM ALLOY ROD

SB-335

(Identical with ASTM Specification B 335-95)

1. Scope

1.1 This specification covers rod of nickel-molybdenum alloys (UNS N10001, N10665, N10675, and N10629) as shown in Table 1, for use in general corrosive service.

1.2 The following products are covered under this specification:

1.2.1 Rods $^{5}/_{16}$ to $^{3}/_{4}$ in. (7.94 to 19.05 mm) excl in diameter, hot or cold finished, solution annealed and pickled or mechanically descaled.

1.2.2 Rods $^{3}/_{4}$ to $3^{1}/_{2}$ in. (19.05 to 88.9 mm) incl in diameter, hot or cold finished, solution annealed, ground or turned.

1.3 The values stated in inch-pound units are to be regarded as the standard.

2. Referenced Documents

2.1 *ASTM Standards:*

E 8 Test Methods for Tension Testing of Metallic Materials

E 29 Practice for Using Significant Digits in Test Data to Determine Conformance with Specifications

E 55 Practice for Sampling Wrought Nonferrous Metals and Alloys for Determination of Chemical Composition

E 354 Test Methods for Chemical Analysis of High Temperature, Electrical, Magnetic, and Other Similar Iron, Nickel, and Cobalt Alloys

3. Terminology

3.1 *Description of Term Specific to This Standard:*

3.1.1 *Rod* — a product of round solid section furnished in straight lengths

4. Ordering Information

4.1 Orders for material under this specification shall include the following information:

4.1.1 Alloy — Table 1.

4.1.2 Dimensions — Nominal diameter and length. The shortest usable multiple length shall be specified (Table 4).

4.1.3 Certification — State if certification or a report of test results is required (Section 16).

4.1.4 Purchaser Inspection — State which tests or inspections are to be witnessed (Section 13).

4.1.5 Samples for Product (Check) Analysis — State whether samples shall be furnished (9.2.2).

5. Chemical Composition

5.1 The material shall conform to the composition limits specified in Table 1.

5.2 If a product (check) analysis is made by the purchaser, the material shall conform to the requirements specified in Table 1 subject to the permissible tolerances in Table 2.

6. Mechanical Properties and Other Requirements

6.1 The mechanical properties of the material at room temperature shall conform to those shown in Table 3.

7. Dimensions and Permissible Variations

7.1 *Diameter* — The permissible variations from the specified diameter shall be as prescribed in Table 4.

TABLE 1
CHEMICAL REQUIREMENTS

Element	Composition Limits, % Alloy N10001	Alloy N10665	Alloy N10675	Alloy N10629
Nickel	Remainder [Note (1)]	Remainder [Note (1)]	65.0 min.	Remainder [Note (1)]
Molybdenum	26.0–30.0	26.0–30.0	27.0–32.0	26.0–30.0
Iron	4.0–6.0	2.0 max	1.0–3.0	1.0–6.0
Chromium	1.0 max	1.0 max	1.0–3.0	0.5–1.5
Carbon, max	0.05	0.02	0.01	0.01
Silicon, max	1.0	0.10	0.10	0.05
Cobalt, max	2.5	1.00	3.0	2.5
Manganese, max	1.0	1.0	3.0	1.5
Phosphorus, max	0.04	0.04	0.030	0.04
Sulfur, max	0.03	0.03	0.010	0.01
Vanadium	0.2–0.4	....	0.20 max	....
Nickel plus Molybdenum	....	....	94.0–98.0	
Aluminum	....	....	0.50 max	0.1–0.5
Columbium (Nb), max	....	....	0.20	
Copper, max	....	....	0.20	0.5
Tantalum, max	....	....	0.20	
Titanium, max	....	....	0.20	
Tungsten, max	....	....	3.0	
Zirconium, max	....	....	0.10	
Magnesium, max	....	....	....	0.1

NOTE:
(1) See 12.1.1.

7.2 *Out of Roundness* — The permissible variation in roundness shall be as prescribed in Table 4.

7.3 *Machining Allowances* — When the surfaces of finished material are to be machined, the following allowances are suggested for normal machining operations.

7.3.1 *As-finished (Annealed and Descaled)* — For diameters of $^{5}/_{16}$ to $^{11}/_{16}$ in. (7.94 to 17.46 mm) incl., an allowance of $^{1}/_{16}$ in. (1.59 mm) on the diameter should be made for finish machining.

7.4 *Length:*

7.4.1 Unless multiple, nominal, or cut lengths are specified, random mill lengths shall be furnished.

7.4.2 The permissible variations in length of multiple, nominal, or cut length rod shall be as prescribed in Table 5. Where rods are ordered in multiple lengths, a $^{1}/_{4}$ in. (6.35 mm) length addition shall be allowed for each uncut multiple length.

7.5 *Ends:*

7.5.1 Rods ordered to random or nominal lengths shall be furnished with either cropped or sawed ends.

7.5.2 Rods ordered to cut lengths shall be furnished with square saw-cut or machined ends.

7.6 *Weight* — For calculations of mass or weight, the following densities shall be used:

Alloy	Density lb/in^3	g/cm^3
N10001	0.334	9.24
N10665	0.333	9.22
N10675	0.333	9.22
N10629	0.333	9.22

7.7 *Straightness* — The maximum curvature (depth of chord) shall not exceed 0.050 in. multiplied by the length of the chord in feet (0.04 mm multiplied by the length in centimetres).

8. Workmanship, Finish, and Appearance

8.1 The material shall be uniform in quality and condition, smooth, and free of injurious imperfections.

TABLE 2
PRODUCT (CHECK) ANALYSIS TOLERANCES

Element	Tolerances, Over Max or Under Min., Limit, %			
	Alloy N10001	Alloy N10665	Alloy N10675	Alloy N10629
Molybdenum, under min.	0.25	0.25	0.25	0.25
Over max	0.25	0.25	0.35	...
Iron, under min.	0.07	...	0.05	0.05
Over max	0.10	0.05	0.07	0.10
Chromium	0.05	0.05	0.10	
Under min	...	...	...	0.05
Over max	...	...	...	0.10
Carbon	0.01	0.005	0.005	0.005
Silicon	0.05	0.02	0.02	0.01
Cobalt	0.05	0.03	0.05	0.05
Manganese	0.03	0.03	0.04	0.04
Phosphorus	0.005	0.005	0.005	0.005
Sulfur	0.005	0.005	0.003	0.003
Vanadium, under min.	0.02	...	...	...
Over max	0.04	...	0.04	...
Nickel, under min.	...	...	0.45	...
Aluminum	...	...	0.05	...
Under min.	...	...	...	0.02
Over max	...	...	...	0.05
Columbium (Nb) + Tantalum	...	...	0.05	...
Copper	...	...	0.02	0.03
Titanium	...	...	0.03	...
Tungsten	...	...	0.10	...
Zirconium	...	...	0.01	...
Magnesium	...	...	...	0.01

TABLE 3
MECHANICAL PROPERTIES

Alloy	Thickness, in. (mm)	Tensile Strength, Min., psi (MPa)	Yield Strength (0.2% Offset), Min., psi (MPa)	Elongation in 2 in. (50 mm) or 4*D* [Note (1)], Min. %	Rockwell Hardness, Max
N10001	5/16 to 1 1/2 (7.94 to 38.1) incl	115,000 (795)	46,000 (315)	35	
	Over 1 1/2 to 3 1/2 (38.1 to 88.9) incl	100,000 (690)	46,000 (315)	30	
N10665	5/16 to 3 1/2 (7.94 to 88.9) incl	110,000 (760)	51,000 (350)	40	
N10675	5/16 to 3 1/2 (7.94 to 88.9) incl	110,000 (760)	51,000 (350)	40	
N10629	5/16 to 3 1/2 (7.94 to 88.9) incl	110,000 (760)	51,000 (350)	40	100 HRB

NOTE:
(1) *D* refers to the diameter of the tension specimen.

9. Sampling

9.1 *Lots for Chemical Analysis and Mechanical Testing:*

9.1.1 A lot for chemical analysis shall consist of one heat.

9.1.2 A lot of bar for mechanical testing shall be defined as the material from one heat in the same condition and specified diameter.

9.2 *Sampling for Chemical Analysis:*

9.2.1 A representative sample shall be obtained from each heat during pouring or subsequent processing.

9.2.2 Product (check) analysis shall be wholly the responsibility of the purchaser.

9.3 *Sampling for Mechanical Testing:*

9.3.1 A representative sample shall be taken from each lot of finished material.

TABLE 4
PERMISSIBLE VARIATIONS IN DIAMETER AND OUT-OF-ROUNDNESS OF FINISHED RODS

Specified Diameter, in. (mm)	Permissible Variations, in. (mm)		
	Diameter		Out of Roundness, Max
	Plus	Minus	
Hot-Finished, Annealed, and Descaled Rods			
5/16 to 7/16 (7.94–11.11), incl	0.012 (0.30)	0.012 (0.30)	0.018 (0.46)
Over 7/16 to 5/8 (11.11–15.87), incl	0.014 (0.36)	0.014 (0.36)	0.020 (0.51)
Over 5/8 to 3/4 (15.87–19.05), excl	0.016 (0.41)	0.016 (0.41)	0.024 (0.61)
Hot-Finished, Annealed, and Ground or Turned Rods			
3/4 to 3 1/2 (19.05–88.9), incl	0.010 (0.25)	0	0.008 (0.20)

TABLE 5
PERMISSIBLE VARIATIONS IN LENGTH OF RODS

Random mill lengths	2 to 12 ft (610 to 3,660 mm) long with not more than 25 weight % under 4 ft (1.22 m).
Multiple lengths	Furnished in multiples of a specified unit length, within the length limits indicated above. For each multiple, an allowance of 1/4 in. (6.35 mm) shall be made for cutting, unless otherwise specified. At the manufacturer's option, individual specified unit lengths may be furnished.
Nominal lengths	Specified nominal lengths having a range of not less than 2 ft (610 mm) with no short lengths allowed.
Cut lengths	A specified length to which all rods shall be cut with a permissible variation of +1/8 in. (3.17 mm) −0.

10. Number of Tests and Retests

10.1 *Chemical Analysis* — One test per heat.

10.2 *Tension Tests* — One test per lot.

10.3 *Retests* — If the specimen used in the mechanical test of any lot fails to meet the specified requirements, two additional specimens shall be taken from different sample pieces and tested. The results of the tests on both of these specimens shall meet the specified requirements.

11. Specimen Preparation

11.1 Tension test specimens shall be taken from material after final heat-treatment and tested in the direction of fabrication.

11.2 Tension test specimens shall be any of the standard or subsized specimens shown in Test Methods E 8.

11.3 In the event of disagreement, the referee specimen shall be the largest possible round specimen shown in Test Methods E 8.

12. Test Methods

12.1 The chemical composition and mechanical properties of the material as enumerated in this specification shall be determined, in case of disagreement, in accordance with the following ASTM methods:

12.1.1 *Chemical Analysis* — Test Methods E 354. For elements not covered by Test Methods E 354, the referee method shall be as agreed upon between the manufacturer and the purchaser. The nickel composition shall be determined arithmetically by difference.

12.1.2 *Tension Test* — Test Methods E 8.

12.1.3 *Method of Sampling* — Practice E 55.

12.1.4 *Determining Significant Places* — Practice E 29.

12.2 For purposes of determining compliance with the limits in this specification, an observed value or a calculated value shall be rounded as indicated below, in accordance with the rounding method of Practice E 29:

Requirements	Rounded Unit for Observed or Calculated Value
Chemical composition and tolerance	Nearest unit in the last right-hand place of figures of the specified limit
Tensile strength and yield strength	Nearest 1,000 psi (7 MPa)
Elongation	Nearest 1%

13. Inspection

13.1 Inspection of the material shall be made as agreed upon by the manufacturer and the purchaser as part of the purchase contract.

14. Rejection and Rehearing

14.1 Material tested by the purchaser that fails to conform to the requirements of this specification may be rejected. Rejection should be reported to the producer or supplier promptly and in writing. In case of dissatisfaction with the results of the test, the producer or supplier may make claim for a rehearing.

15. Certification

15.1 When specified in the purchase order or contract, a manufacturer's certification shall be furnished to the purchaser stating that material has been manufactured, tested, and inspected in accordance with this specification, and that the test results on representative samples meet specification requirements. When specified in the purchase order or contract, a report of the test results shall be furnished.

16. Marking

16.1 Each piece of material ½ in. (12.7 mm) and over in diameter shall be marked with the specification number, alloy, heat number, manufacturer's identification, and size. The markings shall have no deleterious effect on the material or its performance and shall be sufficiently stable to withstand normal handling.

16.2 Each bundle or shipping container shall be marked with the name of the material; this specification number; alloy; the size; gross, tare, and net weight; consignor and consignee address; contract or order number; and such other information as may be defined in the contract or order.

APPENDIX

(Nonmandatory Information)

XI. HEAT TREATMENT

X1.1 Proper heat treatment during or subsequent to fabrication is necessary for optimum performance, and the manufacturer shall be consulted for details.

SPECIFICATION FOR SEAMLESS AND WELDED TITANIUM AND TITANIUM ALLOY TUBES FOR CONDENSERS AND HEAT EXCHANGERS

SB-338

(Identical with ASTM Specification B 338-99 for all grades except for section 21.1, which requires mandatory certification.)

1. Scope

1.1 This specification defines the requirements for 20 grades of titanium and titanium alloy tubing intended for surface condensers, evaporators, and heat exchangers, as follows:

1.1.1 *Grade 1* — Unalloyed titanium,

1.1.2 *Grade 2* — Unalloyed titanium,

1.1.3 *Grade 3* — Unalloyed titanium,

1.1.4 *Grade 7* — Unalloyed titanium plus 0.12 to 0.25% palladium,

1.1.5 *Grade 9* — Titanium alloy (3% aluminum, 2.5% vanadium),

1.1.6 *Grade 11* — Unalloyed titanium plus 0.12 to 0.25% palladium,

1.1.7 *Grade 12* — Titanium alloy (0.3% molybdenum, 0.8% nickel),

1.1.8 *Grade 13* — Titanium alloy (0.5% nickel, 0.05% ruthenium),

1.1.9 *Grade 14* — Titanium alloy (0.5% nickel, 0.05% ruthenium),

1.1.10 *Grade 15* — Titanium alloy (0.5% nickel, 0.05% ruthenium),

1.1.11 *Grade 16* — Unalloyed titanium plus 0.04 to 0.08% palladium,

1.1.12 *Grade 17* — Unalloyed titanium plus 0.04 to 0.08% palladium,

1.1.13 *Grade 18* — Titanium alloy (3% aluminum, 2.5% vanadium) plus 0.04 to 0.08% palladium,

1.1.14 *Grade 26* — Unalloyed titanium plus 0.08 to 0.14% ruthenium,

1.1.15 *Grade 27* — Unalloyed titanium plus 0.08 to 0.14% ruthenium,

1.1.16 *Grade 28* — Titanium alloy (3% aluminum, 2.5% vanadium) plus 0.08 to 0.14% ruthenium,

1.1.17 *Grade 30* — Titanium alloy (0.3% cobalt, 0.05% palladium),

1.1.18 *Grade 31* — Titanium alloy (0.3% cobalt, 0.05% palladium),

1.1.19 *Grade 33* — Titanium alloy (0.4% nickel, 0.015% palladium, 0.025% ruthenium, 0.15% chromium), and

1.1.20 *Grade 34* — Titanium alloy (0.4% nickel, 0.015% palladium, 0.025% ruthenium, 0.15% chromium).

1.2 Tubing covered by this specification shall be heat treated by at least a stress relief as defined in 5.3.

1.3 The values stated in inch-pound units are to be regarded as the standard. The values given in parentheses are for information only.

2. Referenced Documents

2.1 *ASTM Standards:*

A 370 Test Methods and Definitions for Mechanical Testing of Steel Products

E 8 Test Methods for Tension Testing of Metallic Materials

E 29 Practice for Using Significant Digits in Test Data to Determine Conformance With Specifications

E 120 Test Methods for Chemical Analysis of Titanium and Titanium Alloys

E 1409 Test Method for the Determination of Oxygen in Titanium and Titanium Alloys by the Inert Gas Fusion Technique

E 1447 Test Method for the Determination of Hydrogen in Titanium and Titanium Alloys by the Inert Gas Fusion Thermal Conductivity Method

3. Terminology

3.1 *Descriptions of Terms Specific to This Standard:*

3.1.1 *lot (seamless tube), n* — tubing of the same nominal size and wall thickness manufactured and heat-treated using the same process and equipment, made from the same production heat, and given the same finishing operation. For continuous anneal the lot shall be limited to the product of an 8 h period. For batch anneal, the lot shall be limited to a single furnace load.

3.1.2 *lot (welded/cold worked tube), n* — a number of pieces of tubing of the same nominal size and wall thickness manufactured by the same process from a single heat of titanium, heat treated in the same furnace batch, and given the same finishing operations.

3.1.3 *lot (welded tube), n* — tubing of the same nominal size and wall thickness welded and heat treated using the same process and equipment, made from the same production heat, and given the same finishing operation; the lot shall be limited to the product of an 8-h period. For batch processing, the lot shall be limited to a single furnace load.

4. Ordering Information

4.1 Orders for material to this specification shall include the following information as required:

4.1.1 Quantity,

4.1.2 Grade number (Section 1),

4.1.3 Diameter and wall thickness (Section 12) (Note 1),

4.1.4 Length (Section 12),

4.1.5 Method of manufacture and finish (Sections 5 and 13),

4.1.6 Restrictive chemistry, if desired (Section 6 and Table 1),

4.1.7 Product analysis, if desired (Section 7 and Table 2),

4.1.8 Special mechanical properties, if desired (Section 8 and Table 3),

4.1.9 Nondestructive tests (Section 11),

4.1.10 Packaging (Section 23),

4.1.11 Inspection (Section 17), and

4.1.12 Certification (Section 21).

NOTE 1 — Tube is available to specified outside diameter and wall thickness (state minimum or average wall).

5. Materials and Manufacture

5.1 Seamless tube shall be made from hollow billet by any cold reducing or cold drawing process that will yield a product meeting the requirements of this specification. Seamless tube is produced with a continuous periphery in all stages of manufacturing operations.

5.2 Welded tube shall be made from flat-rolled product by an automatic arc-welding process or other method of welding that will yield a product meeting the requirements of this specification. Use of a filler material is not permitted.

5.3 Welded/cold worked tube (WCS) shall be made from welded tube manufactured as specified in 5.2. The welded tube shall be sufficiently cold worked to final size in order to transform the cast weld microstructure into a typical equiaxed microstructure in the weld upon subsequent heat treatment. The product shall meet the requirements for seamless tube of this specification.

5.4 The tube shall be furnished in the annealed condition with the exception of Grades 9, 18, and 28, which, at the option of the purchaser, can be furnished in either the annealed or the cold worked and stress relieved condition, defined as at a minimum temperature of 600°F (316°C) for not less than 30 min.

6. Chemical Requirements

6.1 The titanium shall conform to the chemical requirements prescribed in Table 1.

6.1.1 The elements listed in Table 1 are intentional alloy additions or elements that are inherent to the manufacture of titanium sponge, ingot, or mill product.

6.1.2 Elements intentionally added to the melt must be identified, analyzed, and reported in the chemical analysis.

6.2 When agreed upon by the producer and the purchaser and requested by the purchaser in the written purchase order, chemical analysis shall be completed for specific residual elements not listed in this specification.

7. Product Analysis

7.1 When requested by the purchaser and stated in the purchase order, product analysis for any elements

TABLE 1
CHEMICAL REQUIREMENTS[A]

Element	Composition, %									
	Grade									
	1	2	3	4	5	6	7	9	11	12
Nitrogen, max	0.03	0.03	0.05	0.05	0.05	0.03	0.03	0.03	0.03	0.03
Carbon, max	0.08	0.08	0.08	0.08	0.08	0.08	0.08	0.08	0.08	0.08
Hydrogen,[B,C] max	0.015	0.015	0.015	0.015	0.015	0.015	0.015	0.015	0.015	0.015
Iron, max	0.20	0.30	0.30	0.50	0.40	0.50	0.30	0.25	0.20	0.30
Oxygen, max	0.18	0.25	0.35	0.40	0.20	0.20	0.25	0.15	0.18	0.25
Aluminum	...	...	...	...	5.5–6.75	4.0–6.0	...	2.5–3.5	...	...
Vanadium	...	...	...	...	3.5–4.5	...	...	2.0–3.0	...	...
Tin	...	...	...	...	...	2.0–3.0	...	...	...	...
Ruthenium	...	...	...	...	...	...	...	...	...	...
Palladium	...	...	...	...	...	...	0.12–0.25	...	0.12–0.25	...
Cobalt	...	...	...	...	...	...	...	...	...	...
Molybdenum	...	...	...	...	...	...	...	...	...	0.2–0.4
Chromiun	...	...	...	...	...	...	...	...	...	...
Nickel	...	...	...	...	...	...	...	...	...	0.6–0.9
Niobium	...	...	...	...	...	...	...	...	...	...
Zirconium	...	...	...	...	...	...	...	...	...	...
Silicon	...	...	...	...	...	...	...	...	...	...
Residuals[D,E,F] max each	0.1	0.1	0.1	0.1	0.1	0.1	0.1	0.1	0.1	0.1
Residuals[D,E,F] max total	0.4	0.4	0.4	0.4	0.4	0.4	0.4	0.4	0.4	0.4
Titanium[G]	balance	balance	balance	balance	balance	balance	balance	balance	balance	balance

(continued)

TABLE 1
CHEMICAL REQUIREMENTS[A] (CONT'D)

	Composition, %[A]									
	Grade									
Element	13	14	15	16	17	18	19	20	21	23
Nitrogen, max	0.03	0.03	0.05	0.03	0.03	0.03	0.03	0.03	0.03	0.03
Carbon, max	0.08	0.08	0.08	0.08	0.08	0.08	0.05	0.05	0.05	0.08
Hydrogen,[B,C] max	0.015	0.015	0.015	0.015	0.015	0.015	0.02	0.02	0.015	0.0125
Iron, max	0.20	0.30	0.30	0.30	0.20	0.25	0.30	0.30	0.40	0.25
Oxygen, max	0.10	0.15	0.25	0.25	0.18	0.15	0.12	0.12	0.17	0.13
Aluminum	...	...	...	...	...	2.5–3.5	3.0–4.0	3.0–4.0	2.5–3.5	5.5–6.5
Vanadium	...	...	...	...	...	2.0–3.0	7.5–8.5	7.5–8.5	...	3.5–4.5
Tin	...	...	...	...	...	...	...	...	...	...
Ruthenium	0.04–0.06	0.04–0.06	0.04–0.06	...	...	...	...	...	...	...
Palladium	...	...	...	0.04–0.08	0.04–0.08	0.04–0.08	...	0.04–0.08	...	...
Cobalt	...	...	...	...	...	...	...	...	...	...
Molybdenum	...	...	...	...	...	...	3.5–4.5	3.5–4.5	14.0–16.0	...
Chromiun	...	...	...	...	...	...	5.5–6.5	5.5–6.5	...	...
Nickel	0.04–0.06	0.04–0.06	0.04–0.06	...	...	...	...	...	...	...
Niobium	...	...	...	...	...	...	...	...	2.2–3.2	...
Zirconium	...	...	...	...	...	...	3.5–4.5	3.5–4.5	...	...
Silicon	...	...	...	...	...	...	...	...	0.15–0.25	...
Residuals[D,E,F] max each	0.1	0.1	0.1	0.1	0.1	0.1	0.15	0.15	0.1	0.1
Residuals[D,E,F] max total	0.4	0.4	0.4	0.4	0.4	0.4	0.4	0.4	0.4	0.4
Titanium[G]	balance	balance	balance	balance	balance	balance	balance	balance	balance	balance

(continued)

TABLE 1
CHEMICAL REQUIREMENTS[A] (CONT'D)

	Composition, %[A]										
	Grade										
Element	24	25	26	27	28	29	30	31	32	33	34
Nitrogen, max	0.05	0.05	0.03	0.03	0.03	0.03	0.03	0.05	0.03	0.03	0.05
Carbon, max	0.08	0.08	0.08	0.08	0.08	0.08	0.08	0.08	0.08	0.08	0.08
Hydrogen,[B,C] max	0.015	0.0125	0.015	0.015	0.015	0.015	0.015	0.015	0.015	0.015	0.015
Iron, max	0.40	0.40	0.30	0.20	0.25	0.25	0.30	0.30	0.25	0.30	0.30
Oxygen, max	0.20	0.20	0.25	0.18	0.15	0.13	0.25	0.35	0.11	0.25	0.35
Aluminum	5.5–6.75	5.5–6.75	...	...	2.5–3.5	5.5–6.5	...	...	4.5–5.5	...	...
Vanadium	3.5–4.5	3.5–4.5	...	...	2.0–3.0	3.5–4.5	...	...	0.6–1.4	...	...
Tin	...	...	...	...	...	...	...	...	0.6–1.4	...	...
Ruthenium	...	...	0.08–0.14	0.08–0.14	0.08–0.14	0.08–0.14	...	...	...	0.02–0.04	0.02–0.04
Palladium	0.04–0.08	0.04–0.08	...	...	...	...	0.04–0.08	0.04–0.08	...	0.01–0.02	0.01–0.02
Cobalt	...	...	...	...	...	...	0.20–0.80	0.20–0.80	...	...	...
Molybdenum	...	...	...	...	...	...	...	...	0.6–1.2	...	...
Chromium	...	...	...	...	...	...	...	...	...	0.1–0.2	0.1–0.2
Nickel	...	0.3–0.8	...	...	...	...	...	...	...	0.35–0.55	0.35–0.55
Niobium	...	...	...	...	...	...	...	...	...	...	...
Zirconium	...	...	...	...	...	...	...	...	0.6–1.4	...	...
Silicon	...	...	...	...	...	...	...	...	0.06–0.14	...	...
Residuals [D,E,F] max each	0.1	0.1	0.1	0.1	0.1	0.1	0.1	0.1	0.1	0.1	0.1
Residuals [D,E,F] max total	0.4	0.4	0.4	0.4	0.4	0.4	0.4	0.4	0.4	0.4	0.4
Titanium[G]	balance	balance	balance	balance	balance	balance	balance	balance	balance	remainder	remainder

[A] Analysis shall be completed for all elements listed in this table for each grade. The analysis results for the elements not qualified in the table need not be reported unless the concentration level is greater than 0.1% each or 0.4% total.

[B] Lower hydrogen may be obtained by negotiation with the manufacturer.

[C] Final product analysis.

[D] Need not be reported.

[E] A residual is an element present in a metal or alloy in small quantities and is inherent to the manufacturing process but not added intentionally. In titanium these elements include aluminum, vanadium, tin, chromium, molybdenum, niobium, zirconium, hafnium, bismuth, ruthenium, palladium, yttrium, copper, silicon, cobalt, tantalum, nickel, boron, manganese, and tungsten.

[F] The purchaser may, in his written purchase order, request analysis for specific residual elements not listed in this specification.

[G] The percentage of titanium is determined by difference.

TABLE 2
PERMISSIBLE VARIATIONS IN PRODUCT ANALYSIS

Element	% Maximum or Specified Range	% Permissible Variation in Product Analysis
Nitrogen	0.05	+0.02
Carbon	0.10	+0.02
Hydrogen	0.015	+0.002
Iron	0.35	+0.15
Oxygen	0.30	+0.03
	0.31 to 0.40	±0.04
Palladium	0.01 to 0.02	±0.002
Palladium	0.04 to 0.25	±0.02
Ruthenium	0.02 to 0.04	±0.005
Ruthenium	0.04 to 0.06	±0.005
Aluminum	2.5 to 3.5	±0.40
Vanadium	2.0 to 3.0	±0.15
Molybdenum	0.2 to 0.4	±0.03
Chromium	0.1 to 0.2	±0.02
Nickel	0.3 to 0.9	±0.05
Residuals [A] (each)	0.1	+0.02
Cobalt	0.2 to 0.8	±0.05
Ruthenium	0.08 to 0.14	±0.01

[A] A residual is an element present in a metal or alloy in small quantities inherent to the manufacturing process but not added intentionally. In titanium these elements include aluminum, vanadium, tin, iron, chromium, molybdenum, niobium, zirconium, hafnium, bismuth, ruthenium, palladium, yttrium, copper, silicon, cobalt, tantalum, nickel, boron, manganese, and tungsten.

listed in Table 1 shall be made on the completed product.

7.1.1 Elements other than those listed in Table 1 are deemed to be capable of occurring in the grades listed in Table 1 by, and only by way of, unregulated or unanalyzed scrap additions to the ingot melt. Therefore, product analysis for elements not listed in Table 1 shall not be required unless specified and shall be considered to be in excess of the intent of this specification.

7.2 Product analysis tolerances, listed in Table 2, do not broaden the specified heat analysis requirements, but cover variations between different laboratories in the measurement of chemical content. The manufacturer shall not ship the finished product that is outside the limits specified in Table 1 for the applicable grade.

8. Tensile Requirements

8.1 The room temperature tensile properties of the tube in the condition normally supplied shall conform to the requirements prescribed in Table 3. Mechanical properties for conditions other than those given in this table may be established by agreement between the manufacturer and the purchaser. (See Test Methods E 8.)

9. Flattening Test

9.1 Tubing shall withstand, without cracking, flattening under a load applied gradually at room temperature until the distance between the load platens is not more than H in. H is calculated as follows:

$$H = \frac{(1 + e)t}{e + t/D} \quad (1)$$

where:

H = the minimum flattened height, in. (mm),
t = the nominal wall thickness, in. (mm), and
D = the nominal tube diameter, in. (mm).

For Grades 1, 2, 7, 11, 13, 14, 16, 17, 26, 27, 30, and 33:

$$e = 0.07 \text{ in. for all diameters} \quad (2)$$

For Grades 3, 31, and 34:

$$e = 0.04 \text{ through 1 in. diameter} \quad (3)$$
$$e = 0.06 \text{ over 1 in. diameter} \quad (4)$$

For Grades 9, 12, 15, 18, and 28:
e shall be negotiated between the producer and the purchaser

9.1.1 For welded tubing, the weld shall be positioned on the 90 or 270° centerline during loading so as to be subjected to a maximum stress.

9.1.2 When low D-to-t ratio tubular products are tested, because the strain imposed due to geometry is unreasonably high on the inside surface at the six and twelve o'clock locations, cracks at these locations shall not be cause for rejection if the D-to-t ratio is less than 10.

9.2 The results from all calculations are to be rounded to two decimal places. Examination for cracking shall be by the unaided eye.

9.3 Welded tube shall be subjected to a reverse flattening test in accordance with Supplement II of Test Methods and Definitions A 370. A section of the tube, approximately 4 in. (102 mm) long, that is slit longitudinally 90° either side of the weld, shall be opened and flattened with the weld at the point of maximum bend. No cracking is permitted.

10. Flaring Test

10.1 For tube $3\frac{1}{2}$ in. (88 mm) in outside diameter and smaller, and 0.134 in. (3.4 mm) in wall thickness and thinner, a section of tube approximately 4 in. (102 mm) in length shall withstand being flared with a tool having a 60° included angle until the tube at the mouth of the flare has been expanded in accordance with Table 4. The flared end shall show no cracking or rupture visible to the unaided eye. Flaring tests on larger diameter tube

TABLE 3
TENSILE REQUIREMENTS

Grade	Tensile Strength, min ksi	Tensile Strength, min MPa	Yield Strength, 0.2% Offset Yield min ksi	Yield Strength, 0.2% Offset Yield min MPa	Yield Strength, 0.2% Offset Yield max ksi	Yield Strength, 0.2% Offset Yield max MPa	Elongation in 2 in. or 50 mm, min, %
1 [A]	35	240	25	170	45	310	24
2 [A]	50	345	40	275	65	450	20
3 [A]	65	450	55	380	80	550	18
7 [A]	50	345	40	275	65	450	20
9 [B]	125	860	105	725	...	...	10
9 [A]	90	620	70	483	...	...	15 [C]
11 [A]	35	240	25	170	45	310	24
12 [A]	70	483	50	345	...	...	18 [C]
13 [A]	40	275	25	170	...	...	24
14 [A]	60	410	40	275	...	...	20
15 [A]	70	483	55	380	...	...	18
16 [A]	50	345	40	275	65	450	20
17 [A]	35	240	25	170	45	310	24
18 [B]	125	860	105	725	...	...	10
18 [A]	90	620	70	483	...	...	15 [C]
26	50	345	40	275	65	450	20
27	35	240	25	170	45	310	24
28	90	620	70	483	...	...	15
30	50	345	40	275	65	450	20
31	65	450	55	380	80	550	18
33	50	345	40	275	65	450	20
34	65	450	55	380	80	550	18

[A] Properties for material in the annealed condition.
[B] Properties for cold-worked and stress-relieved material.
[C] Elongation for welded tubing manufactured from continuously cold rolled and annealed strip from coils for Grades 9, 12, and 18 will be 12%.

or tubing outside the range of Table 4 shall be as agreed upon between the manufacturer and the purchaser.

11. Nondestructive Tests

11.1 Welded tubing shall be tested using both a nondestructive electromagnetic test and an ultrasonic test as described in 11.2.1 and 11.2.2. Seamless and welded/cold worked tubing shall be tested using an ultrasonic test as described in 11.2.1.3.

11.1.1 Welded or seamless tubing shall be tested with a hydrostatic or pneumatic test as described in 11.3 or 11.4.

11.2 *Nondestructive Electric or Ultrasonic Testing:*

11.2.1 In order to accommodate the various types of nondestructive testing equipment and techniques in use, and the manufacturing methods employed, the following calibration standards shall be used to establish the minimum sensitivity level for rejection. For welded tubing, the artificial defects shall be placed in the parent metal.

11.2.1.1 *Electromagnetic Testing* — A drilled hole not larger than 0.031 in. (0.787 mm) in diameter shall be drilled completely through the skelp (for welded tube) or radially and completely through the tube wall (welded tube), with care being taken to avoid distortion of the tube while drilling.

11.2.1.2 *Ultrasonic Testing (Welded Tubing)* — A longitudinal notch 0.031 in. (0.787 mm) or less in width and 0.5 in. (12.7 mm) or less in length shall be machined on a radial parallel to the tube axis on the outside and inside of the tube. The notch depth shall not exceed 10% of the nominal wall of the tube or 0.004 in. (0.102 mm), whichever is greater. The length of the notch shall be compatible with the testing method, and the notches shall be located 180° from the weld.

11.2.1.3 *Ultrasonic Testing (Seamless and Welded/Cold Worked Tubing),* Longitudinal and transverse notches not exceeding 0.010 in. (0.25 mm) in width and 10% of the nominal tube wall or 0.004 in. (0.102 mm), whichever is greater, in depth shall be machined on the inner and outer surfaces of the tube. The length

TABLE 4
FLARING REQUIREMENTS

Grade	Expansion of Inside Diameter, min, %
1	22
2	20
3	17
7	20
9 [A]	20
11	22
12	17
13	22
14	20
15	17
16	20
17	22
18 [A]	20
26	20
27	22
28 [A]	20
30	20
31	17
33	20
34	17

[A] Annealed.

of the notches shall not exceed 0.125 in. (3.18 mm).

11.2.2 Any tubes showing an indication in excess of that obtained from the calibration standard shall be set aside and be subject to rework, retest, or rejection. A tube thus set aside may be examined further for confirmation of the presence of a defect and may be resubmitted for inspection if no defect is found. Any tube may also be resubmitted for inspection if reworked so as to remove the defect within the specified diameter, and wall thickness tolerances are established from Table 5 (rework by weld repair is not permitted).

11.3 *Hydrostatic Test:*

11.3.1 Each tube so tested shall withstand, without showing bulges, leaks, or other defects, an internal hydrostatic pressure that will produce in the tube wall a stress of 50% of the minimum specified yield strength at room temperature. This pressure shall be determined by the equation:

$$P = \frac{SEt}{R_O - 0.4t} \quad (5)$$

where:

P = minimum hydrostatic test pressure, psi (or MPa),
S = allowable fiber stress or one half the minimum yield strength, psi (or MPa),
t = wall thickness, in. (or mm),
R_o = outside tube radius, in. (or mm),
E = 0.85 welded tube, and
E = 1.0 seamless and welded/cold worked tube.

11.3.2 The maximum hydrostatic test pressure shall not exceed 2500 psi (17.2 MPa) for sizes 3 in. (76 mm) and under, or 2800 psi (19.3 MPa) for sizes over 3 in. Hydrostatic pressure shall be maintained for not less than 5 s. When requested by the purchaser and so stated in the order, tube in sizes 14 in. (356 mm) in diameter and smaller shall be tested to one and one half times the specified working pressure, provided the fiber stress corresponding to those test pressures does not exceed one half the minimum specified yield strength of the material as determined by the equation given in 11.3. When one and one half times the working pressure exceeds 2800 psi (19.3 MPa), the hydrostatic test pressure shall be a matter of agreement between the manufacturer and purchaser.

11.4 *Pneumatic Test* — Each tube so tested shall withstand an internal air pressure of 100 psi (0.69 MPa), minimum, for 5 s minimum without showing evidence of leakage. The test method used shall permit easy detection of any leakage by using the pressure differential method or by placing the tube under water. Any evidence of leakage shall be cause for rejection of that tube.

12. Permissible Variation in Dimensions

12.1 Variations in dimensions from those specified shall not exceed the amounts prescribed in Table 5.

12.2 *Length* — When tube is ordered cut to length, the length shall not be less than that specified, but a variation of $\frac{1}{8}$ in. (3.2 mm) will be permitted on tube up to 24 ft (7.3 m) inclusive. For lengths over 24 ft (7.3 m), an additional over tolerance of $\frac{1}{8}$ in. (3.2 mm) for each 10 ft (3.05 m) or fraction thereof shall be permissible up to $\frac{1}{2}$ in. (13 mm) maximum.

12.3 *Straightness* — The tube shall be free of bends or kinks, and the maximum uniform bow shall not exceed the values given in Table 6.

12.4 *Squareness of Cut* — The angle of cut of the end of any tube may depart from square by not more than 0.016 in./in. of diameter.

12.5 *Outside Diameter:*

12.5.1 *Welded Tubes* — The outside diameter of welded tubes shall not vary from that specified by more than the amounts given in Table 5 as measured by "go" and "no go" ring gages. The dimensions of the ring gage shall be as described in 12.5.1.1. For tube diameters not listed in Table 5, the dimensional tolerances shall be as

TABLE 5
PERMISSIBLE VARIATIONS IN OUTSIDE DIMENSIONS BASED ON INDIVIDUAL MEASUREMENTS

Outside Diameter, in. (mm)	Diameter Tolerance, in. (mm)[A]	Permissible Variations[B] in Wall Thickness, t, %
Under 1 (25.4), excl	±0.004 (±0.102)	10
1 to 1 1/2 (25.4 to 38.1), excl	±0.005 (±0.127)	10
1 1/2 to 2 (38.1 to 50.8), excl	±0.006 (±0.152)	10
2 to 2 1/2 (50.8 to 63.5), excl	±0.007 (±0.178)	10
2 1/2 to 3 1/2 (63.5 to 88.9), excl	±0.010 (±0.254)	10

[A] These permissible variations in outside diameter apply only to tubes as finished at the mill before subsequent swaging, expanding, bending, polishing, or other fabricating operations.
[B] When minimum wall tubes are ordered, tolerances are all plus and shall be double the values shown.

TABLE 6
STRAIGHTNESS

Length, ft (m)	Maximum Curvature Depth of Arc
Over 3 to 6 (0.91 to 1.83), incl	1/8 in. (3.2 mm)
Over 6 to 8 (1.83 to 2.44), incl	3/16 in. (4.8 mm)
Over 8 to 10 (2.44 to 3.05), incl	1/4 in. (6.4 mm)
Over 10 (3.05)	1/4 in./any 10 ft (2.1 mm/m)

agreed upon by the purchaser and the manufacturer or supplier.

12.5.1.1 The inside diameter dimension of the "go" ring gage shall be equal to the nominal tube diameter plus the plus tolerance plus 0.002 in. The length of the "go" ring gage shall be the larger of 1 in. (25.4 mm) or the tube diameter.

12.5.1.2 The inside diameter dimension of the "no go" ring gage shall be equal to the nominal tube diameter minus the minus tolerance. The length of the "no go" ring gage shall be the larger of 1 in. or the nominal tube diameter.

12.5.2 *Seamless and Welded/Cold Worked Tubes* — The outside diameter of seamless and welded/cold worked tubes shall not vary from that specified by more than the amounts given in Table 5 as measured by any method agreed upon between the purchaser and the manufacturer or supplier. For tube diameters not listed in Table 5, the dimensional tolerances shall be as agreed upon by the purchaser and the manufacturer or supplier.

13. Finish

13.1 The finished tube shall be clean and free of foreign material, shall have smooth ends free of burrs, and shall be free of injurious external and internal imperfections. Minor defects may be removed, provided the dimensional tolerances of Section 12 are not exceeded.

14. Number of Tests

14.1 One sample shall be selected from lots of 5000 ft (1600 m) or less. For lots greater than 5000 ft (1600 m), one sample shall be selected from the first 5000 ft (1600 m), and one additional sample shall be selected from each additional 5000 ft (1600 m) or less in the lot. Samples are to be selected at random, and in no case shall more than one sample be taken from a single tube length. The size of the lot may be either the manufactured lot or the purchased lot at the manufacturer's option.

14.1.1 Chemical composition of the lot shall be the ingot manufacturer's analysis, except for hydrogen, which shall be determined on each sample from the lot.

14.1.2 One tension test shall be made on each sample.

14.1.3 One flattening test in accordance with 9.1 shall be made on each sample.

14.1.4 One reverse flattening test in accordance with 9.3 shall be made on each sample.

14.1.5 One flaring test in accordance with 10.1 shall be made on each sample.

14.2 If any test specimen shows defective machining or develops flaws due to preparation, the specimen may be discarded and another substituted.

14.3 If the percent of elongation of any tension test specimen is less than that specified in 8.1, and any part of the fracture is more than 3/4 in. (19 mm) from the center of the gage length as indicated by scratches marked

on the specimen before testing, the specimen may be discarded and another substituted.

14.4 Each length of finished tube shall be examined by the nondestructive test specified in 11.1.

15. Retests

15.1 If the results of any chemical or mechanical property test lot are not in conformance with the requirements of this specification, the lot may be retested at the option of the manufacturer. The frequency of the retest will double the initial number of tests. If the results of the retest conform to the specification, the retest values will become the test values for certification. Only original conforming test results or the conforming retest results shall be reported to the purchaser. If the results for the retest fail to conform to the specification, the material will be rejected in accordance with Section 20.

16. Test Specimens and Methods of Testing

16.1 The test specimens and the tests required by this specification shall conform to those described in Test Methods and Definitions A 370.

16.2 All routine mechanical tests shall be made at room temperature.

16.3 The chemical analysis shall be conducted by the standard techniques normally utilized by the manufacturer and the purchaser. In case of disagreement, Test Methods E 120 shall be used as the referee method except for carbon, oxygen, and hydrogen, which are not covered in Test Methods E 120. Test Method E 1409 shall be used as a referee method for oxygen, and Test Method E 1447 shall be used as a referee method for hydrogen.

17. Inspection

17.1 All tests and inspection required by this specification shall be made at the place of manufacture prior to shipment and at the manufacturer's expense unless otherwise specified, and shall be so conducted as not to interfere unnecessarily with the operation of the works. When specified in the order, the manufacturer shall notify the purchaser in time so that the purchaser may have his inspector present to witness any part of the tests that may be desired.

17.2 When agreed upon in writing between the manufacturer and the purchaser, a certification that the material conforms to the requirements of this specification shall be the basis for acceptance of the material. Otherwise the manufacturer shall report to the purchaser or his representative the results of the chemical analyses and mechanical tests made in accordance with this specification.

18. Rounding-Off Procedure

18.1 For purposes of determining conformance with the specifications contained herein, an observed or calculated value shall be rounded off to the nearest "unit" in the last right-hand significant digit used in expressing the limiting value. This is in accordance with the round-off method of Practice E 29.

19. Referee Test and Analysis

19.1 In the event of disagreement between the manufacturer and the purchaser on the conformance of the material to the requirements of this specification, a mutually acceptable referee shall perform the tests in question. The referee's testing shall be used in determining conformance of the material to this specification.

20. Rejection

20.1 Material not conforming to this specification or to authorized modifications shall be subject to rejection. Unless otherwise specified, rejected material may be returned to the manufacturer at the manufacturer's expense, unless the purchaser receives within 3 weeks of notice of rejection other instructions for disposition.

21. Certification

21.1 The manufacturer shall supply at least one copy of his report certifying that the material supplied has been inspected and tested in accordance with the requirements of this specification and that the results of chemical analysis and mechanical tests meet the requirements of this specification for the appropriate grade.

22. Product Marking

22.1 Each length of tube $\frac{1}{2}$ in. (13 mm) in outside diameter and larger, manufactured in accordance with this specification, shall be legibly marked, either by stenciling, stamping, or rolling, with the manufacturer's private identifying mark, the ASTM designation, the tube class, the grade, and heat number. On smaller than $\frac{1}{2}$ in. outside

diameter tubing that is bundled, the same information may be legibly stamped on a metal tag securely attached to each bundle.

23. Packaging and Package Marking

23.1 The tube shall be packaged in accordance with the manufacturer's standard practice, unless otherwise agreed upon between the manufacturer and the purchaser and so stated in the purchase order.

24. Keywords

24.1 seamless tubing; titanium; titanium alloy; tubing; welded/cold worked tubing; welded tubing

SPECIFICATION FOR TITANIUM AND TITANIUM ALLOY BARS AND BILLETS

SB-348

(Identical with ASTM Specification B 348-00 for all grades except for section 15.1, which requires mandatory certification.)

1. Scope

1.1 This specification covers annealed titanium and titanium alloy bars and billets as follows:

1.1.1 *Grade 1* — Unalloyed titanium.

1.1.2 *Grade 2* — Unalloyed titanium.

1.1.3 *Grade 3* — Unalloyed titanium.

1.1.4 *Grade 4* — Unalloyed titanium.

1.1.5 *Grade 5* — Titanium alloy (6% aluminum, 4% vanadium).

1.1.6 *Grade 6* — Titanium alloy (5% aluminum, 2.5% tin).

1.1.7 *Grade 7* — Unalloyed titanium plus 0.12 to 0.25% palladium.

1.1.8 *Grade 9* — Titanium alloy (3% aluminum, 2.5% vanadium).

1.1.9 *Grade 11* — Unalloyed titanium plus 0.12 to 0.25% palladium.

1.1.10 *Grade 12* — Titanium alloy (0.3% molybdenum, 0.8% nickel).

1.1.11 *Grade 13* — Titanium alloy (0.5% nickel, 0.05% ruthenium).

1.1.12 *Grade 14* — Titanium alloy (0.5% nickel, 0.05% ruthenium).

1.1.13 *Grade 15* — Titanium alloy (0.5% nickel, 0.05% ruthenium).

1.1.14 *Grade 16* — Unalloyed titanium plus 0.04 to 0.08% palladium.

1.1.15 *Grade 17* — Unalloyed titanium plus 0.04 to 0.08% palladium.

1.1.16 *Grade 18* — Titanium alloy (3% aluminum, 2.5% vanadium) plus 0.04 to 0.08% palladium.

1.1.17 *Grade 19* — Titanium alloy (3% aluminum, 8% vanadium, 6% chromium, 4% zirconium, 4% molybdenum).

1.1.18 *Grade 20* — Titanium alloy (3% aluminum, 8% vanadium, 6% chromium, 4% zirconium, 4% molybdenum) plus 0.04%–0.08% palladium.

1.1.19 *Grade 21* — Titanium alloy (15% molybdenum, 3% aluminum, 2.7% niobium, 0.25% silicon).

1.1.20 *Grade 23* — Titanium alloy (6% aluminum, 4% vanadium with extra low interstitial elements, ELI).

1.1.21 *Grade 24* — Titanium alloy (6% aluminum, 4% vanadium) plus 0.04% to 0.08% palladium.

1.1.22 *Grade 25* — Titanium alloy (6% aluminum, 4% vanadium) plus 0.3% to 0.8% nickel and 0.04% to 0.08% palladium.

1.1.23 *Grade 26* — Unalloyed titanium plus 0.08 to 0.14% ruthenium,

1.1.24 *Grade 27* — Unalloyed titanium plus 0.08 to 0.14% ruthenium,

1.1.25 *Grade 28* — Titanium alloy (0.3% aluminum, 2.5% vanadium plus 0.08 to 0.14% ruthenium),

1.1.26 *Grade 29* — Titanium alloy (6% aluminum, 4% vanadium, extra low interstitial, ELI plus 0.08% to 0.14% ruthenium),

1.1.27 *Grade 30* — Titanium alloy (0.3% cobalt, 0.05% palladium),

1.1.28 *Grade 31* — Titanium alloy (0.3% cobalt, 0.05% palladium),

1.1.29 *Grade 32* — Titanium alloy (5% aluminum, 1% tin, 1% zirconium, 1% vanadium, 0.8% molybdenum),

1.1.30 *Grade 33* — Titanium alloy (0.4% nickel, 0.015% palladium, 0.025% ruthenium, 0.15% chromium), and

1.1.31 *Grade 34* — Titanium alloy (0.4% nickel, 0.015% palladium, 0.025% ruthenium, 0.15% chromium).

1.2 The values stated in inch-pound units are to be regarded as the standard. The values given in parentheses are for information only.

2. Referenced Documents

2.1 *ASTM Standards:*

E 8 Test Methods for Tension Testing of Metallic Materials

E 29 Practice for Using Significant Digits in Test Data to Determine Conformance With Specifications

E 120 Methods for Chemical Analysis of Titanium and Titanium Alloys

E 1409 Test Method for the Determination of Oxygen in Titanium and Titanium Alloys by the Inert Gas Fusion Technique

E 1447 Test Method for the Determination of Hydrogen in Titanium and Titanium Alloys by the Inert Gas Fusion Thermal Conductivity Method

3. Terminology

3.1 *Descriptions of Terms Specific to This Standard:*

3.1.1 *bar, n* — a hot rolled, forged, or cold worked semifinished solid section product whose cross sectional area is equal to or less than 16 in.^{2} (10 323 mm^2); rectangular bar must be less than or equal to 10 in. (254 mm) in width and greater than 0.1875 in. (4.8 mm) in thickness.

3.1.2 *billet, n* — a solid semifinished section hot rolled or forged from an ingot, with a cross sectional area greater than 16 in.^{2} (10 323 mm^2) whose width is less than five times its thickness.

4. Ordering Information

4.1 Orders for material under this specification shall include the following information as applicable:

4.1.1 Grade number (Section 1),

4.1.2 Product classification (Section 3),

4.1.3 Chemistry (Table 1),

4.1.4 Mechanical properties (Table 3),

4.1.5 Marking (Section 16),

4.1.6 Finish (Section 8),

4.1.7 Packaging (Section 16),

4.1.8 Required reports (Section 15), and

4.1.9 Disposition of rejected material (Section 14).

5. Chemical Composition

5.1 The grades of titanium and titanium alloy metal covered by this specification shall conform to the requirements as to chemical composition prescribed in Table 1.

5.1.1 The elements listed in Table 1 are intentional alloy additions or elements that are inherent to the manufacture of titanium sponge, ingot, or mill product.

5.1.1.1 Elements other than those listed in Table 1 are deemed to be capable of occurring in the grades listed in Table 1 by and only by way of unregulated or unanalyzed scrap additions to the ingot melt. Therefore, product analysis for elements not listed in Table 1 shall not be required unless specified and shall be considered to be in excess of the intent of this specification.

5.1.2 Elements intentionally added to the melt must be identified, analyzed, and reported in the chemical analysis.

5.2 When agreed upon by the producer and purchaser and requested by the purchaser in his written purchase order, chemical analysis shall be completed for specific residual elements not listed in this specification.

5.3 *Product Analysis* — Product analysis tolerances do not broaden the specified heat analysis requirements, but cover variations between laboratories in the measurement of chemical content. The manufacturer shall not ship material that is outside the limits specified in Table 1 for the applicable grade. Product analysis limits shall be as specified in Table 2.

6. Mechanical Properties

6.1 Material supplied under this specification shall conform to the mechanical property requirements given in Table 3, as applicable.

6.2 Tension testing specimens are to be machined and tested in accordance with Test Methods E 8. Tensile properties shall be determined using a strain rate of 0.003 to 0.007 in./in./min through the specified yield strength, and then increasing the rate so as to produce failure in approximately one additional minute.

7. Dimensions, Weight, and Permissible Variation

7.1 *Size* — Tolerances on titanium and titanium alloy material covered by this specification shall be as specified in Tables 4 to 11, as applicable.

7.2 *Weight* — Quantity extras are applicable to individual items of a grade, thickness, width, and length ordered at one time for shipment at one time to one

TABLE 1
CHEMICAL REQUIREMENTS[A]

Element	Composition, %			
	Grade 1	Grade 2	Grade 3	Grade 4
Nitrogen, max	0.03	0.03	0.05	0.05
Carbon, max	0.08	0.08	0.08	0.08
Hydrogen,[B,C] max	0.015	0.015	0.015	0.015
Iron, max	0.20	0.30	0.30	0.50
Oxygen, max	0.18	0.25	0.35	0.40
Residuals[D,E,F] (each), max	0.1	0.1	0.1	0.1
Residuals[D,E,F] (total), max	0.4	0.4	0.4	0.4
Titanium[G]	balance	balance	balance	balance

Element	Composition, %					
	Grade 5	Grade 6	Grade 7	Grade 9	Grade 11	Grade 12
Nitrogen, max	0.05	0.03	0.03	0.03	0.03	0.03
Carbon, max	0.08	0.08	0.08	0.08	0.08	0.08
Hydrogen,[B,C] max	0.015	0.015	0.015	0.015	0.015	0.015
Iron, max	0.40	0.50	0.30	0.25	0.20	0.30
Oxygen, max	0.20	0.20	0.25	0.15	0.18	0.25
Aluminum	5.5 to 6.75	4.0 to 6.0	...	2.5 to 3.5	...	...
Vanadium	3.5 to 4.5	...	...	2.0 to 3.0	...	...
Tin	...	2.0 to 3.0	...	...	...	...
Palladium	...	...	0.12 to 0.25	...	0.12 to 0.25	...
Molybdenum	...	...	...	...	...	0.2 to 0.4
Zirconium	...	...	...	...	...	...
Nickel	...	...	...	...	...	0.6 to 0.9
Residuals[D,E,F] (each), max	0.1	0.1	0.1	0.1	0.1	0.1
Residuals[D,E,F] (total), max	0.4	0.4	0.4	0.4	0.4	0.4
Titanium[G]	balance	balance	balance	balance	balance	balance

Element	Composition, %					
	Grade 13	Grade 14	Grade 15	Grade 16	Grade 17	Grade 18
Nitrogen, max	0.03	0.03	0.05	0.03	0.03	0.03
Carbon, max	0.08	0.08	0.08	0.08	0.08	0.08
Hydrogen,[B,C] max	0.015	0.015	0.015	0.015	0.015	0.015
Iron, max	0.20	0.30	0.30	0.30	0.20	0.25
Oxygen, max	0.10	0.15	0.25	0.25	0.18	0.15
Ruthenium	0.04 to 0.06	0.04 to 0.06	0.04 to 0.06	...	...	...
Palladium	...	...	...	0.04 to 0.08	0.04 to 0.08	0.04 to 0.08
Nickel	0.4 to 0.6	0.4 to 0.6	0.4 to 0.6	...	...	...
Aluminum	...	...	...	...	...	2.5 to 3.5
Vanadium	...	...	...	...	...	2.0 to 3.0
Residuals,[D,E,F] max each	0.1	0.1	0.1	0.1	0.1	0.1
Residuals,[D,E,F] max total	0.4	0.4	0.4	0.4	0.4	0.4
Titanium[G]	balance	balance	balance	balance	balance	balance

(continued)

TABLE 1
CHEMICAL REQUIREMENTS [A] (CONT'D)

Element	Composition, %							
	Grade 19	Grade 20	Grade 21	Grade 23	Grade 24	Grade 25	Grade 26	Grade 27
Nitrogen, max	0.03	0.03	0.03	0.03	0.05	0.05	0.03	0.03
Carbon, max	0.05	0.05	0.05	0.08	0.08	0.08	0.08	0.08
Hydrogen,[B,C] max	0.02	0.02	0.015	0.0125	0.015	0.0125	0.015	0.015
Iron, max	0.30	0.30	0.40	0.25	0.40	0.40	0.30	0.20
Oxygen, max	0.12	0.12	0.17	0.13	0.20	0.20	0.25	0.18
Aluminum	3.0 to 4.0	3.0 to 4.0	2.5 to 3.5	5.5 to 6.5	5.5 to 6.75	5.5 to 6.75	...	...
Vanadium	7.5 to 8.5	7.5 to 8.5	...	3.5 to 4.5	3.5 to 4.5	3.5 to 4.5	...	...
Tin	...	...	...	...	...	...	...	...
Ruthenium	...	...	...	...	...	...	0.08–0.14	0.08–0.14
Palladium	...	0.04 to 0.08	...	...	0.04 to 0.08	0.04 to 0.08	...	...
Cobalt	...	...	...	...	...	...	...	...
Molybdenum	3.5 to 4.5	3.5 to 4.5	14.0 to 16.0	...	...	...	...	...
Zirconium	3.5 to 4.5	3.5 to 4.5	...	...	...	...	...	...
Chromium	5.5 to 6.5	5.5 to 6.5	...	...	...	...	...	...
Niobium	...	...	2.2 to 3.2	...	...	...	...	...
Silicon	...	...	0.15 to 0.25	...	...	...	...	...
Nickel	...	...	...	...	...	0.3 to 0.8	...	...
Residuals,[D,E,F] max each	0.15	0.15	0.1	0.1	0.1	0.1	0.1	0.1
Residuals,[D,E,F] max total	0.4	0.4	0.4	0.4	0.4	0.4	0.4	0.4
Titanium[G]	balance	balance	balance	balance	balance	balance	balance	balance

Element	Composition, %						
	Grade 28	Grade 29	Grade 30	Grade 31	Grade 32	Grade 33	Grade 34
Nitrogen, max	0.03	0.03	0.03	0.05	0.03	0.03	0.05
Carbon, max	0.08	0.08	0.08	0.08	0.08	0.08	0.08
Hydrogen,[B,C] max	0.015	0.015	0.015	0.015	0.015	0.015	0.015
Iron, max	0.25	0.25	0.30	0.30	0.25	0.30	0.30
Oxygen, max	0.15	0.13	0.25	0.35	0.11	0.25	0.35
Aluminum	2.5 to 3.5	5.5 to 6.5	...	...	4.5 to 5.5	...	...
Vanadium	2.0 to 3.0	3.5 to 4.5	...	...	0.6 to 1.4	...	...
Tin	...	...	...	...	0.6 to 1.4	...	...
Ruthenium	0.08 to 0.14	0.08 to 0.14	...	...	...	0.02–0.04	0.02–0.04
Palladium	...	...	0.04 to 0.08	0.04 to 0.08	...	0.01–0.02	0.01–0.02
Cobalt	...	...	0.20 to 0.80	0.20 to 0.80	...	...	...
Molybdenum	...	...	...	...	0.6 to 1.2	...	...
Chromium	...	...	...	...	...	0.1–0.2	0.1–0.2
Nickel	...	...	...	...	...	0.35–0.55	0.35–0.55
Zirconium	...	...	...	...	0.6 to 1.4	...	...
Silicon	...	...	...	...	0.06 to 0.14	...	...
Residuals,[D,E,F] (each), max	0.1	0.1	0.1	0.1	0.1	0.1	0.1
Residuals,[D,E,F] (total), max	0.4	0.4	0.4	0.4	0.4	0.4	0.4
Titanium[G]	balance	balance	balance	balance	balance	remainder	remainder

[A] Analysis shall be completed for all elements listed in this table for each grade. The analysis results for the elements not quantified in the table need not be reported unless the concentration level is greater than 0.1% each or 0.4% total.

[B] Lower hydrogen may be obtained by negotiation with the supplier.

[C] Final product analysis.

[D] Need not be reported.

[E] A residual is an element present in a metal or alloy in small quantities and is inherent to the manufacturing process but not added intentionally. In titanium these elements include aluminum, vanadium, tin, chromium, molybdenum, niobium, zirconium, hafnium, bismuth, ruthenium, palladium, yttrium, copper, silicon, cobalt, tantalum, nickel, boron, manganese and tungsten.

[F] The purchaser may, in his written purchase order, request analysis for specific residual elements not listed in this specification.

[G] The percentage of titanium is determined by difference.

TABLE 2
PERMISSIBLE VARIATIONS IN PRODUCT ANALYSIS

Element	Product Analysis Limits, Max or Range, %	Permissible Variation in Product Analysis
Nitrogen	0.05	+0.02
Carbon	0.10	+0.02
Hydrogen	0.02	+0.002
Iron	0.50	+0.15
Oxygen	0.30	+0.03
Oxygen	0.31 to 0.40	±0.04
Aluminum	2.5 to 6.75	±0.40
Vanadium	0.6 to 4.5	±0.15
Vanadium	7.5 to 8.5	±0.40
Tin	2.0 to 3.0	±0.15
Palladium	0.01 to 0.02	±0.002
Palladium	0.04 to 0.08	±0.005
Palladium	0.12 to 0.25	±0.02
Ruthenium	0.02 to 0.04	±0.005
Ruthenium	0.04 to 0.06	±0.005
Ruthenium	0.08 to 0.14	±0.01
Zirconium	0.6 to 1.4	±0.15
Chromium	0.1 to 0.2	±0.02
Chromium	5.5 to 6.5	±0.30
Niobium	2.2 to 3.2	±0.15
Molybdenum	0.2 to 0.4	±0.03
Molybdenum	0.6 to 1.2	±0.15
Molybdenum	3.5 to 4.5	±0.20
Molybdenum	14.0 to 16.0	±0.50
Nickel	0.3 to 0.9	±0.05
Silicon	0.06 to 0.25	±0.02
Cobalt	0.2 to 0.8	±0.05
Residuals[A] (each)	0.15	+0.02

[A] A residual is an element present in a metal or alloy in small quantities and is inherent to the manufacturing process but not added intentionally. In titanium these elements include aluminum, vanadium, tin, iron, chromium, molybdenum, niobium, zirconium, hafnium, bismuth, ruthenium, palladium, yttrium, copper, silicon, cobalt, tantalum, nickel, boron, manganese, and tungsten.

destination. Different lengths of the same size and grade may be combined for quantity extra. The shipping weight of any item of an ordered size in any finish may exceed the theoretical weight by as much as 10%.

8. Workmanship, Finish, and Appearance

8.1 Titanium and titanium alloy bar and billet shall be free from injurious external and internal imperfections of nature that will interfere with the purpose for which it is intended. Annealed material may be furnished as descaled, sandblasted, ground, or rough turned. The manufacturer shall be permitted to remove minor surface imperfections by spot grinding if such grinding does not reduce the thickness of the material below the minimum permitted by the tolerance for the thickness ordered.

9. Sampling

9.1 Samples for chemical analyses shall be representative of the material being tested. The utmost care must be used in sampling titanium for chemical analysis because of its great affinity for elements such as oxygen, nitrogen, and hydrogen. Therefore, in cutting samples for analysis, the operation should be carried out insofar as possible in a dust-free atmosphere. Chips should be collected from clean metal and tools should be clean and sharp. Samples for analysis should be stored in suitable containers.

9.2 At least two samples for chemical analysis shall be tested to determine chemical composition. Samples shall be taken from the ingot or from the opposite extremes of the product to be analyzed.

10. Methods of Chemical Analysis

10.1 The chemical analysis shall be conducted by the standard techniques normally utilized by the manufacturer and the purchaser. In case of disagreement, Test Methods E 120 shall be used as the referee method except for carbon, oxygen, and hydrogen which are not covered in Test Methods E 120. Test Method E 1409 shall be used as a referee method for oxygen and Test E 1447 shall be used as a referee method for hydrogen.

11. Retests

11.1 If the results of any chemical or mechanical property test lot are not in conformance with the requirements of this specification, the lot may be retested at the option of the manufacturer. The frequency of the retest will double the initial number of tests. If the results of the retest conform to the specification, then the retest values will become the test values for certification. Only original conforming test results or the conforming retest results shall be reported to the purchaser. If the results for the retest fail to conform to the specifcation, the material will be rejected in accordance with Section 14.

12. Referee Test and Analysis

12.1 In the event of disagreement between the manufacturer and the purchaser on the conformance of the material to the requirements of this specification, a mutually acceptable referee shall perform the tests in question. The referee's testing shall be used in determining conformance of the material to this specification.

13. Rounding-Off Procedure

13.1 For purposes of determining conformance with the specifications contained herein, an observed or a calculated value shall be rounded off to the nearest "unit"

TABLE 3
TENSILE REQUIREMENTS[A]

Grade	Tensile Strength, min		Yield Strength (0.2 % Offset) min or range		Elongation in 4*D*, min, %	Reduction of Area, min %
	ksi	MPa	ksi	MPa		
1	35	240	25	170	24	30
2	50	345	40	275	20	30
3	65	450	55	380	18	30
4	80	550	70	483	15	25
5	130	895	120	828	10	25
6	120	828	115	795	10	25
7	50	345	40	275	20	30
9	90	620	70	483	15	25
9[B]	90	620	70	483	12	25
11	35	240	25	170	24	30
12	70	483	50	345	18	25
13	40	275	25	170	24	30
14	60	410	40	275	20	30
15	70	483	55	380	18	25
16	50	345	40	275	20	30
17	35	240	25	170	24	30
18	90	620	70	483	15	25
18[B]	90	620	70	483	12	20
19[C]	115	793	110	759	15	25
19[D]	135	930	130 to 159	897 to 1096	10	20
19[E]	165	1138	160 to 185	1104 to 1276	5	20
20[C]	115	793	110	759	15	25
20[D]	135	930	130 to 159	897 to 1096	10	20
20[E]	165	1138	160 to 185	1104 to 1276	5	20
21[C]	115	793	110	759	15	35
21[D]	140	966	130 to 159	897 to 1096	10	30
21[E]	170	1172	160 to 185	1104 to 1276	8	20
23	120	828	110	759	10	15
23[B]	120	828	110	759	7.5[F], 6.0[G]	25
24	130	895	120	828	10	25
25	130	895	120	828	10	25
26	50	345	40	275	20	30
27	35	240	25	170	24	30
28	90	620	70	483	15	25
28[B]	90	620	70	483	12	20
29	120	828	110	759	10	25
29[B]	120	828	110	759	7.5[F], 6.0[G]	15
30	50	345	40	275	20	30
31	65	450	55	380	18	30
32	100	689	85	586	10	25
33	50	345	40	275	20	30
34	65	450	55	380	18	30

[A] These properties apply to longitudinal sections up to 3 in. (76 mm) in thickness with a maximum of 10 in.^{2} (64.5 cm^2). Mechanical properties of larger sections shall be negotiated between the manufacturer and purchaser.

[B] Properties for material in transformed-beta condition.

[C] Properties for solution treated condition.

[D] Properties for solution treated and aged condition—Moderate strength (determined by aging temperature).

[E] Properties for solution treated and aged condition—High strength (determined by aging temperature).

[F] For product section or wall thickness values <1.0 in.

[G] For product section or wall thickness values ≥1.0 in.

TABLE 4
PERMISSIBLE VARIATIONS IN SIZE FOR TITANIUM BARS—HOT-ROLLED ROUNDS AND SQUARES

Specified Size, in. (mm)	Size Variations, in. (mm)	Out-of-Round[A] or Out-of-Square,[B] in. (mm)
1/4 to 5/16 (6.35 to 7.94), incl	±0.005 (0.13)	0.008 (0.20)
Over 5/16 to 7/16 (7.94 to 11.11), incl	±0.006 (0.15)	0.009 (0.23)
Over 7/16 to 5/8 (11.11 to 15.88), incl	±0.007 (0.18)	0.010 (0.25)
Over 5/8 to 7/8 (15.88 to 22.22), incl	±0.008 (0.20)	0.012 (0.30)
Over 7/8 to 1 (22.22 to 25.40), incl	±0.009 (0.23)	0.013 (0.33)
Over 1 to 1 1/8 (25.40 to 28.58), incl	±0.010 (0.25)	0.015 (0.38)
Over 1 1/8 to 1 1/4 (28.58 to 31.75), incl	±0.011 (0.28)	0.016 (0.41)
Over 1 1/4 to 1 3/8 (31.75 to 34.92), incl	±0.012 (0.30)	0.018 (0.46)
Over 1 3/8 to 1 1/2 (34.92 to 38.10), incl	±0.014 (0.36)	0.021 (0.53)
Over 1 1/2 to 2 (38.10 to 50.80), incl	±1/64 (0.40)	0.023 (0.58)
Over 2 to 2 1/2 (50.80 to 63.50), incl	+1/32, −0 (0.79)	0.023 (0.58)
Over 2 1/2 to 3 1/2 (63.50 to 88.90), incl	+3/64, −0 (1.19)	0.035 (0.89)
Over 3 1/2 to 4 1/2 (88.90 to 114.30), incl	+1/16, −0 (1.59)	0.046 (1.17)

[A] Out-of-round is the difference between the maximum and minimum diameters of the bar, measured at the same cross section.

[B] Out-of-square section is the difference in the two dimensions at the same cross section of a square bar, each dimension being the distance between opposite faces.

TABLE 5
PERMISSIBLE VARIATIONS IN SIZE FOR TITANIUM BARS—HOT-ROLLED HEXAGONS AND OCTAGONS

Specified Sizes Between Opposite Sides, in. (mm)	Size Variation, in. (mm)	Maximum Difference, 3 Measurements, in. (mm)
1/4 to 1/2 (6.35 to 12.70), incl	±0.007 (0.18)	0.011 (0.28)
Over 1/2 to 1 (12.70 to 25.40), incl	±0.010 (0.25)	0.015 (0.38)
Over 1 to 1 1/2 (25.40 to 38.10), incl	±0.021 (0.53)	0.025 (0.64)
Over 1 1/2 to 2 (38.10 to 50.80), incl	±1/32 (0.79)	1/32 (0.79)
Over 2 to 2 1/2 (50.80 to 63.50), incl	±3/64 (1.19)	3/64 (1.19)
Over 2 1/2 to 3 1/2 (63.50 to 88.90), incl	±1/16 (1.59)	1/16 (1.59)

TABLE 6
PERMISSIBLE VARIATIONS IN SIZE FOR TITANIUM BARS—HOT-ROLLED FLATS

Specified Widths, in. (mm)	Thickness Variation from Specified Thickness, in. (mm)			Width Variation, in. (mm)
	1/8 to 1/2 in. (3.18 to 12.70 mm), incl	Over 1/2 to 1 in. (12.70 to 25.40 mm), incl	Over 1 to 2 in. (25.40 to 50.80 mm), incl	
To 1 (25.40), incl	±0.008 (0.20)	±0.010 (0.25)	...	+1/64, −1/64 (+0.40, −0.40)
Over 1 to 2 (25.40 to 50.80), incl	±0.012 (0.30)	±0.015 (0.38)	±1/32 (0.79)	+1/32, −1/32 (+0.79, −0.79)
Over 2 to 4 (50.80 to 101.60), incl	±0.015 (0.38)	±0.020 (0.51)	±1/32 (0.79)	+1/16, −1/32 (+1.59, −0.79)
Over 4 to 6 (101.60 to 152.40), incl	±0.015 (0.38)	±0.020 (0.51)	±1/32 (0.79)	+3/32, −1/16 (+2.38, −1.59)
Over 6 to 8 (152.40 to 203.20), incl	±0.016 (0.41)	±0.025 (0.64)	±1/32 (0.79)	+1/8, −5/32 (+3.18, −3.97)
Over 8 to 10 (203.20 to 254.0), incl	±0.021 (0.53)	±0.031 (0.79)	±1/32 (0.79)	+5/32, −3/16 (+3.97, −4.76)

TABLE 7
PERMISSIBLE VARIATIONS IN SIZE FOR TITANIUM BARS — COLD-FINISHED ROUNDS

Specified Size, in. (mm)	Size Variation,[A] in. (mm)
Over ½ to 1 (12.70 to 25.40), excl	±0.002 (0.05)
1 to 1½ (25.40 to 38.10), excl	±0.0025 (0.06)
1½ to 4 (38.10 to 101.60), incl	±0.003 (0.08)

[A] When it is necessary to heat treat or heat treat and pickle after cold finishing, because of special hardness or mechanical property requirements, tolerances are commonly double those shown in this table.

TABLE 8
PERMISSIBLE VARIATIONS IN SIZE FOR TITANIUM BARS — COLD-FINISHED HEXAGONS, OCTAGONS, AND SQUARES

Specified Size, in. (mm)	Size Variation,[A] in. (mm)
Over ½ to 1 (12.70 to 25.40), incl	+0, −0.004 (−0.10)
Over 1 to 2 (25.40 to 50.80), incl	+0, −0.006 (−0.16)
Over 2 to 3 (50.80 to 76.20), incl	+0, −0.008 (−0.20)
Over 3 (76.20)	+0, −0.010 (−0.25)

[A] When it is necessary to heat treat or heat treat and pickle after cold finishing, because of special hardness or mechanical property requirements, tolerances are commonly double those shown in this table.

in the last right-hand significant digit used in expressing the limiting value. This is in accordance with the round-off method of Practice E 29.

14. Rejection

14.1 Material not conforming to this specification or to authorized modifications shall be subject to rejection. Unless otherwise specified, rejected material may be returned to the manufacturer at the manufacturer's expense, unless the purchaser receives, within three weeks of notice of rejection, other instructions for disposition.

15. Certification

15.1 The manufacturer shall supply at least one copy of his report certifying that the material supplied has been inspected and tested in accordance with the requirements of this specification and that the results of chemical analysis and mechanical tests meet the requirements of this specification for the appropriate grade.

16. Packaging and Package Marking

16.1 *Marking* — Unless otherwise specified, individual pieces or bundles shall have attached a metal tag stamped with the purchase order number, the specification number, the nominal size and manufacturer's heat number, or shall be boxed and the box marked with the same information. In addition to the above identification, bars 1 in. (25.4 mm) and over in diameter or distance between parallel sides shall be stamped with the heat number within 2 in. (50.8 mm) of one end.

16.2 *Packaging* — Unless otherwise specified, material purchased under this specification may be packaged for shipment either by boxing, crating, single boarding, burlapping, or with no protection in accordance with the manufacturer's standard practice.

17. Keywords

17.1 bar; billet; titanium; titanium alloy

TABLE 9
PERMISSIBLE VARIATIONS IN SIZE FOR TITANIUM BARS—COLD-FINISHED FLATS

Size Width or Thickness, in. (mm)	Width Variations[A] from Specified Thicknesses, in. (mm)		Thickness Variation,[A] in. (mm)
	1/4 in. (6.35 mm) and under	Over 1/4 in. (6.35 mm)	
Over 3/8 to 1 (9.54 to 25.40), incl	±0.004 (0.10)	±0.002 (0.05)	±0.002 (0.05)
Over 1 to 2 (25.40 to 50.80), incl	±0.006 (0.15)	±0.003 (0.08)	±0.003 (0.08)
Over 2 to 3 (50.80 to 76.20), incl	±0.008 (0.20)	±0.004 (0.10)	±0.004 (0.10)
Over 3 to 4 1/2 (76.20 to 114.30), incl	±0.010 (0.25)	±0.005 (0.13)	±0.005 (0.13)

[A] When it is necessary to heat treat or heat treat and pickle after cold finishing, because of special hardness or mechanical property requirements, tolerances are commonly double those shown in this table.

TABLE 10
PERMISSIBLE VARIATIONS IN LENGTH FOR TITANIUM BARS—HOT-ROLLED AND COLD-FINISHED

Specified Sizes, all Shapes, in. (mm)	Length Variations, in. (mm)	
	To 12 ft (3.66 m), incl	Over 12 to 25 ft (3.66 to 7.62 m), incl
To 2 (50.80), incl	+1/2, −0 (+12.70)	+3/4, −0 (+19.05)
Over 2 to 4 (50.80 to 101.60), incl	+3/4, −0 (+19.05)	+1, −0 (+25.40)
Over 4 to 6 (101.60 to 152.40), incl	+1, −0 (+25.40)	+1 1/4, −0 (+31.75)
Over 6 to 9 (152.40 to 228.60), incl	+1 1/4, −0 (+31.75)	+1 1/2, −0 (+38.10)
Over 9 to 12 (228.60 to 304.80), incl	+1 1/2, −0 (+38.10)	+2, −0 (+50.80)
Machine Cut After Machine Straightening		
To 3 (76.20), incl	+1/8, −0 (+3.18)	+3/16, −0 (+4.76)
Over 3 to 6 (76.20 to 152.40), incl	+3/16, −0 (+4.76)	+1/4, −0 (+6.35)
Over 6 to 9 (152.40 to 228.60), incl	+1/4, −0 (+6.35)	+5/16, −0 (+7.94)
Over 9 to 12 (228.60 to 304.80), incl	+1/2, −0 (+12.70)	+1/2, −0 (+12.70)

TABLE 11
CAMBER FOR HOT-ROLLED AND COLD-FINISHED TITANIUM BARS FOR MACHINING

	Tolerance
Hot rolled	1/8 in. (3.18 mm) in any 5 ft (1524 mm), but may not exceed 1/8 × No. of ft in length / 5
Cold finished	1/16 in. (1.59 mm) in any 5 ft (1524 mm), but may not exceed 1/16 × No. of ft in length / 5

NOTE — Camber is the greatest deviation of a side from a straight line. Measurement is taken on the concave side of the bar with a straightedge. Unless otherwise specified, hot-rolled and cold-finished bars for machining purposes are furnished machine straightened to the tolerances specified in this table.

SPECIFICATION FOR COPPER AND COPPER-ALLOY SEAMLESS CONDENSER AND HEAT EXCHANGER TUBES WITH INTEGRAL FINS

SB-359

(Identical with ASTM Specification B 359-95 for the alloys covered except for editorial differences. Certification has been made mandatory.)

1. Scope

1.1 This specification describes seamless copper and copper alloy tubing on which the external or internal surface, or both, has been modified by a cold-forming process to produce an integral enhanced surface for improved heat transfer. The tubes are used in surface condensers, evaporators, and heat exchangers and are normally made from the following copper or copper alloys:

Copper or Copper Alloy UNS No.	Type of Metal
C12200	DHP phosphorized, high residual phosphorus
C44300	Admiralty Metal Types B,
C44400	C, and
C44500	D
C70600	90-10 Copper-Nickel
C71000	80-20 Copper-Nickel Type A
C71500	70-30 Copper-Nickel

NOTE 1 — Refer to Practice E 527 for explanation of Unified Numbering System (UNS).

1.2 The following safety hazard caveat pertains only to the test methods described in this specification.

1.2.1 *This standard does not purport to address all of the safety concerns, if any, associated with its use. It is the responsibility of the user of this standard to establish appropriate safety and health practices and determine the applicability of regulatory limitations prior to use.*

NOTE 2 — A complete metric companion, B 359M, has been developed; therefore, no metric equivalents are presented.

2. Referenced Documents

2.1 *ASTM Standards:*

B 153 Test Method for Expansion (Pin Test) of Copper and Copper-Alloy Pipe and Tubing

B 154 Test Method for Mercurous Nitrate Test for Copper and Copper Alloys

B 170 Specification for Oxygen-Free Electrolytic Copper — Refinery Shapes

B 359M Specification for Copper and Copper-Alloy Seamless Condenser and Heat Exchanger Tubes with Integral Fins [Metric]

E 3 Methods of Preparation of Metallographic Specimens

E 8 Test Methods for Tension Testing of Metallic Materials

E 29 Practice for Using Significant Digits in Test Data to Determine Conformance With Specifications

E 53 Methods for Chemical Analysis of Copper

E 62 Test Methods for Chemical Analysis of Copper and Copper Alloys (Photometric Methods)

E 112 Test Methods for Determining Average Grain Size

E 118 Test Methods for Chemical Analysis of Copper-Chromium Alloys

E 243 Practice for Electromagnetic (Eddy-Current) Examination of Copper and Copper-Alloy Tubes

E 255 Practice for Sampling Copper and Copper Alloys for Determination of Chemical Composition

E 478 Test Methods for Chemical Analysis of Copper Alloys

E 527 Practice for Numbering Metals and Alloys (UNS)

3. Terminology

3.1 *Definitions:*

3.1.1 *flattening* — this term shall be interpreted as that condition which allows a micrometer caliper, set at three times the wall thickness, to pass over the tube freely throughout the flattened part, except at the points where the change in element of flattening takes place.

3.1.2 *lengths* — straight pieces of the product.

3.1.2.1 *lengths, specific* — straight lengths that are uniform in length, as specified, and subject to established length tolerances.

3.1.3 *tube, seamless* — a tube produced with a continuous periphery in all stages of operation.

3.1.3.1 *tube, condenser* — See *tube, heat exchanger.*

3.1.3.2 *tube, heat exchanger* — a tube manufactured to special requirements as to dimensional tolerances, finish, and temper for use in condensers and other heat exchangers.

3.1.3.3 *tube, heat exchangers with integral enhanced surface* — a tube having an external or internal surface, or both, modified by a cold forming operation, to produce an enhanced surface for improved heat transfer. The enhancement may take the form of longitudinal or helical fins or ridges, or both, as well as modifications thereto.

3.1.4 *unaided eye* — corrective spectacles necessary to obtain normal vision may be used.

4. Ordering Information

4.1 Purchase for tubes described in this specification should include the following, as required, to describe the tubes adequately.

4.1.1 ASME designation and year of issue,

4.1.2 Alloy,

4.1.3 Temper,

4.1.4 Dimensions: diameter, wall thickness, length and location of unenhanced surfaces, and total tube length. Configuration of enhanced surfaces shall be as agreed upon between the manufacturer and the purchaser (Refer to Figs. 1, 2, and 3),

4.1.5 Whether the product is to be subsequently welded,

4.1.6 Quantity,

4.1.7 Certification, which is mandatory,

4.1.8 Mill test report, when required,

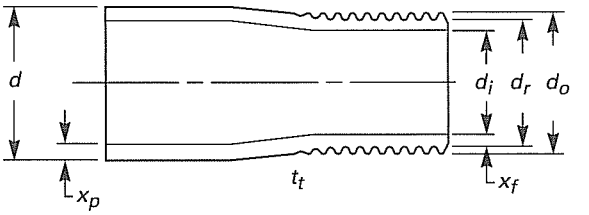

d = outside diameter of unenhanced section

d_o = outside diameter of the enhanced section

d_r = root diameter of the enhanced section

d_i = inside diameter of the enhanced section

x_p = wall thickness of the unenhanced section

x_f = wall thickness of the enhanced section

t_t = transition taper

Note—The outside diameter over the enhanced section will not normally exceed the outside diameter of the unenhanced section.

FIG. 1 OUTSIDE DIAMETER ENHANCED TUBE NOMENCLATURE

4.1.9 When heat identification or traceability is required.

5. General Requirements

5.1 Tubes covered by this specification shall normally be furnished with unenhanced ends, but may be furnished with enhanced ends or stripped ends from which the outside diameter enhancement has been removed by machining.

5.1.1 The enhanced sections of the tube in the as-fabricated temper are in the cold-worked condition produced by the enhancing operation. The unenhanced sections of the tube shall be in the annealed or light drawn temper, and shall be suitable for rolling-in operations.

6. Materials and Manufacture

6.1 The material shall be of such quality and purity that the finished products shall conform to the requirements prescribed in this specification and shall be cold-worked to the specified size. To comply with this specification, the enhanced and unenhanced material must be homogeneous.

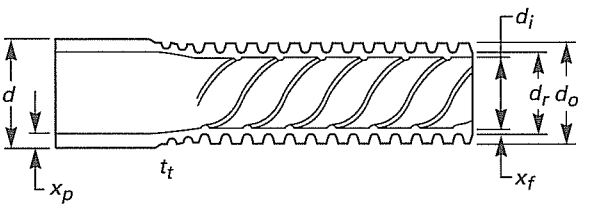

d = outside diameter of unenhanced section

d_o = outside diameter over the enhanced section

d_r = root diameter of the enhanced section

d_i = inside diameter of the enhanced section

x_p = wall thickness of the unenhanced section

x_f = wall thickness of the enhanced section

t_t = transition taper

FIG. 2 OUTSIDE DIAMETER AND INSIDE DIAMETER ENHANCED TUBE NOMENCLATURE

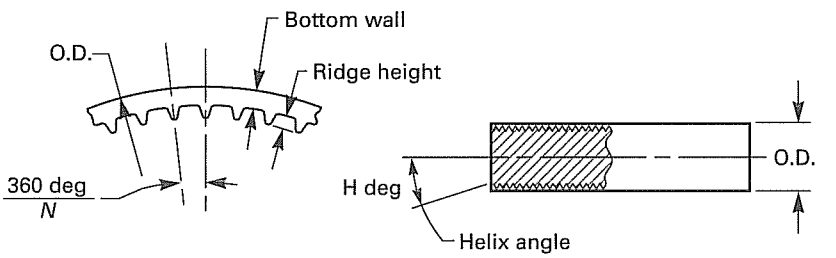

FIG. 3 INSIDE DIAMETER ENHANCED TUBE NOMENCLATURE

6.2 Due to the discontinuous nature of the processing of castings into wrought products, it is not practical to identify specific casting analysis with a specific quantity of finished material.

6.3 When heat identification is required, the purchaser shall specify the details desired in the purchase order or contract.

7. Chemical Composition

7.1 The tubes shall conform to the chemical requirements specified in Table 1.

7.2 These specification limits do not preclude the presence of other elements. Limits for unnamed elements may be established by agreement between manufacturer or supplier and purchaser.

7.2.1 For alloys in which copper is specified as the remainder, copper may be taken as the difference between the sum of the results for all specified elements and 100% for the particular alloy.

7.2.1.1 When analyzed, copper plus the sum of results for specified elements shall be as shown in the following table.

Copper Alloy UNS No.	Copper Plus Named Elements, % min
C70600	99.5
C71000	99.5
C71500	99.5

TABLE 1
CHEMICAL REQUIREMENTS

Copper or Copper Alloy UNS No.	Composition, %												
	Copper[A]	Tin	Aluminum	Nickel, incl Cobalt	Lead, Max.	Iron	Zinc	Manganese	Arsenic	Antimony	Phosphorus	Chromium	Other Named Elements
C12200	99.9 min.	...	...	...	...	...	...	...	...	...	0.015–0.040	...	...
C44300	70.0–73.0	0.9–1.2	...	...	0.07	0.06 max.	Remainder	...	0.02–0.06	...	...	...	...
C44400	70.0–73.0	0.9–1.2	...	...	0.07	0.06 max.	Remainder	...	...	0.02–0.10	...	...	...
C44500	70.0–73.0	0.9–1.2	...	...	0.07	0.06 max.	Remainder	...	...	...	0.02–0.10	...	...
C70600	Remainder	...	...	9.0–11.0	0.05	1.0–1.8	1.0 max.[B]	1.0 max.	...	...	[B]	...	[B]
C71000	Remainder	...	...	19.0–23.0	0.05	0.50–1.0	1.0 max.[B]	1.0 max.	...	...	[B]	...	[B]
C71500	Remainder	...	...	29.0–33.0	0.05	0.40–1.0	1.0 max.[B]	1.0 max.	...	...	[B]	...	[B]

[A] Copper (including silver).
[B] When the product is for subsequent welding applications, and so specified in the contract or purchase order, zinc shall be 0.50% max., lead 0.02%, phosphorus 0.02% max., sulfur and carbon 0.05% max.

7.2.2 For alloys in which zinc is specified as the remainder, either copper or zinc may be taken as the difference between the sum of the results of specified elements analyzed and 100%.

7.2.2.1 When all specified elements are determined the sum of results plus copper shall be as follows:

Copper Alloy UNS No.	Copper Plus Named Elements, % Min.
C44300	99.6
C44400	99.6
C44500	99.6

8. Temper

8.1 The tube after enhancing shall be supplied, as specified, in the annealed or as-fabricated temper.

8.1.1 The enhanced sections of tubes in the as-fabricated temper are in the cold-worked condition produced by the fabricating operation.

8.1.2 The unenhanced sections of tubes in the as-fabricated temper are in the temper of the tube prior to enhancing, annealed or light drawn, and suitable for rolling-in operations.

8.1.3 Copper alloys C44300, C44400, and C44500, furnished in the as-fabricated temper, must be stress relief annealed after enhancing and be capable of meeting the requirements of the mercurous nitrate test in section 12. Stress relief annealing of the copper and other copper alloys described by this specification is not required.

8.1.3.1 Some annealed tubes, when subjected to aggressive environments, may be subject to stress-corrosion cracking failure because of the residual tensile stresses developed in straightening. For such applications, it is recommended that tubes of copper alloys C44300, C44400, and C44500, be subjected to a stress relieving thermal treatment subsequent to straightening. When required, this must be specified on the purchase order or contract. Tolerance for roundness and length, and the condition for straightness, for tube so ordered, shall be to the requirements agreed upon between the manufacturer and purchaser.

8.1.4 The enhanced sections of tubes in the annealed temper shall show complete recrystallization when examined in the cross-section of the tube at a magnification of 75 diameters. Average grain size shall be within the limits agreed upon between the manufacturer and purchaser, when measured in the wall of the tube outside of the enhanced area.

9. Tensile Properties

9.1 Prior to the enhancing operations, the tube shall conform to the requirements for tensile properties prescribed in Table 2.

10. Expansion Test

10.1 The unenhanced sections of all tubes selected for test shall conform to the requirements prescribed in Table 3 when tested in accordance with B 153. The expanded tube shall show no cracking or rupture visible to the unaided eye.

11. Flattening Test

11.1 The unenhanced lengths of tube selected for tests shall be flattened on different elements and a flattened element shall show no cracking or rupture visible to the unaided eye. (Corrective spectacles necessary to obtain normal vision may be used.)

TABLE 2
TENSILE REQUIREMENTS

Copper or Copper Alloy UNS No.	Temper Designation		Tensile Strength, Min.	Yield Strength,[B] Min.
	Standard	Former	ksi[A]	ksi[A]
C12200	061	Annealed	30	9[C]
C12200	H55	Light-drawn	36	30
C44300, C44400, C44500	061	Annealed	45	15
C70600	061	Annealed	40	15
C71000	061	Annealed	45	16
C71500	061	Annealed	52	18

[A] ksi = 1000 psi.
[B] At 0.5% extension under load.
[C] Light straightening operation is permitted.

TABLE 3
EXPANSION REQUIREMENTS

Temper Designation		Copper or Copper Alloy UNS No.	Expansion of Tube Outside Diameter in Percent of Original Outside Diameter
Standard	Former		
061	Annealed	C12200	30
H55	Light-drawn	C12200	20
061	Annealed	C44300, C44400, C44500	20
061	Annealed	C70600	30
061	Annealed	C71000	30
061	Annealed	C71500	30

12. Mercurous Nitrate Test

12.1 Each specimen shall withstand an immersion in the mercurous nitrate solution as prescribed in Test Method B 154 without cracking. The enhanced specimens shall include the finished tube ends.

12.2 This test is required only for copper alloys C44300, C44400, and C44500.

13. Nondestructive Testing

13.1 Each tube shall be subjected to a nondestructive test. Tubes shall normally be tested in the as-fabricated temper, but, at the option of the manufacturer, may be tested in the annealed temper. Unless otherwise specified, the manufacturer shall have the option of testing the tubes by one of the following test methods.

13.1.1 *Eddy-Current Test* — The tubes shall be passed through an eddy-current testing unit adjusted per the requirements of 19.3.3 to provide information on the suitability of the tube for the intended application.

13.1.1.1 Tubes causing irrelevant signals because of moisture, soil, and like effects may be reconditioned and retested. Such tubes shall be considered to conform, should they not cause output signals beyond the acceptable limits.

13.1.1.2 Tubes causing irrelevant signals because of visible and identifiable handling marks may be retested by the hydrostatic test prescribed in 13.1.2 or the pneumatic test prescribed in 13.1.3.

13.1.1.3 Unless otherwise agreed, tubes meeting the requirements of either test shall be considered to conform if the tube dimensions are within the prescribed limits.

13.1.2 *Hydrostatic Test* — Each tube, without showing evidence of leakage, shall withstand an internal hydrostatic pressure sufficient to subject the material in the unenhanced region of the tube to a fiber stress of 7000 psi, as determined by the following equation for thin hollow cylinders under tension.

$$P = 2St/(D - 0.8t)$$

TABLE 4
DIAMETER TOLERANCES

Specified Diameter, in.	Tolerance, in.
0.500 and under	±0.002
Over 0.500–0.740, incl	±0.0025
Over 0.740–1.000, incl	±0.003

TABLE 5
LENGTH TOLERANCES

Specified Length, ft	Tolerance, All Plus, in.
Up to 20, incl	1/8
Over 20–30, incl	5/32
Over 30–60, incl	1/4

where:

P = hydrostatic pressure, psig
t = thickness of tube wall, in.
D = outside diameter of tube, in.
S = allowable fiber stress of the material, psi

The tube need not be tested at a hydrostatic pressure of over 1000 psi, unless so specified.

13.1.3 *Pneumatic Test* — Each tube, after enhancing, shall withstand a minimum internal air pressure of 250 psig for 5 s and any evidence of leakage shall be cause for rejection. The test method used shall permit easy visual detection of any leakage, such as having the tube under water, or by the pressure differential method.

14. Dimensions and Permissible Variations

14.1 *Diameter* — The outside diameter of the unenhanced sections shall not vary by more than the amount shown in Table 4, as measured by "go" and "no go" ring gages. The diameter over the enhanced sections shall not exceed the diameter of the plain sections involved, as determined by a "go" ring gage unless otherwise specified.

14.2 *Wall Thickness* — No tube shall be less than the minimum thickness specified in the plain sections or in the enhanced sections.

14.3 *Length* — The length of the tubes shall not be less than that specified when measured at a temperature of 68°F, but may exceed the specified value by the amounts given in Table 5.

14.3.1 The length of the unenhanced end(s) as measured from the tube end to the first fin disk impression, shall not be less than that specified, but may exceed the specified value by ½ in.

TABLE 6
SQUARENESS OF CUT

Specified Outside Diameter, in.	Tolerance
Up to 5/8, incl	0.010 in.
Over 5/8	0.016 in./in. of diameter

14.4 *Squareness of Cut* — The departure from squareness of the end of any tube shall not exceed the values given in Table 6.

15. Workmanship, Finish, and Appearance

15.1 Roundness, straightness, uniformity of wall thickness, and condition of inner and outer surfaces of the tube shall be such as to make it suitable for the intended application. Unless otherwise specified on the purchase order, the cut ends of the tubes shall be deburred by use of a rotating wire wheel or other suitable tool.

15.2 Annealed-temper or stress-relieved tubes shall be clean and smooth but may have a superficial, dull iridescent film on both the inside and the outside surface. Tubes in the as-fabricated temper may have a superficial film of finning lubricant on the surfaces.

16. Sampling

16.1 The lot size, portion size, and selection of sample pieces shall be as follows:

16.1.1 *Lot Size* — 600 tubes or 10 000 lbs or fraction of either, whichever constitutes the greater weight.

16.1.2 *Portion Size* — Sections from two individual lengths of finished product.

16.1.2.1 Samples taken for purposes of test shall be selected in a manner that will correctly represent the material furnished and avoid needless destruction of finished material when samples representative of the material are available from other sources.

16.2 *Chemical Composition* — Samples for determining composition shall be taken in accordance with Practice E 255. The minimum weight of the composite sample shall be 150 g.

16.2.1 Instead of sampling in accordance with Practice E 255, the manufacturer shall have the option of sampling at the time castings are poured or sampling the semi-finished product. When samples are taken during the course of manufacture, sampling of the finished product is not required and the minimum number of samples to be taken shall be as follows:

16.2.1.1 When samples are taken at the time castings are poured, one sample shall be taken for each group of castings poured simultaneously from the same source of molten metal.

16.2.1.2 When samples are taken from the semi-finished product, one sample shall be taken to represent each 10 000 lbs or fraction thereof, except that not more than one sample shall be required per piece.

17. Number of Tests and Retest

17.1 *Tests:*

17.1.1 Chemical composition shall be determined as the arithmetic mean of at least two replicate determinations of each specified element.

17.1.2 All other tests specified in sections 8 through 12 shall be conducted on specimens taken from each of the samples selected in accordance with 16.1.

17.2 *Retest:*

17.2.1 One retest shall be permitted for each requirement under the same conditions stated for the original test.

17.2.2 Should the result of a retest fail to conform with the requirements of the product specification, the material shall be rejected.

18. Specimen Preparation

18.1 Preparation of the analytical test specimen shall be the responsibility of the reporting laboratory.

18.2 Specimens for the microscopic examination shall be prepared in accordance with Methods E 3.

18.2.1 The surface of the specimen shall approximate a radial longitudinal section of the tube.

18.3 Specimens for the expansion test shall be of suitable length so that they can be expanded the required amount. Both ends shall either be faced square in a lathe, or suitably prepared so as to have a smooth surface free from scratches or burrs, and with both edges slightly chamfered.

18.4 Specimens for the flattening test require no special preparation, but shall be of the length necessary to accommodate the test.

18.5 Specimens for the mercurous nitrate test shall be 6 inches in length and shall be taken from the enhanced and unenhanced portion of each sample.

18.6 Tension test specimens shall be of the full section of the tube and shall conform to the requirements of the 'Test Specimen' section of Test Methods E 8, unless the limitations of the testing machine precludes the use of such specimen in which case test specimens conforming to specimen No. 1 of Fig. 13 in Test Methods E 8 shall be used.

18.6.1 Whenever test results are obtained from full-sized and machined specimens and they differ, the results from the full-sized specimen shall prevail for determining conformance to the specification.

18.6.2 Although a considerable range of testing speed is permissible, the range of stressing to the yield strength should not exceed 100 ksi/min. Above the yield strength the movement per minute of the testing machine head under load shall not exceed 0.5 in./in. of the gage length, or distance between grips for a full section specimen.

19. Test Methods

19.1 *Chemical Composition:*

19.1.1 The methods used for routine determination of specification compliance shall be at the discretion of the reporting laboratory.

19.2 Chemical composition for all other alloys, in case of disagreement, shall be determined as follows:

Element	Range	Test Method
Copper	99.75 to 99.99	E 53, Electrolytic
Copper	70.0 to 99.75	E 478, Electrolytic
Tin	0.9 to 1.2	E 478, Photometric
Aluminum	1.8 to 6.5	E 478
Nickel incl. Cobalt	4.8 to 33.0	E 478, Gravimetric
Lead	0.05 to 0.10	E 478, Atomic Absorption
Iron	0.04 to 1.8	E 478
Zinc	14.0 to 30.0	E 478, Titrimetric
Zinc	to 1.0	E 478, Atomic Absorption
Manganese	to 1.0	E 62
Arsenic	0.02 to 0.5	E 62
Antimony	0.02 to 0.1	E 62
Phosphorus	0.001 to 0.04	E 62
Chromium	0.30 to 0.70	E 118

19.2.1 Test methods for the determination of elements resulting from contractual or purchase order agreements shall be as agreed upon between the manufacturer or supplier and purchaser. (Refer to Table 1, Footnote D.)

19.3 The material shall conform to the physical requirements and mechanical properties enumerated in this specification when tested in accordance with the following methods:

Test	ASTM Designation
Grain Size	E 112
Expansion (Pin Test)	B 153
Mercurous Nitrate	B 154
Tension	E 8
Eddy-Current Test	E 243

19.3.1 *Grain Size* — The intercept method shall be used to determine grain size in case of dispute.

19.3.2 *Test Method B 154* — **Warning:** This test method involves the use of a mercury compound that is classified as a health hazard in use and disposal.

19.3.3 *Eddy-Current* — Testing shall follow the procedures of Practice E 243, except that the sensitivity settings of the test equipment shall be adjusted using the hole sizes specified in Table 7 of this specification. The holes for sensitivity adjustment shall be drilled radially through an unenhanced portion of the standard tube or through a length of prime surface tube of the same size, temper, and composition. By mutual agreement between the manufacturer or supplier and purchaser, discontinuities of other contours may be used on the calibration standard.

19.3.3.1 Tubes that do not actuate the signaling device on the eddy current tester shall be considered as conforming to the requirements of this test.

20. Significance of Numerical Limits

20.1 For purposes of determining compliance with the specified limits of the properties listed in the following table, an observed or calculated value shall be rounded as indicated in accordance with the rounding method of Practice E 29.

Property	Rounded Unit for Observed or Calculated Value
Chemical composition	Nearest unit in the last right-hand place of figures
Tensile strength, yield strength	Nearest ksi
Grain size:	Nearest multiple of 0.005 mm
Up to 0.055 mm, incl, Over 0.055 mm	to the nearest 0.010 mm

21. Inspection

21.1 The manufacturer shall inspect and make necessary tests to verify that the tubes furnished conform to the requirements of this specification.

21.2 Should the purchaser additionally elect to perform his own inspection, the manufacturer shall, without charge, afford the inspector all reasonable facilities to determine that the tubes being furnished conform to the requirements of this specification.

21.2.1 Except for chemical analysis all tests and inspection shall be made at the place of manufacture prior to shipment, unless otherwise specified, and shall be so conducted as not to interfere with the operation of the facility.

21.3 When automated finishing and inspection equipment is available at a facility, purchaser and manufacturer may, by mutual agreement, accomplish the final inspection simultaneously.

TABLE 7
DIAMETER OF DRILLED HOLES

Nominal Diameter Over Enhanced or Unenhanced Section, in.	Diameter of Drilled Holes, in.
1/4–5/8, incl	0.042–No. 58 drill
Over 5/8–1, incl	0.046–No. 56 drill

22. Rejection and Rehearing

22.1 Material that fails to conform to the requirements of this specification when inspected or tested by the purchaser, or purchaser's agent, may be rejected.

22.2 Rejection shall be reported to the manufacturer, or supplier, promptly and in writing.

22.3 The manufacturer or supplier may make claim for a rehearing when dissatisfied with the test results.

23. Certification

23.1 A manufacturer's certificate of compliance shall be furnished to the purchaser stating that samples representing each lot have been tested and inspected in accordance with this specification and the requirements have been met.

24. Mill Test Report

24.1 When specified on the purchaser order or contract, the manufacturer or supplier shall furnish to the purchaser a manufacturer's test report showing results of the required tests.

25. Packaging and Package Marking

25.1 The material shall be separated by alloy, size, and temper. It shall be packaged in such a manner as to ensure acceptance by common carrier for transportation

and to afford protection from the normal hazards of transportation.

25.2 Each shipping unit shall be legibly marked with the name of supplier, purchase order number, metal or alloy designation, temper, size, total length or piece count, or both.

25.3 The specification number shall be shown when specified.

26. Keywords

26.1 copper; copper alloys; seamless; condenser; heat exchanger; tube; integral fins

SPECIFICATION FOR SEAMLESS AND WELDED UNALLOYED TITANIUM AND TITANIUM ALLOY WELDING FITTINGS

SB-363

(Identical with ASTM Specification B 363-00 for all grades except for section 11.3, which requires mandatory certification.)

1. Scope

1.1 This specification covers fittings intended for general corrosion-resisting and elevated-temperature services, factory made from unalloyed titanium and titanium alloys. The term welding fittings applies to butt-welding parts such as 45° and 90° elbows, 180° returns, caps, tees, reducers, lap-joint stub ends, and other types.

1.2 *This standard does not purport to address all of the safety concerns, if any, associated with its use. It is the responsibility of the user of this standard to establish appropriate safety and health practices and determine the applicability of regulatory limitations prior to use.*

2. Referenced Documents

2.1 *ASTM Standards:*

B 265 Specification for Titanium and Titanium Alloy Strip, Sheet, and Plate

B 338 Specification for Seamless and Welded Titanium and Titanium Alloy Tubes for Condensers and Heat Exchangers

B 348 Specification for Titanium and Titanium Alloy Bars and Billets

B 367 Specification for Titanium and Titanium Alloy Castings

B 381 Specification for Titanium and Titanium Alloy Forgings

B 600 Practice for Descaling and Cleaning Titanium and Titanium Alloy Surfaces

B 861 Specification for Titanium and Titanium Alloy Seamless Pipe

B 862 Specification for Titanium and Titanium Alloy Welded Pipe

2.2 *ANSI Standards:*

B16.9 Wrought Steel Butt-Welding Fittings

B36.19 Stainless Steel Pipe

2.3 *Manufacturers' Standardization Society of the Valve and Fittings Industry Standards:*

SP-25 Standard Marking System for Valves, Fittings, Flanges, and Unions

SP-43 Standard Practice for Light Weight Stainless Steel Butt-Welding Fittings

2.4 *ASME Standard:*

ASME Boiler and Pressure Vessel Code, Sections VIII and IX

3. Ordering Information

3.1 Orders for material to this specification shall include the following information as required:

3.1.1 Quantity,

3.1.2 Grade number,

3.1.3 Pipe size and schedule,

3.1.4 Method of manufacture and finish,

3.1.5 Restrictive chemistry, if desired,

3.1.6 Nondestructive tests,

3.1.7 Packaging, and

3.1.8 Inspection and required reports.

4. Material

4.1 The titanium for welding fittings may consist of billets, bars, plates, seamless or welded pipe or tube that conforms to all the requirements for manufacturing process, testing, chemical composition, and mechanical properties prescribed in Specifications B 861 and B 862 for the particular grades referred to in Table 1.

TABLE 1
PERMISSIBLE RAW MATERIALS

Grade[A]	Product and ASTM Designation					
	Pipe	Tube	Plate	Bar and Billet	Casting	Forging
WPT1	B 861/B 862 Grade 1	B 338 Grade 1	B 265 Grade 1	B 348 Grade 1	B 367 Grade C1	B 381 Grade F-1
WPT2	B 861/B 862 Grade 2	B 338 Grade 2	B 265 Grade 2	B 348 Grade 2	B 367 Grade C2	B 381 Grade F-2
WPT3	B 861/B 862 Grade 3	B 338 Grade 3	B 265 Grade 3	B 348 Grade 3	B 367 Grade C3	B 381 Grade F-3
WPT7	B 861/B 862 Grade 7	B 338 Grade 7	B 265 Grade 7	B 348 Grade 7	B 367 Grade C7	B 381 Grade F-7
WPT9	B 861/B 862 Grade 9	B 338 Grade 9	B 265 Grade 9	B 348 Grade 9	...	B 381 Grade F-9
WPT11	B 861/B 862 Grade 11	B 338 Grade 11	B 265 Grade 11	B 348 Grade 11	B 367 Grade C11	B 381 Grade F-11
WPT12	B 861/B 862 Grade 12	B 338 Grade 12	B 265 Grade 12	B 348 Grade 12	...	B 381 Grade F-12
WPT13	B 861/B 862 Grade 13	B 338 Grade 13	B 265 Grade 13	B 348 Grade 13	...	B 381 Grade F-13
WPT14	B 861/B 862 Grade 14	B 338 Grade 14	B 265 Grade 14	B 348 Grade 14	...	B 381 Grade F-14
WPT15	B 861/B 862 Grade 15	B 338 Grade 15	B 265 Grade 15	B 348 Grade 15	...	B 381 Grade F-15
WPT16	B 861/B 862 Grade 16	B 338 Grade 16	B 265 Grade 16	B 348 Grade 16	...	B 381 Grade F-16
WPT17	B 861/B 862 Grade 17	B 338 Grade 17	B 265 Grade 17	B 348 Grade 17	...	B 381 Grade F-17
WPT18	B 861/B 862 Grade 18	B 338 Grade 18	B 265 Grade 18	B 348 Grade 18	...	B 381 Grade F-18
WPT19	B 861/B 862 Grade 19	...	B 265 Grade 19	B 348 Grade 19	...	B 381 Grade F-19
WPT20	B 861/B 862 Grade 20	...	B 265 Grade 20	B 348 Grade 20	...	B 381 Grade F-20
WPT21	B 861/B 862 Grade 21	...	B 265 Grade 21	B 348 Grade 21	...	B 381 Grade F-21
WPT23	B 861/B 862 Grade 23	...	B 265 Grade 23	B 348 Grade 23	...	B 381 Grade F-23
WPT24	B 861/B 862 Grade 24	...	B 265 Grade 24	B 348 Grade 24	...	B 381 Grade F-24
WPT25	B 861/B 862 Grade 25	...	B 265 Grade 25	B 348 Grade 25	...	B 381 Grade F-25
WPT26	B 861/B 862 Grade 26	B338 Grade 26	B 265 Grade 26	B 348 Grade 26	...	B 381 Grade F-26
WPT27	B 861/B 862 Grade 27	B338 Grade 27	B 265 Grade 27	B 348 Grade 27	...	B 381 Grade F-27
WPT33	B 861/B 862 Grade 33	B338 Grade 33	B 265 Grade 33	B 348 Grade 33	...	B 381 Grade F-33
WPT34	B 861/B 862 Grade 34	B338 Grade 34	B 265 Grade 34	B 348 Grade 34	...	B 381 Grade F-34

[A] When fittings are of welded construction, the symbol shown shall be supplemented by the letter "W."

5. Manufacture

5.1 Forging, forming, or shaping operations may be performed by hammering, pressing, piercing, extruding, upsetting, rolling, bending, fusion welding, or by a combination of two or more of these operations. The forming procedure shall be so applied that it will not produce injurious defects in the fittings.

5.2 Fittings containing welded seams or other joints made by fusion welding shall comply with the following provision:

5.2.1 Welded by welders, welding operators, and welding procedures qualified under the provisions of Section IX of the ASME Boiler and Pressure Vessel Code.

NOTE 1 — Annealing of the unalloyed and alloyed grades of titanium covered by this specification is for the purpose of assuring uniform properties.

6. Chemical Composition

6.1 The titanium shall conform to the requirements as to chemical composition prescribed in the specifications referred to in Table 1.

6.2 The chemical analysis of the components of the fittings need not be reported unless required by agreement between the manufacturer and the purchaser and so specified on the order.

7. Product Analysis

7.1 Product analysis may be made by the purchaser from one or more fittings in each lot.

NOTE 2 — Definition of the term "lot" shall be as agreed upon between the manufacturer and the purchaser.

7.2 Product analysis tolerances do not broaden the specified heat analysis requirements, but cover variations between different laboratories in the measurement of chemical content. The manufacturer shall not ship material that is outside the limits specified for the applicable grade. Product analysis tolerances shall be as specified in Table 2.

8. Tensile Properties

8.1 The titanium shall conform to the requirements as to tensile properties prescribed in the specifications referred to in Table 1.

8.2 Tensile tests of the finished fittings need not be reported unless required by agreement between the manufacturer and the purchaser and so stated in the order.

TABLE 2
PERMISSIBLE VARIATIONS IN PRODUCT ANALYSIS

Element	Product Analysis Limits, max or Range, %	Permissible Variation in Product Analysis
Nitrogen	0.05	+0.02
Carbon	0.10	+0.02
Hydrogen	0.02	+0.002
Iron	0.50	+0.15
Oxygen	0.30	+0.03
Oxygen	0.31 to 0.40	±0.04
Aluminum	2.5 to 6.75	±0.40
Vanadium	2.0 to 4.5	±0.15
Vanadium	7.5 to 8.5	±0.40
Palladium	0.01 to 0.02	±0.002
Palladium	0.04 to 0.08	±0.005
Palladium	0.12 to 0.25	±0.02
Ruthenium	0.02 to 0.04	±0.005
Ruthenium	0.04 to 0.06	±0.005
Ruthenium	0.08 to 0.14	±0.01
Zirconium	3.5 to 4.5	±0.20
Chromium	0.1 to 0.2	±0.02
Chromium	5.5 to 6.5	±0.30
Niobium	2.2 to 3.2	±0.15
Molybdenum	0.2 to 0.4	±0.03
Molybdenum	3.5 to 4.5	±0.20
Molybdenum	14.0 to 16.0	±0.50
Nickel	0.3 to 0.9	±0.05
Silicon	0.15 to 0.25	±0.02
Residuals[A] (each)	0.15	±0.02

[A] A residual is an element present in a metal or alloy in small quantities and is inherent to the manufacturing process but not added intentionally. In titanium these elements include aluminum, vanadium, tin, iron, chromium, molybdenum, niobium, zirconium, hafnium, bismuth, ruthenium, palladium, yttrium, copper, silicon, cobalt, tantalum, nickel, boron, manganese, and tungsten.

9. Workmanship, Finish, and Appearance

9.1 For fittings covered by ANSI B16.9 or SP-43, or for fittings to be used with pipe ordered to ANSI B36.19, the sizes, shapes, and dimensions of the fittings shall be as specified in those standards.

9.2 The fittings shall have a workmanlike finish and shall be free of injurious external and internal imperfections of a nature that will interfere with the purpose for which the fittings are intended. Minor defects may be removed by grinding, providing the wall thickness is not decreased to less than the minimum thickness, and further provided that the ground-out area shall be faired out.

10. Hydrostatic Tests

10.1 All fittings shall be capable of withstanding without failure, leakage, or impairment of their serviceability, a test pressure prescribed in the specifications for the pipe or tubing with which the fitting is recommended to be used (see Table 1).

10.2 Hydrostatic tests need not be performed or reported, unless required by agreement between the manufacturer and the purchaser and so stated on the order.

11. Inspection and Certification

11.1 Inspection by the purchaser prior to shipment shall be specified in the purchase order.

11.2 The manufacturer shall afford the inspector, without charge, all reasonable facilities to satisfy him that the fittings are being furnished in accordance with this specification. Any tests (except product analysis) and inspection agreed upon and so stated in the purchase order shall be made at the place of manufacture, unless otherwise specified, and shall be so conducted as not to interfere unnecessarily with the operation of the works.

11.3 *Certification* — The manufacturer shall furnish the purchaser a certificate that the finished fittings conform to the requirements of this specification.

NOTE 3 — It is recognized that a sensitive surface inspection of the welds or base metal, or both, is advisable for some services. See Supplementary Requirements.

12. Rejection

12.1 Material not conforming to this specification or to authorized modifications shall be subject to rejection. Unless otherwise specified, rejected material may be returned to the manufacturer at the manufacturer's expense, unless the purchaser receives, within 3 weeks of notice of rejection, other instructions for disposition.

13. Product Marking

13.1 The manufacturer's name or trademark, the schedule number, material, and size shall be stamped (Note 4), stenciled, electroetched, or otherwise suitably marked on each fitting. In addition, each fitting shall be marked with the identification symbol and suffix for the respective specification listed in Table 1. On wall thicknesses thinner than Schedule 40S, no stamps or other indented markings shall be used. When the size does not permit complete marking, identification marks may be omitted in the sequence shown in SP-25.

NOTE 4 — When steel stamps are used, they should be applied prior to heat treatment and care should be taken so that the marking is not deep enough to cause cracks or to reduce the wall thickness of the fitting below the minimum allowed.

14. Keywords

14.1 fittings; seamless fittings; titanium; titanium alloy; welded fittings

SUPPLEMENTARY REQUIREMENTS

Supplementary requirements shall not be considered unless specified in the order, in which event the test shall be made by the manufacturer at the purchaser's expense.

S1. Surface Inspection

S1.1 Liquid penetrant inspection may be performed on all outside-diameter surfaces of the fittings and inside-diameter surfaces where practicable. An acceptance standard may be agreed upon between the manufacturer and the purchaser prior to the acceptance of the order.

S2. Radiographic Inspections of Welds

S2.1 Radiographic inspection may be performed on all weldments of the fittings in accordance with paragraph UW-51, Section VIII of the ASME Boiler and Pressure Vessel Code.

S3. Stress Relief Heat Treatment

S3.1 The stress-relieving treatment shall consist of holding the fitting at a minimum temperature of 1100°F for not less than $\frac{1}{2}$ h/in. of thickness.

S3.2 Minimum time at temperature is 15 min. All parts stress relieved shall be subsequently cleaned and free of oxide scale contamination (see Recommended Practice B 600).

S4. Certification of Material Incorporated in the Manufacture of the Fittings

S4.1 All material incorporated within the fitting shall be documented and shall be in accordance with the applicable documents in Table 1.

SPECIFICATION FOR FACTORY-MADE WROUGHT NICKEL AND NICKEL ALLOY FITTINGS

SB-366

(Identical with ASTM Specification B 366-97a except that certification has been made mandatory.)

1. Scope

1.1 This specification covers wrought welding fittings for pressure piping, factory-made from nickel and nickel alloys. Threaded fittings as covered in ASME B16.11 are also covered by this specification. The term welding applies to butt-welding or socket-welding parts such as 45 and 90 deg. elbows, 180 deg. bends, caps, tees, reducers, lap-joint stub ends, and other types, as covered by ANSI B16.9, ANSI B16.11, ANSI B16.28, and MSS SP-43.

1.1.1 Class WP fittings are those manufactured to the requirements of ANSI B16.9, B16.11, or B16.28.

1.1.2 Class CR fittings are those manufactured to the requirements of MSS SP-43.

1.2 This specification does not apply to cast welding fittings.

1.3 Optional supplementary requirements are provided for fittings where a greater degree of examination is desired. These supplementary requirements call for additional tests. When desired, one or more of these may be specified in the order.

1.4 The values stated in inch-pound units are to be regarded as the standard. The values given in parentheses are for information only.

2. Referenced Documents

2.1 *ASTM Standards:*

B 127 Specification for Nickel-Copper Alloy (UNS N04400) Plate, Sheet, and Strip
B 160 Specification for Nickel Rod and Bar
B 161 Specification for Nickel Seamless Pipe and Tube
B 162 Specification for Nickel Plate, Sheet, and Strip
B 164 Specification for Nickel-Copper Alloy Rod, Bar, and Wire
B 165 Specification for Nickel-Copper Alloy (UNS N04400) Seamless Pipe and Tube
B 166 Specification for Nickel-Chromium-Iron Alloys (UNS N06600, N06601, N06690, N06025, and N06045) and Nickel-Chromium-Cobalt-Molybdenum Alloy (UNS N06617) Rod, Bar, and Wire
B 167 Specification for Nickel-Chromium-Iron Alloy (UNS N06600, N06601, and N06690) Seamless Pipe and Tube
B 168 Specification for Nickel-Chromium-Iron Alloys (UNS N06600, N06601, N06690, N06025, and N06045) and Nickel-Chromium-Cobalt-Molybdenum Alloy (UNS N06617) Plate, Sheet, and Strip
B 333 Specification for Nickel-Molybdenum Alloy Plate, Sheet, and Strip
B 335 Specification for Nickel-Molybdenum Alloy Rod
B 407 Specification for Nickel-Iron-Chromium Alloy Seamless Pipe and Tube
B 408 Specification for Nickel-Iron-Chromium Alloy Rod and Bar
B 409 Specification for Nickel-Iron-Chromium Alloy Plate, Sheet, and Strip
B 423 Specification for Nickel-Iron-Chromium-Molybdenum-Copper Alloy (UNS N08825 and N08221) Seamless Pipe and Tube
B 424 Specification for Ni-Fe-Cr-Mo-Cu Alloy (UNS N08825 and UNS N08221) Plate, Sheet, and Strip
B 425 Specification for Ni-Fe-Cr-Mo-Cu Alloy (UNS N08825 and N08221) Rod and Bar
B 434 Specification for Nickel-Molybdenum-Chromium-Iron Alloy (UNS N10003) Plate, Sheet, and Strip
B 435 Specification for UNS N06002, UNS N06230, and UNS R30556 Plate, Sheet, and Strip

B 443 Specification for Nickel-Chromium-Molybdenum-Columbium Alloy (UNS N06625) Plate, Sheet, and Strip
B 444 Specification for Nickel-Chromium-Molybdenum-Columbium Alloy (UNS N06625) Pipe and Tube
B 446 Specification for Nickel-Chromium-Molybdenum-Columbium Alloy (UNS N06625) Rod and Bar
B 463 Specification for UNS N08020, UNS N08026, and UNS N08024 Alloy Plate, Sheet, and Strip
B 464 Specification for Welded UNS N08020, UNS N08024, and UNS N08026 Alloy Pipe
B 468 Specification for Welded UNS N08020, UNS N08024, and UNS N08026 Alloy Tubes
B 472 Specification for UNS N08020, UNS N08026, UNS N08024, UNS N08926, UNS N08367, and UNS R20033 Nickel Alloy Billets and Bars for Reforging
B 473 Specification for UNS N08020, UNS N08026, and UNS N08024 Nickel Alloy Bar and Wire
B 511 Specification for Nickel-Iron-Chromium-Silicon Alloy Bars and Shapes
B 512 Specification for Nickel-Chromium-Silicon Alloy (UNS N08330) Billets and Bars
B 514 Specification for Welded Nickel-Iron-Chromium Alloy Pipe
B 515 Specification for Welded UNS N08800, UNS N08810, and UNS N08811 Alloy Tubes
B 516 Specification for Welded Nickel-Chromium-Iron Alloy (UNS N06600), UNS N06025, and UNS N06045 Tubes
B 517 Specification for Welded Nickel-Chromium-Iron Alloy (UNS N06600) UNS N06025, and UNS N06045 Pipe
B 535 Specification for Nickel-Iron-Chromium-Silicon Alloys (UNS N08330 and UNS N08332) Seamless Pipe
B 536 Specification for Nickel-Iron-Chromium-Silicon Alloys (UNS N08330 and UNS N08332) Plate, Sheet and Strip
B 564 Specification for Nickel Alloy Forgings
B 572 Specification for UNS N06002, UNS N06230, and UNS R30556 Rod
B 573 Specification for Nickel-Molybdenum-Chromium-Iron Alloy (UNS N10003) Rod
B 574 Specification for Low-Carbon Nickel-Molybdenum-Chromium, Low-Carbon Nickel-Chromium-Molybdenum, and Low-Carbon Nickel-Chromium-Molybdenum-Tungsten Alloy Rod
B 575 Specification for Low-Carbon Nickel-Molybdenum-Chromium, Low-Carbon Nickel-Chromium-Molybdenum, and Low-Carbon Nickel-Chromium-Molybdenum-Tungsten Alloy Plate, Sheet, and Strip
B 581 Specification for Nickel-Chromium-Iron-Molybdenum-Copper Alloy Rod
B 582 Specification for Nickel-Chromium-Iron-Molybdenum-Copper Alloy Plate, Sheet, and Strip
B 619 Specification for Welded Nickel and Nickel-Cobalt Alloy Pipe
B 622 Specification for Seamless Nickel and Nickel-Cobalt Alloy Pipe and Tube
B 625 Specification for UNS N08904, UNS N08925, UNS N08031, UNS N08932, UNS N08926, and UNS R20033 Plate, Sheet, and Strip
B 626 Specification for Welded Nickel and Nickel-Cobalt Alloy Tube
B 649 Specification for Ni-Fe-Cr-Mo-Cu Low-Carbon Alloy (UNS N08904) and Ni-Fe-Cr-Mo-Cu-N Low-Carbon Alloys (UNS N08925, UNS N08031, and UNS N08926), and Cr-Ni-Fe-N Low Carbon Alloy (UNS R20033) Bar and Wire
B 673 Specification for UNS N08904, UNS N08925, and UNS N08926 Welded Pipe
B 674 Specification for UNS N08904, UNS N08925, and UNS N08926 Welded Tube
B 675 Specification for UNS N08366 and UNS N08367 Welded Pipe
B 676 Specification for UNS N08366 and UNS N08367 Welded Tube
B 677 Specification for UNS N08904, UNS N08925, and UNS N08926 Seamless Pipe and Tube
B 688 Specification for Chromium-Nickel-Molybdenum-Iron (UNS N08366 and UNS N08367) Plate, Sheet, and Strip
B 690 Specification for Iron-Nickel-Chromium-Molybdenum Alloys (UNS N08366 and UNS N08367) Seamless Pipe and Tube
B 691 Specification for Iron-Nickel-Chromium-Molybdenum Alloys (UNS N08366 and UNS N08367) Rod, Bar, and Wire
B 704 Specification for Welded (UNS N06625 and UNS N08825) Alloy Tubes
B 705 Specification for Nickel-Alloy (UNS N06625 and UNS N08825) Welded Pipe
B 710 Specification for Nickel-Iron-Chromium-Silicon Alloy Welded Pipe
E 165 Test Method for Liquid Penetrant Examination

2.2 *ANSI Standards:*

B16.9 Wrought Steel Butt Welding Fittings
B16.11 Forged Steel Fittings, Socket-Welding and Threaded
B16.28 Wrought Steel Butt Welding Short Radius Elbows and Returns
H34.1 Nickel Seamless Pipe and Tubing
H34.2 Nickel-Copper Alloy Seamless Pipe and Tubing
H34.3 Nickel-Chromium-Iron Alloy Seamless Pipe and Tubing

2.3 *Manufacturers Standardization Society of the Valve and Fittings Industry Standards:*

MSS SP-25 Standard Marking Systems for Valves, Fittings, Flanges, and Unions

MSS SP-43 Standard Practice for Light Weight Stainless Steel Butt Welding Fittings

2.4 *ASME Standards:*

Boiler and Pressure Vessel Code, Section VIII, Division 1, Pressure Vessels and Section IX, Welding Qualifications

2.5 *AWS Standards:*

A5.11 Specification for Nickel and Nickel Alloy Covered Welding Electrodes

A5.14 Specification for Nickel and Nickel-Alloy Bare Welding Rods and Electrodes

3. Ordering Information

3.1 Orders for fittings under this specification shall include the following information:

3.1.1 quantity, number of fittings of each kind;

3.1.2 description of Fitting and Nominal Dimensions (standard or special);

3.1.3 alloy composition;

3.1.4 Class **WP***S, WP***W, WP***WX,** or **CR***** shall be specified.

3.1.4.1 Class **CR** fittings shall not be substituted for fittings ordered to Class **WP**, but Class **WP** may be substituted for Class **CR**.

3.1.4.2 Unless Class **WP***S, WP***W,** or **WP***WX** is specified by the purchaser, any may be furnished at the option of the supplier.

3.1.5 heat treatment (4.3 and Appendix X1);

3.1.6 purchaser inspection — State which tests or inspections are to be witnessed (Section 9);

3.1.7 samples for product (check) analysis — State whether samples shall be furnished (5.3);

3.1.8 mill test reports (Section 11); and

3.1.9 supplementary requirements, if any.

4. Materials and Manufacture

4.1 *Material* — The material for wrought welding fittings may consist of forgings, rods, bars, plates, sheets, and seamless or welded pipe that conform to all the requirements of the ASTM specifications for the particular product and alloy referred to in Table 1.

4.2 *Manufacture:*

4.2.1 Forging or shaping operations may be performed by hammering, pressing, piercing, extruding, upsetting, rolling, bending, or fusion welding, or by a combination of two or more of these operations. The forming procedure shall be so applied that it will not produce injurious defects in the fittings.

4.2.2 Fittings ordered as Class **WP***S** shall be of seamless construction and shall meet all requirements of ANSI B16.9, B16.11, or B16.28.

4.2.3 All classes of fittings shall have the welders, welding operators, and welding procedures qualified under the provisions of Section IX of the ASME Boiler and Pressure Vessel Code.

4.2.4 Fittings ordered as Class **WP***W** shall meet the requirements of ANSI B16.9 or B16.28 and shall have all welds made by the fitting manufacturer radiographically examined throughout the entire length in accordance with Paragraph UW-51 of Section VIII, Division 1 of the ASME Boiler and Pressure Vessel Code, except as exempt by 4.2.4.1 and 4.2.4.2.

4.2.4.1 The weld in the starting pipe, made to one of the pipe or tube product specifications listed in Table 1, shall not require radiography, provided that no filler metal is used in making the weld.

4.2.4.2 Instead of the radiographic examination, and at the option of the manufacturer, welds made by the fitting manufacturer may be ultrasonically examined in accordance with Appendix XII of Section VIII, Division 1 of the ASME Boiler and Pressure Vessel Code.

4.2.5 Fittings ordered as Class **WP***WX** shall meet the requirements of ANSI B16.9 or B16.28 and shall have all welds, whether made by the fitting manufacturer or the starting material manufacturer, radiographically examined throughout their entire length in accordance with Paragraph UW-51 of Section VIII, Division 1 of the ASME Boiler and Pressure Vessel Code, except as exempt by 4.2.5.1. The radiography of this class of fittings may be done either prior to or after forming at the option of the manufacturer.

4.2.5.1 Instead of the radiographic examination, and at the option of the manufacturer, welds made by the fitting manufacturer may be ultrasonically examined in accordance with Appendix XII of Section VIII, Division 1 of the ASME Boiler and Pressure Vessel Code.

4.2.6 Fittings covered in MSS SP-43 and ordered as **CR***** shall meet the requirements of MSS SP-43 and do not require radiography.

4.2.7 All joints welded with filler metal shall be finished in accordance with the requirements of Paragraph

TABLE 1
PERMISSIBLE RAW MATERIALS

Marking[A]			Product and ASTM Designation[B]			
Corrosion-Resistant Fittings	ANSI Pressure Fittings	Alloy	UNS Designation	Pipe or Tube	Plate, Sheet, or Strip	Bar Forging and Forging Stock
CRN	WPN	Ni	N02200	B 161	B 162	B 160, B 564
CRNL	WPNL	Ni, low C	N02201	B 161	B 162	B 160
CRNC[C]	WPNC[C]	Ni-Cu	N04400	B 165	B 127	B 164, B 564
CR HX	WPHX	Ni-Cr-Mo-Fe	N06002	B 619, B 622, B 626	B 435	B 572
CR HG	WPHG	Ni-Cr-Fe-Mo-Cu	N06007	B 619, B 622, B 626	B 582	B 581
CR HC 22	WPHC22	Low C-Ni-Mo-Cr	N06022	B 619, B 622, B 626	B 575	B 574, B 564
CRV602	WPV602	Ni-Cr-Fe	N06025	B 163, B 167	B 168	B 166
CR HG 30	WPHG30	Ni-Cr-Fe-Mo-Cu	N06030	B 619, B 622, B 626	B 582	B 581
CRV45TM	WPV45TM	Ni-Cr-Fe	N06045	B 163, B 167	B 168	B 166
CR5923	WP5923	Low C-Ni-Cr-Mo	N06059	B 619, B 622, B 626	B 575	B 564, B 574
CR HC 2000	WPHC2000	Low C-Ni-Cr-Mo-Cu	N06200	B 619, B 622, B 626	B 575	B 574, B 564
CRH230	WPH230	Ni-Cr-W-Mo	N06230	B 619, B 622, B 626	B 435	B 572, B 564
CR HC 4	WPHC4	Low C-Ni-Mo-Cr	N06455	B 619, B 622, B 626	B 575	B 574
CRNCI	WPNCI	Ni-Cr-Fe	N06600	B 167, B 516, B 517	B 168	B 166, B 564
CR603GT	WP603GT	Ni-Cr-Fe-Al	N06603	B 163, B 167, B 516, B 517	B 168	B 166, B 564
CRNCMC	WPNCMC	Ni-Cr-Mo-Cb	N06625	B 444, B 704, B 705	B 443	B 446, B 564
CR HG3	WPHG3	Ni-Cr-Fe-Mo-Cu	N06985	B 619, B 622, B 626	B 582	B 581
CR20CB	WP20CB	Cr-Ni-Fe-Mo-Cu-Cb stabilized	N08020	B 464, B 468, B 729	B 463	B 472, B 473, B 462
CR904L	WP904L	Ni-Fe-Cr-Mo-Cu low C	N08904	B 673, B 674, B 677	B 625	B 649
CR3127	WP3127	Ni-Fe-Cr-Mo-Cu-Low Carbon	N08031	B 619, B 622, B 626	B 625	B 564, B 649
CRH120	WPH120	Ni-Cr-Fe	N08120	B 407, B 514, B 515	B 409	B 408, B 564
CR330	WP330	Ni-Fe-Cr-Si	N08330	B 535, B 710	B 536	B 511, B 512
CR6XN	WP6XN	Fe-Ni-Cr-Mo-N	N08367	B 675, B 676, B 690	B 688	B 472, B 564, B 691, B 462
CRNIC	WPNIC	Ni-Fe-Cr	N08800	B 407, B 514, B 515	B 409	B 408, B 564
CRNIC10	WPNIC10	Ni-Fe-Cr	N08810	B 407, B 514, B 515	B 409	B 408, B 564
CRNIC11	WPNIC11	Ni-Fe-Cr	N08811	B 407	B 409	B 408, B 564
CRNICMC	WPNICMC	Ni-Fe-Cr-Mo-Cu	N08825	B 423, B 704, B 705	B 424	B 425, B 564
CR1925	WP1925	Ni-Fe-Cr-Mo-Cu low C	N08925	B 673, B 674, B 677	B 625	B 649
CR1925N	WP1925N	Ni-Fe-Cr-Mo-Cu-N low C	N08926	B 673, B 674, B 677	B 625	B 649
CR HB	WPHB	Ni-Mo	N10001	B 619, B 622, B 626	B 333	B 335
CR HN	WPHN	Ni-Mo-Cr-Fe	N10003		B 434	B 573
CR HC 276	WPHC276	Low C-Ni-Mo-Cr	N10276	B 619, B 622, B 626	B 575	B 574, B 564
CRVB4	WPVB4	Ni-Mo	N10629	B 619, B 622, B 626	B 333	B 335
CR HB2	WPHB-2	Ni-Mo	N10665	B 619, B 622, B 626	B 333	B 335
CR HB3	WPHB-3	Ni-Mo	N10675	B 619, B 622, B 626	B 333	B 335, B 564
CRH160	WPH160	Ni-Co-Cr-Si	N12160	B 619, B 622, B 626	B 435	B 572, B 564
CR3033	WP3033	Cr-Ni-Fe-N Low Carbon	R20033	B 619, B 622, B 626	B 625	B 564, B 649, B 472
CRH556	WPH556	Ni-Fe-Cr-Co	R30556	B 619, B 622, B 626	B 435	B 572

[A] When WP fittings are of welded construction or made from welded pipe, the symbol shall be supplemented with W or WX as applicable. If ultrasonic examination in accordance with 4.2.4.2 or 4.2.5.1 is used, the symbol shall be supplemented by WU or WXU as applicable.

[B] See 2.1 and 4.1.

[C] Yield strength shall be 25,000 psi (172 MPa) min, for all hot-formed, annealed fittings made from WPNC material.

UW-35(a) of Section VIII, Division 1 of the ASME Boiler and Pressure Vessel Code.

4.2.8 Radiographic examination of the weld buildup on cold-formed stub ends shall not be required provided that all the following steps are adhered to:

4.2.8.1 The weld procedure and welders or welding operators meet the requirements of 4.2.3.

4.2.8.2 All weld surfaces are liquid penetrant examined in accordance with Appendix 8 of Section VIII, Division 1 of the ASME Boiler and Pressure Vessel Code.

4.2.8.3 Repairs of areas in the weld is permitted, but 4.2.8.1 and 4.2.8.2 must be repeated.

4.2.8.4 Fittings shall be marked with the symbol WBU following the alloy designation (for example: WPN-WBU).

4.3 *Heat Treatment* — Heat treatment, if required, shall be as agreed upon between the manufacturer and the purchaser.

5. Chemical Composition

5.1 The material shall conform to the requirements as to chemical composition for the respective material prescribed in Table 1.

5.2 Records of chemical analysis made in accordance with the applicable specification listed in Table 1 shall be certification that the material of the fitting meets the requirements of this specification.

5.3 If a product (check) analysis is made by the purchaser, the material shall conform to the requirements for product (check) analysis prescribed for the respective product in Table 1.

5.4 In fittings of welded construction, the alloy content of the deposited weld metal shall conform to that required of the base metal or for equivalent weld metal as given in the AWS Filler Metal Specification A5.11 and A5.14.

6. Mechanical Properties and Other Requirements

6.1 *Tensile Requirements:*

6.1.1 Material used in the manufacture of the fittings shall conform to the requirements for tensile properties as prescribed for the respective product in Table 1.

6.1.2 Finished fittings shall conform to the properties for the respective material and temper as prescribed in the specifications referred to in Table 1. When required, the properties of fittings made from forging stock shall be as agreed upon between the producer and the purchaser.

6.1.3 Tension tests of the finished fittings are not required, unless otherwise agreed upon between the manufacturer and the purchaser.

6.2 *Hydrostatic Tests:*

6.2.1 Hydrostatic testing of wrought fittings is not required by this specification.

6.2.2 All fittings shall be capable of withstanding without failure, leakage, or impairment of their serviceability, a test pressure prescribed in the specifications for the pipe with which the fitting is recommended to be used.

7. Dimensions

7.1 Fittings or components produced in accordance with this specification shall have sizes, shapes, and dimensions in accordance with those specified in ASME B16.9, ASME B16.11, ASME B16.28, MSS SP-43, ASME H34.1, ASME H34.2, or ASME H34.3.

8. Workmanship, Finish, and Appearance

8.1 The fittings shall be free of injurious defects and have a workmanlike finish. Minor defects may be removed by grinding, provided the wall thickness is not decreased to less than the allowable specification minimum and provided the grinding is smooth and leaves no shoulders.

8.2 The fittings shall be cleaned free of scale.

9. Inspection

9.1 Inspection of the material by the purchaser at the place of manufacture shall be made as agreed upon between the purchaser and the manufacturer as part of the purchase contract.

10. Rejection and Rehearing

10.1 Material that fails to conform to the requirements of this specification may be rejected. Rejection should be reported to the producer or supplier promptly and in writing. In case of dissatisfaction with the results of the test, the producer or supplier may make claim for a rehearing.

11. Certification

11.1 The manufacturer shall report to the purchaser or his representative the results of the chemical analysis made in accordance with Section 5, the results of the tension tests specified in Section 6, or the use of ultrasonic

examination in accordance with 4.2.4.2 or 4.2.5.1, or a combination thereof.

12. Product Marking

12.1 The manufacturer's name or trademark, material, the size and schedule number, the designation as shown in Table 1, under "Marking," either column 1 for class CR fittings or column 2 for class WP fittings, shall be stamped, stenciled, or otherwise permanently marked on each fitting. Class WP fitting marking also must include the suffix in accordance with 4.2. On wall thicknesses thinner than 0.083 in., no steel stamps or other indented markings shall be used. When the size does not permit complete marking, identification marks may be omitted in the sequence shown in MSS SP-25.

NOTE — When steel stamps are used, the marking shall not be deep enough to cause cracks or to reduce the wall thickness of the fittings below the minimum allowed by the applicable specification.

13. Keywords

13.1 nickel alloy fittings

SUPPLEMENTARY REQUIREMENTS

These requirements shall not be considered unless specified in the order, in which event the supplementary requirements specified shall be made at the place of manufacture, unless otherwise agreed upon.

S1. Product Analysis (Note S2.1)

S1.1 A product analysis shall be made from each heat of base metal, and, if of welded construction, from each lot (Note S2.3) number of welding material of the fittings offered for delivery. The analysis shall conform to the requirements specified in Section 5.

S2. Tension Test (Note S2.1)

S2.1 One tension test shall be made on one fitting or representative test piece (Note S2.1) per lot (Note S2.3) of fittings. If the fittings are of welded construction, the tension specimen shall include the weld and be prepared so that the weld is at the midlength location of the specimen. However, in no case shall the tensile properties of the finished fittings be less than the requirements of the pipe specifications listed in Table 1, except that weld specimens are exempt from the tensile ductility requirements.

NOTE S2.1 — If the results of any of the tests specified in Section S1 or S2 do not conform to requirements, retests may be made at the manufacturer's expense on additional fittings or representative test pieces of double the original number from the same heat or lot as defined in Section S1 or S2. If either of the additional test pieces fails, the lot shall be rejected.

NOTE S2.2 — *Representative Test Piece:* Where the test specimen for the tension test cannot be taken from a fitting due to size limitations, a representative test shall be obtained. The test piece shall be from the same heat and heat treated in the same batch or charge as the fittings it represents, and shall have approximately the same amount of working. In addition, test pieces representing fittings manufactured from bars, plate, or forgings shall have a cross section equal to the greatest cross section of the fitting, and test pieces representing fittings manufactured from pipe shall have an outside diameter and wall thickness equal to those of the fitting. The test piece for fittings of welded construction shall be prepared to the same weld procedures and from the same heats of material as the fittings it represents.

NOTE S2.3 — A lot shall consist of all fittings of the same type, size, and wall thickness, manufactured from one heat of material, and if welding is performed, using the same size and AWS classification welding product.

S3. Liquid Penetrant Test

S3.1 All surfaces shall be liquid penetrant tested. The method shall be in accordance with Practice E 165. Acceptance limits shall be as specified by the purchaser.

S4. Hydrostatic Test

S4.1 A hydrostatic test shall be applied as agreed upon between the manufacturer and purchaser.

S5. Bar Stock Fittings

S5.1 Fittings machined from solid bar stock are not permitted.

APPENDIX

(Nonmandatory Information)

X1. HEAT TREATMENT

X1.1 Proper heat treatment during or subsequent to fabrication may be necessary for optimum performance, and the manufacturer shall be consulted for details. The final heat treatment should be consistent with the heat treatment requirements given in the respective pipe or tube specifications.

SPECIFICATION FOR TITANIUM AND TITANIUM ALLOY CASTINGS

SB-367

(Identical with ASTM Specification B 367-93.)

1. Scope

1.1 This specification covers titanium and titanium alloy castings intended for general corrosion resistant and industrial applications.

1.2 This specification is intended for use of purchasers and/or producers of reactive metal castings for defining the requirements and assuring the properties of castings for unique corrosion-resistant applications, that is, not for commodity items which must meet all potential purchasers' requirements.

1.2.1 Users are advised to use the specification as a basis for obtaining castings which will meet minimum acceptance requirements established and revised by consensus of the members of the committee.

1.2.2 User requirements considered more stringent may be met by the addition to the purchase order of one or more supplementary requirements, which may include, but are not limited to, those listed in Sections S1 through S8.

1.3 The values stated in inch-pound units are to be regarded as the standard. The values given in parentheses are for information only.

2. Referenced Documents

2.1 *ASTM Standards:*

A 802/A 802M Practice for Steel Castings, Surface Acceptance Standards, Visual Examination

E 8 Test Methods of Tension Testing of Metallic Materials

E 10 Test Method for Brinell Hardness of Metallic Materials

E 18 Test Methods for Rockwell Hardness and Rockwell Superficial Hardness of Metallic Materials

E 29 Practice for Using Significant Digits in Test Data to Determine Conformance with Specifications

E 94 Guide for Radiographic Testing

E 120 Test Methods for Chemical Analysis of Titanium and Titanium Alloys

E 142 Test Method for Controlling Quality of Radiographic Testing

E 165 Practice for Liquid Penetrant Inspection Method

E 446 Reference Radiographs for Steel Castings Up to 2 in. (51 mm) in Thickness

E 1409 Test Method for Determination of Oxygen in Titanium and Titanium Alloys by the Inert Gas Fusion Technique

E 1447 Test Method for Determination of Hydrogen in Titanium and Titanium Alloys by the Gas Fusion Thermal Conductivity Method

3. Terminology

3.1 *Descriptions of Terms Specific to This Standard:*

3.1.1 *lot* — shall consist of all castings of the same design produced from the same pour.

3.1.2 *pour* — shall consist of all material melted and cast at one time.

4. Ordering Information

4.1 Orders for castings to this specification shall include the following as required, to describe the requirements adequately:

4.1.1 Description of the castings by pattern number or drawing. Dimensional tolerances shall be included on the casting drawing,

4.1.2 Quantity,

4.1.3 Grade designation (see Table 1),

TABLE 1
CHEMICAL REQUIREMENTS

Element	Composition, Weight %								
	Grade C-2	Grade C-3	Grade C-5	Grade C-6	Grade Ti-Pd7B	Grade Ti-Pd8A	Grade Ti-Pd16	Grade Ti-Pd17	Grade Ti-Pd18
Nitrogen, max	0.05	0.05	0.05	0.05	0.05	0.05	0.03	0.03	0.05
Carbon, max	0.10	0.10	0.10	0.10	0.10	0.10	0.10	0.10	0.10
Hydrogen, max	0.015	0.015	0.015	0.015	0.015	0.015	0.0150	0.0150	0.0150
Iron, max	0.20	0.25	0.40	0.50	0.20	0.25	0.30	0.20	0.25
Oxygen, max	0.40	0.40	0.25	0.20	0.40	0.40	0.18	0.25	0.15
Aluminum	...	...	5.5–6.75	4.00–6.00	...	...	...	...	2.5–3.5
Vanadium	...	...	3.5–4.5	...	...	...	...	...	2.0–3.0
Tin	...	...	...	2.0–3.0	...	...	...	...	...
Palladium	...	...	...	...	0.12 min	0.12 min	0.04–0.08[A]	0.04–0.08[A]	0.04–0.08[B]
Other elements (each), max[C]	0.10	0.10	0.10	0.10	0.10	0.10	0.10	0.10	0.10
Other elements (total), max[C]	0.40	0.40	0.40	0.40	0.40	0.40	0.40	0.40	0.40

[A] *Grade TiPd16 and TiPd17*—Unalloyed titanium with reduced palladium content to enhance corrosion properties are similar to Grade TiPd, 7B and 8A.

[B] *Grade 18*—Palladium added to titanium alloy 3AI-2.5V or enhance corrosion properties.

[C] Need not be reported. By agreement between producer and purchaser, analysis may be required and limits established for elements or compounds not specified in this table.

4.1.4 Options in the specification, and

4.1.5 Supplementary requirements desired, including the standards of acceptance.

5. Materials and Manufacture

5.1 Materials for this specification shall be melted by conventional processes used for reactive metals. Typical methods include the consumable electrode and induction-slag, plasma arc, induction-skull, and electron beam melting processes.

6. Chemical Composition

6.1 *Pour Analysis* — An analysis of each pour shall be made by the producer from a sample such as a casting or test bar that is representative of the pour. The chemical composition determined shall conform to the requirements specified for the relevant grade in Table 1.

6.1.1 The elements listed in Table 1 are intentional alloy additions or elements which are inherent to the manufacture of titanium sponge, ingot or mill product.

6.1.1.1 Elements other than those listed in Table 1 are deemed to be capable of occurring in the grades listed in Table 1 by and only by way of unregulated or unanalyzed scrap additions to the ingot melt. Therefore product analysis for elements not listed in Table 1 shall not be required unless specified and shall be considered to be in excess of the intent of this specification.

6.1.2 Elements intentionally added to the melt must be identified, analyzed, and reported in the chemical analysis.

6.2 When agreed upon by the producer and the purchaser and requested by the purchaser in his written purchase order, chemical analysis shall be completed for specific residual elements not listed in this specification.

6.3 *Product Analysis* — Product analysis tolerances do not broaden the specified heat analysis requirements, but cover variations between laboratories in the measurement of chemical content. The producer shall not ship material which is outside the limits specified in Table 1 for the applicable grade. Product analysis limits shall be as specified in Table 2.

6.4 *Sampling* — Samples for chemical analysis may be made by the purchaser on a representative casting from any lot. Due to the possibility of oxygen or other interstitial contamination, samples for oxygen, carbon, hydrogen, and nitrogen analysis shall be taken no closer than $\frac{1}{4}$ in. (6.3 mm) to a cast surface except that castings too thin for this shall be analyzed on representative material. The chemical composition determined shall conform to the analysis in Table 1 within the check analysis variations shown in Table 2 or shall be subject to rejection by the purchaser.

6.5 *Referee Analysis* — In the event of disagreement between the producer and purchaser concerning the analysis of any casting, Test Methods E 120 shall be used as a referee chemical analysis method.

TABLE 2
CHECK ANALYSIS TOLERANCES

Element	Maximum or Range, Weight %	Permissible Variation in Check Analysis
Nitrogen	0.05	+0.02
Carbon	0.10	+0.02
Hydrogen	0.015	+0.003
Iron	0.50	+0.15
	0.40	+0.08
	0.25	+0.05
	0.20	+0.04
Oxygen	0.40	+0.08
	0.25	+0.05
	0.20	+0.04
Aluminum	2.5–6.75	±0.40
Vanadium	2.0–4.5	±0.15
Tin	2.0–3.0	±0.15
Palladium	0.04–0.25	±0.02
Other (each)	0.10	+0.02

7. Heat Treatment

7.1 Unless otherwise specified in the contract, all castings will be supplied in the as-cast condition except when post-weld heat treatment is required.

7.2 If post-weld heat treatment is required, it shall consist of a stress relief performed at 1075 ± 25°F (580 ± 14°C) for Grades C-2, C-3 Ti-Pd7B, Ti-Pd8A, Ti-Pd16 and Ti-Pd17, and 1200 ± 25°F (650 ± 14°C) for Grades C-5, C-6, and Ti-Pd18. Time at temperature shall be a minimum of ½ h plus an additional ½ h at temperature per inch of thickness for section sizes greater than 1 in. (25 mm). After heat treatment, the castings should be cooled in air or in the furnace to ambient temperature unless otherwise agreed upon between the purchaser and producer.

8. Workmanship, Finish, and Appearance

8.1 All castings shall be made in a workman-like manner and shall conform to the dimensions in drawings furnished by the purchaser before manufacturing is started. If the pattern is supplied by the purchaser, the dimensions of the casting shall be as predicted by the pattern.

8.2 The surface of the casting shall be free of adhering mold material, scale, cracks, and hot tears as determined by visual examination. Other surface discontinuities shall meet the visual acceptance standards specified in the order. Practice A 802/A 802M or other visual standards may be used to define acceptable surface discontinuities and finish. Unacceptable surface discontinuities shall be removed and their removal verified by visual examination of the resultant cavities.

9. Repair by Welding

9.1 If repairs are required, these shall be made using a welding procedure and operators certified to quality requirements established by the producer. The procedures developed shall be consistent with standard practices recommended for reactive metal alloys. The producer shall maintain documentation on procedure and welder qualifications. Procedure modifications or special arrangements shall be as agreed upon between the producer and the purchaser.

9.2 The composition of the deposited weld metal shall be within the chemical requirements for each grade established in Table 1.

9.2.1 Unalloyed titanium Grades C-2 and C-3, and low-alloy Grades Ti-Pd7B, Ti-Pd8A, Ti-Pd16, and Ti-Pd17 castings shall be stress-relieved if the repair is considered capable of adding stresses that will interfere with the purpose for which the castings are intended. The decision for stress relieving shall be made by the producer, unless otherwise agreed upon. The stress-relief cycle shall be in accordance with 7.2 followed by air or furnace cooling to room temperature, or as agreed upon between the purchaser and the producer.

9.2.2 Grade C-5 (Ti-6A1-4V), Grade C-6 (Ti-5A1-2.5Sn) and Grade Ti-Pd 18 castings shall be stress-relieved after weld repair, if the weld defect or excavation is through a wall or exceeds 1 $in.^3$ (16 000 mm^3) of deposited metal. The stress-relief cycle shall be in accordance with 7.2.

9.2.3 Hot isostatic pressing (HIP) may be substituted for required thermal treatment provided all requirements for that treatment are met, and temperatures detrimental to the material properties are not reached.

10. Inspection

10.1 The producer shall afford the purchaser's inspector all reasonable facilities necessary to satisfy him that the material is being produced and furnished in accordance with this specification. Foundry inspection by the purchaser shall not interfere unnecessarily with the producer's operations.

10.2 If the results of any chemical or mechanical property test lot are not in conformance with the requirements of this specification, the lot may be retested at the option of the producer. The frequency of the retest will double the initial number of tests. If the results of the

retest conform to the specification, then the retest values will become the test values for certification. Only original conforming test results or the conforming retest results shall be reported to the purchaser. If the results for the retest fail to conform to the specification, the material will be rejected in accordance with Section 11.

10.3 For purposes of determining conformance with the specifications contained herein, an observed or a calculated value shall be rounded off to the nearest unit in the last right-hand significant digit used in expressing the limiting value. This is in accordance with the round-off method of Practice E 29.

11. Rejection

11.1 Any rejection based on test reports shall be reported to the producer within 60 days from the receipt of the test reports by the purchaser.

11.2 Material that shows unacceptable discontinuities as determined by the acceptance standards specified on the order, subsequent to acceptance at the producer's works, may be rejected, and the producer shall be notified within 60 days, or as otherwise agreed upon.

11.3 In the event of disagreement between the producer and the purchaser on the conformance of the material to the requirements of this specification, a mutually acceptable referee shall perform the tests in question. The referee's testing shall be used in determining the conformance of the material to this specification.

12. Product Marking

12.1 Unless otherwise specified, the following shall apply.

12.1.1 Castings shall be marked for material identification with the ASTM designation number (Specification B 367) and grade symbol, that is, C2, C3, C5, C6, Ti-Pd7B, Ti-Pd8A, Ti-Pd16, Ti-Pd17, or Ti-Pd18.

12.1.2 The producer's name or identification mark and the pattern number shall be cast or stamped using low stress stamps on all castings. Small size castings may be such that marking must be limited consistent with the available area.

12.1.3 The marking of lot numbers on individual castings shall be agreed upon by the producer and the purchaser.

12.1.4 Marking shall be in such a position as not to injure the usefulness of the casting.

13. Keywords

13.1 castings; corrosion resistant; titanium; titanium alloys

SUPPLEMENTARY REQUIREMENTS

Supplementary requirements shall be applied only when specified by the purchaser. Details of the supplementary requirements shall be agreed upon by the producer and purchaser. The specified tests shall be performed by the producer prior to shipment of the castings.

S1. Radiographic Examination

S1.1 When specified in the purchase order, castings shall be examined for internal discontinuities by means of X rays or gamma rays. Inspection procedure shall be in accordance with the Guide E 94 and Method E 142. Types and degrees of discontinuities considered shall be judged by the Reference Radiographs E 446. Extent of examination and the basis for acceptance shall be agreed upon by the producer and the purchaser. A specification that may be used as a basis for such agreement is described as follows:

S1.2 *Extent of Examination:*

S1.2.1 *Category I* — The castings shall be 100 % inspected radiographically and film sent or made available for purchaser examination.

S1.2.2 *Category II* — Critical areas of all castings shall be radiographically inspected to ensure that casting quality is sufficient to meet customer needs. The film record need not be maintained.

S1.2.3 *Category III* — Sample castings shall be radiographed in accordance with an agreed upon schedule. When discontinuities exceed the acceptance limits, all castings in the lot shall be examined according to Category II.

S1.3 *Basis for Acceptance:*

S1.3.1 The maximum severity level for each specific type of discontinuity shall be agreed upon by the purchaser and producer. A specification which may be used as a basis for such agreement, using Reference Radiographs E 446 is described as follows:

Category A	gas porosity	severity level 2
Category B	sand and slag inclusions	severity level 2
Category C	shrinkage CA	severity level 2
Category C	shrinkage CB	severity level 2
Category C	shrinkage CC	severity level 2
Category C	shrinkage CD	severity level 2
Category D	crack	none permitted
Category E	hot tear	none permitted
Category F	insert	none permitted

S2. Liquid Penetrant Examination

S2.1 The castings shall be examined for surface discontinuities by means of liquid penetrant examination. The examination shall be in accordance with Practice E 165. Areas to be inspected, methods and types of liquid penetrants to be used, developing procedure, and basis for acceptance shall be agreed upon between the producer and the purchaser.

S3. Examination of Weld Preparation

S3.1 Cavities prepared for welding due to surface discontinuities, such as cracks, open porosity, etc. shall be examined by means of liquid penetrant examination in order to verify removal of such discontinuities.

S3.2 Weld repairs that are made to eliminate discontinuities that are detected by radiography shall be re-radiographed to verify that unacceptable discontinuities have been removed.

S4. Certification

S4.1 A test report shall be furnished. The test report shall contain the results of the actual chemical analysis and other tests specified by the purchaser.

S4.2 Each test report shall be signed by an authorized agent of the seller or producer.

S4.3 The test report shall be furnished within 5 days of shipment of the castings.

S5. Hot Isostatic Pressing (HIP)

S5.1 Hot isostatic pressing (HIP) may be used to improve as-cast quality when required. Temperature, time at temperature, and atmosphere shall be as agreed upon between the producer and the purchaser.

S5.2 Castings for which HIP is not required may be hot isostatic pressed by the producer in accordance with the requirements of 7.2.

S5.3 HIP may be substituted for required thermal treatment provided all requirements for that treatment are met and temperatures detrimental to the material properties are not reached.

S6. Tension Test

S6.1 Tensile properties shall be determined on material representing each pour. Properties shall be determined in the as-cast condition unless otherwise specified in the purchase order. The results shall conform to the requirements specified in Table S6.1.

S6.2 Test bars may be obtained from special test blocks cast for that purpose or cut from castings processed with a lot.

S6.3 Tensile tests shall be made in accordance with the requirements of Test Methods E 8. Tensile properties shall be determined using a strain rate of 0.003 to 0.007 in./in./mm (0.003 to 0.007 mm/mm/min) through the yield strength.

S6.4 If any test specimen shows defective machining or develops flaws, it may be discarded and another specimen substituted from the same pour.

S7. Prior Approval of Major Weld Repairs

S7.1 Major weld repairs as defined and agreed upon between the producer and the purchaser shall be subject to the prior approval of the purchaser.

TABLE S6.1
TENSILE REQUIREMENTS

Grade	Tensile Strength, Min., ksi (MPa)	Yield Strength, 0.2% Offset, Min., ksi (MPa)	Elongation in 1 in. Gage Length, min., %
C-2	50 (345)	40 (275)	15
C-3	65 (450)	55 (380)	12
C-5	130 (895)	120 (825)	6
C-6	115 (795)	105 (795)	8
Ti-Pd 7B	50 (345)	40 (275)	15
Ti-Pd 8A	65 (450)	55 (380)	12
Ti-Pd16	50 (345)	40 (275)	15
Ti-Pd17	35 (240)	25 (170)	20
Ti-Pd18	90 (620)	70 (483)	15

S8. Hardness Test

S8.1 Hardness shall be determined on material representing each lot. Hardness shall be determined in the as-cast condition unless otherwise specified in the purchase order. The results shall conform to the requirements specified in Table S8.1.

S8.2 Hardness shall be determined on a sample cast for that purpose, or on a casting randomly selected from a lot. If a casting is used for a hardness sample, indentations shall be made in a surface that will not be subsequently machined. Hardness values reported shall be representative of the base metal of the castings and not of any surface contamination due to mold-metal interactions.

S8.3 Hardness tests shall be made in accordance with the requirements of Test Methods E 10 or E 18.

TABLE S8.1
HARDNESS REQUIREMENTS

Grade	Brinell Hardness, max[A]	Rockwell Hardness, max[A]
C-2	210	B 96
C-3	235	C 24
C-5	365	C 39
C-6	335	C 36
Ti-Pd 7B	210	B 96
Ti-Pd 8A	235	C 24
Ti-Pd16	210	B 96
Ti-Pd17	235	C 24
Ti-Pd18	365	C 39

[A] Average of three tests.

SPECIFICATION FOR COPPER-NICKEL ALLOY CASTINGS

SB-369

(Identical with ASTM B 369-96 for the alloys covered except for mandatory certification and deletion of Supplementary Requirements for government procurement.)

1. Scope

1.1 This specification covers requirements for copper-nickel alloy castings whose nominal compositions are shown in Table 1. It is as follows:

Copper Alloy UNS No.	Previous Designation
C96200	Alloy A

1.2 Castings of these alloys are used primarily for corrosion-resisting purposes in both constructional and pressure applications and particularly in marine pumps, valves, and fittings.

1.3 These alloys are considered weldable, but they may be ordered with a weld test to ensure weldability. When extensive welding is to be performed on the casting, weldability tests should be specified in the ordering information (4.2.6) to ensure proper welding characteristics.

1.4 The values stated in inch-pound units are to be regarded as the standard. The values given in parentheses are provided for information purposes only.

1.5 The hazard statement applies only to Section 6, Weldability Test, of this specification. *This standard does not purport to address all of the safety concerns, if any, associated with its use. It is the responsibility of the user of this standard to establish appropriate safety and health practices and determine the applicability of regulatory limitations prior to use.*

2. Referenced Documents

2.1 *ASTM Standards:*

B 208 Practice for Preparing Tension Test Specimens for Copper Alloys for Sand, Permanent Mold, Centrifugal, and Continuous Castings

B 846 Terminology for Copper and Copper Alloys

E 527 Practice for Numbering Metals and Alloys (UNS)

2.2 *ASME Standard:*

SB-824 Specification for General Requirements for Copper Alloy Castings

2.3 *AWS Standard:*

AWS A5.6 Specification for Copper and Copper-Alloy Arc-Welding Electrodes

3. Terminology

3.1 Definitions of terms relating to copper alloys can be found in Terminology B 846.

4. Ordering Information

4.1 Orders for castings under this specification should include the following information:

4.1.1 Specification title, number, and year of issue,

4.1.2 Quantity of castings,

TABLE 1
NOMINAL COMPOSITIONS

Copper Alloy UNS No.	Copper, %	Nickel, %	Iron, %	Silicon, %	Manganese, %	Niobium, %
C96200	87.5	10.0	1.5	0.1	0.9	...

TABLE 2
CHEMICAL REQUIREMENTS

	Copper Alloy UNS No. C96200	
	Min., %	Max, %
Copper	balance	
Lead	...	0.01
Iron	1.0	1.8
Nickel, incl Cobalt	9.0	11.0
Manganese	...	1.5
Silicon	...	0.50
Niobium	...	1.0
Phosphorus	...	0.02
Sulfur	...	0.02
Carbon	...	0.10

4.1.3 Copper alloy UNS number (Table 2),

4.1.4 Pattern or drawing number, and condition (as-cast, machined, etc.),

4.2 The following are optional and should be specified in the purchase order when required:

4.2.1 Pressure test or soundness requirements (Specification SB-824),

4.2.2 Witness inspection (Specification SB-824),

4.2.3 Foundry test report (Specification SB-824),

4.2.4 Product marking (Specification SB-824),

4.2.5 Weldability test (1.3 and Section 6), and

4.2.6 Approval of weld procedure and records of repairs (Section 10).

4.3 Orders for castings under this specification shall include certification (Specification SB-824).

5. Chemical Composition

5.1 The casting shall conform to the chemical requirements shown in Table 2.

5.2 These specification limits do not preclude the presence of other elements. Limits may be established and analysis required for unnamed elements agreed upon between the manufacturer or supplier and purchaser. Copper may be given as remainder and may be taken as the difference between the sum of all elements analyzed and 100%. When all the elements in the table are analyzed, their sum shall be 99.5% minimum.

6. Mechanical Properties

6.1 Mechanical properties shall be determined from separately cast test bar castings, and shall meet the requirements shown in Table 3.

TABLE 3
MECHANICAL REQUIREMENTS

	Copper Alloy UNS No.
	C96200
Tensile strength, min., ksi[A] (MPa)	45 (310)
Yield strength,[B] min., ksi[A] (MPa)	25 (170)
Elongation in 2 in., (50.8 mm) %	20

[A] ksi = 1,000 psi.

[B] Yield strength shall be determined as the stress producing an elongation under load of 0.5%, that is, 0.01 in. (0.254 mm) in a gage length of 2 in. (50.8 mm).

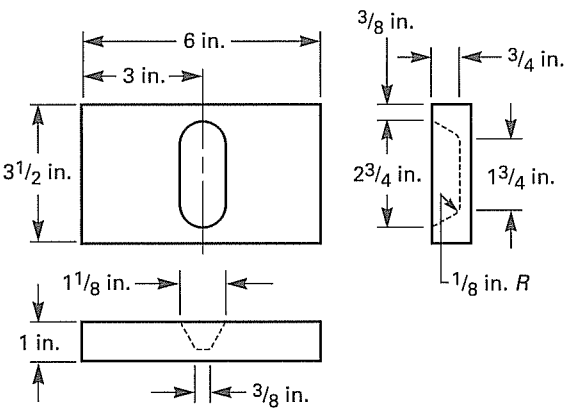

NOTE 1 — For metric equivalents see Table 4.

FIG. 1 CAST BLOCK FOR WELDABILITY TEST

7. Weldability Test

7.1 When specified in the purchase order, at least one test block cast as shown in Fig. 1 shall be prepared for each lot of welding grade castings (4.2.6).

7.2 The block shall be molded, gated, and risered in a manner to produce a sound casting without defects that might interfere with welding or the interpretation of the results of the test.

7.3 The groove in the test block shall be completely filled with weld deposit metal, using the manual metallic-arc prcess with 1/8 (3.18-mm) or 5/32-in. (3.97-mm) diameter copper-nickel (70-30) coated electrodes conforming to classification AWS ECuNi of AWS Specification A5.6. The interpass temperature need not be controlled, unless it is to be controlled in fabrication.

7.4 One 3/8-in. (9.52-mm) minimum thick bend coupon (see Fig. 2), shall be removed longitudinally from the center of the welded block by machining, sawing, abrasive cutting, or other suitable means. Cut surfaces and edges should be sanded smooth if necessary. The side

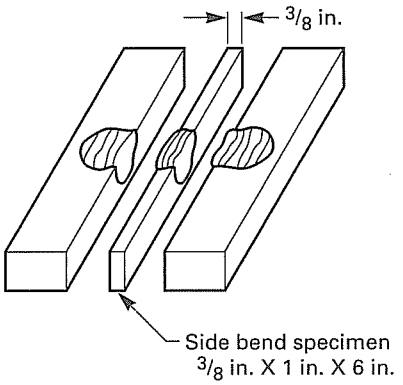

NOTE 1 — For metric equivalents see Table 4.

FIG. 2 WELDABILITY TEST BLOCK

bend specimen shall then be bent 180° in a guided bend jig around a mandrel 1½ in. (38.1 mm) in diameter with the weld located at the center of the bend.

7.5 Cracks or other open defects exceeding ⅛ in. (3.18 mm) measured in any direction in the fusion zone or heat-affected zone on the convex surface of the specimen after bending shall be cause for rejection. Cracks originating at weld-bead undercuts, at weld-slag inclusions, or at casting defects shall not be cause for rejection.

8. Casting Repair

8.1 Alloys included in this specification are generally weldable. Weld repairs may be made at the manufacturer's discretion provided each excavation does not exceed 20% of the casting section or wall thickness or 4% of the casting surface area.

8.2 Excavations that exceed those described in 7.1 may be made at the manufacturer's discretion except that when specified in the purchase order (9.1.11) the weld procedure shall be approved by the purchaser and the following record shall be maintained:

8.2.1 A sketch or drawing showing the dimensions, depth, and location of excavations.

8.2.2 Post weld heat treatment, when applicable.

8.2.3 Weld repair inspection results.

8.2.4 Casting identification number.

8.2.5 Weld procedure identification number.

8.2.6 Welder identification, and

8.2.7 Name of inspector.

8.3 The castings shall not be impregnated without approval of the purchaser.

9. General Requirements

9.1 The following sections of Specification SB-824 form a part of this specification. In the event of a conflict between this specification and Specification SB-824, the requirements of this specification shall take precedence.

9.1.1 Terminology (Section 3),

9.1.2 Other Requirements (Section 7),

9.1.3 Dimensions, Mass, and Permissible Variations (Section 8),

9.1.4 Workmanship, Finish, and Appearance (Section 9),

9.1.5 Sampling (Section 10),

9.1.6 Number of Tests and Retests (Section 11),

9.1.7 Specimen Preparation (Section 12),

9.1.8 Test Methods (Section 13),

9.1.9 Significance of Numerical Limits (Section 14),

9.1.10 Inspection (Section 15),

9.1.11 Rejection and Rehearing (Section 16),

9.1.12 Certification (Section 17),

9.1.13 Test Report (Section 18),

9.1.14 Product Marking (Section 19), and

9.1.15 Packaging and Package Marking (Section 20).

10. Sampling

10.1 Test bar castings for the copper alloy UNS number in this specification shall be cast to the form and dimensions shown in Fig. 1 or Fig. 2 in Practice B 208.

11. Test Methods

11.1 Analytical chemical methods are given in Specification SB-824.

11.1.1 Test methods to be followed for the determination of elements resulting from contractual or purchase order agreement shall be as agreed upon between the manufacturer or supplier and the purchaser.

12. ASME Requirements

12.1 Castings in copper allloy UNS No. C96200 shall comply with the following:

12.1.1 Certification requirements of Specification SB-824.

12.1.2 Foundry test report requirements of Specification SB-824.

12.1.3 Castings shall be marked with the manufacturer's name, the copper alloy UNS number, and the casting quality factor. In addition, heat numbers or serial numbers that are traceable to heat numbers shall be marked on all pressure-containing castings individually weighing 50 lb (22.7 kg) or more. Pressure-containing castings weighing less than 50 lb (22.7 kg) shall be marked with either the heat number or a serial number that will identify the casting as to the month in which it was poured. Marking shall be in such a position as to not injure the usefulness of the casting.

TABLE 4 METRIC CONVERSION VALUES FOR FIGS. 1 AND 2

in.	mm
1/8	3.18
3/8	9.52
3/4	19.0
1	25.4
1 1/8	28.6
1 3/4	44.4
2 3/4	69.8
3	76.2
3 1/2	88.9
6	152

13. Keywords

13.1 copper-alloy castings; copper-nickel castings

SPECIFICATION FOR TITANIUM AND TITANIUM ALLOY FORGINGS

SB-381

(Identical with ASTM Specification B 381-00 for all grades except for section 15.1, which requires mandatory certification, and corrected footnote references in Table 1.)

1. Scope

1.1 This specification covers 31 grades of annealed titanium and titanium alloy forgings as follows:

1.1.1 *Grade F-1* — Unalloyed titanium,

1.1.2 *Grade F-2* — Unalloyed titanium,

1.1.3 *Grade F-3* — Unalloyed titanium,

1.1.4 *Grade F-4* — Unalloyed titanium,

1.1.5 *Grade F-5* — Titanium alloy (6% aluminum, 4% vanadium),

1.1.6 *Grade F-6* — Titanium alloy (5% aluminum, 2.5% tin),

1.1.7 *Grade F-7* — Unalloyed titanium plus 0.12 to 0.25% palladium,

1.1.8 *Grade F-9* — Titanium alloy (3% aluminum, 2.5% vanadium),

1.1.9 *Grade F-11* — Unalloyed titanium plus 0.12 to 0.25% palladium,

1.1.10 *Grade F-12* — Titanium alloy (0.3% molybdenum, 0.8% nickel),

1.1.11 *Grade F-13* — Titanium alloy (0.5% nickel, 0.05% ruthenium),

1.1.12 *Grade F-14* — Titanium alloy (0.5% nickel, 0.05% ruthenium),

1.1.13 *Grade F-15* — Titanium alloy (0.5% nickel, 0.05% ruthenium),

1.1.14 *Grade F-16* — Unalloyed titanium plus 0.04% to 0.08% palladium,

1.1.15 *Grade F-17* — Unalloyed titanium plus 0.04% to 0.08% palladium,

1.1.16 *Grade F-18* — Titanium alloy (3% aluminum, 2.5% vanadium) plus 0.04% to 0.08% palladium,

1.1.17 *Grade F-19* — Titanium alloy (3% aluminum 8% vanadium, 6% chromium, 4% zirconium, 4% molybdenum),

1.1.18 *Grade F-20* — Titanium alloy (3% aluminum, 8% vanadium, 6% chromium, 4% zirconium, 4% molybdenum) plus 0.04% to 0.08% palladium,

1.1.19 *Grade F-21* — Titanium alloy (3% aluminum, 2.7% niobium, 15% molybdenum, 0.25% silicon),

1.1.20 *Grade F-23* — Titanium alloy (6% aluminum, 4% vanadium, extra low interstitials, ELI),

1.1.21 *Grade F-24* — Titanium alloy (6% aluminum, 4% vanadium) plus 0.04% to 0.08% palladium,

1.1.22 *Grade F-25* — Titanium alloy (6% aluminum, 4% vanadium) plus 0.3% to 0.8% nickel and 0.04% to 0.08% palladium,

1.1.23 *Grade F-26* — Unalloyed titanium plus 0.08 to 0.14% ruthenium,

1.1.24 *Grade F-27* — Unalloyed titanium plus 0.08 to 0.14% ruthenium.

1.1.25 *Grade F-28* — Titanium alloy (3% aluminum, 2.5% vanadium plus 0.08% to 0.14% ruthenium),

1.1.26 *Grade F-29* — Titanium alloy (6% aluminum, 4% vanadium, extra low interstitial, ELI, plus 0.08% to 0.14% ruthenium),

1.1.27 *Grade F-30* — Titanium alloy (0.3% cobalt, 0.05% palladium),

1.1.28 *Grade F-31* — Titanium alloy (0.3% cobalt, 0.05% palladium),

1.1.29 *Grade F-32* — Titanium alloy (5% aluminum, 1% vanadium, 1% tin, 1% zirconium, 0.8% molybdenum),

1.1.30 *Grade F-33* — Titanium alloy (0.4% nickel, 0.015% palladium, 0.025% ruthenium, 0.15% chromium), and

1.1.31 *Grade F-34* — Titanium alloy (0.4% nickel, 0.015% palladium, 0.025% ruthenium, 0.15% chromium).

1.2 The values stated in inch-pound units are to be regarded as the standard. The values given in parentheses are for information only.

2. Referenced Documents

2.1 *ASTM Standards:*

B 348 Specification for Titanium and Titanium Alloy Bars and Billets

E 8 Test Methods for Tension Testing of Metallic Materials

E 29 Practice for Using Significant Digits in Test Data to Determine Conformance With Specifications

E 120 Test Methods for Chemical Analysis of Titanium and Titanium Alloys

E 1409 Test Method for the Determination of Oxygen in Titanium and Titanium Alloys by the Inert Gas Fusion Technique

E 1447 Test Method for the Determination of Hydrogen in Titanium and Titanium Alloys by the Inert Gas Fusion Thermal Conductivity Method

3. Terminology

3.1 *Descriptions of Terms Specific to This Standard:*

3.1.1 *bar, n* — a hot rolled, forged, or cold worked semifinished solid section product whose cross sectional area is less than 16 in.^{2} (10 323 mm^2).

3.1.2 *billet, n* — a solid semifinished section, hot rolled or forged from an ingot, with a cross sectional area greater than 16 in.^{2} (10 323 mm^2).

3.1.3 *forging, n* — any product of work on metal formed to a desired shape by impact or pressure in hammers, forging machines, upsetters presses, or related forming equipment.

4. Ordering Information

4.1 Orders for forgings under this specification shall include the following information, as applicable:

4.1.1 Grade number (Section 1),

4.1.2 Tensile properties (Table 1),

4.1.3 Dimensions and tolerances (Section 9),

4.1.4 Sampling, mechanical properties (Section 7),

4.1.5 Methods for chemical analysis (Section 6),

4.1.6 Marking (Section 16),

4.1.7 Packaging (Section 16),

4.1.8 Certification (Section 15),

4.1.9 Disposition of rejected material (Section 13), and

4.1.10 Supplementary requirements (SI).

5. Materials and Manufacture

5.1 Material conforming to the latest revision of Specification B 348 shall be used when producing forgings to this specification.

6. Chemical Composition

6.1 The grades of titanium and titanium alloy metal covered by this specification shall conform to the requirements as to chemical composition prescribed in Table 2.

6.1.1 The elements listed in Table 2 are intentional alloy additions or elements that are inherent to the manufacture of titanium sponge, ingot, or mill product.

6.1.1.1 Elements other than those listed in Table 2 are deemed to be capable of occurring in the grades listed in Table 2 by and only by way of unregulated or unanalyzed scrap additions to the ingot melt. Therefore, product analysis for elements not listed in Table 2 shall not be required unless specified and shall be considered to be in excess of the intent of this specification.

6.1.2 Elements intentionally added to the melt must be identified, analyzed, and reported in the chemical analysis.

6.2 When agreed upon by the producer and purchaser and requested by the purchaser in his written purchase order, chemical analysis shall be completed for specific residual elements not listed in this specification.

6.3 *Product Analysis* — Product analysis tolerances do not broaden the specified heat analysis requirements, but cover variations between laboratories in the measurement of chemical content. The manufacturer shall not ship material that is outside the limits specified in Table 2 for the applicable grade. Product analysis limits shall be as specified in Table 3.

6.4 *Sampling* — Samples for chemical analysis shall be representative of material being tested. Except for hydrogen and unless otherwise specified, chemical analysis of ingot or billet shall be reported. Samples for hydrogen determination shall be obtained from the forgings on a test basis and a frequency as agreed upon between the

TABLE 1
TENSILE REQUIREMENTS[A]

Grade	Tensile Strength, min		Yield Strength (0.2 % Offset), min or Range		Elongation in 4*D*, min, %	Reduction of Area, min, %
	ksi	(MPa)	ksi	(MPa)		
F-1	35	(240)	25	(170)	24	30
F-2	50	(345)	40	(275)	20	30
F-3	65	(450)	55	(380)	18	30
F-4	80	(550)	70	(483)	15	25
F-5	130	(895)	120	(828)	10	25
F-6	120	(828)	115	(795)	10	25
F-7	50	(345)	40	(275)	20	30
F-9[B]	120	(828)	110	(759)	10	25
F-9	90	(620)	70	(483)	15	25
F-11	35	(240)	25	(170)	24	30
F-12	70	(483)	50	(345)	18	25
F-13	40	(275)	25	(170)	24	30
F-14	60	(410)	40	(275)	20	30
F-15	70	(483)	55	(380)	18	25
F-16	50	(345)	40	(275)	20	30
F-17	35	(240)	25	(170)	24	30
F-18	90	(620)	70	(483)	15	25
F-18[B]	90	(620)	70	(483)	12	20
F-19[C]	115	(793)	110	(759)	15	25
F-19[D]	135	(930)	130 to 159	(897) to (1096)	10	20
F-19[E]	165	(1138)	160 to 185	(1104) to (1276)	5	20
F-20[C]	115	(793)	110	(759)	15	25
F-20[D]	135	(930)	130 to 159	(897) to (1096)	10	20
F-20[E]	165	(1138)	160 to 185	(1104) to (1276)	5	20
F-21[C]	115	(793)	110	(759)	15	35
F-21[D]	140	(966)	130 to 159	(897) to (1096)	10	30
F-21[E]	170	(1172)	160 to 185	(1104) to (1276)	8	20
F-23	120	(828)	110	(759)	10	25
F-23[B]	120	(828)	110	(759)	7.5[F], 6.0[G]	25
F-24	130	(895)	120	(828)	10	25
F-25	130	(895)	120	(828)	10	25
F-26	50	(345)	40	(275)	20	30
F-27	35	(240)	25	(170)	24	30
F-28	90	(620)	70	(483)	15	25
F-28[B]	90	(620)	70	(483)	12	20
F-29	120	(828)	110	(759)	10	25
F-29[B]	120	(828)	110	(759)	7.5[F], 6.0[G]	15
F-30	50	(345)	40	(275)	20	30
F-31	65	(450)	55	(380)	18	30
F-32	100	(689)	85	(586)	10	25
F-33	50	(345)	40	(275)	20	30
F-34	65	(450)	55	(380)	18	30

[A] These properties apply to forgings having a cross section no greater than 3 in.^{2} (1935 mm^2). Mechanical properties of forgings having greater cross sections shall be negotiated between the manufacturer and the purchaser.

[B] Properties for material in transformed-beta condition.

[C] Properties for material in the solution treated condition.

[D] Properties for material in the solution treated and aged condition–Moderate strength (determined by aging temperature).

[E] Properties for solution treated and aged condition-High Strength (determined by aging temperature).

[F] For product section or wall thickness values <1.0 in.

[G] For product section or wall thickness values ≤1.0 in.

TABLE 2
CHEMICAL REQUIREMENTS[A]

Element	Composition, % Grade F-1	F-2	F-3	F-4
Nitrogen, max	0.03	0.03	0.05	0.05
Carbon, max	0.08	0.08	0.08	0.08
Hydrogen,[B,C] max	0.015	0.015	0.015	0.015
Iron, max	0.20	0.30	0.30	0.50
Oxygen, max	0.18	0.25	0.35	0.40
Residuals[D,E,F] (each), max	0.1	0.1	0.1	0.1
Residuals[D,E,F] (total), max	0.4	0.4	0.4	0.4
Titanium[G]	balance	balance	balance	balance

Element	Composition, % Grade F-5	F-6	F-7	F-9	F-11	F-12
Nitrogen, max	0.05	0.03	0.03	0.03	0.03	0.03
Carbon, max	0.08	0.08	0.08	0.08	0.08	0.08
Hydrogen,[B,C] max	0.015	0.015	0.015	0.015	0.015	0.015
Iron, max	0.40	0.50	0.30	0.25	0.20	0.30
Oxygen, max	0.20	0.20	0.25	0.15	0.18	0.25
Aluminum	5.5 to 6.75	4.0 to 6.0	...	2.5 to 3.5	...	...
Vanadium	3.5 to 4.5	...	...	2.0 to 3.0	...	...
Tin	...	2.0 to 3.0	...	...	...	...
Palladium	...	...	0.12 to 0.25	...	0.12 to 0.25	...
Molybdenum	...	...	...	...	...	0.2 to 0.4
Nickel	...	...	...	...	...	0.6 to 0.9
Residuals[D,E,F] (each), max	0.1	0.1	0.1	0.1	0.1	0.1
Residuals[D,E,F] (total), max	0.4	0.4	0.4	0.4	0.4	0.4
Titanium[G]	balance	balance	balance	balance	balance	balance

Element	F-13	F-14	F-15
Nitrogen, max	0.03	0.03	0.05
Carbon, max	0.08	0.08	0.08
Hydrogen,[B,C] max	0.015	0.015	0.015
Iron, max	0.20	0.30	0.30
Oxygen, max	0.10	0.15	0.25
Ruthenium	0.04 to 0.06	0.04 to 0.06	0.04 to 0.06
Nickel	0.04 to 0.06	0.04 to 0.06	0.04 to 0.06
Residuals[D,E,F] (each), max	0.1	0.1	0.1
Residuals[D,E,F] (total), max	0.4	0.4	0.4
Titanium[G]	balance	balance	balance

Element	F-16	F-17	F-18
Nitrogen, max	0.03	0.03	0.03
Carbon, max	0.08	0.08	0.08
Hydrogen,[B,C] max	0.015	0.015	0.015
Iron, max	0.30	0.20	0.25
Oxygen, max	0.25	0.18	0.15
Palladium	0.04 to 0.08	0.04 to 0.08	0.04 to 0.08
Aluminum	...	...	2.5 to 3.5
Vanadium	...	...	2.0 to 3.0
Residuals[D,E,F] (each), max	0.1	0.1	0.1
Residuals[D,E,F] (total), max	0.4	0.4	0.4
Titanium[G]	balance	balance	balance

(continued)

TABLE 2
CHEMICAL REQUIREMENTS[A] (CONT'D)

Element	F-19	F-20	F-21	F-23	F-24	F-25	F-26
Nitrogen, max	0.03	0.03	0.03	0.03	0.05	0.05	0.03
Carbon, max	0.05	0.05	0.05	0.08	0.08	0.08	0.08
Hydrogen,[B,C] max	0.02	0.02	0.015	0.0125	0.015	0.0125	0.015
Iron, max	0.30	0.30	0.40	0.25	0.40	0.40	0.30
Oxygen, max	0.12	0.12	0.17	0.13	0.20	0.20	0.25
Aluminum	3.0 to 4.0	3.0 to 4.0	2.5 to 3.5	5.5 to 6.5	5.5 to 6.75	5.5 to 6.75	...
Vanadium	7.5 to 8.5	7.5 to 8.5	...	3.5 to 4.5	3.5 to 4.5	3.5 to 4.5	...
Tin	...	...	...	...	...	...	...
Ruthenium	...	...	...	...	...	...	0.08–0.14
Cobalt	...	...	...	...	...	...	...
Molybdenum	3.5 to 4.5	3.5 to 4.5	14.0 to 16.0	...	...	...	...
Zirconium	3.5 to 4.5	3.5 to 4.5	...	...	...	...	...
Chromium	5.5 to 6.5	5.5 to 6.5	...	...	...	...	...
Niobium	...	...	2.2 to 3.2	...	...	...	...
Silicon	...	...	0.15 to 0.25	...	...	...	...
Palladium	...	0.04 to 0.08	...	...	0.04 to 0.08	0.04 to 0.08	...
Nickel	...	...	...	...	...	0.3 to 0.8	...
Residuals[D,E,F] (each), max	0.15	0.15	0.1	0.1	0.1	0.1	0.1
Residuals[D,E,F] (total), max	0.4	0.4	0.4	0.4	0.4	0.4	0.4
Titanium[G]	balance	balance	balance	balance	balance	balance	balance

Element	F-27	F-28	F-29	F-30	F-31	F-32	F-33	F-34
Nitrogen, max	0.03	0.03	0.03	0.03	0.05	0.03	0.03	0.05
Carbon, max	0.08	0.08	0.08	0.08	0.08	0.08	0.08	0.08
Hydrogen,[B,C] max	0.015	0.015	0.015	0.015	0.015	0.015	0.015	0.015
Iron, max	0.20	0.25	0.25	0.30	0.30	0.25	0.30	0.30
Oxygen, max	0.18	0.15	0.13	0.25	0.35	0.11	0.25	0.35
Aluminum	...	2.5–3.5	5.5–6.5	...	...	4.5–5.5	...	...
Vanadium	...	2.0–3.0	3.5–4.5	...	...	0.6–1.4	...	...
Tin	...	...	...	...	...	0.6–1.4	...	...
Ruthenium	0.08–0.14	0.08–0.14	0.08–0.14	...	...	...	0.02–0.04	0.02–0.04
Palladium	...	...	...	0.04 to 0.08	0.04 to 0.08	...	0.01–0.02	0.01–0.02
Cobalt	...	...	...	0.20 to 0.80	0.20 to 0.80	...	...	...
Molybdenum	...	...	...	...	...	0.6–1.2	...	...
Chromium	...	...	...	...	...	...	0.1–0.2	0.1–0.2
Nickel	...	...	...	...	...	...	0.35–0.55	0.35–0.55
Niobium	...	...	...	...	...	...	...	...
Zirconium	...	...	...	...	...	0.6–1.4	...	...
Silicon	...	...	...	...	...	0.06–1.4	...	...
Residuals[D,E,F] (each), max	0.1	0.1	0.1	0.1	0.1	0.1	0.1	0.1
Residuals[D,E,F] (total), max	0.4	0.4	0.4	0.4	0.4	0.4	0.4	0.4
Titanium[G]	balance	balance	balance	balance	balance	balance	remainder	remainder

[A] Analysis shall be completed for all elements listed in this table for each grade. The analysis results for the elements not quantified in the table need not be reported unless the concentration level is greater than 0.1% each or 0.4% total.

[B] Lower hydrogen may be obtained by negotiation with the manufacturer.

[C] Final product analysis.

[D] Need not be reported.

[E] A residual is an element present in a metal or alloy in small quantities and is inherent to the manufacturing process but not added intentionally. In titanium these elements include aluminum, vanadium, tin, chromium, molybdenum, niobium, zirconium, hafnium, bismuth, ruthenium, palladium, yttrium, copper, silicon, cobalt, tantalum, nickel, boron, manganese, and tungsten.

[F] The purchaser may, in his written purchase order, request analysis for specific residual elements not listed in this specification.

[G] The percentage of titanium is determined by difference.

forger and the purchaser. The utmost care must be used in sampling titanium for chemical analysis because of its great affinity for elements such as oxygen, nitrogen, and hydrogen. Therefore, the cutting and handling of samples should include practices that will prevent contamination. Samples shall be collected from clean metal.

6.5 The methods of analysis used shall be in accordance with Test Methods E 120, E 1409, and E 1447, as applicable, or as agreed upon between the manufacturer and the purchaser.

6.6 At least two samples for chemical analysis shall be tested to determine chemical composition. Samples shall be taken from opposite extremes of the product to be analyzed.

7. Mechanical Properties

7.1 Forgings supplied under this specification shall conform to the requirements as to mechanical properties specified in Table 1, as applicable.

7.2 Specimens for tension tests are to be machined and tested in accordance with Test Methods E 8. Tensile properties shall be determined using a strain rate of 0.003 to 0.007 in./in. · min through the specified yield strength. After the specified yield strength has been reached, the crosshead speed shall be increased to a rate sufficient to produce fracture in approximately one additional minute.

7.3 *Sampling* — Tension test specimens shall be machined from material as agreed upon by the manufacturer and the purchaser.

8. Nondestructive Tests

8.1 Nondestructive test requirements such as ultrasonic test, X ray, or surface inspection shall be specified by the purchaser, if required. The standard for acceptance or rejection shall be agreed upon between the forger and the purchaser.

9. Dimensions and Permissible Variations

9.1 Dimensions and tolerances of titanium and titanium alloy forgings covered by this specification shall be as shown on the applicable forging drawing or otherwise agreed upon by the manufacturer and the purchaser.

10. Workmanship, Finish, and Appearance

10.1 Titanium alloy forgings shall be free of injurious external and internal imperfections of a nature that will interfere with the purpose for which they are intended.

TABLE 3
PERMISSIBLE VARIATIONS IN PRODUCT ANALYSIS

Element	Product Analysis Limits, Max or Range, %	Permissible Variation Product Analysis
Nitrogen	0.05	+0.02
Carbon	0.10	+0.02
Hydrogen	0.02	+0.002
Iron	0.50	+0.15
Oxygen	0.30	+0.03
	0.31 to 0.40	±0.04
Aluminum	2.5 to 6.75	±0.40
Vanadium	0.6 to 4.5	±0.15
	7.5 to 8.5	±0.40
Tin	0.6 to 3.0	±0.15
Palladium	0.01 to 0.02	±0.002
Palladium	0.04 to 0.08	±0.005
Palladium	0.12 to 0.25	±0.02
Ruthenium	0.02 to 0.04	±0.005
Ruthenium	0.04 to 0.06	±0.005
Ruthenium	0.08 to 0.14	±0.01
Zirconium	3.5 to 4.5	±0.20
Zirconium	0.6 to 1.4	±0.15
Chromium	0.1 to 0.2	±0.02
Chromium	5.5 to 6.5	±0.30
Niobium	2.2 to 3.2	±0.15
Molybdenum	0.2 to 0.4	±0.03
	0.6 to 1.2	±0.15
	3.5 to 4.5	±0.20
	14.0 to 16.0	±0.50
Nickel	0.3 to 0.9	±0.05
Silicon	0.06 to 0.25	±0.02
Cobalt	0.2 to 0.8	±0.05
Residuals[A] (each)	0.15	+0.02

[A] A residual is an element present in a metal or an alloy in small quantities and is inherent to the manufacturing process but not added intentionally. In titanium these elements include aluminum, vanadium, tin, iron, chromium, molybdenum, niobium, zirconium, hafnium, bismuth, ruthenium, palladium, yttrium, copper, silicon, cobalt, tantalum, nickel, boron, manganese, and tungsten.

Annealed forgings may be furnished as descaled, sandblasted, or ground. The manufacturer shall be permitted to remove minor surface imperfections by spot grinding if such grinding does not reduce the thickness of the forging below the minimum permitted by the tolerance for the forging at the applicable location.

11. Retests

11.1 If the results of any chemical or mechanical property test lot are not in conformance with the requirements of this specification, the lot may be retested at the option of the manufacturer. The frequency of the retest will double the initial number of tests. If the results of the retest conform to the specification, then the retest values will become the test values for certification. Only original conforming test results or the conforming retest

results shall be reported to the purchaser. If the results for the retest fail to conform to the specification, the material will be rejected in accordance with Section 13.

12. Rounding-Off Procedure

12.1 For purposes of determining conformance with this specification, an observed or a calculated value shall be rounded off to the nearest "unit" in the last right-hand significant digit used in expressing the limiting value. This is in accordance with the round-off method of Practice E 29.

13. Rejection

13.1 Forgings not conforming to this specification or to authorized modifications shall be subject to rejection. Unless otherwise specified, rejected forgings may be returned to the manufacturer at the manufacturer's expense, unless the purchaser receives, within three weeks of notice of rejection, other instructions for disposition.

14. Referee Test and Analysis

14.1 In the event of disagreement between the manufacturer and the purchaser on the conformance of the material to the requirements of this specification, a mutually acceptable referee shall perform the tests in question. The referee's testing shall be used in determining conformance of the material to this specification.

15. Certification

15.1 The manufacturer shall supply at least one copy of his report certifying that the forgings supplied have been inspected and tested in accordance with the requirements of this specification and that the results of chemical analysis and mechanical tests meet the requirements of the specification for the appropriate grade.

16. Packaging and Package Marking

16.1 *Packaging* — Unless otherwise specified, forgings purchased under this specification shall be packaged in accordance with the manufacturer's standard practice.

16.2 *Marking* — Forgings shall be marked for identification as agreed upon by the manufacturer and the purchaser.

17. Keywords

17.1 forgings; titanium; titanium alloys

SUPPLEMENTARY REQUIREMENTS

SUPPLEMENTARY REQUIREMENTS COVERING GRADE F3 TITANIUM FORGINGS

The following supplementary requirements are primarily intended for U.S. military applications and shall apply only when specified by the purchaser in the inquiry, contract, or order.

S1. U.S. Military Requirements

S1.1 Referenced Documents section follows.

S1.2 Unless otherwise specified in the contract or purchase order, the seller is responsible for the performance of all inspection and test requirements in this specification, and the seller may use his or other suitable facilities for the performance of the inspection and testing.

S1.3 Grade F3 composition shall be modified as follows:

Hydrogen	0.0125 max
Iron	0.20 max
Oxygen	0.26 max

S1.4 Two tensile specimens shall be taken from each lot of forgings up to and 125 pounds, and two tensile specimens shall be taken from each forging greater than 125 pounds for verification of compliance with Grade F-3 mechanical properties of Table 3. A lot shall constitute all forgings from the same heat, of the same design and size and heat treated in the same heat treat furnace load. The test specimens shall be taken from integral prolongations or extra forgings may be provided by the forger. Forgings under 3½ in. (90 mm) in cross section may use separately forged test bars provided the wall thickness and amount of working are equivalent to the forgings being supplied. Extra forgings may be provided for samples when forgings are over 3½ in. (90 mm) in cross section provided samples cannot be taken from prolongations or by trepanning. Samples shall be taken from the section of forging having the largest cross section. The longitudinal axis of the tensile specimens shall be parallel to the major direction of metal flow in the forging.

S1.5 Repair welding is not permitted.

S1.6 Each forging shall be ultrasonically inspected in accordance with MIL-STD-2154 throughout 100% of their volume. Inspection shall be performed after heat treating when the forging is machined to the configuration for ultrasonic inspection as shown on the forging sketch or drawing. Inspection shall be performed prior to drilling holes, cutting keyways, tapers, grooves, or machining section to final contour. Forgings shall be scanned using a straight beam technique such that all major planes are covered. Disc type forgings shall be scanned using a straight beam from at least one flat face and radially from the circumference when possible. Cylindrical, ring, and hollow forgings shall be scanned from the entire external surface using the straight beam technique, and in the axial direction to the maximum extent possible. Acceptance criteria shall be to class A of MIL-STD-2154.

S1.7 All surfaces of each forging shall be liquid penetrant inpected in accordance with NAVSEA T9074-AS-GIB-010/271. Acceptance criteria shall be in accordance with NAVSEA S9074-AR-GIB-010/278 as specified in the order.

S1.8 Forgings shall be free of foreign material and contaminants such as sulfur, lead, marking paints or machining or forming lubricants. Forgings shall be cleaned prior to any heat treatment operations. Forgings shall be free of any oxygen rich layer, such as alpha case.

S1.9 The first forging of each type and design submitted for inspection shall be the first article sample. Mechanical properties for first article inspections shall be determined throughout the forging as specified in the order (which should also include specific instructions regarding arrangements for examinations, approval of test results, and disposition of the first article samples), and the number and location of the test specimens and the acceptance criteria shall be as specified or as agreed upon between the contracting activity and the manufacturer. In addition, a full cross-section shall be macroetched in accordance with ASTM E 340 and examined at 10x magnification for uniformity, soundness, grain size, and grain flow. The macro etch cross section shall evidence uniformity of quality, soundness, and freedom from cracks and porosity. A fully wrought structure shall be

evident and the variation in grain size shall be such that it will not interfere with ultrasonic examination.

The manufacturer shall maintain a record of production practices used for the first article forging. In the event of change in the production practice in the same or subsequent order, the manufacturer shall notify the contracting activity and obtain approval of the changes. The manufacturer may by required to perform specific first article tests and examinations to verify that the change will not or has not degraded forging quality.

S1.10 The material shall be electron beam and/or plasma melted or shall be multiple melted with at least one of the melting cycles under vacuum.

S2. Referenced Documents

S2.1 *ASTM Standard:*

E 340 Test Method for Macroetching Metals and Alloys

S2.2 *Military Standards:*

T9074-AS-GIB-010/271 Requirements for Nondestructive Testing Methods

S9074-AR-GIB-010/278 Requirements for Fabrication Welding and Inspection, and Casting Inspection and Repair for Machinery, Piping, and Pressure Vessels

MIL-STD-2154 Inspection, Ultrasonic, Wrought Metals, Processing for

SPECIFICATION FOR U-BEND SEAMLESS COPPER AND COPPER ALLOY HEAT EXCHANGER AND CONDENSER TUBES

SB-395

(Identical with ASTM Specification B 395-93 for the alloys and tempers covered except for the deletion of Supplementary Requirements for government procurement, and editorial differences. Certification is mandatory.)

1. Scope

1.1 This specification covers U-bend seamless condenser, evaporator, and heat exchanger tubes of copper and copper alloys up to 2 in., inclusive, in diameter. Tubes for this application are normally made from the following copper or copper alloys:

Copper Alloy UNS No. [A]	Previously Used Designation	Type of Metal
C10200	OF[B]	oxygen-free without residual deoxidants
C12000	DLP[B]	phosphorized, low residual phosphorous
C12200	DHP[B]	phosphorized, high residual phosphorus
C14200	DPA[B]	phosphorized, arsenical
C19200	...	phosphorized, 1% iron
C23000	...	red brass
C44300	Types B,	admiralty metals
C44400	C,	
C44500	D	
C60800	...	aluminum bronze
C68700	Type B	aluminum brass
C70600	...	90-10 copper-nickel
C71000	...	80-20 copper-nickel
C71500	...	70-30 copper-nickel

[A] The UNS system for copper and copper alloys (see Practice E 527) is a simple expansion of the former standard designation system accomplished by the addition of a prefix "C" and a suffix "00." The suffix can be used to accommodate composition variations of the base alloy.

[B] Designations listed in Classification B 224.

1.2 Warning — Mercury is a definite health hazard in use and disposal. (See 12.1.)

2. Referenced Documents

2.1 The following documents of the issue in effect on date of material purchase form a part of this specification to the extent referenced herein:

2.1.1 *ASTM Standards:*

B 153 Test Method for Expansion (Pin Test) of Copper and Copper-Alloy Pipe and Tubing

B 154 Test Method for Mercurous Nitrate Test for Copper and Copper Alloys

B 224 Classification of Coppers

B 601 Practice for Temper Designations for Copper and Copper Alloys — Wrought and Cast

E 8 Test Methods of Tension Testing of Metallic Materials

E 29 Practice for Using Significant Digits in Test Data to Determine Conformance with Specifications

E 53 Methods for Chemical Analysis of Copper

E 54 Test Methods for Chemical Analysis of Special Brasses and Bronzes

E 55 Practice for Sampling Wrought Nonferrous Metals and Alloys for Determination of Chemical Composition

E 62 Methods for Chemical Analysis of Copper and Copper Alloys (Photometric Methods)

E 75 Test Methods for Chemical Analysis of Copper-Nickel and Copper-Nickel-Zinc Alloys

E 112 Test Methods for Determining Average Grain Size

E 243 Practice for Electromagnetic (Eddy-Current) Examination of Copper and Copper-Alloy Tubes

E 478 Test Methods for Chemical Analysis of Copper Alloys

3. Terminology

3.1 *Descriptions of Terms Specific to This Standard:*

3.1.1 *capable of* — as used in this specification, the test need not be performed by the producer of the material. However, should subsequent testing by the purchaser establish that the material does not meet these requirements, the material shall be subject to rejection.

3.1.2 *U-Bend Tube* — a tube bent 180° in a single plane into a U-shape.

4. Ordering Information

4.1 Orders for U-bend tubes under this specification shall include the following information:

4.1.1 Material (Sections 5 and 6),

4.1.2 Temper (Section 7),

4.1.3 Whether the U-bent portion of copper-nickel U-bend tubes is to be relief annealed (see 7.4),

4.1.4 Dimensions: diameter and wall thickness of tube (see 14.1 and 14.2),

4.1.5 Schedule of tubes required in dual gage and length of heavy gage section (see 5.2 and 14.3),

4.1.6 Schedule of bending radii (see 14.5),

4.1.7 Length of U-bend tube legs (see 14.8),

4.1.8 Mill Test Report, if required (see 23).

4.1.9 If the product is to be subsequently welded (see Table 1, Footnote C).

5. Materials and Manufacture

5.1 The material shall be of such quality and purity that the finished product shall have the properties and characteristics prescribed in this specification.

5.2 Tubes required to be U-bent to a small radius shall, if specified, be furnished as dual gage tubes. These tubes shall be made prior to U-bending with the wall thickness of the central section of the tube length, thickened to the equivalent of one Stubs' or Birmingham Wire (Bwg) gage heavier than the wall thickness specified for the straight leg portion of the U-bend tube. Unless otherwise specified, dual gage tubes shall be made to constant inside diameter; that is, the increased wall thickness shall be obtained by increasing the outside diameter of the finished tube in the central heavy gage section.

5.3 The bent portion of the U-bend tube shall be substantially uniform in curvature.

6. Chemical Composition

6.1 The material shall conform to the chemical requirements specified in Table 1.

6.2 These specification limits do not preclude the presence of other elements. Limits for unnamed elements may be established by agreement between manufacturer or supplier and purchaser.

6.2.1 *Alloy C19200* — Copper may be taken as the difference between the sum of all the elements analyzed and 100 %. When all the elements in Table 1 are analyzed, their sum shall be 99.8 % minimum.

6.2.2 For copper alloys in which copper is specified as the remainder, copper may be taken as the difference between the sum of all the elements analyzed and 100 %.

6.2.2.1 When all the elements in Table 1 are analyzed, their sum shall be as shown in the following table.

Copper Alloy UNS No.	Copper Plus Named Elements, % min
C60800	99.5
C70600	99.5
C71000	99.5
C71500	99.5

6.2.3 For copper alloys in which zinc is specified as the remainder, either copper or zinc may be taken as the difference between the sum of all the elements analyzed and 100 %.

6.2.3.1 When all the elements in Table 1 are analyzed, their sum shall be as shown in the following table.

Copper Alloy UNS No.	Copper Plus Named Elements, % min
C23000	99.8
C44300	99.6
C44400	99.6
C44500	99.6
C68700	99.5

7. Temper (see Practice B 601)

7.1 Prior to U-bending, tubes of Copper Alloy UNS Nos. C23000, C44300, C44400, C44500, C60800, C68700, C70400, C70600, C71000, and C71500 shall be in the annealed temper (O61), unless otherwise specified in the purchase order.

7.2 Prior to bending, U-bend tubes of Copper Alloys UNS Nos. C10200, C12000, C12200, and C14200 shall normally be in light drawn temper (H55). Tubes of Copper Alloy UNS Nos. C70400 and C70600 shall, if specified, be made in the light-drawn temper (H55).

TABLE 1
CHEMICAL REQUIREMENTS

Copper Alloy No. UNS No.	Copper[A]	Tin	Alumi-num	Nickel (incl Cobalt)	Lead, max	Iron	Zinc	Manganese	Arsenic	Antimony	Phosphorus	Chromium	Other Named Ele-ments
C10200	99.95 min	...	...	...	...	...	...	...	...	...	...	...	...
C12000	99.90 min	...	...	...	...	...	...	...	...	...	0.004 to 0.012	...	...
C12200	99.9 min	...	...	...	...	...	...	...	...	...	0.015 to 0.040	...	...
C14200	99.40 min	...	...	...	...	...	...	...	0.15 to 0.50	...	0.015 to 0.040	...	...
C19200	98.7 min	...	...	...	...	0.8 to 1.2	...	...	...	...	0.01 to 0.04	...	...
C23000	84.0 to 86.0	...	...	...	0.05	0.05 max	remainder	...	...	...	...	...	...
C44300	70.0 to 73.0	0.9 to 1.2	...	...	0.07	0.06 max	remainder	...	0.02 to 0.06	...	...	...	...
C44400	70.0 to 73.0	0.9 to 1.2	...	...	0.07	0.06 max	remainder	...	...	0.02 to 0.10	...	...	...
C44500	70.0 to 73.0	0.9 to 1.2	...	...	0.07	0.06 max	remainder	...	...	...	0.02 to 0.10	...	...
C60800	remainder	...	5.0 to 6.5	...	0.10	0.10 max	...	...	0.02 to 0.35	...	...	...	...
C68700	76.0 to 79.0	...	1.8 to 2.5	...	0.07	0.06 max	remainder	...	0.02 to 0.06	...	...	...	...
C70600	remainder	...	...	9.0 to 11.0	0.05[C]	1.0 to 1.8	1.0 max[C]	1.0 max	...	...	...	[C]	[C]
C71000	remainder	...	...	19.0 to 23.0	0.05[C]	0.50 to 1.0	1.0 max[C]	1.0 max	...	...	[C]	...	[C]
C71500	remainder	...	...	29.0 to 33.0	0.05[C]	0.40 to 1.0	1.0 max[C]	1.0 max	...	...	...	...	[C]

[A] Silver counting as copper.
[B] Copper plus sum of named elements shall be 99.5%, min.
[C] When the product is for subsequent welding applications, and so specified by the purchaser, zinc shall be 0.50%, max, lead 0.02%, max, phosphorus 0.02%, max, sulfur 0.02%, max, and carbon 0.05%, max.

7.3 Prior to bending, U-bend tubes of Copper Alloys UNS No. C19200 shall normally be in the annealed (O61) or light drawn temper (H55) as specified.

7.4 Prior to bending, U-bend tubes of Copper Alloy UNS No. C71500 shall, if specified, be made in the drawn, stress-relieved temper (HR58).

7.5 The U-bend portion of tubes furnished in Copper Alloy UNS Nos. C23000, C44300, C44400, C44500, C60800, and C68700 shall be relief annealed (HR) after bending. If specified, the U-bend portion of tubes furnished in Copper Alloy UNS Nos. C70400, C70600, C71000, and C71500 shall be relief annealed (HR) after bending.

NOTE 1 — Some tubes, when subjected to aggressive environments, may be subject to stress-corrosion cracking failure because of the residual tensile stresses developed in straightening. For such applications, it is suggested that tubes of Alloys (C23000, C44300, C44400, C44500, C60800, and C68700) be subjected to a stress relieving (HR) thermal treatment subsequent to straightening.

8. Tensile Requirements

8.1 Material shall have tensile properties as prescribed in Table 3.

9. Microscopical Examination

9.1 Samples of annealed-temper (O61) tubes selected for test shall be subjected to microscopical examination at a magnification of 75 diameters and shall show uniform and complete recrystallization. Materials other than Copper Alloy UNS No. C19200 shall have an average grain size within the limits of 0.010 to 0.045 mm. The requirements of Section 7 do not apply to tubes of light-drawn (H55), drawn, stress-relieved (HR58) or to the U-bent portion.

10. Expansion Test

10.1 Tube specimens selected for test shall withstand the expansion shown in Table 2 when expanded in accordance with Test Method B 153. The expanded tube shall show no cracking or rupture visible to the unaided eye.

NOTE 2 — The term "unaided eye" as used herein permits the use of corrective spectacles necessary to obtain normal vision.

11. Flattening Test

11.1 Test specimens shall be flattened on at least three different elements throughout the lengths remaining after the specimens for the expanding and metallographic tests have been taken. For tube in the light-drawn (H55) and drawn, stress-relieved (HR58) tempers the specimens shall be annealed prior to flattening. Each element shall be slowly flattened by one stroke of a press. The length of each flattened element shall be at least 2 in. The term flattened shall be interpreted as follows: A micrometer caliper set at three times the wall thickness shall pass over the tube freely throughout the flattened part except at the points where the change in element of flattening takes place. The flattened elements shall not show cracking or rupture clearly visible to the unaided eye (Note 2).

12. Mercurous Nitrate Test

12.1 Warning — Mercury is a definite health hazard and therefore equipment for the detection and removal of mercury vapor produced in volatilization is recommended. The use of rubber gloves in testing is advisable.

12.2 A sufficient length of tube taken from each of the two sample lengths selected for test specimens shall be U-bent to the smallest radius in the order and shall be subjected to the same relief anneal (HR) treatment to be used for this size in producing the order. The test specimens, cut 6 in. in length from both the U-bend and straight leg length, shall stand without cracking, an immersion in the standard mercurous nitrate solution in Test Method B 154; the straight leg specimens shall include the finished tube ends. The mercurous nitrate test is required only for Copper Alloy UNS Nos. C23000, C44300, C44400, C44500, C60800, and C68700.

NOTE 3 — There is no standard test method to evaluate the effectiveness of a relief anneal (HR) of the U-bent section of copper-nickel or copper-nickel-iron tubes with respect to stress-corrosion cracking susceptibility.

13. Nondestructive Testing

13.1 *Eddy-Current Test:*

13.1.1 Each tube, prior to bending, shall be subjected to the eddy-current test. Tubes may be tested in the final drawn, annealed, or heat-treated temper or in the drawn temper prior to the final anneal or heat treatment unless otherwise agreed upon by the supplier and the purchaser.

13.1.2 Each tube shall be passed through an eddy-current testing unit adjusted to provide information on the suitability of the tube for the intended application. Testing shall follow the procedures of Practice E 243.

13.1.3 The depth of the round-bottom transverse notches and the diameters of the drilled holes in the calibrating tube used to adjust the sensitivity of the test unit are shown in Tables 8 and 9, respectively.

13.1.4 Tubes that do not actuate the signaling device of the eddy-current tester shall be considered as

TABLE 2
EXPANSION REQUIREMENTS

Temper Designation		Copper or Copper Alloy UNS No.	Expansion of Tube Outside Diameter in Percent of Original Outside Diameter
Standard	Former		
061	annealed	C19200	30
		C23000	20
		C44300, C44400, C44500	20
		C60800	20
		C68700	20
		C70600	30
		C71000	30
		C71500	30
H55	light-drawn	C10200, C12000, C12200	20
		C14200	20
HR58	drawn, stress relieved	C71500	20

TABLE 3
TENSILE REQUIREMENTS

Copper or Copper Alloy UNS No.	Temper Designation		Tensile Strength, min, ksi[B]	Yield Strength,[A] min, ksi[B]	Elongation in 2 in., min, %
	Standard	Former			
C10200, C12000, C12200, C14200	H55	light drawn	36	30	...
C19200	061	annealed	38	12	...
C23000	061	annealed	40	12	...
C44300, C44400, C44500	061	annealed	45	15	...
C60800	061	annealed	50	19	...
C68700	061	annealed	50	18	...
C70600	061	annealed	40	15	...
C71000	061	annealed	45	16	...
C71500	061	annealed	52	18	...
	HR58	drawn, stress relieved	72	50	...
For wall thicknesses up to 0.048 in., incl	...	...	...	...	12
For wall thicknesses over 0.048 in.	...	...	...	...	15

[A] At 0.5% extension under load.
[B] ksi = 1000 psi.

TABLE 4
DIAMETER TOLERANCES

Outside Diameter, in.	Wall Thickness, in.			
	0.032	0.035	0.042	0.049 and over
	Diameter Tolerance, plus and minus, in.			
Up to 0.500 incl	0.00025	0.0025	0.0025	0.0025
Over 0.500 to 0.740 incl	0.004	0.004	0.0035	0.003
Over 0.740 to 1.000 incl	0.006	0.005	0.0045	0.004
Over 1.000 to 1.250 incl	0.009	0.008	0.006	0.0045
Over 1.250 to 1.375 incl	...	...	0.008	0.005
Over 1.375 to 2.000 incl	...	...	...	0.006

conforming to the requirements of this test. Tubes causing irrelevant signals because of moisture, soil, and like effects may be reconditioned and retested. Such tubes, when retested to the original test parameters, shall be considered to conform if they do not cause output signals beyond the acceptable limits. Tubes causing irrelevant signals because of visible and identifiable handling marks shall be considered to conform if the tube dimensions are within the prescribed limits and if the tubes conform to the leak test requirements of 13.2.1.1 or 13.2.1.2, unless otherwise agreed to by the manufacturer and purchaser.

13.2 *Other Tests:*

13.2.1 Each U-Bend tube shall be tested to the requirements of 13.2.1.1 or 13.2.1.2. Unless otherwise specified, the manufacturer shall have the option of the leak test to be used.

13.2.1.1 *Hydrostatic Test* — Each tube shall stand, without showing evidence of leakage, an internal hydrostatic pressure sufficient to subject the material to a fiber stress of 7000 psi, determined by the following equation for thin hollow cylinders under tension. The tube need not be tested at a hydrostatic pressure of over a gage pressure of 1000 psi unless so specified.

$$P = 2St/(D - 0.8t)$$

where:

P = hydrostatic pressure, psi,
t = thickness of tube wall, in.,
D = outside diameter of the tube, in., and
S = allowable stress of the material, psi.

13.2.1.2 *Pneumatic Test* — Each tube shall be subject to an internal air gage pressure of 60 psi, minimum, for 5 s without showing evidence of leakage. The test method used shall permit easy visual detection of any leakage, such as by having the tube under water or by the pressure differential method. Any evidence of leakage shall be cause for rejection.

14. Dimensions, Weights, and Permissible Variations

14.1 *Tube Diameter* — The outside diameter of the straight leg portion of the tube, exclusive of the central heavy gage portion, shall not vary from that specified by more than the amounts shown in Table 4 as measured by "go" and "no-go" ring gages.

14.2 *Thickness:*

14.2.1 *Tubes Ordered to Minimum Wall* — Prior to U-bending the wall thickness of the single-gage tubes at the thinnest point shall not be less than the thickness specified. The maximum plus deviation from the specified wall at any point shall not exceed twice the value shown in Table 5.

TABLE 5
WALL THICKNESS TOLERANCES

	Outside Diameter, in.		
	over 1/8 to 5/8, incl	over 5/8 to 1, incl	over 1 to 2, incl
Wall Thickness, in.	Wall Thickness Tolerances, plus and minus in.		
0.032, incl to 0.035	0.003	0.003	0.004
0.035, incl to 0.058	0.004	0.0045	0.0045
0.058, incl to 0.083	0.0045	0.005	0.005
0.083, incl to 0.120	0.005	0.0065	0.0065
0.120, incl to 0.134	0.007	0.007	0.0075

NOTE 4 — The wall thickness of the heavy-gage section of dual-gage tube shall be determined by adding one half the difference between the outside diameter at the heavy gage and the outside diameter of the standard gage to the minimum measured wall thickness determined at either end of the tube.

14.2.2 *Tubes Ordered to Nominal Wall* — Prior to U-bending the maximum plus and minus deviation from the nominal wall at any point shall not exceed the values shown in Table 5. When tubes are required in dual gage, the wall thickness of the heavy gage portion, prior to U-bending, shall conform to the applicable tolerances in Table 5 for the specified heavier gage (Note 4).

14.3 *Wall Thickness of Tube in U-Bent Section* — The wall thickness of the tube at the apex of the U-bent section shall be not less than the value determined by the following equation:

$$t_f = t(2R)/(2R + D)$$

where:

t_f = thickness after bending, in.,
t = specified thickness of minimum wall or specified nominal wall minus the permissible wall thickness tolerance, in.,
R = centerline bend radius, in., and
D = nominal outside diameter of the tube, in.

Proof of conformance to this requirement shall be obtained by bending a tube specimen representative of the material offered to the scheduled radius of bend cutting the tube at the apex of the bend, measuring the tube wall at the cross section of this apex section, and comparing the measured value with the calculated value of t_f.

14.4 *Length of Central Heavy-Gage Section of Tube* — The nominal length of the heavy-gage section of the dual-gage tube prior to bending shall be as specified but in no

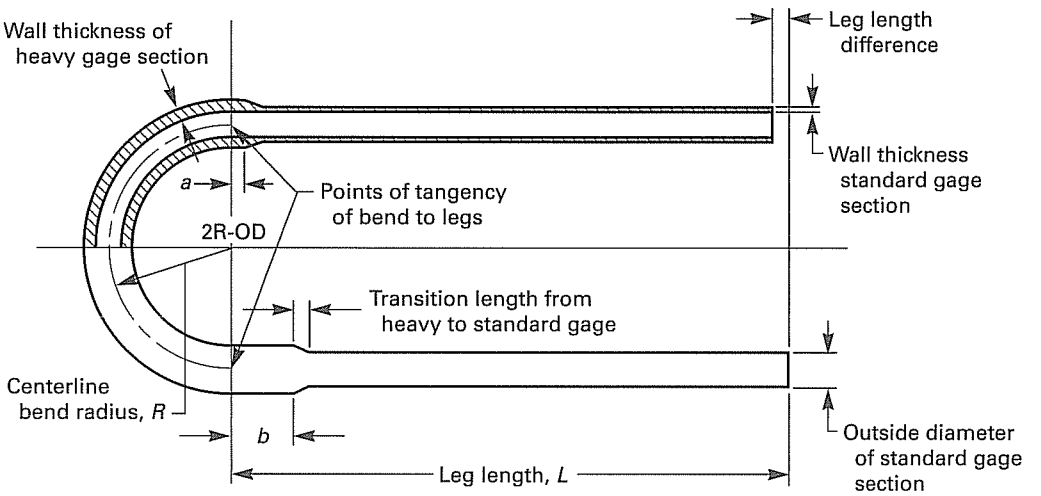

FIG. 1 CENTERING OF U-BEND IN HEAVY GAGE SECTION OF TUBE

case shall the length of the heavy-gage section be specified less than 4 in. nor less than the length of the bend measured along the centerline bend radius between the points of tangency. The tolerance on the length of the heavy gage section shall be plus 3 in., minus 0 in. The transition from the larger tube diameter of the heavy-gage section to the diameter of the tube in the standard-gage section shall be gradual and take place in a distance of not less than $^1/_8$ in. nor more than 1 in. measured parallel to the tube axis.

14.5 *Centering of U-Bend in Heavy-Gage Section of Tube* — U-bends in the dual-gage tube shall be centered substantially within the heavy-gage section of the tube. The heavy-gage section of the tube shall extend to or beyond the point of tangency, that is, the dimension *a* in Fig. 1 may be equal to or greater than 0 in. The difference (*b* - *a*) between the lengths of the heavy-gage section which extend beyond the point of tangency into the U-bend tube legs shall not exceed 1 in.

14.6 *Bending Radius (Note 6)* — The leg spacing, measured between the points of tangency of the bend to the legs shall not vary from the value (2*R* - specified tube outside diameter) by more than $^1/_{16}$ in. where *R* is the specified centerline bend radius (Note 5).

NOTE 5 — The higher tensile properties for Copper Alloy UNS No. C71500 in the drawn, stress-relieved temper (HR58) and Copper UNS Nos. C10200, C12000, C12200, and C14200 in the light-drawn temper (H55) are obtained with some sacrifice of ductility.

NOTE 6 — The radius of bend of tubes of C71500, in the drawn stress-relieved temper (HR58), shall not be less than 2.2 times the tube outside diameter for tubes with 0.049-in. wall, and not less than two times the tube outside diameter for tubes with 0.058 in. and thicker in wall.

TABLE 6
TUBE LEG TOLERANCES

Specified Length, (*L*) ft	Tolerance all plus, in.
Up to 20, incl	$^1/_8$
Over 20 to 30, incl	$^5/_{22}$
Over 30 to 60, incl	$^1/_4$
Over 60	$^3/_8$

14.7 *Diameter of Tube in U-Bend Section* — Neither the major, nor the minor outside diameter of the tube at any one cross section included within the points of tangency of the bend shall deviate from the nominal diameter prior to bending by more than 10 %.

14.8 *Length of U-Bend Tube Legs* — The length *L* in Fig. 1 of the tube legs as measured from the point of tangency of the bend and the tube leg to the end of the tube leg shall not be less than that specified when measured at a temperature of 68°F, but may exceed the specified values by the amounts shown in Table 6.

14.9 The difference in length of the tube legs shall not be greater than $^1/_8$ in. unless otherwise specified.

14.10 *Squareness of Cut* — The departure from squareness of the end of any tube shall not exceed the values given in Table 7.

15. Workmanship, Finish, and Appearance

15.1 Roundness, straightness, uniformity of the wall thickness, and inner and outer surface of the tube shall

TABLE 7
SQUARENESS TOLERANCES

Specified Outside Diameter, in.	Tolerance
Up to 5/8, incl	0.010 in.
Over 5/8	0.016 in./in.

TABLE 8
NOTCH DEPTH

Tube Wall Thickness, in.	Tube Outside Diameter, in. over 1/4 to 5/8, incl	in. over 5/8 to 3/4, incl	in. over 3/4 to 7/8, incl	in. over 7/8 to 1, incl
in.	Depth of Notch			
0.035	0.006	0.006	0.006	...
0.042	0.0065	0.0065	0.007	0.007
0.049	0.007	0.007	0.0075	0.0075
0.058	0.007	0.0075	0.0075	0.008
0.065	0.0075	0.0075	0.008	0.008
0.072	0.0075	0.0075	0.008	0.0085
0.083	0.0075	0.008	0.0085	0.009
0.095	...	0.008	0.0085	0.009
0.109	...	0.009	0.009	0.0095
0.120	...	...	0.010	0.010

Tube Wall Thickness	in. 1 to 1 1/4, incl	in. 1 1/4 to 1 1/2, incl	in. 1 1/2 to 1 3/4, incl	in. 1 3/4 to 2, incl
0.035	...	...	...	...
0.042	...	...	...	...
0.049	0.0075	0.008	...	...
0.058	0.008	0.0085	0.009	0.010
0.065	0.0085	0.009	0.010	0.0105
0.072	0.0085	0.009	0.010	0.011
0.083	0.009	0.0095	0.011	0.012
0.095	0.0095	0.010	0.0115	0.0125
0.109	0.010	0.011	0.012	0.013
0.120	0.011	0.0115	0.0125	0.014

TABLE 9
DIAMETER OF DRILLED HOLES

Tube Outside Diameter, in.	Diameter of Drilled Holes, in.	Drill No.
1/4 to 3/4, incl	0.025	72
Over 3/4 to 1, incl	0.031	68
Over 1 to 1 1/4, incl	0.036	64
Over 1 1/4 to 1 1/2, incl	0.042	58
Over 1 1/2 to 1 3/4, incl	0.046	56
Over 1 3/4 to 2, incl	0.052	55

TABLE 10
DENSITIES

Copper or Copper Alloy UNS No.	Density, lb/in.^{3}
C10200, C12000, C12200	0.323
C14200	0.323
C19200	0.32
C23000	0.316
C44300, C44400, C44500	0.308
C60800	0.295
C68700	0.301
C70600	0.323
C71000	0.323
C71500	0.323

be such as to make it suitable for intended application.

15.2 Annealed-temper (O61) tubes shall be clean and smooth, but may have a superficial, dull iridescent film on both the inside and outside surface. Drawn-temper tubes shall be clean and smooth, but may have a superficial film of drawing lubricant on the surfaces. A light oxide scale on the outside and inside surfaces of U-bend tubes shall be allowed for tubes which have been relief annealed.

16. Sampling

16.1 *Sampling* — The lot size, portion size, and selection of pieces shall be as follows:

16.1.1 *Lot Size* — For purposes of test, a lot shall consist of 600 tubes or fraction thereof for tubes whose lengths prior to U-bending are up to and including 45 ft or 300 tubes or fraction thereof for tubes whose lengths prior to U-bending are over 45 ft. As tubes intended for U-bending are of different lengths depending on the bending radius, a lot of tubes for sampling purposes may include tubes of different lengths. If any order includes tubes whose lengths prior to bending are both under and over 45 ft those tubes shall be divided into separate lots as noted above.

16.1.2 *Portion Size* — Pieces from two tubes selected from each lot prior to U-bending.

17. Number of Tests and Retests

17.1 *Chemical Analysis* — Samples for chemical analysis shall be taken in accordance with Practice E 55. Drillings, millings, etc., shall be taken in approximately equal weight from each of the sample pieces selected in accordance with 16.1.2 and combined into one composite sample. The minimum weight of the composite sample

that is to be divided into three equal parts shall be 150 g.

17.1.1 Instead of sampling in accordance with Practice E 55, the manufacturer shall have the option of determining conformance to chemical composition as follows: Conformance shall be determined by the manufacturer by analyzing samples taken at the time the castings are poured or samples taken from the semi-finished product. If the manufacturer determines the chemical composition of the material during the course of manufacture, he shall not be required to sample and analyze the finished product. The number of samples taken for determination of chemical composition shall be as follows:

17.1.1.1 When samples are taken at the time the castings are poured, at least one sample shall be taken for each group of castings poured simultaneously from the same source of molten metal.

17.1.1.2 When samples are taken from the semi-finished product, a sample shall be taken to represent each 10,000 lb or fraction thereof, except that not more than one sample shall be required per piece.

17.1.1.3 Due to the discontinuous nature of the processing of castings into wrought products, it is not practical to identify specific casting analysis with a specific quantity of finished material.

17.1.1.4 In the event that heat identification or traceability is required, the purchaser shall specify the details desired.

17.2 *Other Tests* — Two tubes shall be selected from each lot prior to U-bending and subjected to the tests specified in Sections 8 to 11, inclusive.

17.3 *Retests* — If any test specimen representing a lot fails to conform to the requirements of Sections 6, 9, 10, 11, and 13, when required, two additional specimens, at the option of the supplier, may be taken as before, and submitted for product analysis or subjected to any tests in which the original specimen failed, but each of these specimens shall conform to the requirements specified. Failure of either of these retest specimens to meet the specified requirements for a particular property shall be cause for rejection of the entire lot.

17.4 All U-bend tubes shall meet the requirements specified in 14.1 through 14.10.

18. Test Methods

18.1 The properties and chemical compositions enumerated in this specification shall, in case of disagreement, be determined in accordance with the following methods:

Test	ASTM Designation
Chemical analysis	E 53, E 54, E62, E 75, E 478
Grain size	E 112
Expansion (pin test)	B 153
Mercurous nitrate	B 154
Tension	E 8

18.2 The surface of the test specimen for microscopical examination shall approximate a radial longitudinal section of the tube.

18.3 Tubes selected for test shall be subjected to the tension test which shall, in case of disagreement, be made in accordance with Test Methods E 8. Tension test specimens shall be of the full section of the tube and shall conform to the requirements of the section, Specimens for Pipe and Tube, of Test Methods E 8, unless the limitations of the testing machine preclude the use of such a specimen. Test specimens conforming to Type No. 1 of Fig. 13, Tension Test Specimens for Large-Diameter Tubular Products, of Test Methods E 8, may be used when a full section specimen cannot be tested.

18.4 Whenever tension test results are obtained from both full-size and from machined specimens and they differ, the results obtained from full-sized test specimens shall be used to determine conformance to the specification requirements.

18.5 Tension test results on material covered by this specification are not seriously affected by variations in speed of testing. A considerable range of testing speed is permissible; however, the range of stressing to the yield strength should not exceed 100 ksi/min. Above the yield strength the movement per minute of the testing machine head under load should not exceed 0.5 in./in. of gage length (or distance between grips for full section specimens).

19. Significance of Numerical Limits

19.1 For purposes of determining compliance with the specified limits for requirements of the properties listed in the following table, an observed value or a calculated value shall be rounded as indicated in accordance with the rounding method of Practice E 29.

Property	Rounded Unit for Observed or Calculated Value
Chemical composition	nearest unit in the last right-hand place of figures
Tensile strength	nearest ksi (nearest 5 MPa)
Elongation	nearest 1%
Expansion	nearest 1%
Grain size	nearest multiple of 0.005 mm

20. Inspection

20.1 The manufacturer shall inspect and make necessary tests to verify that the tubes furnished conform to the requirements of this specification.

20.2 If in addition the purchaser elects to perform his own inspection, the manufacturer shall afford the inspector, without charge, all reasonable facilities to satisfy him that the tubes are being furnished in accordance with this specification. All tests (except product analysis) and inspection shall be made at the place of manufacture prior to shipment, unless otherwise specified, and shall be so conducted as not to interfere with the operation of the works. When automated finishing and inspection equipment is available at a facility, purchaser and supplier may by mutual agreement accomplish the final inspection simultaneously.

21. Rejection and Rehearing

21.1 Material that fails to conform to the requirements of this specification when inspected or tested by the purchaser or his agent may be rejected. Rejection should be reported to the manufacturer or supplier promptly and in writing. In case of dissatisfaction with the results of the test, the manufacturer or supplier may make claim for a rehearing.

22. Certification

22.1 The manufacturer shall furnish to the purchaser a certificate stating that each lot has been sampled, tested, and inspected in accordance with this specification and has met the requirements.

23. Mill Test Report

23.1 When specified on the purchase order, the manufacturer shall furnish to the purchaser a test report showing results of tests required by the specification.

24. Packaging and Package Marking

24.1 The material shall be separated by size, composition, and temper, and prepared for shipment in such a manner as to ensure acceptance by common carrier for transportation at the lowest rate applicable and to afford protection from the normal hazards of transportation.

24.2 Each shipping unit shall be legibly marked with the purchase order number, metal or alloy designation, temper, size, shape, total length or piece count, or both, and name of supplier. The specification number shall be shown, when specified.

SPECIFICATION FOR NICKEL-IRON-CHROMIUM ALLOY SEAMLESS PIPE AND TUBE

SB-407

(Identical with ASTM Specification B 407-96 except that certification has been made mandatory.)

1. Scope

1.1 This specification covers UNS N08120, UNS N08800, UNS N08801, UNS N08810, and UNS N08811 in the form of cold-worked and hot-finished annealed seamless pipe and tube. Alloy UNS N08800 is normally employed in service temperatures up to and including 1100°F (593°C). Alloys UNS N08120, UNS N08810, and UNS N08811 are normally employed in service temperatures above 1100°F (593°C) where resistance to creep and rupture is required, and they are annealed to develop controlled grain size for optimum properties in this temperature range.

1.2 The values stated in inch-pound units are to be regarded as the standard. The values given in parentheses are for information only.

1.3 The following safety hazards caveat pertains only to the test method portion, Section 13, of this specification. *This standard does not purport to address all of the safety concerns, if any, associated with its use. It is the responsibility of the user of this standard to establish appropriate safety and health practices and determine the applicability of regulatory limitations prior to use.*

2. Referenced Documents

2.1 *ASTM Standards:*

E 8 Methods of Tension Testing of Metallic Materials
E 18 Test Methods for Rockwell Hardness and Rockwell Superficial Hardness of Metallic Materials
E 29 Practice for Using Significant Digits in Test Data to Determine Conformance With Specifications
E 112 Methods for Determining Average Grain Size
E 140 Hardness Conversion Tables for Metals
E 426 Practice for Electromagnetic (Eddy-Current) Examination of Seamless and Welded Tubular Products, Austenitic Stainless Steel and Similar Alloys
E 571 Practice for Electromagnetic (Eddy-Current) Examination of Nickel and Nickel Alloy Tubular Products
E 1473 Test Methods for Chemical Analysis of Nickel, Cobalt, and High-Temperature Alloys

3. Terminology

3.1 *Definitions*

3.1.1 *average diameter, n* — average of the maximum and minimum outside diameters, or the maximum and minimum inside diameters, as determined at any one cross section of the tube.

3.1.2 *pipe, n* — seamless tube conforming to the particular dimensions commercially known as standard pipe sizes (see Table X1.1).

3.1.3 *tube, n* — hollow product of round or any other cross section having a continuous periphery.

4. Ordering Information

4.1 Orders for material to this specification shall include information with respect to the following:

4.1.1 *Alloy* (Table 1).

4.1.2 *Condition (Temper)* (Tables 2 and X1.1, and Appendices X2 and X3).

4.1.3 *Finish* (Tables X1.2 and X3.1).

4.1.4 *Dimensions:*

4.1.4.1 *Tube* — May be specified in two dimensions only (length excepted) as follows: Outside diameter and average or minimum wall, inside diameter and average wall, or outside diameter and inside diameter.

NOTE 1 — Tube produced to outside diameter and minimum wall may be furnished upon agreement between the manufacturer and the purchaser.

TABLE 1
CHEMICAL REQUIREMENTS

Element	Composition Limits, %			Product (Check) Analysis Variations, Under Min. or Over Max., of the Specified Limit		
	UNS N08120	UNS N08800, UNS N08810, and UNS N08811	UNS N08801	UNS N08120	UNS N08800, UNS N08810, and UNS N08811	UNS N08801
Nickel	35.0 min	30.0 min	30.0 min	0.30	0.25	0.25
	39.0 max	35.0 max	34.0 max	0.30	0.30	0.30
Chromium	23.0 min	19.0 min	19.0 min	0.25	0.25	0.25
	27.0 max	23.0 max	22.0 max	0.30	0.25	0.25
Iron	remainder	39.5 min[A]	39.5 min[A]	0.30	0.45	0.45
Manganese, max	1.5	1.5	1.5	0.04	0.04	0.04
Carbon	0.02 min	[B]	0.10 max	0.005	0.01	0.01
	0.10 max	...	...	0.01	...	...
Copper, max	0.5	0.75	0.5	0.03	0.04	0.03
Silicon, max	1.0	1.0	1.0	0.05	0.05	0.05
Sulfur, max	0.03	0.015	0.015	0.005	0.003	0.003
Aluminum[C]	0.40 max	0.15 min	...	0.05	0.05	...
	...	0.60 max	...	...	0.10	...
Titanium[C]	0.20 max	0.15 min	0.75 min	0.03	0.03	0.04
	...	0.60 max	1.50 max	...	0.04	0.05
Columbium	0.4 min	...	...	0.05	...	...
	0.9 max	...	...	0.05	...	...
Molybdenum	2.50 max	...	...	0.05	...	...
Phosphorus	0.040 max	...	...	0.005	...	...
Tungsten	2.50 max	...	...	0.10	...	...
Cobalt, max	3.0	...	...	0.05	...	...
Nitrogen	0.15 min	...	...	0.01	...	...
	0.30 max	...	...	0.03	...	...
Boron	0.010 max	...	...	0.002	...	...

[A] Iron shall be determined arithmetically by difference.
[B] Alloy UNS N08800: 0.10 max. Alloy UNS N08810: 0.05–0.10. Alloy UNS N08811: 0.06–0.10.
[C] Alloy UNS N08811: Al + Ti, 0.85–1.20.

4.1.4.2 *Pipe* — Standard pipe size and schedule (Table X1.1).

4.1.5 *Fabrication Details* — Not mandatory but helpful to the manufacturer:

4.1.5.1 *Cold Bending or Coiling.*

4.1.5.2 *Hot Forming.*

4.1.5.3 *Welding or Brazing* — Process to be employed.

4.1.5.4 *Pressure Requirements* — Test pressure if other than required by 7.3.

4.1.5.5 *Machining* — Indicate finished size and length in which to be machined and whether to be chucked to outside diameter or inside diameter.

4.1.5.6 *Ends* — Plain ends cut and deburred will be furnished. If threaded ends or ends beveled for welding are desired, give details (Section 16).

4.1.6 *Samples for Product (Check) Analysis* — State whether samples for product (check) analysis should be furnished (6.2).

4.1.7 *Purchaser Inspection* — If the purchaser wishes to witness tests or inspection of material at place of manufacture, the purchase order must so state indicating which tests or inspections are to be witnessed (Section 14).

4.1.8 *Small-Diameter and Light-Wall Tube* — (Converter Sizes) (Table X3.1).

4.1.9 *Optional Requirement* — Hydrostatic or Nondestructive Eddy Current Testing (see 7.3.3).

5. Materials and Manufacture

5.1 *Heat Treatment* — The final heat treatment of UNS N08120 shall be 2150°F (1177°C) minimum, UNS N08810, 2050°F (1121°C) minimum, and UNS N08811, 2100°F (1149°C) minimum.

6. Chemical Composition

6.1 The material shall conform to the composition limits specified in Table 1.

TABLE 2
MECHANICAL PROPERTIES[A, B] OF PIPE AND TUBE

Alloy	Condition (Temper)	Tensile Strength, min, psi (MPa)	Yield Strength, (0.2% offset), min, psi (MPa)	Elongation in 2 in. or 50 mm (or 4D), min, %
UNS N08120	hot-finished annealed, or cold-worked annealed	90 000 (621)	40 000 (276)	30
UNS N08800	cold-worked annealed	75 000 (520)	30 000 (205)	30
UNS N08800	hot-finished annealed, or hot-finished	65 000 (450)	25 000 (170)	30
UNS N08810 and UNS N08811	hot-finished annealed, or cold-worked annealed	65 000 (450)	25 000 (170)	30
UNS N08801	hot-finished annealed, or cold-worked annealed	65 000 (450)	25 000 (170)	30

[A] For properties of small-diameter and light-wall tubing, see Table X1.1.
[B] See 12.3.

6.2 If a product (check) analysis is performed by the purchaser, the material shall conform to the product (check) analysis variations in Table 1.

7. Mechanical Properties and Other Requirements

7.1 *Mechanical Properties* — The material shall conform to the mechanical properties specified in Table 2.

7.2 *Grain Size* — Annealed UNS Alloys N08120, N08810, and N08811 shall conform to an average grain size of ASTM No. 5 or coarser.

7.3 *Hydrostatic Test:*

7.3.1 Each pipe or tube with an outside diameter $\frac{1}{8}$ in. (3.2 mm) and larger, and tubes with wall thickness of 0.015 in. (0.38 mm) and over shall be tested by the manufacturer to an internal hydrostatic pressure of 1000 psi (6.9 MPa) provided that the fiber stress calculated in accordance with the following equation does not exceed the allowable fiber stress, S, indicated below. The pipe or tube shall show no evidence of leakage.

$$P = 2St/D$$

where:

P = hydrostatic test pressure, psi (MPa),
S = allowable fiber stresses, for material in the condition, as follows:

Cold-drawn annealed or hot-finished annealed alloy UNS N08120	22,500 psi (155 MPa)
Cold-drawn annealed alloy UNS N08800	18,700 psi (130 MPa)
Hot-finished as hot-finished, or hot-finished annealed alloy UNS N08800	16,600 psi (115 MPa)
Cold-drawn annealed or hot-finished annealed alloys UNS N08810, UNS N08811 and UNS N08801	16,600 psi (115 MPa)

t = minimum wall thickness, in. (mm), equal to the specified average wall minus the permissible minus wall tolerance, Table 3, or the specified minimum wall thickness, and
D = outside diameter of the tube, in. (mm)

7.3.2 When so agreed upon between the manufacturer and purchaser, pipe or tube may be tested to $1\frac{1}{2}$ times the allowable fiber stress given in 7.3.1.

7.3.3 Each pipe or tube shall be subjected to the hydrostatic test, or, in lieu of this test, a nondestructive eddy current test may be used at the manufacturer's option. If eddy current testing is used, the following test method would apply:

7.3.3.1 *Eddy-Current Testing* — Testing shall be conducted in accordance with Practice E 426 or E 571. The eddy-current examination referenced in this specification has the capability of detecting significant discontinuities, especially of the short abrupt type.

(1) Unless otherwise specified, the calibration standard shall contain, at the option of the manufacturer, any one of the following discontinuities to establish a minimum sensitivity level for rejection. The discontinuity shall be placed in the weld if visible.

(2) Drilled Hole — A hole not larger than 0.031 in. (0.79 mm) in diameter shall be drilled radially and completely through the wall, care being taken to avoid distortion of the material while drilling.

(3) Transverse Tangential Notch — Using a round file or tool with a $\frac{1}{4}$ in. (6 mm) diameter, a notch shall be filed or milled on the tube outside diameter tangential to the surface and transverse to the longitudinal axis of the material. Said notch shall have a depth not exceeding $12\frac{1}{2}\%$ of the specified wall thickness of the material, or 0.004 in. (0.10 mm), whichever is greater.

7.3.3.2 *Calibration Frequency* — The frequency of calibration checks shall be as follows:

(1) At the beginning of each production run or lot.
(2) After every 4 h or less during testing.
(3) At the end of each production run or lot.

(4) At any time malfunctioning is suspected, or the equipment has been left unattended.

(5) If, during any check, the equipment fails to pick up the standard defects in the calibration standard, the instrument test must be recalibrated and all material tested since the last check shall be reexamined.

7.3.3.3 *Acceptance and Rejection* — Material producing a signal equal to or greater than the calibration imperfection shall be subject to rejection.

(1) Test signals produced by imperfections that cannot be identified or produced by cracks or crack-like imperfections shall result in rejection of the tube, subject to rework, and retest.

(2) If the imperfection is judged as not fit for use, the tube shall be rejected, but may be reconditioned and retested providing the dimensions requirements are met. To be accepted, retested material shall meet the original electric test requirements.

(3) If the imperfection is explored to the extent that it can be identified and the pipe or tube is determined to be fit for use, the material may be accepted without further test providing the imperfection does not encroach on the minimum wall thickness.

7.4 *Annealing Temperature* — Alloy UNS N08120 shall be annealed at 2150°F (1177°C) minimum, and alloy UNS N08810 at 2050°F (1120°C) minimum.

8. Dimensions and Permissible Variations

8.1 *Diameter and Wall Thickness:*

8.1.1 The permissible variations in the outside and inside diameter and wall thickness of pipe and tube shall not exceed those prescribed in Tables 3 and X3.1, as applicable.

8.1.2 Permissible variations given in Tables 3 and X3.1 are applicable only to two dimensions. Thus, if outside diameter and wall are specified, the inside diameter may not conform to the permissible variations shown. Similarly, if outside diameter and inside diameter are specified, the wall may not conform to the permissible variations shown.

8.2 *Length* — When pipe or tube is ordered cut-to-length, the length shall not be less than that specified, but a variation of + $\frac{1}{8}$ in. (3.2 mm) will be permitted for cold-worked material and + $\frac{3}{16}$ in. (4.8 mm) for hot-finished tube, except that for lengths over 30 ft (9.1 m), a variation of + $\frac{1}{4}$ in. (6.4 mm) will be permitted. For small-diameter and light-wall tube, material shall conform to the applicable requirements of Table X3.1.

8.3 *Straightness* — Cold-drawn material shall be reasonably straight and free of bends and kinks. For small-diameter and light-wall tube, material shall conform to the applicable requirements of Table X3.1. The camber (depth of chord) of hot-finished tube 5 in. (127 mm) in outside diameter and under shall not exceed 0.01 in./ft (0.8mm/m). For sizes over 5 in. in outside diameter, the camber shall not exceed 0.015 in./ft (1.4 mm/m).

9. Workmanship, Finish, and Appearance

9.1 The material shall be uniform in quality and temper, smooth, commercially straight, and free of injurious imperfections.

10. Sampling

10.1 *Lot:*

10.1.1 A lot for chemical analysis shall consist of one heat.

10.1.2 A lot for mechanical properties and grain size testing shall consist of all material from the same heat, nominal size (excepting length), and condition (temper).

10.1.2.1 Where material cannot be identified by heat, a lot shall consist of not more than 500 lb (227 kg) of material in the same condition (temper) and nominal size (excepting length).

10.2 *Test Material Selection:*

10.2.1 *Chemical Analysis* — Representative samples shall be taken during pouring or subsequent processing.

10.2.1.1 Product (check) analysis shall be wholly the responsibility of the purchaser.

10.2.2 *Mechanical Properties and Grain Size* — Samples of the material to provide test specimens for mechanical properties and grain size shall be taken from such locations in each lot as to be representative of that lot.

11. Number of Tests

11.1 *Chemical Analysis* — One test per lot.

11.2 *Mechanical Properties* — One test per lot.

11.3 *Grain Size* — One test per lot.

11.4 *Hydrostatic or Eddy Current* — Each piece per lot.

12. Specimen Preparation

12.1 Tension test specimens shall be taken from material in the final condition (temper) and tested in the direction of fabrication.

TABLE 3
PERMISSIBLE VARIATIONS IN OUTSIDE AND INSIDE DIAMETER AND WALL THICKNESS (AVERAGE WALL)

Specified Outside Diameter or Calculated Nominal Outside Diameter (When Ordered to Inside Diameter and Average Wall)	Permissible Variations			
	Outside Diameter or Inside Diameter		Wall Thickness, %	
	+	-	+	-
Cold-Finished[A, B, C, D] Pipe and Tube				
Inches				
0.500 to 5/8, excl	0.005	0.005	15.0	15.0
5/8 to 1 1/2, incl	0.0075	0.0075	10.0	10.0
Over 1 1/2 to 3 1/2, incl	0.010	0.010	10.0	10.0
Over 3 1/2 to 4 1/2, incl	0.015	0.015	10.0	10.0
Over 4 1/2 to 6, incl	0.020	0.020	12.5	12.5
Over 6 to 6 5/8, incl	0.025	0.025	12.5	12.5
Millimetres				
12.7 to 15.8, excl	0.127	0.127	15.0	15.0
15.8 to 38.1, incl	0.190	0.190	10.0	10.0
Over 38.1 to 88.9, incl	0.254	0.254	10.0	10.0
Over 88.9 to 114.3, incl	0.381	0.381	10.0	10.0
Over 114.3 to 152.4, incl	0.508	0.508	12.5	12.5
Over 152.4 to 168.3, incl	0.635	0.635	12.5	12.5
Hot-Finished Tube[E, F, G, H]				
Inches				
2 1/2 to 5 1/2, excl	0.031	0.031	12.5	12.5
5 1/2 to 9 1/4, incl	0.047	0.047	12.5	12.5
Millimetres				
63.5 to 139.7, excl	0.787	0.787	12.5	12.5
139.7 to 234.9, incl	1.19	1.19	12.5	12.5

[A] The permissible variations in this table apply to individual measurements, including out-of-roundness (ovality), except for the following conditions.

1) Thin-Wall Pipe and Tube—For thin-wall pipe and tube having a nominal wall thickness of 3% or less of the nominal outside diameter, in all conditions (temper), the mean outside diameter or mean inside diameter shall conform to the permissible variations of this table, and individual measurements (including ovality) shall conform to the plus and minus values of this table, with the values increased by 0.5% of the nominal outside diameter.

2) Annealed Pipe and Tube Over 4 1/2 *in.* (114.3 *mm*) *in Nominal Outside Diameter*—For annealed pipe and tubing over 4 1/2 in. (114.3 mm) in nominal outside diameter with a nominal wall thickness greater than 3% of the nominal outside diameter, the mean outside diameter or mean inside diameter shall conform to the permissible variations of this table, and individual measurements shall not exceed twice the permissible variations of this table.

[B] For pipe and tube, in all tempers, with an inside diameter of less than 1/2 in. (12.70 mm) which cannot be successfully drawn over a mandrel, the inside diameter shall be governed by the outside diameter and the wall thickness variations.

[C] For pipe and tube in all tempers with an inside diameter less than 50% of the outside diameter, which cannot be successfully drawn over a mandrel, the inside diameter may vary over or under by an amount equal to 10% of the nominal wall thickness and the wall thickness may vary ±15%.

[D] *Eccentricity*—The variation in wall thickness in any one cross section of any one cold-finished pipe or tube shall not exceed ±10% of the actual (measured) average wall of that section (defined as the average of the thickest and the thinnest wall in that section).

[E] For tube 5 in. (127.0 mm) and under in outside diameter the tolerance on the outside diameter applies for individual measurements and includes ovality. For tubes over 5 in. (127.0 mm) in outside diameter the mean outside diameter shall conform to the permissible variations of this table and individual measurements shall not exceed twice the permissible variations of this table.

[F] The diameter tolerances for tube with machined outside and inside diameters shall be +0.031 in. (0.787 mm), −0 for the outside diameter and +0, −0.062 in. (1.57 mm) for the inside diameter.

[G] If tube is specified as minimum wall, the tolerance shall be +28.5%, −0.

[H] The wall thickness tolerance includes eccentricity tolerance up to ±12.5%.

12.2 Whenever possible, all pipe and tube shall be tested in full tubular size. When testing in full tubular size is not possible, longitudinal strip specimens, or the largest possible round specimen, shall be used. In the event of disagreement when full tubular testing is not possible, a longitudinal strip specimen with reduced gage length as contained in Methods E 8 shall be used.

13. Test Methods

13.1 The chemical composition, mechanical, and other properties of the material as enumerated in this specification shall be determined, in case of disagreement, in accordance with the following methods:

Test Method	ASTM Designation
Chemical Analysis	E 1473
Tension	E 8
Rounding Procedure	E 29
Rockwell Hardness	E 18
Grain Size	E 112
Hardness Conversion	E 140

13.2 The measurement of average grain size may be carried out by the planimetric method, the comparison method, or the intercept method described in Method E 112. In case of dispute the "referee" method for determining average grain size shall be the planimetric method.

13.3 For purposes of determining compliance with the specified limits for requirements of the properties listed in the following table, an observed value or a calculated value shall be rounded as indicated below, in accordance with the rounding method of Recommended Practice E 29.

Test	Rounded Unit for Observed or Calculated Value
Chemical composition hardness, and tolerances (when expressed in decimals)	nearest unit in the last right-hand place of figures of the specified limit
Tensile strength, yield strength	nearest 1000 psi (6.9 MPa)
Elongation	nearest 1%
Grain size:	
0.0024 in. (0.060 mm) or larger	nearest multiple of 0.0002 in. (0.005 mm)
less than 0.0024 in. (0.060 mm)	nearest multiple of 0.0001 in. (0.002 mm)

14. Inspection

14.1 Inspection of the material shall be made as agreed upon between the manufacturer and the purchaser as part of the purchase contract.

15. Rejection and Rehearing

15.1 Material not conforming to this specification or to authorized modifications will be subject to rejection.

15.2 Samples tested in accordance with this specification that represent rejected material shall be preserved for not less than 3 weeks from the date of the test report. In case of dissatisfaction with the results of the tests, the manufacturer may make claim for a rehearing within that time.

16. Certification

16.1 A manufacturer's certification that material has been manufactured and tested in accordance with this specification together with a report of the test results shall be furnished.

17. Product and Package Marking

17.1 *Product Marking* — The name or brand of the manufacturer, the trade name of the material or UNS number, the letters ASTM, the specification number, heat number, and nominal size shall be legibly marked on each piece $\frac{3}{4}$ in. (19.1 mm) and over in outside diameter, provided the length is not under 3 ft (914 mm). The material marking shall be by any method that will not result in harmful contamination.

17.1.1 For material less than $\frac{3}{4}$ in. (19.1 mm) in outside diameter and material under 3 ft (914 mm) in length, the information in 17.1 shall be either stenciled or marked on a tag securely attached to the bundle or box in which the material is shipped.

17.2 *Package Marking* — Each bundle or shipping container shall be marked with the name or brand of the manufacturer, the trade name of the material or UNS number, the letters ASTM, the specification number, heat number, condition and nominal size, net weight, consignor and consignee address, contract or order number, or other such information as may be defined in the contract or order.

18. Keywords

18.1 seamless pipe; seamless tube; UNS N08120; UNS N08800; UNS N08801; UNS N08810; UNS N08811

APPENDIXES

(Nonmandatory Information)

X1. SCHEDULES OF COLD-DRAWN, SEAMLESS NICKEL-IRON-CHROMIUM ALLOY PIPE

X1.1 The schedules of cold-worked, seamless nickel-iron-chromium alloy pipe as given in Table X1.2 are regularly available. Other schedules may be furnished, and the manufacturer should be consulted. Table X1.2 is published for information only.

X2. CONDITIONS AND FINISHES NORMALLY SUPPLIED

X2.1 This appendix lists the condition and finishes in which pipe and tube (other than converter sizes) are normally supplied. These are subject to change and the manufacturer should be consulted for the latest information available.

X2.2 *Cold-Finished Tube and Pipe:*

X2.2.1 *Cold-Finished, Annealed, With Ground Outside Diameter* — The inside diameter may have a bright finish when material is annealed in a protective atmosphere; otherwise, the inside diameter is supplied descaled as necessary. Available in sizes ½ to 4 in. (12.7 to 102 mm), inclusive, in outside diameter in both normal and heavy-wall tube, and pipe sizes, all schedules, of corresponding outside diameter dimensions.

X2.2.2 *Cold-Finished, Annealed, and Pickled (Not Ground)* — Outside and inside diameter will have dull, matte (pickled) surfaces. Available in sizes ½ to 6⅝ in. (12.7 to 168 mm) inclusive, in outside diameter in both normal and heavy-wall tube, and pipe sizes, all schedules, of corresponding outside diameter dimensions.

X2.3 *Hot-Finished Tube:*

X2.3.1 *Hot-Finished, or Hot-Finished Annealed, (Not Pickled) Tube* — Has an oxide surface resulting from the hot-finishing operation. Intended generally for machined parts where the oxide surface will be removed.

X2.3.2 *Hot-Finished, or Hot-Finished Annealed, (Pickled) Tube* — Has the oxide surface removed on both the outside and inside diameters by pickling. Surface may be spot ground for removal of minor surface imperfections at the manufacturer's option.

X2.3.3 *Hot-Finished, or Hot-Finished Annealed, (Machined Outside and Inside Diameters) Tube* — The outside and inside diameter surfaces are machined to

TABLE X1.1
MECHANICAL PROPERTIES[A] OF SMALL-DIAMETER AND LIGHT-WALL TUBING (CONVERTER SIZES) (ALLOY UNS N08800)

Material	Tensile Strength, min, psi (MPa)	Yield Strength (0.2% offset),[B] min, psi (MPa)	Elongation in 2 in. or 50 mm, min, %	Rockwell Hardness[C] (or Equivalent)
Annealed[D, E]	75 000 to 100 000 (520 to 690)	30 000 (205)	30	B 95 max
Half-hard[F]	105 000 (725)	60 000 (415)	13	B 93 to C 26
Full-hard[G]	130 000 (895)	105 000 (725)	4	C 24 to C 38

[A] Not applicable to outside diameters under ⅛ in. (3.18 mm) and to wall thickness under 0.015 in. (0.381 mm).
[B] See 12.3.
[C] Hardness values, indicative of tensile strength, are shown for information only. All tests are subject to confirmation by tension tests. For hardness conversions see Hardness Conversion Tables E 140.
[D] This condition is sometimes designated as "No. 1 Temper."
[E] The minimum tensile strength value applies only to tubing in straight lengths.
[F] This condition is sometimes designated as "No. 2 Temper."
[G] This condition is sometimes designated as "No. 3 Temper."

TABLE X1.2
PIPE SCHEDULES[A]

Nominal Pipe Size	Outside Diameter	Nominal Wall Thickness			
		Schedule No. 5	Schedule No. 10	Schedule No. 40	Schedule No. 80
		Inches			
1/4	0.540	...	0.065	0.088	...
3/8	0.675	...	0.065	0.091	0.126
1/2	0.840	0.065	0.083	0.109	0.147
3/4	1.050	0.065	0.083	0.113	0.154
1	1.315	0.065	0.109	0.133	0.179
1 1/4	1.660	0.065	0.109	0.140	0.191
1 1/2	1.900	0.065	0.109	0.145	0.200
2	2.375	0.065	0.109	0.154	0.218
2 1/2	2.875	0.083	0.120	0.203	0.276
3	3.500	0.083	0.120	0.216	0.300
3 1/2	4.000	0.083	0.120	0.226	0.318
4	4.500	0.083	0.120	0.237	0.337
5	5.563	...	...	0.258	...
6	6.625	...	...	0.280	...
		Millimetres			
6.35	13.72	...	1.65	2.24	...
9.52	17.14	...	1.65	2.31	3.20
12.70	21.34	1.65	2.11	2.77	3.73
19.05	26.67	1.65	2.11	2.87	3.91
25.4	33.40	1.65	2.77	3.38	4.55
31.8	42.16	1.65	2.77	3.56	4.85
38.1	48.26	1.65	2.77	3.68	5.08
50.8	60.32	1.65	2.77	3.91	5.54
63.5	73.02	2.11	3.05	5.16	7.04
76.2	88.90	2.11	3.05	5.49	7.62
88.9	101.60	2.11	3.05	5.74	8.08
101.6	114.30	2.11	3.05	6.02	8.56
127.0	141.30	...	...	6.55	...
152.4	168.28	...	...	7.11	...

[A] The pipe schedules shown above conform with standards adopted by the American National Standards Institute.

specified dimensions. Minor surface imperfections may be spot ground for removal, at the manufacturer's option.

X3. CONVERTER SIZES [ALLOY (UNS N08800) ONLY]

X3.1 Small diameter and light-wall tube in outside diameters 1 1/4 in. (31.8 mm) and under may be furnished in the following conditions or tempers shown in Tables X1.1 and X3.1 when so specified. The material is furnished in a limited range of sizes and the manufacturer should be consulted as to the various outside diameters and wall thicknesses that may be furnished. Material will have a bright finish. Such material shall conform to the applicable requirements for the conditions indicated in Tables X1.1 and X3.1.

TABLE X3.1
PERMISSIBLE VARIATIONS FOR SMALL-DIAMETER AND LIGHT-WALL TUBE (CONVERTER SIZES)[A, B, C, D, E, F, G, H]

Specified Outside Diameter	Outside Diameter		Inside Diameter		Wall Thickness, %	
	+	-	+	-	+	-
	Inches					
Under 3/32	0.002	0	0	0.002	10	10
3/32 to 3/16 (0.1875), excl	0.003	0	0	0.003	10	10
3/16 to 1/2 (0.500), excl	0.004	0	0	0.004	10	10
1/2 to 1 1/4 (1.250), incl	0.005	0	0	0.005	10	10
	Millimetres					
Under 2.38	0.051	0	0	0.051	10	10
2.38 to 4.76, excl	0.076	0	0	0.076	10	10
4.76 to 12.70, excl	0.102	0	0	0.102	10	10
12.70 to 31.8, incl	0.127	0	0	0.127	10	10

[A] Ovality, Normal Wall Tube:

Annealed (No. 1) Temper — Ovality will be held within 2% of the theoretical average outside diameter.

[B] Ovality, Light-Wall Tube:

Annealed (No. 1) Temper — Ovality will be held within 3% of the theoretical average outside diameter.

[C] *Wall Tolerances, Light-Wall Tube*—The plus and minus wall tolerance shown in the table shall apply down to and including 0.005 in. (0.12 mm) in wall thickness. For wall thicknesses less than 0.005 in. (0.1 mm) the tolerance shall be ±0.0005 in. (0.0127 mm).

[D] *Random Lengths:*

Where nominal random lengths on tubing 1/8 in. (3.18 mm) and larger in outside diameter are specified, a length tolerance of ±3 1/2 ft (106 cm) applies to the nominal length. This is a total spread of 7 ft (210 cm).

Random lengths in sizes 1/8 in. (3.18 mm) and larger in outside diameter shall be subject to a length range of 5 to 24 ft (150 to 730 cm). Long random lengths are subject to a range of 15 to 22 ft (457 to 670 cm).

Random lengths in sizes up to, but not including 1/8 in. (3.18 mm) in outside diameter, and fragile light-wall tubes over this outside diameter are subject to the length range of 1 to 15 ft (30 to 457 cm).

[E] *Cut lengths* — Tolerances on cut lengths shall be as follows:

Length, ft	Tube Size, in.	Permissible Variations, in. Over	Under
Under 1	up to 1.250, incl	1/32	0
1 to 4, incl	up to 1.250, incl	1/16	0
Over 4 to 10, incl	up to 1.250, incl	3/32	0
Over 10	up to 1.250, incl	3/16	0

Length, cm	Tube Size, mm	Permissible Variations, mm Over	Under
Under 30	up to 31.75, incl	0.794	0
30 to 122, incl	up to 31.75, incl	1.59	0
Over 122 to 300, incl	up to 31.75, incl	2.38	0
Over 300	up to 31.75, incl	4.76	0

[F] *Straightness*—Round tubing is subject to a straightness tolerance of one part in 600 [equivalent to a depth of arc of 0.030 in. (0.762 mm) in any 3 ft (91 cm) of length].

[G] *Eccentricity*—Eccentricity as defined in Table 3, Footnote *D* shall be limited to ±10% of the specified wall or calculated average wall.

[H] When specified, the tolerance spreads of this table may be applied as desired. However, when not specified, the tolerances in this table will apply. It should be noted that inside diameter tolerances are based upon the outside diameter range.

SPECIFICATION FOR NICKEL-IRON-CHROMIUM ALLOY ROD AND BAR

SB-408

(Identical with ASTM Specification B 408-96 except for the deletion of hot-worked, as-hot-worked, and forging quality conditions. Certification has been made mandatory.)

1. Scope

1.1 This specification covers UNS N08120, UNS N08800, UNS N08810, and UNS N08811 in the form of hot-worked and cold-worked rod and bar. Alloy UNS N08800 is normally employed in service temperatures up to and including 1100°F (593°C). Alloys UNS N08120, UNS N08810, and UNS N08811 are normally employed in service temperatures above 1100°F (593°C) where resistance to creep and rupture is required, and they are annealed to develop controlled grain size for optimum properties in this temperature range.

1.2 The values stated in inch-pound units are to be regarded as the standard. The values given in parentheses are for information only.

2. Referenced Documents

2.1 *ASTM Standards:*

E 8 Test Methods for Tension Testing of Metallic Materials

E 29 Practice for Using Significant Digits in Test Data to Determine Conformance With Specifications

E 112 Test Methods for Determining the Average Grain Size

E 1473 Test Methods for Chemical Analysis of Nickel, Cobalt, and High-Temperature Alloys

3. Terminology

3.1 *Descriptions of Terms Specific to This Standard*

3.1.1 *bar* — material of rectangular (flats), hexagonal, or square solid section up to and including 10 in. (254 mm) in width and $\frac{1}{8}$ in. (3.2 mm) and over in thickness in straight lengths.

DISCUSSION — Hot-worked rectangular bar in widths 10 in. (254 mm) and under may be furnished as hot-rolled plate with sheared or cut edges in accordance with Specification B 408, provided the mechanical property requirements of Specification B 408 are met.

3.1.2 *rod* — material of round solid section furnished in straight lengths.

4. Ordering Information

4.1 Orders for material to this specification shall include information with respect to the following:

4.1.1 ASTM designation, and year of issue,

4.1.2 Alloy designation or UNS number,

4.1.3 Section — Rod (round) or bar (square, hexagonal, or rectangular),

4.1.4 Dimensions — Dimensions including length (Section 8, Tables 3 to 6 incl),

4.1.5 Condition (Table 1 and Appendix X1),

4.1.6 Finish (X1),

4.1.7 Quantity (feet or number of pieces),

4.1.8 Certification — Certification and a report of test results are required (Section 16),

4.1.9 Samples for Product (Check) Analysis — State whether samples for product (check) analysis should be furnished.

4.1.10 Purchaser Inspection — If purchaser wishes to witness tests or inspection of material at place of manufacture, the purchase order must so state indicating which test or inspections are to be witnessed.

5. Materials and Manufacture

5.1 *Heat Treatment* — The final heat treatment of UNS N08120 shall be 2150°F (1177°C) minimum, UNS

TABLE 1
MECHANICAL PROPERTIES OF RODS AND BARS

Alloy	Condition	Tensile Strength, min, psi (MPa)	Yield Strength (0.2 % offset) min, psi (MPa)	Elongation in 2 in. or 50 mm (or 4D), min, %
UNS N08120	Cold-worked and hot-worked, annealed	90 000 (621)	40 000 (276)	30
UNS N08800	Hot worked, as-hot-worked	80 000 (550)	35 000 (240)	25[A]
	Cold-worked and hot-worked, annealed	75 000 (515)	30 000 (205)	30
UNS N08810 and UNS N08811	Cold-worked and hot-worked, annealed	65 000 (450)	25 000 (170)	30
UNS N08800, UNS N08810, and UNS N08811	Forging quality	[B]	[B]	[B]

[A] For hot-worked as-hot-worked rectangular bar $^5/_{16}$ in. (7.94 mm) and under in thickness the elongation shall be 20% min.
[B] Forging quality is furnished to chemical requirements and surface inspection only. No tensile properties are required.

N08810, 2050°F (1121°C) minimum, and UNS N08811, 2100°F (1149°C) minimum.

6. Chemical Composition

6.1 The material shall conform to the composition limits specified in Table 2.

6.2 If a product (check) analysis is performed by the purchaser, the material shall conform to the product (check) analysis variations in Table 2.

7. Mechanical Properties and Other Requirements

7.1 *Mechanical Properties* — The material shall conform to the mechanical properties specified in Table 1.

7.2 *Grain Size* — Annealed UNS Alloys N08120, N08810, and N08811 shall conform to an average grain size of ASTM No. 5 or coarser.

8. Dimensons and Permissible Variations

8.1 *Diameter, Thickness, or Width* — The permissible variations from the specified dimensions as measured on the diameter or between parallel surfaces of cold-worked rod and bar shall be as prescribed in Table 3, and of hot-worked rod and bar as prescribed in Table 4.

8.2 *Out-of-Round* — Hot worked rods and cold-worked rods (except "forging quality") all sizes, in straight lengths, shall not be out-of-round by more than one half the total permissible variations in diameter shown in Tables 3 and 4, except for hot-worked rods ½ in. (12.7 mm) in diameter and under, which may be out-of-round by the total permissible variations in diameter shown in Table 4.

8.3 *Corners* — Cold-worked bars will have practically exact angles and sharp corners.

8.4 *Machining Allowance for Hot-Worked Materials* — When the surfaces of hot-worked products are to be machined, the allowances prescribed in Table 5 are recommended for normal machining operations.

8.5 *Length* — The permissible variations in length of cold-worked and hot-worked rod and bar shall be as prescribed in Table 6.

8.5.1 Rods and bars ordered to random or nominal lengths will be furnished with either cropped or saw-cut ends; materials ordered to cut lengths will be furnished with square saw-cut or machined ends.

8.6 *Straightness:*

8.6.1 The permissible variations in straightness of cold-worked rod and bar as determined by the departure from straightness shall be as prescribed in Table 7.

8.6.2 The permissible variations in straightness of hot-worked rod and bar as determined by the departure from straightness shall be as specified in Table 8.

9. Workmanship, Finish, and Appearance

9.1 The material shall be uniform in quality and condition, smooth, commercially straight or flat, and free of injurious imperfections.

10. Sampling

10.1 *Lot:*

10.1.1 A lot for chemical analysis shall consist of one heat.

10.1.2 A lot for mechanical properties and grain size testing shall consist of all material from the same

TABLE 2
CHEMICAL REQUIREMENTS[†]

Element	Composition Limits, % Alloy N08120	Alloy N08800	Alloy N08810	Alloy N08811	Product (Check) Analysis Variations, under min or over max, of the Specified Limit of Element Alloy N08120	Product (Check) Analysis Variations, under min or over max, of the Specified Limit of Element Alloys N08800, N08810, and N08811
Nickel	35.0 min	30.0 min	30.0 min	30.0 min	0.30	0.25
	39.0 max	35.0 max	35.0 max	35.0 max	0.30	0.30
Chromium	23.0 min	19.0 min	19.0 min	19.0 min	0.25	0.25
	27.0 max	23.0 max	23.0 max	23.0 max	0.30	0.25
Iron	remainder	39.5 min[A]	39.5 min[A]	39.5 min[A]	0.30	0.45
Manganese, max	1.5	1.5	1.5	1.5	0.04	0.04
Carbon	0.02 min	0.10 max	0.05 to 0.10	0.06 to 0.10	0.005	0.01
	0.10 max	...	...	...	0.01	...
Copper, max	0.50	0.75	0.75	0.75	0.03	0.04
Silicon, max	1.0	1.0	1.0	1.0	0.05	0.05
Sulfur, max	0.03	0.015	0.015	0.015	0.005	0.003
Aluminum[B]	0.040 max	0.15 min	0.15 min	0.15 min	0.05	0.05
	...	0.60 max	0.60 max	0.60 max	...	0.10
Titanium[B]	0.20 max	0.15 min	0.15 min	0.15 min	0.03	0.03
	...	0.60 max	0.60 max	0.60 max	...	0.04
Columbium	0.4 min	...	...	...	0.05	...
	0.9 max	...	...	...	0.05	...
Molybdenum	2.50 max	...	...	...	0.05	...
Phosphorous	0.040 max	...	...	...	0.005	...
Tungsten	2.50 max	...	...	...	0.10	...
Cobalt, max	3.0	...	...	...	0.05	...
Nitrogen	0.15 min	...	...	...	0.01	...
	0.30 max	...	...	...	0.03	...
Boron	0.010 max	...	...	...	0.002	...

[A] Iron shall be determined arithmetically by difference.
[B] Alloy UNS N08811: Al + Ti, 0.85–1.20.
[†] Editorially corrected.

TABLE 3
PERMISSIBLE VARIATIONS IN DIAMETER OR DISTANCE
BETWEEN PARALLEL SURFACES OF COLD-WORKED ROD AND BAR

Specified Dimension, in. (mm)[A]	Permissible Variations from Specified Dimension, in. (mm) +	−
Rounds:		
1/16 (1.6) to 3/16 (4.8), excl	0	0.002 (0.05)
3/16 (4.8) to 1/2 (12.7), excl	0	0.003 (0.08)
1/2 (12.7) to 15/16 (23.8), incl	0.001 (0.03)	0.002 (0.05)
Over 15/16 (23.8) to 1 15/16 (49.2), incl	0.0015 (0.04)	0.003 (0.08)
Over 1 15/16 (49.2) to 2 1/2 (63.5), incl	0.002 (0.05)	0.004 (0.10)
Hexagons, squares, rectangles:		
1/2 (12.7) and less	0	0.004 (0.10)
Over 1/2 (12.7) to 7/8 (22.2), incl	0	0.005 (0.13)
Over 7/8 (22.2) to 1 1/4 (31.8), incl	0	0.007 (0.18)
Over 1 1/4 (31.8) to 2 (50.8), incl	0	0.009 (0.23)

[A] Dimensions apply to diameter of rounds, to distance between parallel surfaces of hexagons and squares, and separately to width and thickness of rectangles.

TABLE 4
PERMISSIBLE VARIATIONS IN DIAMETER OR DISTANCE

Specified Dimension, in. (mm)[A]	Permissible Variations from Specified Dimensions, in. (mm)	
	+	−
Rod and bar, hot-worked:		
1 (25.4) and under	0.016 (0.41)	0.016 (0.41)
Over 1 (25.4) to 2 (50.8), incl	0.031 (0.79)	0.016 (0.41)
Over 2 (50.8) to 4 (101.6), incl	0.047 (1.19)	0.031 (0.79)
Over 4 (101.6)	0.125 (3.18)	0.063 (1.60)
Rod, rough turned or ground:		
Under 1 (25.4)	0.005 (0.13)	0.005 (0.13)
1 (25.4) and over	0.031 (0.79)	0
Forging quality rod:[B]		
Under 1 (25.4)	0.005 (0.13)	0.005 (0.13)
1 (25.4) and over	0.031 (0.79)	0

[A] Dimensions apply to diameter of rods, to distance between parallel surfaces of hexagons and squares,and separately to width and thickness of rectangles.

[B] Spot grinding is permitted to remove minor surface imperfections. The depth of these spot ground areas shall not exceed 3% of the diameter of the rod.

TABLE 5
NORMAL MACHINING ALLOWANCES FOR HOT-WORKED MATERIAL

Finished-Machined Dimensions for Finishes as Indicated Below, in. (mm)[A]	Normal Machining Allowance, in. (mm)			
	On Diameter, for Rods	Distance Between Parallel Surfaces, for Hexagonal and Square Bar	For Rectangular Bar	
			On Thickness	On Width
Hot-worked:[B]				
Up to 7/8 (22.2), incl	1/8 (3.2)	1/8 (3.2)	1/8 (3.2)	3/16 (4.8)
Over 7/8 to 1 7/8 (22.2 to 47.6), incl	1/8 (3.2)	3/16 (4.8)	1/8 (3.2)	3/16 (4.8)
Over 1 7/8 to 2 7/8 (47.6 to 73.0), incl	3/16 (4.8)	1/4 (6.4)	...	3/16 (4.8)
Over 2 7/8 to 3 13/16 (73.0 to 96.8), incl	1/4 (6.4)	...	...	3/16 (4.8)
Over 3 13/16 (96.8)	1/4 (6.4)	...	...	3/8 (9.5)
Hot-worked rods:				
Rough-turned or Rough Ground:[C]				
15/16 to 4 (23.8 to 101.6), incl in diameter	1/16 (1.6)	...	...	...
Over 4 to 12 (101.6 to 304.8), incl in diameter	1/8 (3.2)	...	...	...

[A] Dimensions apply to diameter of rods, to distance between parallel surfaces of hexagonal and square bar, and separately to width and thickness of rectangular bar.

[B] The allowances for hot-worked material in Table 5 are recommended for rods machined in lengths of 3 ft (0.91 m) or less and for bars machined in lengths of 2 ft (0.61 m) or less. Hot-worked material to be machined in longer lengths should be specified showing the finished cross-sectional dimension and the length in which the material will be machined in order that the manufacturer may supply material with sufficient oversize, including allowance for out-of-straightness.

[C] Applicable to 3 ft (0.91 m) max length.

heat, nominal diameter or thickness, and condition.

10.1.2.1 Where material cannot be identified by heat, a lot shall consist of not more than 500 lb (227 kg) of material in the same size and condition except that a single peice weighing over 500 lbs shall be considered as one lot.

10.2 *Test Material Selection:*

10.2.1 *Chemical Analysis* — Representative samples from each lot shall be taken during pouring or subsequent processing.

10.2.1.1 Product (check) analysis shall be wholly the responsibility of the purchaser.

TABLE 6
PERMISSIBLE VARIATIONS IN LENGTH OF RODS AND BARS

Random mill lengths:	
Hot-worked	6 to 24 ft (1.83 to 7.31 m) long with not more than 25 weight % between 6 and 9 ft (1.83 and 2.74 m)[A]
Cold-worked	6 to 20 ft (1.83 to 6.1 m) long with not more than 25 weight % between 6 and 10 ft (1.83 and 3.05 m)
Multiple lengths	furnished in multiples of a specified unit length, within the length limits indicated above. For each multiple, an allowance of 1/4 in. (6.4 mm) will be made for cutting, unless otherwise specified. At the manufacturer's option, individual specified unit lengths may be furnished.
Nominal lengths	specified nominal lengths having a range of not less than 2 ft (610 mm) with no short lengths allowed[B]
Cut lengths	a specified length to which all rods and bars will be cut with a permissible variation of plus 1/8 in. (3.2 mm), minus 0 for sizes 8 in. (203 mm) and less in diameter or distance between parallel surfaces. For larger sizes, the permissible variation shall be + 1/4 in. (6.4 mm), − 0.

[A] For hot-worked sections weighing over 25 lb/ft (37 kg/m) and for smooth forged products, all sections, short lengths down to 2 ft (610 mm) may be furnished.

[B] For cold-worked rods and bars under 1/2 in. (12.7 mm) in diameter or distance between parallel surfaces ordered to nominal or stock lengths with a 2-ft (610-mm) range, at least 93% of such material shall be within the range specified; the balance may be in shorter lengths but in no case shall lengths less than 4 ft (1220 mm) be furnished.

TABLE 7
PERMISSIBLE VARIATIONS IN STRAIGHTNESS
OF COLD-WORKED RODS AND BARS

Specified Diameter or Distance Between Parallel Surfaces, in. (mm)[A]	Depth of Chord, Permissible Variations in Lengths Indicated, in. (mm)
Rounds:	
1/2 (12.7) to 2 1/2 (63.5), incl	0.030 (0.76) per ft (305 mm) of length
Hexagons, squares, rectangles:	
1/2 (12.7) to 2 (50.8), incl	0.030 (0.76) per ft (305 mm) of length

[A] Material under 1/2 in. (12.7 mm) shall be reasonably straight and free of sharp bends and kinks.

TABLE 8
PERMISSIBLE VARIATIONS IN STRAIGHTNESS
OF HOT-WORKED RODS AND BARS[A]

Finish	Permissible Variations, in./ft. (mm/m)[B]
Rods and bars, hot-worked	0.050 (4.2)[C]
Rounds: hot-worked, rough ground, or rough turned	0.050 (4.2)[C]

[A] Not applicable to forging quality.

[B] Material under 1/2 in. (12.7 mm) shall be reasonably straight and free of sharp bends and kinks.

[C] The maximum curvature (depth of chord) shall not exceed the values indicated multiplied by the length in feet.

10.2.2 Mechanical Properties and Grain Size — Samples of the material to provide test specimens for mechanical properties shall be taken from such locations in each lot as to be representative of that lot.

11. Number of Tests

11.1 *Chemical Analysis* — One test per lot.

11.2 *Tension* — One test per lot.

11.3 *Grain Size* — One test per lot.

12. Specimen Preparation

12.1 Tension test specimens shall be taken from material in the final condition and tested in the direction of fabrication.

12.1.1 All rod and bar shall be tested in full cross-section size when possible. When a full cross-section size test cannot be performed, the largest possible round specimen shown in Test Methods E 8 shall be used.

Longitudinal strip specimens shall be prepared in accordance with Test Methods E 8 for rectangular bar up to ½ in. (12.7 mm), inclusive, in thicknesses which are too wide to be pulled full size.

13. Test Method

13.1 The chemical composition, mechanical, and other properties of the material as enumerated in this specification shall be determined, in case of disagreement, in accordance with the following methods:

Test	ASTM Designation
Chemical analysis	E 1473
Tension	E 8
Rounding Procedure	E 29
Grain size	E 112

13.2 In the event of disagreement, the referee method for the determination of average grain size shall be the planimetric method.

13.3 For purposes of determining compliance with the specified limits for requirements of the properties listed in the following table, an observed value or a calculated value shall be rounded as indicated below, in accordance with the rounding method of Practice E 29.

Test	Rounded Unit for Observed or Calculated Value
Chemical composition, hardness, and tolerances (when expressed in decimals)	Nearest unit in the last right-hand place of figures of the specified limit. If two choices are possible, as when the digits dropped are exactly a 5, or a 5 followed only by zeros, choose the one ending in an even digit, with zero defined as an even digit.
Tensile strength and yield strength	Nearest 1000 psi (6.9 MPa)
Elongation	Nearest 1%

14. Inspection

14.1 Inspection of the material shall be made as agreed upon between the manufacturer and the purchaser as part of the purchase contract.

15. Rejection and Rehearing

15.1 Material, tested by the purchaser, that fails to conform to the requirements of this specification may be rejected. Rejection should be reported to the producer or supplier promptly and in writing. In case of dissatisfaction with the results of the test, the producer or supplier may make claim for a rehearing.

16. Certification

16.1 A manufacturer's certification shall be furnished to the purchaser stating the material has been manufactured, tested, and inspected in accordance with this specification, and that the test results on representative samples meet specification requirements. A report of the test results shall be furnished.

17. Product Marking

17.1 The following information shall be marked on the material or included on the package, or on a label or tag attached thereto: The name of the material or UNS number, heat number, condition (temper), this specification number, date of issue, the size, gross, tare and net weight, consignor and consignee address; contract or order number, or such other information as may be defined in the contract or order.

18. Keywords

18.1 bar; rod; UNS N08120; UNS N08800; UNS N08801; UNS N08810; UNS N08811

APPENDIX

(Nonmandatory Information)

XI. PROCURABLE CONDITIONS AND FINISHES

X1.1 The various conditions and finishes in which rod and bar are procurable are as follows:

X1.1.1 *Hot-Worked* — With a tightly adherent, dark oxide surface.

X1.1.2 *Hot-Worked, Rough Ground* — Similar to X1.1.1 except rough ground.

X1.1.3 *Hot-Worked, Rough Turned* — Similar to X1.1.1 except rough turned with a broad nosed tool similar to a bar peeling operation and thus may not be straight. Intended generally for machining where an overhauled surface is desired, essentially for machined step down shafts or parts machined in short lengths of 3 ft (0.91 m) or less.

X1.1.4 *Hot-Worked, Forging Quality* — Rough turned and spot ground, as necessary, for sizes 1 in. (25.4 mm) in diameter and over; rough ground and spot ground for sizes under 1 in. in diameter. Material is selected from heats of known, good hot malleability.

NOTE XI — For sizes 2½ in. (63.5 mm) in diameter and less, cold-worked rod may be used also for forging by virtue of the fact such rod have been overhauled for removal of mechanical surface defects prior to cold-working. In such cases, the user should run pilot forging tests to ensure himself that such material has the desired hot malleability range.

X1.1.5 *Hot-Worked, Annealed* — Soft, with a tightly adherent dark oxide.

X1.1.6 *Hot-Worked, Annealed and Pickled* — Same as X1.1.5 except descaled for removal of mill oxide. Provides for better surface inspection than does hot-worked material and often employed where welding is involved where removal of mill oxide is desired.

NOTE X2 — Annealing prior to pickling may be required in order to reduce the mill oxide since uniform pickling of an unreduced oxide is difficult.

X1.1.7 *Cold-Worked, As Worked* — Hot-worked, overhauled, cold worked, and straightened with a smooth, bright finish.

X1.1.8 *Cold-Worked, Annealed and Pickled* — Hot-worked, overhauled, cold-worked, annealed, descaled, and straightened. Annealed for softness and with a dull matte finish.

SPECIFICATION FOR NICKEL-IRON-CHROMIUM ALLOY PLATE, SHEET, AND STRIP

SB-409

(Identical with ASTM Specification B 409-96a except that certification has been made mandatory.)

1. Scope

1.1 This specification covers UNS N08120, UNS N08800, UNS N08810, and UNS N08811 in the form of rolled plate, sheet, and strip. Alloy UNS N08800 is normally employed in service temperatures up to and including 1100°F (593°C). Alloys UNS N08120, UNS N08810, and UNS N08811 are normally employed in service temperatures above 1100°F (593°C) where resistance to creep and rupture is required, and they are annealed to develop controlled grain size for optimum properties in this temperature range.

1.2 The values stated in inch-pound units are to be regarded as the standard. The values given in parentheses are for information only.

2. Referenced Documents

2.1 *ASTM Standards:*

B 408 Specification for Nickel-Iron-Chromium Alloy Rod and Bar

E 8 Test Methods for Tension Testing of Metallic Materials

E 10 Test Method for Brinell Hardness of Metallic Materials

E 18 Test Methods for Rockwell Hardness and Rockwell Superficial Hardness of Metallic Materials

E 29 Practice for Using Significant Digits in Test Data to Determine Conformance With Specifications

E 112 Test Methods for Determining the Average Grain Size

E 140 Hardness Conversion Tables for Metals

E 1473 Test Methods for Chemical Analysis of Nickel, Cobalt, and High-Temperature Alloys

F 155 Test Method for Temper of Strip and Sheet Metals for Electronic Devices (Spring-Back Method)

3. Terminology

3.1 *Descriptions of Terms Specific to This Standard:* The terms given in Table 1 shall apply.

4. Ordering Information

4.1 Orders for material to this specification should include information with respect to the following:

4.1.1 *Alloy* (Table 2).

4.1.2 *Condition (Temper)* — Tables 3 and 4, and Appendix X1.

4.1.3 *Finish* — Appendix X1.

4.1.4 *Dimensions* — Thickness, width, and length.

4.1.5 *Optional Requirements:*

4.1.5.1 *Sheet and Strip* — Whether to be furnished in coil, in cut straight lengths, or in random straight lengths.

4.1.5.2 *Strip* — Whether to be furnished with commercial slit edge, square edge, or round edge.

4.1.5.3 *Plate* — Whether to be furnished specially flattened (see 8.7.2); also how plate is to be cut (Tables 5 and 6).

4.1.6 *Fabrication Details* — Not mandatory but helpful to the manufacturer:

4.1.6.1 *Welding or Brazing* — Process to be employed.

4.1.6.2 *Plate* — Whether material is to be hot-formed.

4.1.7 *Certification* — Certification and a report of test results are required (Section 16).

4.1.8 *Samples for Product (Check) Analysis* — Whether samples for product (check) analysis should be furnished (see 6.2).

TABLE 1
PRODUCT DESCRIPTION

Product	Thickness, in. (mm)	Width, in. (mm)
Hot-rolled plate[A]	3/16 and over (Tables 7 and 8)	(Table 5)[C]
Hot-rolled sheet[A]	0.018 to 0.250 (0.46 to 6.4), incl (Table 9)	(Table 11)
Cold-rolled sheet[B]	0.018 to 0.250 (0.46 to 6.4), incl (Table 9)	(Table 11)
Cold-rolled strip[B]	0.005 to 0.250 (0.13 to 6.4), incl (Table 9)	(Table 11)

[A] Material 3/16 to 1/4 in. (4.8 to 6.4 mm), incl, in thickness may be furnished as sheet or plate provided the material meets the specification requirements for the condition ordered.

[B] Material under 48 in. (1219 mm) in width may be furnished as sheet or strip provided the material meets the specification requirements for the condition ordered.

[C] Hot-rolled plate, in widths 10 in. (254 mm) and under, may be furnished as hot-finished rectangles with sheared or cut edges in accordance with Specification B 408, provided the mechanical property requirements of this specification are met.

TABLE 2
CHEMICAL REQUIREMENTS

Element	Composition Limit, %		Product (Check) Analysis Variations, under min or over max, of the Specified Limit of Element Alloy N08120	Product (Check) Analysis Variations, under min or over max, of the Specified Limit of Element Alloys N08800, N08810, and N08811
	Alloy N08120	Alloys N08800, N08810, and N08811		
Nickel	35.0 min	30.0 min	0.30	0.25
	39.0 max	35.0 max	0.30	0.30
Chromium	23.0 min	19.0 min	0.25	0.25
	27.0 max	23.0 max	0.30	0.25
Iron	balance[A]	39.5 min[A]	0.30	0.45
Manganese, max	1.5	1.5	0.04	0.04†
Carbon	0.02 min	[B]	0.005	0.01†
	0.10 max	...	0.01	...
Copper, max	0.50	0.75	0.03	0.04
Silicon, max	1.0	1.0	0.05	0.05
Sulfur, max	0.03	0.015	0.005	0.003
Aluminum[C]	0.40 max	0.15 min	0.05	0.05
	...	0.60 max	...	0.10
Titanium[C]	0.20 max	0.15 min	0.03	0.03
	...	0.60 max	...	0.04
Columbium	0.4 min	...	0.05	...
	0.9 max	...	0.05	...
Molybdenum	2.50 max	...	0.05	...
Phosphorus	0.040 max	...	0.005	...
Tungsten	2.50 max	...	0.10	...
Cobalt, max	3.0	...	0.05	...
Nitrogen	0.15 min	...	0.01	...
	0.30 max	...	0.03	...
Boron	0.010 max	...	0.002	...

[A] Iron shall be determined arithmetically by difference.

[B] Alloy UNS N08800: 0.10 max
Alloy UNS N08810: 0.05–0.10.
Alloy UNS N08811: 0.06–0.10.

[C] Alloy UNS N08811: Al + Ti, 0.85–1.20.

† Editorially corrected.

TABLE 3
MECHANICAL PROPERTIES FOR PLATE, SHEET, AND STRIP
(ALL THICKNESSES AND SIZES UNLESS OTHERWISE INDICATED)

Alloy	Condition	Tensile Strength, min, psi (MPa)	Yield Strength[A] (0.2% offset), min, psi (MPa)	Elongation in 2 in. or 50 mm (or 4D), min, %
		Hot-Rolled Plate		
UNS N08120	Annealed	90 000 (621)	40 000 (276)	30
UNS N08800	Annealed	75 000 (520)	30 000 (205)	30
UNS N08800	As-rolled[B,C]	80 000 (550)	35 000 (240)	25
UNS N08810	Annealed	65 000 (450)	25 000 (170)	30
UNS N08811	Annealed	65 000 (450)	25 000 (170)	30
		Hot-Rolled Sheet		
UNS N08120	Annealed	90 000 (621)	40 000 (276)	30
UNS N08800	Annealed	75 000 (520)	30 000 (205)	30
UNS N08810[D]	Annealed	65 000 (450)	25 000 (170)	30
UNS N08811[D]	Annealed	65 000 (450)	25 000 (170)	30
		Cold-Rolled Sheet		
UNS N08120	Annealed	90 000 (621)	40 000 (276)	30
UNS N08800	Annealed	75 000 (520)	30 000 (205)	30
UNS N08810[D]	Annealed	65 000 (450)	25 000 (170)	30
UNS N08811[D]	Annealed	65 000 (450)	25 000 (170)	30
		Cold-Rolled Strip		
UNS N08120	Annealed	90 000 (621)	40 000 (276)	30
UNS N08800	Annealed	75 000 (520)	30 000 (205)	30[E]
UNS N08810[D]	Annealed	65 000 (450)	25 000 (170)	30
UNS N08811[D]	Annealed	65 000 (450)	25 000 (170)	30

[A] Yield strength requirements do not apply to material under 0.020 in. (0.51 mm) in thickness.
[B] As-rolled plate may be given a stress-relieving heat treatment subsequent to final rolling.
[C] As-rolled plate specified "suitable for hot forming" shall be furnished from heats of known good hot-malleability characteristics (see X1.1.1.2). The purchaser must specify Alloy UNS N08800 or UNS N08810. There are no applicable tensile or hardness requirements for such material.
[D] Available only in thicknesses 0.115 in. (2.92 mm) and over.
[E] Not applicable for thickness under 0.010 in. (0.25 mm).

4.1.9 *Purchaser Inspection* — If purchaser wishes to witness tests or inspection of material at place of manufacture, the purchase order must so state indicating which tests or inspections are to be witnessed (Section 14).

5. Materials and Manufacture

5.1 *Heat Treatment* — The final heat treatment of UNS N08120 shall be 2150°F (1177°C) minimum, UNS N08810, 2050°F (1121°C) minimum, and UNS N08811, 2100°F (1149°C) minimum.

6. Chemical Composition

6.1 The material shall conform to the composition limits specified in Table 2.

6.2 If a product (check) analysis is performed by the purchaser, the material shall conform to the product (check) analysis variations in Table 2.

7. Mechanical and Other Requirements

7.1 *Mechanical Properties* — The material shall conform to the mechanical properties specified in Table 3.

7.2 *Grain Size* — Annealed Alloys UNS N08120, UNS N08810, and UNS N08811 shall conform to an average grain size of ASTM No. 5 or coarser.

7.3 *Deep-Drawing and Spinning Quality Sheet and Strip* — (Alloy UNS N08800). Shall conform to the grain size and hardness requirements as provided in Table 4.

TABLE 4
GRAIN SIZE AND HARDNESS FOR ALLOY UNS N08800 COLD-ROLLED, DEEP-DRAWING, AND SPINNING QUALITY SHEET AND STRIP

Thickness, in. (mm)	Calculated Diameter of Average Grain Section, max, in. (mm)	Corresponding ASTM Micro-Grain Size No.	Rockwell B[A,B] Hardness, max
Sheet [56 in. (1.42 m) Wide and Under]			
0.050 (1.3) and less	0.0030 (0.075)	4.5	86
Over 0.050 to 0.250 (1.3 to 6.4), incl	0.0043 (0.110)	3.5	86
Strip [12 in. (305 mm) Wide and Under][C]			
0.005[D] to 0.010 (0.13 to 0.25), incl	0.0009 (0.022)	8[E]	88[E]
Over 0.010 to 0.125 (0.25 to 3.2), incl	0.0030 (0.075)	4.5	86

[A] For Rockwell or equivalent hardness conversions see Hardness Conversion Tables E 140.
[B] Caution should be observed in using the Rockwell test on thin material, as the results may be affected by specimen thickness. For thickness under 0.050 in. (1.3 mm), the use of the Rockwell superficial or the Vickers hardness test is suggested.
[C] Sheet requirements (above) apply to strip thicknesses over 0.125 in. (3.2 mm), and for all thicknesses of strip over 12 in. (305 mm) in width.
[D] For ductility evaluations for strip under 0.005 in. (0.13 mm) in thickness, the springback test such as described in Test Method F 155, is often used and the manufacturer should be consulted.
[E] Accurate grain size and hardness determinations are difficult to make on strip under 0.005 in. (0.13 mm) in thickness and are not recommended.

7.3.1 The mechanical properties of Table 3 do not apply to deep-drawing and spinning quality sheet and strip.

7.4 *Annealing Temperature* — Alloy UNS N08120 shall be annealed at 2150°F (1177°C) minimum, and UNS N08810, 2050°F (1145°C) minimum.

8. Dimensions and Permissible Variations

8.1 *Thickness and Weight:*

8.1.1 *Plate* — For plate up to 2 in. (50.8 mm), incl, in thickness, the permissible variation under the specified thickness and permissible excess in overweight shall not exceed the amounts prescribed in Table 7.

8.1.1.1 For use with Table 7, plate shall be assumed to weigh 0.287 lb/in.^{3} (7.944 g/cm^3).

8.1.2 *Plate* — For plate over 2 in. (50.8 mm) in thickness, the permissible variations over the specified thickness shall not exceed the amounts prescribed in Table 8.

8.1.3 *Sheet and Strip* — The permissible variations in thickness of sheet and strip shall be as prescribed in Table 9. The thickness of sheet and strip shall be measured with the micrometer spindle $\frac{3}{8}$ in. (9.5 mm) or more from either edge for material 1 in. (25.4 mm) or over in width and at any place on strip under 1 in. in width.

8.2 *Width or Diameter:*

8.2.1 *Plate* — The permissible variations in width of rectangular plates and diameter of circular plates shall be as prescribed in Tables 5 and 10.

8.2.2 *Sheet and Strip* — The permissible variations in width for sheet and strip shall be as prescribed in Table 11.

8.3 *Length:*

8.3.1 Sheet and strip of all sizes may be ordered to cut lengths, in which case a variation of $\frac{1}{8}$ in. (3.18 mm) over the specified length shall be permitted.

8.3.2 Permissible variations in length of rectangular plate shall be as prescribed in Table 6.

8.4 *Straightness:*

8.4.1 The edgewise curvature (depth of chord) of flat sheet, strip, and plate shall not exceed 0.05 in. multiplied by the length in feet (0.04 mm multiplied by the length in centimetres).

8.4.2 Straightness for coiled strip material is subject to agreement between the manufacturer and the purchaser.

8.5 *Edges:*

8.5.1 When finished edges of strip are specified in the contract or order, the following descriptions shall apply:

TABLE 5
PERMISSIBLE VARIATIONS IN WIDTH[A] OF SHEARED, PLASMA-TORCH-CUT, AND ABRASIVE-CUT RECTANGULAR PLATE[B,C]

Specified Thickness	Permissible Variations in Widths for Widths Given, in. (mm)									
	Up to 30 (760), incl		Over 30 to 72 (760 to 1830), incl		Over 72 to 108 (1830 to 2740), incl		Over 108 to 144 (2740 to 3660), incl		Over 144 to 160 (3660 to 4070), incl	
	+	−	+	−	+	−	+	−	+	−
Inches										
Sheared: [D]										
3/16 to 5/16, excl	3/16	1/8	1/4	1/8	3/8	1/8	1/2	1/8	...	...
5/16 to 1/2, excl	1/4	1/8	3/8	1/8	3/8	1/8	1/2	1/8	5/8	1/8
1/2 to 3/4, excl	3/8	1/8	3/8	1/8	1/2	1/8	5/8	1/8	3/4	1/8
3/4 to 1, excl	1/2	1/8	1/2	1/8	5/8	1/8	3/4	1/8	7/8	1/8
1 to 1 1/4, incl	5/8	1/8	5/8	1/8	3/4	1/8	7/8	1/8	1	1/8
Abrasive-cut: [E,F]										
3/16 to 1 1/4, incl	1/8	1/8	1/8	1/8	1/8	1/8	1/8	1/8	1/8	1/8
Over 1 1/4 to 2 3/4, incl	3/16	1/8	3/16	1/8	3/16	1/8	3/16	1/8	3/16	1/8
Plasma-torch-cut: [G]										
3/16 to 2, excl	1/2	0	1/2	0	1/2	0	1/2	0	1/2	0
2 to 3, incl	5/8	0	5/8	0	5/8	0	5/8	0	5/8	0
Millimetres										
Sheared: [D]										
4.8 to 7.9, excl	4.8	3.2	6.4	3.2	9.5	3.2	12.7	3.2	...	...
7.9 to 12.7, excl	6.4	3.2	9.5	3.2	9.5	3.2	12.7	3.2	15.9	3.2
12.7 to 19.1, excl	9.5	3.2	9.5	3.2	12.7	3.2	15.9	3.2	19.1	3.2
19.1 to 25.4, excl	12.7	3.2	12.7	3.2	15.8	3.2	19.1	3.2	22.2	3.2
25.4 to 31.8, incl	15.9	3.2	15.9	3.2	19.1	3.2	22.2	3.2	25.4	3.2
Abrasive-cut: [E,F]										
4.8 to 31.8, incl	3.2	3.2	3.2	3.2	3.2	3.2	3.2	3.2	3.2	3.2
Over 31.8 to 69.8, incl	4.8	3.2	4.8	3.2	4.8	3.2	4.8	3.2	4.8	3.2
Plasma-torch-cut: [G]										
4.8 to 50.8, excl	12.7	0	12.7	0	12.7	0	12.7	0	12.7	0
50.8 to 76.2, incl	15.9	0	15.9	0	15.9	0	15.9	0	15.9	0

[A] Permissible variations in width for powder- or inert-arc-cut plate shall be as agreed upon between the manufacturer and the purchaser.

[B] Permissible variations in machined, powder-, or inert-arc-cut circular plate shall be as agreed upon between the manufacturer and the purchaser.

[C] Permissible variations in plasma-torch-cut sketch plates shall be as agreed upon between the manufacturer and the purchaser.

[D] The minimum sheared width is 10 in. (254 mm) for material 3/4 in. (19.0 mm) and under in thickness and 20 in. (508 mm) for material over 3/4 in. in thickness.

[E] The minimum abrasive-cut width is 2 in. (50.8 mm) and increases to 4 in. (101.6 mm) for thicker plates.

[F] These tolerances are applicable to lengths of 240 in. (6100 mm), max. For lengths over 240 in., an additional 1/16 in. (1.6 mm) is permitted, both plus and minus.

[G] The tolerance spread shown for plasma-torch cutting may be obtained all on the minus side, or divided betwen the plus and minus side if so specified by the purchaser.

TABLE 6
PERMISSIBLE VARIATIONS IN LENGTH[A] OF SHEARED-PLASMA TORCH-CUT,[B] AND ABRASIVE-CUT RECTANGULAR PLATE[C]

	Permissible Variation in Length for Lengths Given, in. (mm)															
	Up to 60 (1520), incl		Over 60 to 96 (1520 to 2440), incl		Over 96 to 120 (2440 to 3050), incl		Over 120 to 240 (3050 to 6096), incl		Over 240 to 360 (6096 to 9144), incl		Over 360 to 450 (9144 to 11430), incl		Over 450 to 540 (11430 to 13716), incl		Over 540 (13716)	
Specified Thickness	+	−	+	−	+	−	+	−	+	−	+	−	+	−	+	−
Inches																
Sheared: [D]																
3/16 to 5/16, excl	3/16	1/8	1/4	1/8	3/8	1/8	1/2	1/8	5/8	1/8	3/4	1/8	7/8	1/8	...	...
5/16 to 1/2, excl	3/8	1/8	1/2	1/8	1/2	1/8	1/2	1/8	5/8	1/8	3/4	1/8	7/8	1/8	1	1/8
1/2 to 3/4, excl	1/2	1/8	1/2	1/8	5/8	1/8	5/8	1/8	3/4	1/8	7/8	1/8	1 1/8	1/8	1 3/8	1/8
3/4 to 1, excl	5/8	1/8	5/8	1/8	5/8	1/8	3/4	1/8	7/8	1/8	1 1/8	1/8	1 3/8	1/8	1 5/8	1/8
1 to 1 1/4, incl	3/4	1/8	3/4	1/8	3/4	1/8	7/8	1/8	1 1/8	1/8	1 3/8	1/8	1 5/8	1/8	...	...
Abrasive-cut: [E]																
3/16 to 1-1/4, incl	1/8	1/8	1/8	1/8	1/8	1/8	1/8	1/8	1/8	1/8	1/8	1/8	...	...	...	...
Over 1 1/4 to 2 3/4, incl	3/16	1/8	3/16	1/8	3/16	1/8	3/16	1/8	3/16	1/8	3/16	1/8	...	...	...	...
Plasma-torch-cut: [F]																
3/16 to 2, excl	1/2	0	1/2	0	1/2	0	1/2	0	1/2	0	1/2	0	1/2	0	1/2	0
2 to 3, incl	5/8	0	5/8	0	5/8	0	5/8	0	5/8	0	5/8	0	5/8	0	5/8	0
Millimetres																
Sheared: [D]																
4.8 to 7.9, excl	4.8	3.2	6.4	3.2	9.5	3.2	12.7	3.2	15.9	3.2	19.0	3.2	22.2	3.2	...	...
7.94 to 12.7, excl	9.5	3.2	12.7	3.2	12.7	3.2	12.7	3.2	15.9	3.2	19.0	3.2	22.2	3.2	25.4	3.2
12.7 to 19.0, excl	12.7	3.2	12.7	3.2	15.9	3.2	15.9	3.2	19.0	3.2	22.2	3.2	28.6	3.2	34.9	3.2
19.0 to 25.4, excl	15.9	3.2	15.9	3.2	15.9	3.2	19.0	3.2	22.2	3.2	28.6	3.2	34.9	3.2	41.2	3.2
25.4 to 31.8, incl	19.0	3.2	19.0	3.2	19.0	3.2	22.2	3.2	28.6	3.2	34.9	3.2	41.2	3.2	...	...
Abrasive-cut: [E]																
4.8 to 31.8, incl	3.2	3.2	3.2	3.2	3.2	3.2	3.2	3.2	3.2	3.2	3.2	3.2	...	...	...	...
Over 31.8 to 69.9, incl	4.8	3.2	4.8	3.2	4.8	3.2	4.8	3.2	4.8	3.2	4.8	3.2	...	...	...	...
Plasma-torch-cut: [F]																
4.8 to 50.8, excl	12.7	0	12.7	0	12.7	0	12.7	0	12.7	0	12.7	0	12.7	0	12.7	0
50.8 to 76.2, incl	15.9	0	15.9	0	15.9	0	15.9	0	15.9	0	15.9	0	15.9	0	15.9	0

[A] Permissible variations in length for powder- or inert arc-cut plate shall be agreed upon between the manufacturer and the purchaser.

[B] The tolerance spread shown for plasma torch cutting may be obtained all on the minus side, or divided between the plus and minus sides if so specified by the purchaser.

[C] Permissible variations in machined, powder- or inert arc-cut circular plate shall be as agreed upon between the manufacturer and the purchaser.

[D] The minimum sheared length is 10 in. (254 mm).

[E] Abrasive cut applicable to a maximum length of 144 to 400 in. (3658 to 10160 mm) depending on the thickness and width ordered.

[F] The tolerance spread shown for plasma torch-cut sketch plates shall be as agreed upon between the manufacturer and the purchaser.

TABLE 7
PERMISSIBLE VARIATIONS IN THICKNESS AND OVERWEIGHT OF RECTANGULAR PLATES

Specified Thickness, in. (mm)	Permissible Excess in Average Weight,[B,C] per Square Foot of Plates for Widths Given in Inches (Millimeters) Expressed in Percentage of Nominal Weights									
	Under 48 (1220)	48 to 60 (1220 to 1520), excl	60 to 72 (1520 to 1830), excl	72 to 84 (1830 to 2130), excl	84 to 96 (2130 to 2440), excl	96 to 108 (2440 to 2740), excl	108 to 120 (2740 to 3050), excl	120 to 132 (3050 to 3350), excl	132 to 144 (3350 to 3660), excl	144 to 160 (3660 to 4070), incl
3/16 to 5/16 (4.76 to 7.94), excl	9.0	10.5	12.0	13.5	15.0	16.5	18.0	...	...	...
5/16 to 3/8 (7.94 to 9.52), excl	7.5	9.0	10.5	12.0	13.5	15.0	16.5	18.0	...	...
3/8 to 7/16 (9.52 to 11.11), excl	7.0	7.5	9.0	10.5	12.0	13.5	15.0	16.5	18.0	19.5
7/16 to 1/2 (11.11 to 12.70), excl	6.0	7.0	7.5	9.0	10.5	12.0	13.5	15.0	16.5	18.0
1/2 to 5/8 (12.70 to 15.88), excl	5.0	6.0	7.0	7.5	9.0	10.5	12.0	13.5	15.0	16.5
5/8 to 3/4 (15.88 to 19.05), excl	4.5	5.5	6.0	7.0	7.5	9.0	10.5	12.0	13.5	15.0
3/4 to 1 (19.05 to 25.4), excl	4.0	4.5	5.5	6.0	7.0	7.5	9.0	10.5	12.0	13.5
1 to 2 (25.4 to 50.8), incl	4.0	4.0	4.5	5.5	6.0	7.0	7.5	9.0	10.5	12.0

GENERAL NOTE — All plates shall be ordered to thickness and not to weight per square foot (cm). No plates shall vary more than 0.01 in. (0.25 mm) under the thickness ordered, and the overweight of each lot[A] in each shipment shall not exceed the amount given in the table. Spot grinding is permitted to remove surface imperfections, such spots not to exceed 0.01 in (0.25 mm) under the specified thickness.

[A] The term "lot" applied to this table means all of the plates of each group width and each group thickness.
[B] The permissible overweight for lots of circular and sketch plates shall be 25% greater than the amounts given in this table.
[C] The weight of individual plates shall not exceed the nominal weight by more than 1¼ times the amount given in the table and Footnote *B*.

TABLE 8
PERMISSIBLE VARIATIONS IN THICKNESS FOR RECTANGULAR PLATES OVER 2 in. (50.8 mm) IN THICKNESS

	Permissible Variations, in. (mm), over Specified Thickness for Widths Given, in. (mm)					
Specified Thickness, in. (mm)	To 36 (915), excl	36 to 60 (915 to 1520), excl	60 to 84 (1520 to 2130), excl	84 to 120 (2130 to 3050), excl	120 to 132 (3050 to 3350), excl	132 (3350) and over
Over 2 to 3 (50.8 to 76.2), excl	1/16 (1.59)	3/32 (2.38)	7/64 (2.78)	1/8 (3.18)	1/8 (3.18)	9/64 (3.57)
3 to 4 (76.2 to 101.6), incl	5/64 (1.98)	3/32 (2.38)	7/64 (2.78)	1/8 (3.18)	1/8 (3.18)	9/64 (3.57)

GENERAL NOTE — Permissible variation under specified thickness, 0.01 in. (0.25 mm).

TABLE 9
PERMISSIBLE VARIATIONS IN THICKNESS OF SHEET AND STRIP
[PERMISSIBLE VARIATIONS, PLUS AND MINUS, IN THICKNESS, in. (mm), FOR WIDTHS GIVEN IN in. (mm)]

	Sheet [A]			
	Hot-Rolled		Cold-Rolled	
Specified Thickness, in. (mm)	48 (1220) and Under	Over 48 to 60 (1220 to 1520), incl	48 (1220) and Under	Over 48 to 60 (1220 to 1520), incl
0.018 to 0.025 (0.5 to 0.6), incl	0.003 (0.08)	0.004 (0.10)	0.002 (0.05)	0.003 (0.08)
Over 0.025 to 0.034 (0.6 to 0.9), incl	0.004 (0.10)	0.005 (0.13)	0.003 (0.08)	0.004 (0.10)
Over 0.034 to 0.043 (0.9 to 1.1), incl	0.005 (0.13)	0.006 (0.15)	0.004 (0.10)	0.005 (0.13)
Over 0.043 to 0.056 (1.1 to 1.4), incl	0.005 (0.13)	0.006 (0.15)	0.004 (0.10)	0.005 (0.13)
Over 0.056 to 0.070 (1.4 to 1.8), incl	0.006 (0.15)	0.007 (0.18)	0.005 (0.13)	0.006 (0.15)
Over 0.070 to 0.078 (1.8 to 1.9), incl	0.007 (0.18)	0.008 (0.20)	0.006 (0.15)	0.007 (0.18)
Over 0.078 to 0.093 (1.9 to 2.4), incl	0.008 (0.20)	0.009 (0.23)	0.007 (0.18)	0.008 (0.20)
Over 0.093 to 0.109 (2.4 to 2.8), incl	0.009 (0.23)	0.010 (0.25)	0.007 (0.18)	0.009 (0.23)
Over 0.109 to 0.125 (2.8 to 3.2), incl	0.010 (0.25)	0.012 (0.31)	0.008 (0.20)	0.010 (0.25)
Over 0.125 to 0.140 (3.2 to 3.6), incl	0.012 (0.31)	0.014 (0.36)	0.008 (0.20)	0.010 (0.25)
Over 0.140 to 0.171 (3.6 to 4.3), incl	0.014 (0.36)	0.016 (0.41)	0.009 (0.23)	0.012 (0.31)
Over 0.171 to 0.187 (4.3 to 4.8), incl	0.015 (0.38)	0.017 (0.43)	0.010 (0.25)	0.013 (0.33)
Over 0.187 to 0.218 (4.8 o 5.5), incl	0.017 (0.43)	0.019 (0.48)	0.011 (0.28)	0.015 (0.38)
Over 0.218 to 0.234 (5.5 to 5.9), incl	0.018 (0.46)	0.020 (0.51)	0.012 (0.31)	0.016 (0.41)
Over 0.234 to 0.250 (5.9 to 6.4), incl	0.020 (0.51)	0.022 (0.56)	0.013 (0.33)	0.018 (0.46)

	Cold-Rolled Strip [A,B]
Specified Thickness, in. (mm)	Widths 12 in. (305 mm) and under, plus and minus
Up to 0.050 (1.27), incl	0.0015 (0.038)
Over 0.050 to 0.093 (1.27 to 2.39), incl	0.0025 (0.063)
Over 0.093 to 0.125 (2.39 to 3.18), incl	0.004 (0.11)

[A] Measured 3/8 in. (9.5 mm) or more from either edge except for strip under 1 in. (25.4 mm) in width which is measured at any place.
[B] Standard sheet tolerances apply for thicknesses over 0.125 in. (3.2 mm) and for all thicknesses of strip over 12 in. (305 mm) wide.

TABLE 10
PERMISSIBLE VARIATIONS IN DIAMETER FOR CIRCULAR PLATES SHEARED PLATE

Sheared Plate	
Specified Diameter, in.(mm)	Permissible Variations Over Specified Diameter for Thickness Given, in. (mm) [A] To 3/8 (9.52), incl
20 to 32 (508 to 813), excl	1/4 (6.35)
32 to 84 (813 to 2130), excl	5/16 (7.94)
84 to 108 (2130 to 2740), excl	3/8 (9.52)
108 to 140 (2740 to 3580), incl	7/16 (11.11)

Plasma Torch-Cut [B]					
	Permissible Variations in Specified Diameter for Thickness Given, in (mm) [C]				
Specified Diameter, in. (mm)	Thickness max, in. (mm)	3/16 to 2 (4.76 to 50.8), excl		2 to 3 (50.8 to 76.2), incl	
		+	−	+	−
19 to 20 (483 to 508), excl	3 (76.2)	1/2 (12.70)	0	5/8 (15.88)	0
20 to 22 (508 to 559), excl	2 3/4 (69.8)	1/2 (12.70)	0	5/8 (15.88)	0
22 to 24 (550 to 610), excl	2 1/2 (63.5)	1/2 (12.70)	0	5/8 (15.88)	0
24 to 28 (610 to 711), excl	2 1/4 (57.3)	1/2 (12.70)	0	5/8 (15.88)	0
28 to 32 (711 to 812), excl	2 (50.8)	1/2 (12.70)	0	5/8 (15.88)	0
32 to 34 (812 to 864), excl	1 3/4 (44.5)	1/2 (12.70)	0	...	...
34 to 38 (864 to 965), excl	1 1/2 (38.1)	1/2 (12.70)	0	...	...
38 to 40 (965 to 1020), excl	1 1/4 (31.8)	1/2 (12.70)	0	...	...
40 to 140 (1020 to 3560), incl	3 (76.2)	1/2 (12.70)	0	5/8 (15.88)	0

[A] No permissible variations under.
[B] Permissible variations in plasma torch-cut sketch plates shall be as agreed upon between the manufacturer and the purchaser.
[C] The tolerance spread shown may also be obtained all on the minus side or divided between the plus and minus sides if so specified by the purchaser.

8.5.1.1 Square-edge strip shall be supplied with finished edges, with sharp, square corners, without bevel or rounding.

8.5.1.2 Round-edge strip shall be supplied with finished edges, semicircular in form, the diameter of the circle forming the edge being equal to the strip thickness.

8.5.1.3 When no description of any required form of strip edge is given, it shall be understood that edges such as those resulting from slitting or shearing will be acceptable.

8.5.1.4 Sheet shall have sheared or slit edges.

8.5.1.5 Plate shall have sheared or cut (machined, abrasive-cut, powder-cut, or inert arc-cut) edges, as specified.

8.6 *Squareness (Sheet):*

8.6.1 For sheets of all thicknesses, the angle between adjacent sides shall be 90 ±0.15 deg. (1/16 in. in 24 in.) (1.59 mm in 610 mm).

8.7 *Flatness:*

8.7.1 There shall be no flatness requirements for "deep drawing quality" and "spinning quality"sheet and strip (see X1.1.3).

8.7.2 Standard flatness tolerances for plate shall conform to the requirements of Table 12. "Specially-flattened" plate when so specified, shall have permissible variations in flatness as agreed upon between the manufacturer and the purchaser.

9. Workmanship, Finish, and Appearance

9.1 The material shall be uniform in quality and temper, smooth, commercially straight or flat, and free of injurious imperfections.

10. Sampling

10.1 *Lot:*

10.1.1 A lot for chemical analysis shall consist of one heat.

10.1.2 A lot for mechanical properties, hardness, and grain size testing shall consist of all material from the same heat, nominal thickness, and condition (temper).

10.1.2.1 Where material cannot be identified by heat, a lot shall consist of not more than 500 lb (227 kg) of material in the same thickness and condition, except

TABLE 11
PERMISSIBLE VARIATIONS IN WIDTH OF SHEET AND STRIP

Specified Thickness, in. (mm)	Specified Width, in. (mm)	Permissible Variations in Specified Width, in. (mm)	
		+	±
	Sheet		
Up to 0.250 (6.35)	all	0.125 (3.18)	0
	Strip [A]		
Under 0.075 (1.9)	Up to 12 (305), incl	0.007 (0.18)	0.007 (0.18)
	Over 12 to 48 (305 to 1219), incl	0.062 (1.6)	0
0.075 to 0.100 (1.9 to 2.5), incl	Up to 12 (305), incl	0.009 (0.23)	0.009 (0.23)
	Over 12 to 48 (305 to 1219), incl	0.062 (1.6)	0
Over 0.100 to 0.125 (2.5 to 3.2), incl	Up to 12 (305), incl	0.012 (0.30)	0.012 (0.30)
	Over 12 to 48 (305 to 1219), incl	0.062 (1.6)	0
Over 0.125 to 0.160 (3.2 to 4.1), incl	Up to 12 (305), incl	0.016 (0.41)	0.016 (0.41)
	Over 12 to 48 (305 to 1219), incl	0.062 (1.6)	0
Over 0.160 to 0.187 (4.1 to 4.7), incl	Up to 12 (305), incl	0.020 (0.51)	0.020 (0.51)
	Over 12 to 48 (305 to 1219), incl	0.062 (1.6)	0
Over 0.187 to 0.250 (4.7 to 6.4), incl	Up to 12 (305), incl	0.062 (1.6)	0.062 (1.6)
	Over 12 to 48 (305 to 1219), incl	0.062 (1.6)	0.062 (1.6)

[A] Rolled round or square, edge strip in thicknesses of 0.071 to 0.125 in. (1.80 to 3.18 mm), incl in widths 3 in. (76.2 mm) and under, shall have permissible width variations of ±0.005 in. (±0.13 mm). Permissible variations for other sizes shall be as agreed upon between the manufacturer and the purchaser.

for plates weighing over 500 lb, in which case only one specimen shall be taken.

10.2 *Test Material Selection:*

10.2.1 *Chemical Analysis* — Representative samples shall be taken during pouring or subsequent processing.

10.2.1.1 Product (check) analysis shall be wholly the responsibility of the purchaser.

10.2.2 *Mechanical Properties, Hardness, and Grain Size* — Samples of the material to provide test specimens for mechanical properties, hardness, and grain size shall be taken from such locations in each lot as to be representative of that lot.

11. Number of Tests

11.1 *Chemical Analysis* — One test per lot.

11.2 *Mechanical Properties* — One test per lot.

11.3 *Hardness* — One test per lot. (Required only as specified in Table 4.)

11.4 *Grain Size* — One test per lot. (Required only as specified in 7.2 and in Table 4.)

12. Specimen Preparation

12.1 Tension test specimens shall be taken from material in the final condition (temper) and tested transverse to the direction of rolling when width will permit.

12.2 Tension test specimens shall be any of the standard or subsize specimens shown in Test Methods E 8.

12.3 In the event of disagreement, referee specimens shall be as follows:

12.3.1 Full thickness of the material, machined to the form and dimensions shown for the sheet-type specimen in Test Methods E 8 for material under $\frac{1}{2}$ in. (12.7 mm) in thickness.

12.3.2 The largest possible round specimen shown in Test Methods E 8 for material $\frac{1}{2}$ in. (12.7 mm) and over.

13. Test Methods

13.1 The chemical composition, mechanical, and other properties of the material as enumerated in this specification shall be determined, in case of disagreement, in accordance with the following methods:

TABLE 12
PERMISSIBLE VARIATIONS FROM FLATNESS OF RECTANGULAR, CIRCULAR, AND SKETCH PLATES

Specified Thickness	Permissible Variations from a Flat Surface for Thickness and Widths Given, in. (mm)								
	To 48 (1220), excl	48 to 60 (1220 to 1520), excl	60 to 72 (1520 to 1830), excl	72 to 84 (1830 to 2130), excl	84 to 96 (2130 to 2440), excl	96 to 108 (2440 to 2740), excl	108 to 120 (2740 to 3050), excl	120 to 144 (3050 to 3660), excl	144 (3660), and over
				Inches					
3/16 to 1/4, excl	3/4	1 1/16	1 1/4	1 3/8	1 5/8	1 5/8	...	...	...
1/4 to 3/8, excl	11/16	3/4	15/16	1 1/8	1 3/8	1 7/16	1 9/16	1 7/8	...
3/8 to 1/2, excl	1/2	9/16	11/16	3/4	15/16	1 1/8	1 1/4	1 7/16	1 3/4
1/2 to 3/4, excl	1/2	9/16	5/8	5/8	13/16	1 1/8	1 1/8	1 1/8	1 3/8
3/4 to 1, excl	1/2	9/16	5/8	5/8	3/4	13/16	15/16	1	1 1/8
1 to 2, excl	1/2	9/16	9/16	9/16	11/16	11/16	11/16	3/4	1
2 to 4, excl	1/4	5/16	3/8	7/16	1/2	9/16	5/8	3/4	7/8
				Millimetres					
4.76 to 6.35, excl	19.05	27.0	31.7	34.9	41.3	41.3	...	...	...
6.35 to 9.52, excl	17.46	19.05	23.81	28.6	35.0	36.5	39.7	47.6	...
9.52 to 12.70, excl	12.70	14.29	17.46	19.05	23.8	28.6	31.7	35.0	44.4
12.70 to 19.05, excl	12.70	14.29	15.88	15.88	20.64	28.6	28.6	28.6	34.9
19.05 to 25.4, excl	12.70	14.29	15.88	15.88	19.05	20.64	23.81	25.4	28.6
25.4 to 50.8, excl	12.70	14.29	14.29	14.29	17.46	17.46	17.46	19.05	25.4
50.8 to 101.6, incl	6.35	7.94	9.52	11.11	12.70	14.29	15.88	19.05	22.22

GENERAL NOTES:
(1) Permissible variations apply to plates up to 12 ft (366 cm) in length, or to any 12 ft (366 cm) of longer plates.
(2) If the longer dimension is under 36 in. (914 mm), the permissible variation is not greater than 1/4 in. (6.35 mm)
(3) The shorter dimension specified is considered the width, and the permissible variation in flatness across the width does not exceed the tubular amount of that dimension.
(4) The maximum deviation from a flat surface does not customarily exceed the tabular tolerance for the longer dimension specified.

Test	ASTM Designation
Chemical Analysis	1473
Tension	E 8
Brinell Hardness	E 10
Rockwell Hardness	E 18
Rounding Procedure	E 29
Grain Size	E 112
Hardness Conversion	E 140
Spring-Back	F 155

13.2 The measurement of average grain size may be carried out by the planimetric method, the comparison method, or the intercept method described in Methods E 112. In case of dispute, the "referee" method for determining average grain size shall be the planimetric method.

13.3 For purposes of determining compliance with the specified limits for requirements of the properties listed in the following table, an observed value or a calculated value shall be rounded as indicated below, in accordance with the rounding method of Practice E 29.

Test	Rounded Unit for Observed or Calculated Value
Chemical composition, hardness, and tolerances (when expressed in decimals)	Nearest unit in the last right-hand place of figures of the specified limit. If two choices are possible, as when the digits dropped are exactly a 5, or a 5 followed only by zeros, choose the one ending in an even digit, with zero defined as an even digit.
Tensile strength and yield strength	Nearest 1000 psi (6.9 MPa)
Elongation	Nearest 1%
Grain Size:	
0.0024 in. (0.060 mm) or larger	Nearest multiple of 0.0002 in. (0.005 mm)
Less than 0.0024 in. (0.060 mm)	Nearest multiple of 0.0001 in. (0.002 mm)

14. Inspection

14.1 Inspection of the material shall be made as agreed upon by the manufacturer and the purchaser as part of the purchase contract.

15. Rejection and Rehearing

15.1 Material not conforming to this specification or to authorized modifications will be subject to rejection.

15.2 Samples tested in accordance with this specification that represent rejected material shall be preserved for not less than 3 weeks from the date of the test report. In case of dissatisfaction with the results of the tests, the manufacturer may make claim for a rehearing within that time.

16. Certification

16.1 A manufacturer's certification shall be furnished to the purchaser stating that material has been manufactured, tested, and inspected in accordance with this specification, and that the test results on representative samples meet specification requirements. A report of the test results shall be furnished.

17. Product Marking

17.1 Each bundle or shipping container shall be marked with the name of the material; condition (temper); this specification number; the size; gross, tare, and net weight; consignor and consignee address; contract or order number; or such other information as may be defined in the contract or order.

18. Keywords

18.1 plate; sheet; strip; UNS N08120; UNS N08800; UNS N08801; UNS N08810; UNS N08811

APPENDIX

(Nonmandatory Information)

X1. CONDITIONS (TEMPERS) AND FINISHES

X1.1 This appendix lists the conditions and finishes in which plate, sheet, and strip are normally supplied. These are subject to change and the manufacturer should be consulted for the latest information available.

X1.1.1 *Plate, Hot Rolled:*

X1.1.1.1 *Annealed* — Soft with an oxide surface, and suitable for heavy cold forming. Available with a descaled surface, when so specified.

X1.1.1.2 *As-Rolled* — With an oxide surface. Available with a descaled surface, when so specified. Suitable for flat work, mild forming, or tube sheets. When intended for tube sheets, specify that plates are to be specially flattened. When intended for hot forming, this should be indicated on the purchase order so that the manufacturer may select appropriate material.

X1.1.2 *Plate, Cold Rolled:*

X1.1.2.1 *Annealed* — Soft with an oxide surface; available with a descaled surface when so specified.

X1.1.3 *Sheet, Hot-Rolled, Annealed, and Pickled* — Soft with a pickled matte finish. Properties similar to X1.1.4.1 but with broader thickness tolerances. Not suggested for applications where the finish of a cold-rolled sheet is considered essential, or for deep drawing, or spinning.

X1.1.4 *Sheet and Strip, Cold-Rolled:*

X1.1.4.1 *Annealed* — Soft with a descaled or bright annealed finish.

X1.1.4.2 *Deep-Drawing or Spinning Quality* — Similar to X1.1.4.1, except furnished to controlled hardness and grain size and lightly leveled.

SPECIFICATION FOR NICKEL-IRON-CHROMIUM-MOLYBDENUM-COPPER ALLOY (UNS N08825 and N08221) SEAMLESS PIPE AND TUBE

SB-423

(Identical with ASTM Specification B 423-99 except that certification has been made mandatory and 4.1.7 has been changed to reference 9.1.) 04

1. Scope

1.1 This specification covers nickel-iron-chromium-molybdenum-copper alloys (UNS N08825 and UNS N08221) in the form of cold-worked and hot-finished seamless pipe and tube intended for general corrosive service. The general requirements for pipe and tube are covered in Specification B 829.

1.2 The following precautionary caveat pertains only to the test methods portion, Section 9, of this specification: *This standard does not purport to address all of the safety concerns, if any, associated with its use. It is the responsibility of the user of this standard to establish appropriate safety and health practices and determine the applicability of regulatory limitations prior to use.*

2. Referenced Document

2.1 *ASTM Standard:*

B 829 Specification for General Requirements for Nickel and Nickel Alloy Seamless Pipe and Tube

3. General Requirement

3.1 Material furnished under this specification shall conform to the applicable requirements of Specification B 829 unless otherwise provided herein.

4. Ordering Information

4.1 It is the responsibility of the purchaser to specify all requirements that are necessary for the safe and satisfactory performance of material ordered under this specification. Examples of such requirements include, but are not limited to, the following:

4.1.1 Alloy name or UNS number,

4.1.2 ASTM designation,

4.1.3 Condition (see Appendix X2),

4.1.4 Finish (see Appendix X2),

4.1.5 *Dimensions:*

4.1.5.1 *Tube* — Specify outside diameter and nominal or minimum wall,

4.1.5.2 *Pipe* — Specify standard pipe size and schedule,

4.1.5.3 *Length* — Cut to length or random,

4.1.6 *Quantity* — Feet (or metres) or number of pieces,

4.1.7 *Hydrostatic Pressure Requirements* — Specify test pressure if other than required by 9.1,

4.1.8 *Certification* — Certification is required,

4.1.9 *Samples for Product (Check) Analysis* — State whether samples for product (check) analysis should be furnished (see 5.2),

4.1.10 *Purchaser Inspection* — If purchaser wishes to witness tests or inspection of material at place of manufacture, the purchase order must so state indicating which tests or inspections are to be witnessed, and

4.1.11 *Small-Diameter and Light-Wall Tube (Converter Sizes)* — See Appendix X1.

5. Chemical Composition

5.1 The material shall conform to the composition limits specified in Table 1. One test is required for each lot as defined in Specification B 829.

5.2 If a product (check) analysis is performed by the purchaser, the material shall conform to the product (check) analysis variations in Specification B 829.

6. Mechanical Properties and Other Requirements

6.1 *Tension Test* — The material shall conform to the tensile properties specified in Table 2. The sampling and specimen preparation are as covered in Specification B 829.

6.1.1 Tensile properties for material specified as small-diameter and light-wall tube (converter sizes) shall be as prescribed in Table X1.1.

6.2 *Hydrostatic Test* — If any pipe or tube shows leaks during hydrostatic testing, it shall be rejected.

7. Dimensions and Permissible Variations

7.1 *Diameter and Wall Thickness* — The permissible variations in the outside diameter and wall thickness shall conform to the permissible variations prescribed in Tables 3 through 5 of Specification B 829.

7.2 Permissible variations for material specified as small-diameter and light-wall tube (converter size) shall conform to the permissible variations prescribed in Table X1.2.

8. Number of Tests

8.1 *Chemical Analysis* — One test per lot.

8.2 *Tension* — One test per lot.

8.3 *Hydrostatic* — Each piece in each lot.

TABLE 1
CHEMICAL REQUIREMENTS

Element	UNS N08825	UNS N08221
Nickel	38.0–46.0	39.0–46.0
Chromium	19.5–23.5	20.0–22.0
Iron	22.0 min	22.0 min
Manganese	1.0 max	1.0 max
Carbon	0.05 max	0.025 max
Copper	1.5–3.0	1.5–3.0
Silicon	0.5 max	0.5 max
Sulfur	0.03 max	0.03 max
Aluminum	0.2 max	0.2 max
Titanium	0.6–1.2	0.6–1.0
Molybdenum	2.5–3.5	5.0–6.5

9. Test Methods

9.1 *Hydrostatic Test* — Each pipe or tube with an outside diameter $\frac{1}{8}$ in. (3 mm) and larger and with wall thickness of 0.015 in. (0.38 mm) and over shall be tested based on allowable fiber stress for material in the condition furnished as follows:

UNS N08825 hot finished, annealed:	16 600 psi (114 MPa)
UNS N08825 cold-worked, annealed:	21 200 psi (146 MPa)
UNS N08221 cold-finished, annealed:	19 700 psi (138 MPa)

9.1.1 When so agreed upon between the manufacturer and purchaser, pipe or tube may be tested to $1\frac{1}{2}$ times the allowable fiber stress given in 9.1.

10. Keywords

10.1 N08221; N08825; seamless pipe; seamless tube

TABLE 2
MECHANICAL PROPERTIES OF PIPE AND TUBE

Alloy	Condition and Size	Tensile Strength, min, ksi (MPa)	Yield Strength 0.2% Offset, min, ksi (MPa)	Elongation in 2 in. or 50 min (4D), min, %
UNS N08825	hot-finished annealed	75 (517)	25 (172)	30
UNS N08825	cold-worked annealed	85 (586)	35 (241)	30
UNS N08825	hot-forming quality (hot-finished or cold-drawn annealed)	[A]	[A]	[A]
UNS N08221	cold-finished, annealed	79 (545)	34 (234)	30

[A] Hot-forming quality is furnished to chemical requirements and surface inspection only. No mechanical properties are required.

APPENDIXES

(Nonmandatory Information)

X1. CONVERTER SIZES

X1.1 Small-diameter and light-wall tube in outside diameters 1¼ in. (31.8 mm) and under may be furnished in the conditions listed in Table X1.1 when so specified. The material is furnished in a limited range of sizes and the manufacturer should be consulted as to the various outside diameters and wall thicknesses that may be furnished. Material will have a right finish. Such material shall conform to the applicable requirements in Table X1.1 and Table X1.2.

X2. CONDITIONS AND FINISHES NORMALLY SUPPLIED

X2.1 Scope

X2.1.1 This appendix lists the conditions and finishes in which pipe and tube (other than converter sizes) are normally supplied. These are subject to change, and the manufacturer should be consulted for the latest information available.

X2.2 Cold-Worked Tube and Pipe

X2.2.1 *Cold-Worked, Annealed, With Ground Outside Diameter* — The inside diameter may have a bright finish when material is annealed in a protective atmosphere; otherwise, the inside diameter is supplied descaled as necessary. It is available in sizes ½ to 4 in. (12.7 to 102 mm), inclusive, in outside diameter in both normal and heavy-wall tube, and pipe sizes, all schedules, of corresponding outside-diameter dimensions.

X2.2.2 *Cold-Worked, Annealed, and Pickled (Not Ground)* — Outside and inside diameter will have dull, matte (pickled) surfaces. It is available in sizes ½ to 6⅝ in. (12.7 to 168 mm) inclusive, in outside diameter in both normal and heavy-wall tube, and pipe sizes, all schedules, of corresponding outside diameter dimensions.

X2.3 Hot-Worked Tube

X2.3.1 *Hot-Worked-Annealed, (Not Pickled) Tube* — Has an oxide surface resulting from the hot-working operation. Intended generally for machined parts where the oxide surface will be removed.

X2.3.2 *Hot-Worked-Annealed, (Pickled) Tube* — Has the oxide surface removed on both the outside and inside diameters by pickling. Surface may be spot ground for removal of minor surface imperfections at the manufacturer's option.

X2.3.3 *Hot-Worked-Annealed (Machined Outside and Inside Diameters) Tubes* — The outside and inside diameter surfaces are machined to specified dimensions. Minor surface imperfections may be spot ground for removal, at the manufacturer's option.

TABLE X1.1
MECHANICAL PROPERTIES[A] OF SMALL-DIAMETER AND LIGHT-WALL TUBING (CONVERTER SIZES)

Condition	Tensile Strength, ksi (MPa)	Yield Strength (0.2% offset) min, ksi (MPa)	Elongation in 2 in. or 50 mm, min, %
Annealed[BC]	85–115 (586–793)	35 (241)	30
Half-Hard[D]	105 (724) min	75 (517)	15
Full-Hard[E]	125 (862) min	100 (689)	5

[A] Not applicable to outside diameters under ⅛ in. (3.2 mm) and wall thickness under 0.015 in. (0.381 mm).
[B] This condition is sometimes designated as "No. 1 Temper."
[C] The minimum tensile strength value applies only to tubing in straight lengths.
[D] This condition is sometimes designated as "No. 2 Temper."
[E] This condition is sometimes designated as "No. 3 Temper."

TABLE X1.2
PERMISSIBLE VARIATIONS FOR SMALL-DIAMETER AND LIGHT-WALL TUBE (CONVERTER SIZES)[ABCDEFG]

Specified Outside Diameter, in. (mm)	Outside Diameter, in. (mm)		Inside Diameter, in. (mm)		Wall Thickness, %	
	+	−	+	−	+	−
Under 3/32 (2.4)	0.002 (0.05)	0	0	0.002 (0.05)	10	10
3/32 to 3/16 (2.4 to 4.8), excl	0.003 (0.08)	0	0	0.003 (0.08)	10	10
3/16 to 1/2 (4.8 to 12.7), excl	0.004 (0.10)	0	0	0.004 (0.10)	10	10
1/2 to 1 1/4 (12.7 to 31.8), incl	0.005 (0.13)	0	0	0.005 (0.13)	10	10

[A] *Ovality, Normal Wall Tube* — As-Drawn (No. 2 and 3) Tempers—Ovality will be held within the outside diameter tolerances shown in the table.

Annealed (No. 1) Temper — Ovality will be held within 2% of the theoretical average outside diameter.

[B] *Ovality, Light Wall Tube — As-Drawn (No. 2 and 3) Tempers*—Up to but not including 1 1/4 in (31.8 mm) in outside diameter, ovality will be held within 2% of the theoretical average outside diameter.

Annealed (No. 1) Temper — Ovality will be held within 3% of the theoretical average outside diameter.

[C] *Wall Tolerances, Light Wall Tube* — The plus and minus wall tolerance shown in the table shall apply down to and including 0.005 in (0.13 mm) in wall thickness. For wall thickness less than 0.005 in. (0.13 mm), the tolerance shall be ±0.0005 in. (0.013 mm).

[D] *Random Lengths:*

Where nominal random lengths on tubing 1/8 in (3.2 mm) and larger in outside diameter are specified, a length tolerance of ±3 1/2 ft (1.06 m) applies to the nominal length. This is a total spread of 7 ft (2.10 m).

Random lengths in sizes 1/8 in.(3.2 mm) and larger in outside diameter shall be subject to a length range of 5 to 24 ft (1.50 to 7.30 m). Long random lengths are subject to a range of 15 to 22 ft (4.57 to 6.70 m).

Random lengths, in sizes up to, but not including, 1/8 in (3.2 mm) in outside diameter and fragile light-wall tubes over this outside diameter are subject to the length range of 1 to 15 ft (0.30 to 4.57 m).

[E] *Cut Lengths* — Tolerances on cut lengths shall be in accordance with Table X1.2.

[F] *Straightness* — Round tubing is subject to straightness tolerance of one part in 600 [equivalent to a depth of arc of 0.030 in. (0.76 mm) in any 3 ft (0.91 m) on length].

[G] When specified, the tolerance spreads of this table may be applied as desired. However, when not specified, the tolerances in this table will apply. It should be noted that inside diameter tolerances are based upon the outside diameter range.

TABLE X1.3
TOLERANCES ON CUT LENGTHS OF LIGHT-WALL TUBE

Length, ft (m)	Tube Size, in. (mm)	Permissible Variations, in. (mm)	
		Over	Under
Under 1 (0.30)	up to 1.250 (31.8), incl	1/32 (0.8)	0 (0)
1 to 4 (0.30 to 1.22), incl	up to 1.250 (31.8), incl	1/16 (1.6)	0 (0)
Over 4 to 10 (1.22 to 3.0), incl	up to 1.250 (31.8), incl	3/32 (2.4)	0 (0)
Over 10 (3.0)	up to 1.250 (31.8), incl	3/16 (4.8)	0 (0)

SPECIFICATION FOR Ni-Fe-Cr-Mo-Cu ALLOY (UNS N08825 AND UNS N08221) PLATE, SHEET, AND STRIP

SB-424

(Identical with ASTM B 424-93 except that certification has been made mandatory and a report of test results must be furnished.)

1. Scope

1.1 This specification covers rolled nickel-iron-chromium-molybdenum-copper alloy (UNS N08825 and UNS N08221) plate, sheet, and strip.

1.2 The values stated in inch-pound units are to be regarded as the standard. The values given in parentheses are for information only.

2. Referenced Documents

2.1 *ASTM Standards:*

B 425 Specification for Ni-Fe-Cr-Mo-Cu Alloy (UNS N08825 and UNS N08221) Rod and Bar

E 8 Test Methods of Tension Testing of Metallic Materials

E 29 Practice for Using Significant Digits in Test Data to Determine Conformance with Specifications

E 38 Methods for Chemical Analysis of Nickel-Chromium and Nickel-Chromium-Iron Alloys

E 354 Test Methods for Chemical Analysis of High-Temperature, Electrical, Magnetic, and Other Similar Iron, Nickel, and Cobalt Alloys

3. Terminology

3.1 *Descriptions of Terms Specific to This Standard* — The terms given in Table 1 shall apply.

4. Ordering Information

4.1 Orders for material to this specification shall include information with respect to the following:

4.1.1 Specification designation,

4.1.2 Alloy name or UNS number,

4.1.3 *Condition* — Table 3 and Appendix X1,

TABLE 1
PRODUCT DESCRIPTION

Product	Thickness, in. (mm)	Width, in. (mm)
Hot-rolled plate[A]	3/16 (4.76) and over (Tables 4 and 5)	(Table 7)[B]
Cold-rolled plate[A]	3/16 to 3/8 (4.8 to 9.5), incl (Table 4)	(Table 7)
Hot-rolled sheet[A]	0.018 to 0.250 (0.46 to 6.4), incl (Table 6)	(Table 9)
Cold-rolled sheet[C]	0.018 to 0.250 (0.46 to 6.4), incl (Table 6)	(Table 9)
Cold-rolled strip[C]	0.005 to 0.250 (0.13 to 6.4), incl (Table 6)	(Table 9)

[A] Material 3/16 to 1/4 in. (4.8 to 6.4 mm), incl, in thickness may be furnished as sheet or plate provided the material meets the specification requirements for the condition ordered.

[B] Hot-rolled plate, in widths 10 in. (254 mm) and under, may be furnished as hot-finished rectangles with sheared or cut edges in accordance with Specification B 425, provided the mechanical property requirements of this specification are met.

[C] Material under 48 in. (1219 mm) in width may be furnished as sheet or strip provided the material meets the specification requirements for the condition ordered.

4.1.4 *Finish* — Appendix X1,

4.1.5 *Dimensions* — Thickness, width, and length,

4.1.6 *Quantity,*

4.1.7 *Optional Requirements:*

4.1.7.1 *Sheet and Strip* — Whether to be furnished in coil, in cut straight lengths, or in random straight lengths,

4.1.7.2 *Strip* — Whether to be furnished with commercial slit edge, square edge, or round edge,

4.1.7.3 *Plate* — Whether to be furnished specially flattened (see 7.7); also how plate is to be cut (Tables 7 and 10),

TABLE 2
CHEMICAL REQUIREMENTS

Element	UNS N08825	UNS N08221	Product (Check) Analysis Tolerances Over the max or Under the min Limit, %
Nickel	38.0 to 46.0	39.0 to 46.0	0.30/0.35
Chromium	19.5 to 23.5	20.0 to 22.0	0.25
Iron	22.0 min[A]	balance	0.30
Manganese	1.0 max	1.0 max	0.03
Carbon	0.05 max	0.025 max	0.01
Copper	1.5 to 3.0	1.5 to 3.0	0.04
Silicon	0.5 max	0.5 max	0.03
Sulfur	0.03 max	0.03 max	0.005
Aluminum	0.2 max	0.2 max	0.05
Titanium	0.6 to 1.2	0.6 to 1.0	0.04/0.05 (0.04 for N08221)
Molybdenum	2.5 to 3.5	5.0 to 6.5	0.05/0.10 (0.10 for UNS N08221)

[A] Element shall be determined arithmetically by difference.

4.1.8 *Samples for Product (Check) Analysis* — Whether samples for product (check) analysis should be furnished (see 5.2), and

4.1.9 *Purchaser Inspection* — If the purchaser wishes to witness tests or inspection of material at the place of manufacture, the purchase order must so state, indicating which tests or inspections are to be witnessed (Section 13).

5. Chemical Composition

5.1 The material shall conform to the composition limits specified in Table 2.

5.2 If a product (check) analysis is performed by the purchaser, the material shall conform to the product (check) analysis variations in Table 2.

6. Mechanical Properties

6.1 *Mechanical Properties* — The material shall conform to the mechanical properties specified in Table 3.

7. Dimensions and Permissible Variations

7.1 *Thickness and Weight:*

7.1.1 *Plate* — For plate up to 2 in. (50.8 mm), inclusive, in thickness, the permissible variation under the specified thickness and permissible excess in overweight shall not exceed the amounts prescribed in Table 4.

7.1.1.1 For use with Table 4, plate shall be assumed to weigh 0.294 lb/in.^{3} (8.138 g/cm^3).

7.1.2 *Plate* — For plate over 2 in. (50.8 mm) in thickness, the permissible variations over the specified thickness shall not exceed the amounts prescribed in Table 5.

7.1.3 *Sheet and Strip* — The permissible variations in thickness of sheet and strip shall be as prescribed in Table 6. The thickness of strip and sheet shall be measured with the micrometer spindle $^3/_8$ in. (9.5 mm) or more from either edge for material 1 in. (25.4 mm) or over in width and at any place on the strip under 1 in. (25.4 mm) in width.

7.2 *Width or Diameter:*

7.2.1 *Plate* — The permissible variations in width of rectangular plates and diameter of circular plates shall be as prescribed in Tables 7 and 8.

7.2.2 *Sheet and Strip* — The permissible variations in width for sheet and strip shall be as prescribed in Table 9.

7.3 *Length:*

7.3.1 Sheet and strip of all sizes may be ordered to cut lengths, in which case a variation of $^1/_8$ in. (3.2 mm) over the specified length shall be permitted.

7.3.2 Permissible variations in length of rectangular plate shall be as prescribed in Table 10.

7.4 *Straightness:*

7.4.1 The edgewise curvature (depth of chord) of flat sheet, strip, and plate shall not exceed 0.05 in. (1.27 mm) multiplied by the length in feet (0.04 mm multiplied by the length in centimeters).

7.4.2 Straightness for coiled material is subject to agreement between the manufacturer and the purchaser.

7.5 *Edges:*

7.5.1 When finished edges of strip are specified in the contract or order, the following descriptions shall apply:

TABLE 3
MECHANICAL PROPERTIES FOR PLATE, SHEET, AND STRIP
(All Thicknesses and Sizes Unless Otherwise Indicated)

Alloy	Condition	Tensile Strength, min, ksi (MPa)	Yield Strength[A] (0.2 % offset), min, ksi (MPa)	Elongation in 2 in. or 50 mm (or 4*D*), min, %
Hot-Rolled Plate:				
UNS N08825	annealed	85 (586)	35 (241)	30
UNS N08221	annealed	79 (544)	34 (235)	30
Cold-Rolled Plate:				
UNS N08825	annealed	85 (586)	35 (241)	30
UNS N08221	annealed	79 (544)	34 (235)	30
Hot-Rolled Sheet:				
UNS N08825	annealed	85 (586)	35 (241)	30
UNS N08221	annealed	79 (544)	34 (235)	30
Cold-Rolled Sheet:				
UNS N08825	annealed	85 (586)	35 (241)	30
UNS N08221	annealed	79 (544)	34 (235)	30
Cold-Rolled Strip:				
UNS N08825	annealed	85 (586)[B]	35 (241)	30[B]
UNS N08221	annealed	79 (544)[B]	34 (235)	30[B]

[A] Yield strength requirements do not apply to material under 0.020 in. (0.51 mm) in thickness.
[B] Not applicable for thickness under 0.010 in. (0.25 mm).

7.5.1.1 Square-edge strip shall be supplied with finished edges, with sharp, square corners, without bevel or rounding.

7.5.1.2 Round-edge strip shall be supplied with finished edges, semicircular in form, the diameter of the circle forming the edge being equal to the strip thickness.

7.5.1.3 When no description of any required form of strip edge is given, it shall be understood that edges such as those resulting from slitting or shearing will be acceptable.

7.5.1.4 Sheet shall have sheared or slit edges.

7.5.1.5 Plate shall have sheared or cut (machined, abrasive cut, powder cut, or inert arc cut) edges, as specified.

7.6 *Squareness (Sheet)* — For sheets of all thicknesses, the angle between adjacent sides shall be 90 ± 0.15 deg. ($^1/_{16}$ in. in 24 in.) (1.6 mm in 610 mm).

7.7 *Flatness* — Standard flatness tolerances for plate shall conform to the requirements of Table 11. "Specifically-flattened" plate, when so specified, shall have permissible variations in flatness as agreed upon between the manufacturer and the purchaser.

8. Workmanship, Finish, and Appearance

8.1 The material shall be uniform in quality and temper, smooth, commercially straight or flat, and free of injurious imperfections.

9. Sampling

9.1 *Lot* — Definition:

9.1.1 A lot for chemical analysis shall consist of one heat.

9.1.2 A lot for mechanical testing shall consist of all material from the same heat, nominal thickness, and condition.

9.1.2.1 Where material cannot be identified by heat, a lot shall consist of not more than 500 lb (227 kg) of material in the same thickness and condition, except for plates weighing over 500 lb (227 kg), in which case only one specimen shall be taken.

9.2 *Test Material Selection:*

9.2.1 *Chemical Analysis* — Representative samples from each lot shall be taken during pouring or subsequent processing.

9.2.1.1 Product (check) analysis shall be wholly the responsibility of the purchaser.

9.2.2 *Mechanical Properties* — Samples of the material to provide test specimens for mechanical properties shall be taken from such locations in each lot as to be representative of that lot.

10. Number of Tests

10.1 *Chemical Analysis* — One test per lot.

10.2 *Mechanical Properties* — One test per lot.

TABLE 4
PERMISSIBLE VARIATIONS IN THICKNESS AND OVERWEIGHT OF RECTANGULAR PLATES

Specified Thickness, in. (mm)	Permissible Excess in Average Weight,[B,C] per Square Foot of Plates for Widths Given in Inches (Millimetres) Expressed in Percent of Nominal Weights									
	Under 48 (1220)	48 to 60 (1220 to 1520), excl	60 to 72 (1520 to 1830), excl	72 to 84 (1830 to 2130), excl	84 to 96 (2130 to 2440), excl	96 to 108 (2440 to 2740), excl	108 to 120 (2740 to 3050), excl	120 to 132 (3050 to 3350), excl	132 to 144 (3350 to 3660), excl	144 to 160 (3660 to 4070), incl
3/16 to 5/16 (4.8 to 7.9), excl	9.0	10.5	12.0	13.5	15.0	16.5	18.0	...	...	...
5/16 to 3/8 (7.9 to 9.5), excl	7.5	9.0	10.5	12.0	13.5	15.0	16.5	18.0	...	...
3/8 to 7/16 (9.5 to 11.1), excl	7.0	7.5	9.0	10.5	12.0	13.5	15.0	16.5	18.0	19.5
7/16 to 1/2 (11.1 to 12.7), excl	6.0	7.0	7.5	9.0	10.5	12.0	13.5	15.0	16.5	18.0
1/2 to 5/8 (12.7 to 15.9), excl	5.0	6.0	7.0	7.5	9.0	10.5	12.0	13.5	15.0	16.5
5/8 to 3/4 (15.9 to 19.1), excl	4.5	5.5	6.0	7.0	7.5	9.0	10.5	12.0	13.5	15.0
3/4 to 1 (19.1 to 25.4), excl	4.0	4.5	5.5	6.0	7.0	7.5	9.0	10.5	12.0	13.5
1 to 2 (25.4 to 50.8), incl	4.0	4.0	4.5	5.5	6.0	7.0	7.5	9.0	10.5	12.0

NOTE — All plates shall be ordered to thickness and not to weight per square foot. No plates shall vary more than 0.01 in. (0.3 mm) under the thickness ordered, and the overweight of each lot[A] in each shipment shall not exceed the amount given in the table. Spot grinding is permitted to remove surface imperfections, such spots not to exceed 0.01 in. (0.3 mm) under the specified thickness.

[A] The term "lot" applied to this table means all of the plates of each group width and each group thickness.
[B] The permissible overweight for lots of circular and sketch plates shall be 25 % greater than the amounts given in this table.
[C] The weight of individual plates shall not exceed the nominal weight by more than 1¼ times the amount given in the table and Footnote *B*.

TABLE 5
PERMISSIBLE VARIATIONS IN THICKNESS FOR RECTANGULAR PLATES OVER 2 IN. (51 MM) IN THICKNESS

Specified Thickness, in. (mm)	Permissible Variations, in. (mm), over Specified Thickness for Widths Given, in. (mm)					
	To 36 (915), excl	36 to 60 (915 to 1520), excl	60 to 84 (1520 to 2130), excl	84 to 120 (2130 to 3050), excl	120 to 132 (3050 to 3350), excl	132 (3350) and over
Over 2 to 3 (51 to 76), excl	1/16 (1.6)	3/32 (2.4)	7/64 (2.8)	1/8 (3.2)	1/8 (3.2)	9/64 (3.6)
3 to 4 (76 to 102), incl	5/64 (2)	3/32 (2.4)	7/64 (2.8)	1/8 (3.2)	1/8 (3.2)	9/64 (3.6)

NOTE — Permissible variation under specified thickness, 0.01 in. (0.3 mm).

TABLE 6
PERMISSIBLE VARIATIONS IN THICKNESS OF SHEET AND STRIP
[Permissible Variations, Plus and Minus, in Thickness, in. (mm), for widths Given in in. (mm)]

Specified Thickness, in. (mm), incl	Sheet[A]			
	Hot-Rolled		Cold-Rolled	
	48 (1220) and under	Over 48 to 60 (1220 to 1520), incl	48 (1220) and under	Over 48 to 60 (1220 to 1520), incl
0.018 to 0.025 (0.5 to 0.6)	0.003 (0.08)	0.004 (0.10)	0.002 (0.05)	0.003 (0.08)
Over 0.025 to 0.034 (0.6 to 0.9)	0.004 (0.10)	0.005 (0.13)	0.003 (0.08)	0.004 (0.10)
Over 0.034 to 0.043 (0.9 to 1.1)	0.005 (0.13)	0.006 (0.15)	0.004 (0.10)	0.005 (0.13)
Over 0.043 to 0.056 (1.1 to 1.4)	0.005 (0.13)	0.006 (0.15)	0.004 (0.10)	0.005 (0.13)
Over 0.056 to 0.070 (1.4 to 1.8)	0.006 (0.15)	0.007 (0.18)	0.005 (0.13)	0.006 (0.15)
Over 0.070 to 0.078 (1.8 to 1.9)	0.007 (0.18)	0.008 (0.20)	0.006 (0.15)	0.007 (0.18)
Over 0.078 to 0.093 (1.9 to 2.4)	0.008 (0.20)	0.009 (0.23)	0.007 (0.18)	0.008 (0.20)
Over 0.093 to 0.109 (2.4 to 2.8)	0.009 (0.23)	0.010 (0.25)	0.007 (0.18)	0.009 (0.23)
Over 0.109 to 0.125 (2.8 to 3.2)	0.010 (0.25)	0.012 (0.31)	0.008 (0.20)	0.010 (0.25)
Over 0.125 to 0.140 (3.2 to 3.6)	0.012 (0.31)	0.014 (0.36)	0.008 (0.20)	0.010 (0.25)
Over 0.140 to 0.171 (3.6 to 4.3)	0.014 (0.36)	0.016 (0.41)	0.009 (0.23)	0.012 (0.31)
Over 0.171 to 0.187 (4.3 to 4.8)	0.015 (0.38)	0.017 (0.43)	0.010 (0.25)	0.013 (0.33)
Over 0.187 to 0.218 (4.8 to 5.5)	0.017 (0.43)	0.019 (0.48)	0.011 (0.28)	0.015 (0.38)
Over 0.218 to 0.234 (5.5 to 5.9)	0.018 (0.46)	0.020 (0.51)	0.012 (0.31)	0.016 (0.41)
Over 0.234 to 0.250 (5.9 to 6.4)	0.020 (0.51)	0.022 (0.56)	0.013 (0.33)	0.018 (0.46)

Specified Thickness, in. (mm), incl	Cold-Rolled Strip[A,B]
	Widths 12 in. (305 mm) and under, plus and minus
Up to 0.050 (1.27)	0.0015 (0.038)
Over 0.050 to 0.093 (1.27 to 2.39)	0.0025 (0.063)
Over 0.093 to 0.125 (2.39 to 3.18)	0.004 (0.11)

[A] Measured 3/8 in. (9.5 mm) or more from either edge except for strip under 1 in. (25.4 mm) in width which is measured at any place.
[B] Standard sheet tolerances apply for thicknesses over 0.125 in. (3.2 mm) and for all thicknesses of strip over 12 in. (305 mm) wide.

11. Specimen Preparation

11.1 Tension test specimens shall be taken from material in the final condition (temper) and tested transverse to the direction of rolling when width will permit.

11.2 Tension test specimens shall be any of the standard or subsize specimens shown in Test Methods E 8.

11.3 In the event of disagreement, referee specimens shall be as follows:

11.3.1 Full thickness of the material, machined to the form and dimensions shown for the sheet-type specimen in Test Methods E 8 for material under 1/2 in. (12.7 mm) in thickness.

11.3.2 The largest possible round specimen shown in Test Methods E 8 for material 1/2 in. (12.7 mm) and over.

TABLE 7
PERMISSIBLE VARIATIONS IN WIDTH[A] OF SHEARED, PLASMA TORCH-CUT, AND ABRASIVE-CUT RECTANGULAR PLATE[B,C]

	Permissible Variations in Widths for Widths Given, in. (mm)									
	Up to 30 (760), incl		Over 30 to 72 (760 to 1830), incl		Over 72 to 108 (1830 to 2740), incl		Over 108 to 144 (2740 to 3660), incl		Over 144 to 160 (3660 to 4070, incl	
Specified Thickness	+	−	+	−	+	−	+	−	+	−
Inches										
Sheared:[D]										
3/16 to 5/16, excl	3/16	1/8	1/4	1/8	3/8	1/8	1/2	1/8	...	...
5/16 to 1/2, excl	1/4	1/8	3/8	1/8	3/8	1/8	1/2	1/8	5/8	1/8
1/2 to 3/4, excl	3/8	1/8	3/8	1/8	1/2	1/8	5/8	1/8	3/4	1/8
3/4 to 1, excl	1/2	1/8	1/2	1/8	5/8	1/8	3/4	1/8	7/8	1/8
1 to 1 1/4, incl	5/8	1/8	5/8	1/8	3/4	1/8	7/8	1/8	1	1/8
Abrasive-cut:[E,F]										
3/16 to 1 1/4, incl	1/8	1/8	1/8	1/8	1/8	1/8	1/8	1/8	1/8	1/8
Over 1 1/4 to 2 3/4, incl	3/16	1/8	3/16	1/8	3/16	1/8	3/16	1/8	3/16	1/8
Plasma torch-cut:[G]										
3/16 to 2, excl	1/2	0	1/2	0	1/2	0	1/2	0	1/2	0
2 to 3, incl	5/8	0	5/8	0	5/8	0	5/8	0	5/8	0
Millimetres										
Sheared:[D]										
4.8 to 7.9, excl	4.8	3.2	6.4	3.2	9.5	3.2	12.7	3.2	...	...
7.9 to 12.7, excl	6.4	3.2	9.5	3.2	9.5	3.2	12.7	3.2	15.9	3.2
12.7 to 19.1, excl	9.5	3.2	9.5	3.2	12.7	3.2	15.9	3.2	19.1	3.2
19.1 to 25.4, excl	12.7	3.2	12.7	3.2	15.8	3.2	19.1	3.2	22.2	3.2
25.4 to 31.8, incl	15.9	3.2	15.9	3.2	19.1	3.2	22.2	3.2	25.4	3.2
Abrasive-cut:[E,F]										
4.8 to 31.8, incl	3.2	3.2	3.2	3.2	3.2	3.2	3.2	3.2	3.2	3.2
Over 31.8 to 69.8, incl	4.8	3.2	4.8	3.2	4.8	3.2	4.8	3.2	4.8	3.2
Plasma torch-cut:[G]										
4.8 to 50.8, excl	12.7	0	12.7	0	12.7	0	12.7	0	12.7	0
50.8 to 76.2, incl	15.9	0	15.9	0	15.9	0	15.9	0	15.9	0

[A] Permissible variations in width for powder- or inert arc-cut plate shall be as agreed upon between the manufacturer and the purchaser.

[B] Permissible variations in machined, powder-, or inert arc-cut circular plate shall be as agreed upon between the manufacturer and the purchaser.

[C] Permissible variations in plasma torch-cut sketch plates shall be as agreed upon between the manufacturer and the purchaser.

[D] The minimum sheared width is 10 in. (254 mm) for material 3/4 in. (19.1 mm) and under in thickness and 20 in. (508 mm) for material over 3/4 in. (19.1 mm) in thickness.

[E] The minimum abrasive-cut width is 2 in. (50.8 mm) and increases to 4 in. (101.6 mm) for thicker plates.

[F] These tolerances are applicable to lengths of 240 in. (6100 mm), max. For lengths over 240 in., an additional 1/16 in. (1.6 mm) is permitted, both plus and minus.

[G] The tolerance spread shown for plasma torch cutting may be obtained all on the minus side, or divided between the plus and minus side if so specified by the purchaser.

TABLE 8
PERMISSIBLE VARIATIONS IN DIAMETER FOR CIRCULAR PLATES

Specified Diameter, in. (mm)	Sheared Plate: Permissible Variations Over Specified Diameter for Thickness Given, in. (mm) [A] To 3/8 (9.5), incl
20 to 32 (508 to 813), excl	1/4 (6.4)
32 to 84 (813 to 2130), excl	5/16 (7.9)
84 to 108 (2130 to 2740), excl	3/8 (9.5)
108 to 140 (2740 to 3580), incl	7/16 (11.1)

	Plasma Torch-Cut Plate [B]				
		Permissible Variations in Specified Diameter for Thickness Given, in. (mm) [C]			
Specified Diameter, in. (mm)	Thickness, max, in. (mm)	3/16 to 2 (4.8 to 50.8), excl		2 to 3 (50.8 to 76.2), incl	
		+	−	+	−
19 to 20 (483 to 508), excl	3 (76.2)	1/2 (12.7)	0	5/8 (15.9)	0
20 to 22 (508 to 559), excl	2 3/4 (69.8)	1/2 (12.7)	0	5/8 (15.9)	0
22 to 24 (559 to 610), excl	2 1/2 (63.5)	1/2 (12.7)	0	5/8 (15.9)	0
24 to 28 (610 to 711), excl	2 1/4 (57.3)	1/2 (12.7)	0	5/8 (15.9)	0
28 to 32 (711 to 812), excl	2 (50.8)	1/2 (12.7)	0	5/8 (15.9)	0
32 to 34 (812 to 864), excl	1 3/4 (44.5)	1/2 (12.7)	0	...	...
34 to 38 (864 to 965), excl	1 1/2 (38.1)	1/2 (12.7)	0	...	...
38 to 40 (965 to 1020), excl	1 1/4 (31.8)	1/2 (12.7)	0	...	...
40 to 140 (1020 to 3560), incl	3 (76.2)	1/2 (12.7)	0	5/8 (15.9)	0

[A] No permissible variations under.
[B] Permissible variations in plasma torch-cut sketch plates shall be as agreed upon between the manufacturer and the purchaser.
[C] The tolerance spread shown may also be obtained all on the minus side or divided between the plus and minus sides if so specified by the purchaser.

12. Test Methods

12.1 The chemical composition and mechanical and other properties of the material as enumerated in this specification shall be determined, in case of disagreement, in accordance with the following ASTM standards:

Test	ASTM Designation
Chemical analysis	E 38, E 354[A]
Tension	E 8
Rounding procedure	E 29

[A] Methods E 38 are to be used only for elements not covered by Test Methods E 354.

12.2 For tension testing, the offset method is the preferred method. However, instead of the offset method, the minimum yield strength may be determined as the stress required to produce the elongation under load calculated as follows:

$$X = [(Y/Z) + 0.002 \times L]$$

where:

X = limiting extension under load, in. (or mm),
Y = specified yield strength at 0.2% offset, from Table 3,
Z = modulus of elasticity (28 300 000 psi) (195 GPa), and
L = gage length, in. (or mm),

12.2.1 In case of dispute, the offset method shall be used as the referee procedure.

12.3 For purposes of determining compliance with the specified limits for requirements of the properties listed in the following table, an observed value or a calculated value shall be rounded in accordance with the rounding method of Practice E 29.

Test	Rounded Unit for Observed or Calculated Value
Chemical composition and tolerances (when expressed in decimals)	Nearest unit in the last right-hand place of figures of the specified limit. If two choices are possible, as when the digits dropped are exactly a 5, or a 5 followed only by zeros, choose the one ending in an even digit, with zero defined as an even digit.
Tensile strength and yield strength	nearest 1000 psi (6.9 MPa)
Elongation	nearest 1%

TABLE 9
PERMISSIBLE VARIATIONS IN WIDTH OF SHEET AND STRIP

Specified Thickness, in. (mm)	Specified Width, in. (mm)	Permissible Variations in Specified Width, in. (mm) +	–
	Sheet		
Up to 0.250 (6.35)	all	0.125 (3.18)	0
	Strip[A]		
Under 0.075 (1.9)	Up to 12 (305), incl	0.007 (0.18)	0.007 (0.18)
	Over 12 to 48 (305 to 1219), incl	0.062 (1.6)	0
0.075 to 0.100 (1.9 to 2.5), incl	Up to 12 (305), incl	0.009 (0.23)	0.009 (0.23)
	Over 12 to 48 (305 to 1219), incl	0.062 (1.6)	0
Over 0.100 to 0.125 (2.5 to 3.2), incl	Up to 12 (305), incl	0.012 (0.30)	0.012 (0.30)
	Over 12 to 48 (305 to 1219), incl	0.062 (1.6)	0
Over 0.125 to 0.160 (3.2 to 4.1), incl	Up to 12 (305), incl	0.016 (0.41)	0.016 (0.41)
	Over 12 to 48 (305 to 1219), incl	0.062 (1.6)	0
Over 0.160 to 0.187 (4.1 to 4.7), incl	Up to 12 (305), incl	0.020 (0.51)	0.020 (0.51)
	Over 12 to 48 (305 to 1219), incl	0.062 (1.6)	0
Over 0.187 to 0.250 (4.7 to 6.4), incl	Up to 12 (305), incl	0.062 (1.6)	0.062 (1.6)
	Over 12 to 48 (305 to 1219), incl	0.062 (1.6)	0.062 (1.6)

[A] Rolled round or square-edge strip in thicknesses of 0.071 to 0.125 in. (1.80 to 3.18 mm), incl, in widths 3 in. (76.2 mm) and under, shall have permissible width variations of ±0.005 in. (±0.13 mm). Permissible variations for other sizes shall be as agreed upon between the manufacturer and the purchaser.

13. Inspection

13.1 Inspection of the material shall be made as agreed upon between the manufacturer and the purchaser as part of the purchase contract.

14. Rejection and Rehearing

14.1 Material that fails to conform to the requirements of this specification may be rejected. Rejection should be reported to the producer or supplier promptly and in writing. In case of dissatisfaction with the results of the test, the producer or supplier may make claim for a rehearing.

15. Certification

15.1 A certification shall be furnished to the purchaser that the material was manufactured, sampled, tested, and inspected in accordance with this specification and has been found to meet the requirements. A report of the test results shall be furnished.

16. Product Marking

16.1 Each bundle or shipping container shall be marked with the name of the material or UNS number; condition; this specification number; the size; gross, tare, and net weight; consignor and consignee address; contract or order number; or such other information as may be defined in the contract or order.

TABLE 10
PERMISSIBLE VARIATIONS IN LENGTH[A] OF SHEARED, PLASMA TORCH-CUT,[B] AND ABRASIVE-CUT RECTANGULAR PLATE[C]

	Permissible Variation in Length Given, in. (mm)															
	Up to 60 (1520), incl		Over 60 to 96 (1520 to 2440), incl		Over 96 to 120 (2440 to 3050), incl		Over 120 to 240 (3050 to 6096), incl		Over 240 to 360 (6096 to 9144), incl		Over 360 to 450 (9144 to 11 430), incl		Over 450 to 540 (11 430 to 13 716), incl		Over 540 (13 716)	
Specified thickness	+	−	+	−	+	−	+	−	+	−	+	−	+	−	+	−
Inches																
Sheared:[D]																
3/16 to 5/16, excl	3/16	1/8	1/4	1/8	3/8	1/8	1/2	1/8	5/8	1/8	3/4	1/8	7/8	1/8	...	...
5/16 to 1/2, excl	3/8	1/8	1/2	1/8	1/2	1/8	1/2	1/8	5/8	1/8	3/4	1/8	7/8	1/8	1	1/8
1/2 to 3/4, excl	1/2	1/8	1/2	1/8	5/8	1/8	5/8	1/8	3/4	1/8	7/8	1/8	1 1/8	1/8	1 3/8	1/8
3/4 to 1, excl	5/8	1/8	5/8	1/8	5/8	1/8	3/4	1/8	7/8	1/8	1 1/8	1/8	1 3/8	1/8	1 5/8	1/8
1 to 1 1/4, incl	3/4	1/8	3/4	1/8	3/4	1/8	7/8	1/8	1 1/8	1/8	1 3/8	1/8	1 5/8	1/8	...	...
Abrasive-cut:[E]																
3/16 to 1 1/4, incl	1/8	1/8	1/8	1/8	1/8	1/8	1/8	1/8	1/8	1/8	1/8	1/8	...	...	...	...
Over 1 1/4 to 2 3/4, incl	3/16	1/8	3/16	1/8	3/16	1/8	3/16	1/8	3/16	1/8	3/16	1/8	...	...	...	...
Plasma torch-cut:[F]																
3/16 to 2, excl	1/2	0	1/2	0	1/2	0	1/2	0	1/2	0	1/2	0	1/2	0	1/2	0
2 to 3, incl	5/8	0	5/8	0	5/8	0	5/8	0	5/8	0	5/8	0	5/8	0	5/8	0
Millimetres																
Sheared:[D]																
4.8 to 7.9, excl	4.8	3.2	6.4	3.2	9.5	3.2	12.7	3.2	15.9	3.2	19.0	3.2	22.2	3.2	...	...
7.94 to 12.7, excl	9.5	3.2	12.7	3.2	12.7	3.2	12.7	3.2	15.9	3.2	19.0	3.2	22.2	3.2	25.4	3.2
12.7 to 19.0, excl	12.7	3.2	12.7	3.2	15.9	3.2	15.9	3.2	19.0	3.2	22.2	3.2	28.6	3.2	34.9	3.2
19.0 to 25.4, excl	15.9	3.2	15.9	3.2	15.9	3.2	19.0	3.2	22.2	3.2	28.6	3.2	34.9	3.2	41.2	3.2
25.4 to 31.8, incl	19.0	3.2	19.0	3.2	19.0	3.2	22.2	3.2	28.6	3.2	34.9	3.2	41.2	3.2	...	...
Abrasive-cut:[E]																
4.8 to 31.8, incl	3.2	3.2	3.2	3.2	3.2	3.2	3.2	3.2	3.2	3.2	3.2	3.2	...	...	...	...
Over 31.8 to 69.9, incl	4.8	3.2	4.8	3.2	4.8	3.2	4.8	3.2	4.8	3.2	4.8	3.2	...	...	...	...
Plasma torch-cut:[F]																
4.8 to 50.8, excl	12.7	0	12.7	0	12.7	0	12.7	0	12.7	0	12.7	0	12.7	0	12.7	0
50.8 to 76.2, incl	15.9	0	15.9	0	15.9	0	15.9	0	15.9	0	15.9	0	15.9	0	15.9	0

[A] Permissible variations in length for powder- or inert arc-cut plate shall be as agreed upon between the manufacturer and the purchaser.

[B] The tolerance spread shown for plasma torch cutting may be obtained all on the minus side, or divided between the plus and minus sides if so specified by the purchaser.

[C] Permissible variations in machined, powder- or inert arc-cut circular plate shall be as agreed upon between the manufacturer and the purchaser.

[D] The minimum sheared length is 10 in. (254 mm).

[E] Abrasive cut applicable to a maximum length of 144 to 400 in. (3658 to 10 160 mm), depending on the thickness and width ordered.

[F] The tolerance spread shown for plasma torch-cut sketch plates shall be as agreed upon between the manufacturer and the purchaser.

TABLE 11
PERMISSIBLE VARIATIONS FROM FLATNESS OF RECTANGULAR, CIRCULAR, AND SKETCH PLATES

Specified Thickness	Permissible Variations from a Flat Surface for Thickness and Widths Given, in. (mm)								
	To 48 (1220), excl	48 to 60 (1220 to 1520), excl	60 to 72 (1520 to 1830), excl	72 to 84 (1830 to 2130), excl	84 to 96 (2130 to 2440), excl	96 to 108 (2440 to 2740), excl	108 to 120 (2740 to 3050), excl	120 to 144 (3050 to 3660), excl	144 (3660), and over
				Inches					
3/16 to 1/4, excl	3/4	1 1/16	1 1/4	1 3/8	1 5/8	1 5/8	...	...	...
1/4 to 3/8, excl	11/16	3/4	15/16	1 1/8	1 3/8	1 7/16	1 9/16	1 7/8	...
3/8 to 1/2, excl	1/2	9/16	11/16	3/4	15/16	1 1/8	1 1/4	1 7/16	1 3/4
1/2 to 3/4, excl	1/2	9/16	5/8	5/8	13/16	1 1/8	1 1/8	1 1/8	1 3/8
3/4 to 1, excl	1/2	9/16	5/8	5/8	3/4	13/16	15/16	1	1 1/8
1 to 2, excl	1/2	9/16	9/16	9/16	11/16	11/16	11/16	3/4	1
2 to 4, incl	1/4	5/16	3/8	7/16	1/2	9/16	5/8	3/4	7/8
				Millimetres					
4.8 to 6.4, excl	19.05	27.0	31.7	34.9	41.3	41.3	...	...	...
6.4 to 9.5, excl	17.5	19.0	23.8	28.6	35.0	36.5	39.7	47.6	...
9.5 to 12.7, excl	12.7	14.3	17.5	19.0	23.8	28.6	31.7	35.0	44.4
12.7 to 19.0, excl	12.7	14.3	15.9	15.9	20.6	28.6	28.6	28.6	34.9
19.0 to 25.4, excl	12.7	14.3	15.9	15.9	19.0	20.6	23.8	25.4	28.6
25.4 to 50.8, excl	12.7	14.3	14.3	14.2	17.5	17.5	17.5	19.0	25.4
50.8 to 101.6, incl	6.4	7.9	9.5	11.1	12.7	14.3	15.9	19.0	22.2

NOTE 1 — Permissible variations apply to plates up to 12 ft (3.66 m) in length, or to any 12 ft (3.66 m) of longer plates.

NOTE 2 — If the longer dimension is under 36 in. (914 mm), the permissible variation is not greater than 1/4 in. (6.4 mm).

NOTE 3 — The shorter dimension specified is considered the width, and the permissible variation in flatness across the width does not exceed the tubular amount of that dimension.

NOTE 4 — The maximum deviation from a flat surface does not customarily exceed the tabular tolerance for the longer dimension specified.

APPENDIX

(Nonmandatory Information)

X1. CONDITIONS AND FINISHES NORMALLY SUPPLIED

X1.1 Scope

X1.1.1 This appendix lists the conditions and finishes in which plate, sheet, and strip are normally supplied. These are subject to change, and the manufacturer should be consulted for the latest information available.

X1.2 Plate

X1.2.1 Hot-rolled, annealed, and descaled.

X1.2.2 Cold-rolled, annealed, and descaled.

X1.3 Sheet

X1.3.1 Hot-rolled, annealed, and descaled.

X1.3.2 Cold-rolled, annealed, and descaled or bright annealed.

X1.4 Strip

X1.4.1 Cold-rolled, annealed, descaled, or bright annealed.

SPECIFICATION FOR Ni-Fe-Cr-Mo-Cu ALLOY (UNS N08825 AND UNS N08221) ROD AND BAR

SB-425

(Identical with ASTM Specification B 425-99 except that certification has been made mandatory.)

1. Scope

1.1 This specification covers nickel-iron-chromium-molybdenum-copper alloy (UNS N08825 and UNS N08221) in the form of hot-finished and cold-drawn rounds, squares, hexagons, and rectangles.

1.2 The values stated in inch-pound units are to be regarded as the standard. The values given in parentheses are for information only.

1.3 The following precautionary caveat pertains only to the test methods portion, Section 12, of this specification: *This standard does not purport to address all of the safety problems, if any, associated with its use. It is the responsibility of the user of this standard to establish appropriate safety and health practices and determine the applicability of regulatory limitations prior to use.*

2. Referenced Documents

2.1 *ASTM Standards:*

B 424 Specification for Ni-Fe-Cr-Mo-Cu Alloy (UNS N08825 and UNS N08221) Plate, Sheet, and Strip

B 880 Specification for General Requirements for Chemical Check Analysis Limits for Nickel, Nickel Alloys and Cobalt Alloys

E 8 Test Methods for Tension Testing of Metallic Materials

E 29 Practice for Using Significant Digits in Test Data to Determine Conformance with Specifications

E 1473 Test Methods for Chemical Analysis of Nickel, Cobalt, and High-Temperature Alloys

3. Terminology

3.1 *Definitions of Terms Specific to This Standard:*

3.1.1 *bar* — material of rectangular (flats), hexagonal, or square solid section up to and including 10 in. (254 mm) in width and $\frac{1}{8}$ in. (3.2 mm) and over in thickness in straight lengths.

3.1.1.1 *Discussion* — Hot-worked rectangular bar in widths 10 in. (254 mm) and under may be furnished as hot-rolled plate with sheared or cut edges in accordance with Specification B 424, provided the mechanical property requirements of this specification are met.

3.1.2 *rod* — Material of round solid section furnished in straight lengths.

4. Ordering Information

4.1 It is the responsibility of the purchaser to specify all requirements that are necessary for the safe and satisfactory performance of material ordered under this specification. Examples of such requirements include, but are not limited to, the following:

4.1.1 ASTM designation and date of issue,

4.1.2 UNS number,

4.1.3 *Section* — Rod (round) or bar (square, hexagonal, or rectangular),

4.1.4 *Dimensions,* including length,

4.1.5 Condition (see Appendix X1),

4.1.6 Finish (see Appendix X1),

4.1.7 *Quantity* — Feet (or meters) or number of pieces,

4.1.8 *Certification* — Certification is required (Section 15),

4.1.9 *Samples for Product (Check) Analysis* — State whether samples for product (check) analysis should be furnished (see 5.2), and

4.1.10 *Purchaser Inspection* — If purchaser wishes

TABLE 1
CHEMICAL REQUIREMENTS

Element	UNS N08825	UNS N08221
Nickel	38.0–46.0	39.0–46.0
Chromium	19.5–23.5	20.0–22.0
Iron[A]	22.0 min	balance
Manganese	1.0 max	1.0 max
Carbon	0.05 max	0.025 max
Copper	1.5–3.0	1.5–3.0
Silicon	0.5 max	0.5 max
Sulfur	0.03 max	0.03 max
Aluminum	0.2 max	0.2 max
Titanium	0.6–1.2	0.6–1.0
Molybdenum	2.5–3.5	5.0–6.5

[A] Element shall be determined arithmetically by difference.

to witness tests or inspection of material at place of manufacture, the purchase order must so state, indicating which test or inspections are to be witnessed (Section 13).

5. Chemical Composition

5.1 The material shall conform to the composition limits specified in Table 1.

5.2 If a product (check) analysis is performed by the purchaser, it shall be done per B 880, and the material shall conform to the product (check) analysis variations defined in Table 1 of B 880.

6. Mechanical Properties and Other Requirements

6.1 *Mechanical Properties* — The material shall conform to the mechanical properties specified in Table 2.

7. Dimensions and Permissible Variations

7.1 *Diameter, Thickness, or Width* — The permissible variations from the specified dimensions as measured on the diameter or between parallel surfaces of cold-worked rod and bar shall be as prescribed in Table 3, and of hot-worked rod and bar as prescribed in Table 4.

7.2 *Out-of-Round* — Hot-worked rods and cold-worked rods (except "forging quality") all sizes, in straight lengths, shall not be out-of-round by more than one half the total permissible variations in diameter shown in Table 3 and Table 4, except for hot-worked rods ½ in. (12.7 mm) in diameter and under, which may be out-of-round by the total permissible variations in diameter shown in Table 4.

7.3 *Corners* — Cold-worked bars will have practically exact angles and sharp corners.

7.4 *Machining Allowances for Hot-Worked Materials* — When the surfaces of hot-worked products are to be machined, the allowances prescribed in Table 5 are recommended for normal machining operations.

7.5 *Length* — The permissible variations in length of cold-worked and hot-worked rod and bar shall be as prescribed in Table 6.

7.5.1 Rods and bars ordered to random or nominal lengths will be furnished with either cropped or saw-cut ends; material ordered to cut lengths will be furnished with square saw-cut or machined ends.

7.6 *Straightness:*

7.6.1 The permissible variations in straightness of cold-worked rod and bar as determined by the departure from straightness shall be as prescribed in Table 7.

7.6.2 The permissible variations in straightness of hot-worked rod and bar as determined by the departure from straightness shall be as specified in Table 8.

8. Workmanship, Finish, and Appearance

8.1 The material shall be uniform in quality and condition, smooth, commercially straight or flat, and free of injurious imperfections.

TABLE 2
MECHANICAL PROPERTIES (ROD AND BAR)

Alloy	Condition	Tensile Strength min, ksi (MPa)	Yield Strength 0.2 % offset, min, ksi (MPa)	Elongation in 2 in. or 50 mm or 4^D, min, %
UNS N08825	*Annealed:* Hot-finished,cold-drawn	85 (586)	35 (241)	30 [A]
UNS N08221	*Forging Quality:*	[B]	[B]	[B]
	All sizes annealed	79 (544)	34 (235)	30

[A] Not applicable to diameters or cross sections under $^3/_{32}$ in. (2.4 mm).
[B] Forging quality is furnished to chemical requirements and surface inspection only. No tensile properties are required.

TABLE 3
PERMISSIBLE VARIATIONS IN DIAMETER OR DISTANCE BETWEEN PARALLEL SURFACES OF COLD-WORKED ROD AND BAR

Specified Dimension, in. (mm)[A]	Permissible Variations From Specified Dimension, in. (mm)	
	Plus	Minus
Rounds:		
1/16 (1.6) to 3/16 (4.8), excl	0	0.002 (0.05)
3/16 (4.8) to 1/2 (12.7), excl	0	0.003 (0.08)
1/2 (12.7) to 15/16 (23.8), incl	0.001 (0.03)	0.002 (0.05)
Over 15/16 (23.8) to 1 15/16 (49.2), incl	0.0015 (0.04)	0.003 (0.08)
Over 1 15/16 (49.2) to 2 1/2 (63.5), incl	0.002 (0.05)	0.004 (0.10)
Hexagons, squares, rectangles:		
1/2 (12.7) and less	0	0.004 (0.10)
Over 1/2 (12.7) to 7/8 (22.2), incl	0	0.005 (0.13)
Over 7/8 (22.2) to 1 1/4 (31.8), incl	0	0.007 (0.18)
Over 1 1/4 (31.8) to 2 (50.8), incl	0	0.009 (0.23)

[A] Dimensions apply to diameter of rounds, to distance between parallel surfaces of hexagons and squares, and separately to width and thickness of rectangles.

TABLE 4
PERMISSIBLE VARIATIONS IN DIAMETER OR DISTANCE BETWEEN PARALLEL SURFACES OF HOT-WORKED ROD AND BAR

Specified Dimension, in. (mm)[A]	Permissible Variations From Specified Dimension, in. (mm)	
	Plus	Minus
Rod and bar, hot-worked:		
1 (25.4) and under	0.016 (0.41)	0.016 (0.41)
over 1 (25.4) to 2 (50.8), incl	0.031 (0.79)	0.016 (0.41)
over 2 (50.8) to 4 (101.6), incl	0.047 (1.19)	0.031 (0.79)
over 4 (101.6)	0.125 (3.18)	0.063 (1.60)
Rod, rough-turned or ground:		
Under 1 (25.4)	0.005 (0.13)	0.005 (0.13)
1 (25.4) and over	0.031 (0.79)	0
Forging quality rod:[B]		
Under 1 (25.4)	0.005 (0.13)	0.005 (0.13)
1 (25.4) and over	0.031 (0.79)	0

[A] Dimensions apply to diameter of rods, to distance between parallel surfaces of hexagons and squares, and separately to width and thickness of rectangles.

[B] Spot grinding is permitted to remove minor surface imperfections. The depth of these spot ground areas shall not exceed 3% of the diameter of the rod.

9. Sampling

9.1 *Lot — Definition:*

9.1.1 A lot for chemical analysis shall consist of one heat.

9.1.2 A lot for mechanical properties testing shall consist of all material from the same heat, nominal diameter or thickness, and condition.

9.1.2.1 Where material cannot be identified by heat, a lot shall consist of not more than 500 lb (227 kg) of material in the same size and condition. A single piece weighing over 500 lb shall be considered as one lot.

9.2 *Test Material Selection:*

9.2.1 *Chemical Analysis* — Representative samples from each lot shall be taken during pouring or subsequent processing.

9.2.1.1 Product (check) analysis shall be wholly the responsibility of the purchaser.

9.2.2 *Mechanical Properties* — Samples of the material to provide test specimens for mechanical properties shall be taken from such locations in each lot as to be representative of that lot.

10. Number of Tests

10.1 *Chemical Analysis* — One test per lot.

10.2 *Tension* — One test per lot.

11. Specimen Preparation

11.1 Tension test specimens shall be taken from material in the final condition and tested in the direction of fabrication.

11.1.1 All rod and bar shall be tested in full cross-section size when possible. When a full cross-section

TABLE 5
NORMAL MACHINING ALLOWANCES FOR HOT-WORKED MATERIAL

Finished-Machined Dimensions for Finishes As Indicated Below, in. (mm)[A]	Normal Machining Allowance, in. (mm)			
	On Diameter, for Rods	Distance Between Parallel Surfaces, for Hexagonal and Square Bars	For Rectangular Bar	
			On Thickness	On Width
Hot-worked:[B]				
Up to 7/8 (22.2), incl	1/8 (3.2)	1/8 (3.2)	1/8 (3.2)	3/16 (4.8)
Over 7/8 to 1 7/8 (22.2 to 47.6), incl	1/8 (3.2)	3/16 (4.8)	1/8 (3.2)	3/16 (4.8)
Over 1 7/8 to 2 7/8 (47.6 to 73.0), incl	3/16 (4.8)	1/4 (6.4)	...	3/16 (4.8)
Over 2 7/8 to 3 13/16 (73.0 to 96.8), incl	1/4 (6.4)	...	...	3/16 (4.8)
Over 3 13/16 (96.8)	1/4 (6.4)	...	...	3/8 (9.5)
Hot-worked rods, rough-turned or rough ground:[C]				
15/16 to 4 (23.8 to 101.6), incl in diameter	1/16 (1.6)	...	...	...
Over 4 to 12 (101.6 to 304.8), incl in diameter	1/8 (3.2)	...	...	...

[A] Dimensions apply to diameter of rods, to distance between parallel surfaces of hexagonal and square bar, and separately to width and thickness of rectangular bar.

[B] The allowances for hot-worked material in Table 5 are recommended for rods machined in lengths of 3 ft (0.91 m) or less and for bars machined in lengths of 2 ft (0.61 m) or less. Hot-worked material to be machined in longer lengths should be specified showing the finished cross-sectional dimension and the length in which the material will be machined in order that the manufacturer may supply material with sufficient oversize, including allowance for out-of-straightness.

[C] Applicable to 3 ft (0.91 m) max length.

size test cannot be performed, the largest possible round specimen shown in Test Methods E 8 shall be used. Longitudinal strip specimens shall be prepared in accordance with Test Methods E 8 for rectangular bar up to 1/2 in. (12.7 mm), inclusive, in thicknesses which are too wide to be pulled full size.

12. Test Methods

12.1 The chemical composition and mechanical and other properties of the material as enumerated in this specification shall be determined, in case of disagreement, in accordance with the following ASTM standards.

Test	ASTM Designation
Chemical analysis	E 1473
Tension	E 8
Rounding procedure	E 29

12.2 For purposes of determining compliance with the specified limits for requirements of the properties listed in the following table, an observed or calculated value shall be rounded as indicated below, in accordance with the rounding method of Practice E 29:

Test	Rounded unit for observed or calculated value
Chemical composition and tolerances (when expressed in decimals)	nearest unit in the last righthand place of figures of the specified limit. If two choices are possible, as when the digits dropped are exactly a 5, or a 5 followed only by zeros, choose the one ending in an even digit, with zero defined as an even digit.
Tensile strength and yield strength	nearest 1000 psi (6.9 MPa)
Elongation	nearest 1%

13. Inspection

13.1 Inspection of the material shall be made as agreed upon between the manufacturer and the purchaser as part of the purchase contract.

14. Rejection and Rehearing

14.1 Material tested by the purchaser that fails to conform to the requirements of this specification may be rejected. Rejection should be reported to the producer or supplier promptly and in writing. In case of dissatisfaction with the results of the test, the producer or supplier may make claim for a rehearing.

15. Certification

15.1 A manufacturer's certification shall be furnished to the purchaser stating that the material has been manufactured, tested, and inspected in accordance with this specification and that the test results on representative samples meet specification requirements. A report of the test results shall be furnished.

16. Product Marking

16.1 The following information shall be marked on the material or included on the package, or on a label or tag attached thereto: The name of the material or UNS number; heat number; condition (temper); this specification number; the size; gross, tare, and net weight; consignor and consignee address; contract or order number; or such other information as may be defined in the contract or order.

TABLE 6
PERMISSIBLE VARIATIONS IN LENGTH OF RODS AND BARS

Random mill lengths:	
Hot-worked	6 to 24 ft (1.83 to 7.31 m) long with not more than 25 weight % between 6 and 9 ft (1.83 and 2.74 m)[A]
Cold-worked	6 to 20 ft (1.83 to 6.1 m) long with not more than 25 weight % between 6 and 10 ft (1.83 and 3.05 m).
Multiple lengths	Furnished in multiples of a specified unit length, within the length limits indicated above. For each multiple, an allowance of $\frac{1}{4}$ in. (6.4 mm) will be made for cutting, unless otherwise specified. At the manufacturer's option, individual specified unit lengths may be furnished.
Nominal lengths	Specified nominal lengths having a range of not less than 2 ft (610 mm) with no short lengths allowed.[B]
Cut lengths	A specified length to which all rods and bars will be cut with a permissible variation of plus $\frac{1}{8}$ in. (3.2 mm) minus 0 for sizes 8 in. (203 mm) and less in diameter or distance between parallel surfaces. For larger sizes, the permissible variation shall be $+\frac{1}{4}$ in. (6.4 mm), −0.

[A] For hot-worked sections weighing over 25 lb/ft (37 kg/m) and for smooth forged products, all sections, short lengths down to 2 ft (610 mm) may be furnished.

[B] For cold-worked rods and bars under $\frac{1}{2}$ in. (12.7 mm) in diameter or distance between parallel surfaces ordered to nominal or stock lengths with a 2-ft (610-mm) range, at least 93% of such material shall be within the range specified; the balance may be in shorter lengths but in no case shall lengths less than 4 ft (1220 mm) be furnished.

TABLE 7
PERMISSIBLE VARIATIONS IN STRAIGHTNESS OF COLD-WORKED RODS AND BARS

Specified Diameter or Distance Between Parallel Surfaces, in (mm)[A]	Permissible Variations in Lengths Indicated, in. (mm)
Rounds:	Depth of chord:
½ (12.7) to 2½ (63.5), incl	0.030 (0.76) per ft (305 mm) of length
Hexagons, squares, rectangles:	
½ (12.7) to 2 (50.8), incl	0.030 (0.76) per ft (305 mm) of length

[A] Material under ½ in. (12.7 mm) shall be reasonably straight and free of sharp bends and kinks.

TABLE 8
PERMISSIBLE VARIATIONS IN STRAIGHTNESS OF HOT-WORKED RODS AND BARS[A]

Finish	Permissible Variations, in./ft (mm/m)[B]
Rods and bars, hot-worked	0.050 (4.2)[C]
Rounds—hot-worked, rough ground or rough turned	0.050 (4.2)[C]

[A] Not applicable to forging quality.
[B] Material under ½ in. (12.7 mm) shall be reasonably straight and free of sharp bends and kinks.
[C] The maximum curvature (depth of chord) shall not exceed the values indicated multiplied by the length in feet.

APPENDIX

(Nonmandatory Information)

X1. PROCURABLE CONDITIONS AND FINISHES

X1.1 The various conditions and finishes in which rod and bar are procurable are as follows:

X1.1.1 *Hot-Worked, Annealed* — Soft, with a tightly adherent dark oxide.

X1.1.2 *Hot-worked, Annealed, and Pickled* — Same as X1.1.1 except descaled for removal of mill oxide. Provides for better surface inspection than does hot-worked, annealed material and often employed where welding is involved where removal of mill oxide is desired.

NOTE X1.1 — Annealing prior to pickling may be required in order to reduce the mill oxide since uniform pickling of an unreduced oxide is difficult.

X1.1.3 *Hot-Worked, Annealed, and Rough-Ground* — Similar to X1.1.1 except rough-ground.

X1.1.4 *Hot-Worked, Annealed, and Rough-Turned* — Similar to X1.1.1 except rough-turned with a broad nosed tool similar to a bar peeling operation and thus may not be straight. Intended generally for machining where an overhauled surface is desired, essentially for machined step down shafts or parts machined in short lengths of 3 ft (0.91 m) or less.

X1.1.5 *Hot-Worked, Forging Quality* — Rough-turned and spot-ground as necessary, for sizes 1 in. (25.4 mm) in diameter and over; rough-ground and spot-ground for sizes under 1 in. in diameter. Material is selected from heats of known, good hot malleability.

NOTE X1.2 — For sizes $2\frac{1}{2}$ in. (63.5 mm) in diameter and less, cold-worked rod may be used also for forging by virtue of the fact such rod have been overhauled for removal of mechanical surface defects prior to cold-working. In such cases, the user should run pilot forging tests to ensure himself that such material has the desired hot malleability range.

X1.1.6 *Cold-Worked, Annealed, and Pickled* — Hot-worked, overhauled, cold-worked, annealed, descaled, and straightened. Annealed for softness and with a dull matte finish.

SPECIFICATION FOR NICKEL-MOLYBDENUM-CHROMIUM-IRON ALLOYS (UNS N10003, UNS N10242) PLATE, SHEET, AND STRIP

SB-434

(Identical with ASTM Specification B 434-00 except that certification has been made mandatory.)

1. Scope

1.1 This specification covers nickel-molybdenum-chromium-iron alloys (UNS N10003 and UNS N10242) plate, sheet, and strip for use in general corrosive service.

1.2 The following products are covered under this specification:

1.2.1 *Sheet and Strip* — Hot or cold rolled, annealed, and descaled unless annealing is performed in an atmosphere yielding a bright finish.

1.2.2 *Plate* — Hot rolled, annealed, and descaled.

1.3 The values stated in inch-pound units are to be regarded as the standard. The values given in parentheses are for information only.

2. Referenced Documents

2.1 *ASTM Standards:*

B 880 Specification for General Requirements for Chemical Check Analysis Limits for Nickel, Nickel Alloys and Cobalt Alloy

E 8 Test Methods for Tension Testing of Metallic Materials

E 29 Practice for Using Significant Digits in Test Data to Determine Conformance With Specifications

E 112 Test Methods for Determining the Average Grain Size

E 1473 Test Methods for Chemical Analysis of Nickel, Cobalt, and High-Temperature Alloys

3. Terminology

3.1 *Definitions of Terms Specific to This Standard:*

3.1.1 *plate* — material $^{3}/_{16}$ in. (4.76 mm) and over in thickness.

3.1.2 *sheet and strip* — material under $^{3}/_{16}$ in. (4.76 mm) in thickness.

4. Ordering Information

4.1 It is the responsibility of the purchaser to specify all requirements that are necessary for the safe and satisfactory performance of material ordered under this specification. Examples of such requirements include but are not limited to the following:

4.1.1 *Dimensions* — Thickness (in decimals of an inch), width, and length (inch or fraction of an inch),

4.1.2 *Certification* — Certification and a report of test results are required (Section 15),

4.1.3 *Purchase Inspection* — State which tests or inspections are to be witnessed (Section 13), and

4.1.4 *Samples for Product (Check) Analysis* — State whether samples shall be furnished (9.2.2).

5. Chemical Composition

5.1 The material shall conform to the requirements as to chemical composition prescribed in Table 1.

5.2 If a product (check) analysis is made by the purchaser, the material shall conform to the requirements specified in Table 1 subject to the permissible tolerances in B 880.

6. Mechanical Properties and Other Requirements

6.1 *Tensile Properties* — The material shall conform to the room temperature tensile properties prescribed in Table 2.

TABLE 1
CHEMICAL REQUIREMENTS

Element	Composition, % UNS N10242	Composition, % UNS N10003
Chromium	7.0–9.0	6.0–8.0
Iron, max	2.0	5.0
Carbon	0.03 max	0.04–0.08
Silicon, max	0.80	1.00
Cobalt, max	1.00	0.20
Manganese, max	0.80	1.00
Tungsten, max	...	0.50
Vanadium, max	...	0.50
Molybdenum	24.0–26.0	15.0–18.0
Phosphorus, max	0.030	0.015
Sulfur, max	0.015	0.020
Aluminum plus titanium, max	...	0.50
Copper, max	0.50	0.35
Boron, max	0.006	0.010
Nickel	remainder	remainder
Aluminum, max	0.50	...

TABLE 2
MECHANICAL PROPERTIES FOR PLATE AND SHEET

UNS	Tensile Strength, min, ksi (MPa)	Yield Strength (0.2 % Offset), min, ksi (MPa)	Elongation in 2 in. (50.8 mm) or $4D^A$ min, %
N10003	100 (690)	40 (280)	40
N10242	105 (725)	45 (310)	40

[A] *D* refers to the diameter of the tension specimen.

TABLE 3
GRAIN SIZE FOR ANNEALED SHEETS

Thickness, in. (mm)	ASTM Micrograin Size Number, max	Average Grain Diameter, max, in (mm)
0.125 (3.175) and under	3.0	0.0050 (0.127)
Over 0.125 (3.175)	1.5	0.0084 (0.214)

6.2 *Grain Size for Sheet and Strip* — Sheet and strip shall conform to the grain size requirements given in Table 3.

7. Dimensions and Permissible Variations

7.1 *Weight* — For calculation of mass or weight, the following densities shall be used:

Alloy	lb/in^3	g/cm^3
N10003	0.317	8.78
N10242	0.327	9.05

TABLE 4
PERMISSIBLE VARIATIONS IN THICKNESS OF PLATE[A]

Specified thickness, in. (mm)	Permissible Variations in Thickness, in. (mm)[B, C] Plus	Minus
3/16 to 7/32 (4.762 to 5.556), incl	0.021 (0.53)	0.010 (0.25)
Over 7/32 to 1/4 (5.556 to 6.350), incl	0.024 (0.61)	0.010 (0.25)
Over 1/4 to 3/8 (6.350 to 9.525), incl	0.027 (0.69)	0.010 (0.25)
Over 3/8 to 1/2 (9.525 to 12.70), incl	0.030 (0.76)	0.010 (0.25)
Over 1/2 to 5/8 (12.70 to 15.88), incl	0.035 (0.89)	0.010 (0.25)
Over 5/8 to 3/4 (15.88 to 19.05), incl	0.040 (1.02)	0.010 (0.25)
Over 3/4 to 7/8 (19.05 to 22.25), incl	0.045 (1.14)	0.010 (0.25)
Over 7/8 to 1 (22.25 to 25.4), incl	0.050 (1.27)	0.010 (0.25)
Over 1 to 2 1/2 (25.4 to 63.5), incl	5[D]	0.010 (0.25)

[A] Applicable to plate 48 in. (1.22 m) and under in width.
[B] Measured 3/8 in. (9.525 mm) or more from any edge.
[C] Buffing or grinding for removal of light surface imperfections shall be permitted. The depth of such buffed or ground areas shall not exceed the minimum tolerance thickness.
[D] Expressed as percentage of thickness.

7.2 *Thickness:*

7.2.1 *Plate* — The permissible variations in thickness of plate shall be as prescribed in Table 4.

7.2.2 *Sheet and Strip* — The permissible variations in thickness of sheet and strip shall be as prescribed in Table 5. The thickness shall be measured with the micrometer spindle 3/8 in. (9.525 mm) or more from any edge for material 1 in. (25.4 mm) or over in width and at any place on material under 1 in. in width.

7.3 *Width:*

7.3.1 *Plate* — The permissible variations in width of rectangular plates shall be as prescribed in Table 6.

7.3.2 *Sheet and Strip* — The permissible variations in width for sheet and strip shall be as prescribed in Table 7.

7.4 *Length:*

7.4.1 *Plate* — Permissible variations in the length of rectangular plate shall be as prescribed in Table 6.

7.4.2 *Sheet and Strip* — Sheet and strip may be ordered to cut lengths, in which case a variation of 1/8 in. (3.175 mm) over the specified length shall be permitted, with a 0 minus tolerance.

TABLE 5
PERMISSIBLE VARIATIONS IN THICKNESS OF SHEET[A] AND STRIP

Specified Thickness, in. (mm)	Permissible Variations in Thickness, in[B,C] (mm) (All Widths)	
	Plus	Minus
0.020 to 0.034 (0.51 to 0.86), incl	0.004 (0.10)	0.004 (0.10)
Over 0.034 to 0.056 (0.86 to 1.42), incl	0.005 (0.13)	0.005 (0.13)
Over 0.056 to 0.070 (1.42 to 1.78), incl	0.006 (0.15)	0.006 (0.15)
Over 0.070 to 0.078 (1.78 to 1.98), incl	0.007 (0.18)	0.007 (0.18)
Over 0.078 to 0.093 (1.98 to 2.36), incl	0.008 (0.20)	0.008 (0.20)
Over 0.093 to 0.109 (2.36 to 2.77), incl	0.009 (0.23)	0.009 (0.23)
Over 0.109 to 0.125 (2.77 to 3.18), incl	0.010 (0.25)	0.010 (0.25)
Over 0.125 to 0.140 (3.18 to 3.56), incl	0.013 (0.33)	0.010 (0.25)
Over 0.140 to 0.171 (3.56 to 4.34), incl	0.016 (0.41)	0.010 (0.25)
Over 0.171 to 0.187 (4.34 to 4.5), incl	0.018 (0.46)	0.010 (0.25)

[A] Applicable to sheet 48 in. (1.22 m) and under in width.
[B] Measured $\frac{3}{8}$ in. (9.525 mm) or more from any edge.
[C] Buffing for removal of light surface imperfections shall be permitted. The depth of such buffed areas shall not exceed the permissible minus variation.

7.5 *Straightness:*

7.5.1 The edgewise curvature (depth of chord) of flat sheet, strip, and plate shall not exceed the product of 0.05 in. multiplied by the length in feet (0.04 mm) multiplied by the length in centimetres.

7.5.2 Straightness for coiled strip is subject to agreement between the manufacturer and the purchaser.

7.6 *Squareness (Sheet)* — For sheets of all thicknesses and widths of 6 in. (152.4 mm) or more, the angle between adjacent sides shall be 90 ± 0.15 deg ($\frac{1}{16}$ in. in 24 in. or 2.6 mm/m).

7.7 *Flatness* — Plate, sheet, and strip shall be commercially flat.

7.8 *Edges:*

7.8.1 Plate shall have sheared or abrasive cut edges.

7.8.2 Sheet and strip shall have sheared or slit edges.

TABLE 6
PERMISSIBLE VARIATIONS IN WIDTH AND LENGTH OF SHEARED OR ABRASIVE CUT RECTANGULAR PLATE

Specified Thickness	Permissible Variations in Widths and Lengths for Dimensions Given, in. (mm)			
	Up to 30 (760), incl		Over 30 (760)	
	Plus	Minus	Plus	Minus
	Inches			
Sheared				
$\frac{3}{16}$ to $\frac{5}{16}$, excl	$\frac{3}{16}$	$\frac{1}{8}$	$\frac{1}{4}$	$\frac{1}{8}$
$\frac{5}{16}$ to $\frac{1}{2}$, incl	$\frac{1}{4}$	$\frac{1}{8}$	$\frac{3}{8}$	$\frac{1}{8}$
Abrasive cut				
$\frac{3}{16}$ to $1\frac{1}{2}$, incl	$\frac{1}{16}$	$\frac{1}{16}$	$\frac{1}{16}$	$\frac{1}{16}$
Over $1\frac{1}{2}$ to $2\frac{1}{2}$, incl	$\frac{1}{8}$	$\frac{1}{8}$	$\frac{1}{8}$	$\frac{1}{8}$
	Millimetres			
Sheared				
4.76 to 7.94, excl	4.76	3.18	6.35	3.18
7.94 to 12.70, incl	6.35	3.18	9.52	3.18
Abrasive cut				
4.76 to 38.1, incl	1.59	1.59	1.59	1.59
Over 38.1 to 63.5, incl	3.18	3.18	3.18	3.18

8. Workmanship, Finish, and Appearance

8.1 The material shall be uniform in quality and condition, smooth, and free of injurious imperfections.

9. Sampling

9.1 *Lots for Chemical Analysis and Mechanical Testing:*

9.1.1 A lot for chemical analysis shall consist of one heat.

9.1.2 A lot of plate, sheet, or strip for mechanical testing shall be defined as the material from one heat in the same condition and specified thickness.

9.2 *Sampling for Chemical Analysis:*

9.2.1 A representative sample shall be obtained from each heat during pouring or subsequent processing.

9.2.2 Product (check) analysis shall be wholly the responsibility of the purchaser.

9.3 *Sampling for Mechanical Testing* — Representative samples shall be taken from each lot of finished material.

10. Number of Tests

10.1 *Chemical Analysis* — One test per lot.

10.2 *Tension Tests* — One test per lot.

TABLE 7
PERMISSIBLE VARIATIONS IN WIDTH OF SHEET AND STRIP

Specified Thickness, in. (mm)	Specified Width, in. (mm)	Permissible Variations in Specified Width, in. (mm) Plus	Minus
	Sheet		
0.187 (4.76) and under	2 (50.8) and over	0.125 (3.18)	0
	Strip (Slit Edges)		
Over 0.020 to 0.075 (0.51 to 1.90), incl	24 (610) and under	0.007 (0.18)	0.007 (0.18)
Over 0.075 to 0.100 (1.90 to 2.54), incl	24 (610) and under	0.009 (0.23)	0.009 (0.23)
Over 0.100 to 0.125 (2.54 to 3.18), incl	24 (610) and under	0.012 (0.30)	0.012 (0.30)

10.3 *Grain Size* — One test per lot.

10.4 *Retests* — If one of the specimens used in the above tests of any lot fails to meet the specified requirements, two additional specimens shall be taken from different sample pieces and tested. The results of the tests on both of these specimens shall meet the specified requirements.

11. Specimen Preparation

11.1 Tension test specimens shall be taken from material in the final condition and tested transverse to the direction of rolling when width will permit.

11.2 Tension test specimens shall be any of the standard or subsize specimens shown in Test Methods E 8.

11.3 In the event of disagreement, referee specimens shall be as follows:

11.3.1 Full thickness of the material, machined to the form and dimensions shown for the sheet-type specimen in Test Methods E 8 for material under ½ in. (12.7 mm) in thickness.

11.3.2 The largest possible round specimen shown in Test Methods E 8 for material ½ in. (12.7 mm) and over.

12. Test Methods

12.1 The chemical composition and mechanical properties of the material as enumerated in this specification shall be determined, in case of disagreement, in accordance with the following ASTM methods:

12.1.1 *Chemical Analysis* — Test Methods E 1473. The nickel composition shall be determined arithmetically by difference.

12.1.2 *Tension Test* — Test Methods E 8.

12.1.3 *Grain Size* — Test Methods E 112, Plate 1 shall be used for the comparison procedure.

12.1.4 *Determining Significant Places* — Practice E 29.

12.2 For purposes of determining compliance with the limits in this specification, an observed value or a calculated value shall be rounded in accordance with the rounding method of Practice of E 29:

Properties	Rounded Unit for Observed or Calculated Value
Chemical composition and tolerances	Nearest unit in the last right-hand place of figures of the specified limit
Tensile strength and yield strength	Nearest 1000 psi (7 MPa)
Elongation	Nearest 1%

13. Inspection

13.1 Inspection of the material by the purchaser at the place of manufacture shall be made as agreed upon between the purchaser and the manufacturer as part of the purchase contract.

14. Rejection and Rehearing

14.1 Material tested by the purchaser that fails to conform to the requirements of this specification may be rejected. Rejection should be reported to the producer or supplier promptly and in writing. In case of dissatisfaction with the results of the test, the producer or supplier may make claim for a rehearing.

15. Certification

15.1 The manufacturer's certification shall be furnished to the purchaser stating that material has been

manufactured, tested, and inspected in accordance with this specification, and that the test results on representative samples meet specification requirements. A report of the test results shall be furnished.

16. Product Marking

16.1 Each plate, sheet, or strip shall be marked on one face with the specification number, heat number, manufacturer's identification, and size. The markings shall have no deleterious effect on the material or its performance and shall be sufficiently stable to withstand normal handling.

16.2 Each bundle or shipping container shall be marked with the name of the material; this specification number; the size; gross, tare, and net weight; consignor and consignee address; contract or order number; and such other information as may be defined in the contract or order.

17. Keywords

17.1 plate; sheet; strip; UNS N10003; UNS N10242

APPENDIX

(Nonmandatory Information)

X1. HEAT TREATMENT

X1.1 Proper heat treatment during or subsequent to fabrication is necessary for optimum performance, and the manufacturer shall be consulted for details.

SPECIFICATION FOR UNS N06002, UNS N06230, UNS N12160, AND UNS R30556 PLATE, SHEET, AND STRIP

SB-435

(Identical with ASTM Specification B 435-97 except that certification has been made mandatory.)

1. Scope

1.1 This specification covers alloys UNS N06002, UNS N06230, UNS N12160, and UNS R30556 in the form of rolled plate, sheet, and strip for heat-resisting and general corrosive service.

1.2 The following products are covered under this specification:

1.2.1 *Sheet and Strip* — Hot- or cold-rolled, annealed, and descaled unless solution annealing is performed in an atmosphere yielding a bright finish.

1.2.2 *Plate* — Hot-rolled, solution-annealed, and descaled.

1.3 The values stated in inch-pound units are to be regarded as the standard. The values given in parentheses are for information only.

2. Referenced Documents

2.1 *ASTM Standards:*

E 8 Test Methods for Tension Testing of Metallic Materials

E 29 Practice for Using Significant Digits in Test Data to Determine Conformance With Specifications

E 55 Practice for Sampling Wrought Nonferrous Metals and Alloys for Determination of Chemical Composition

E 112 Test Methods for Determining the Average Grain Size

E 354 Test Methods for Chemical Analysis of High-Temperature, Electrical, Magnetic, and Other Similar Iron, Nickel, and Cobalt Alloys

3. Terminology

3.1 *Descriptions of Terms Specific to This Standard:*

3.1.1 *plate* — material $^{3}/_{16}$ in. (4.76 mm) and over in thickness.

3.1.2 *sheet and strip* — material under $^{3}/_{16}$ in. (4.76 mm) in thickness.

4. Ordering Information

4.1 Orders for material under this specification shall include the following information:

4.1.1 *Alloy,*

4.1.2 *Dimensions* — Thickness (in decimals of an inch), width, and length (inch or fraction of an inch),

4.1.3 *Certification* — Certification and a report of test results are required (Section 15),

4.1.4 *Optional Requirement* — Plate; state how plate is to be cut (see 7.8.1 and Table 7),

4.1.5 *Purchase Inspection* — State which tests or inspections are to be witnessed (Section 13), and

4.1.6 *Samples for Product (Check) Analysis* — State whether samples shall be furnished (9.2.2).

5. Chemical Composition

5.1 The material shall conform to the requirements as to chemical composition prescribed in Table 1.

5.2 If a product (check) analysis is made by the purchaser, the material shall conform to the requirements specified in Table 1 subject to the permissible tolerances in Table 2.

6. Mechanical Properties and Other Requirements

6.1 *Tensile Properties* — The material shall conform to the room temperature tensile properties prescribed in Table 3.

TABLE 1
CHEMICAL REQUIREMENTS

Element	Composition Limits, %			
	UNS N06002	UNS N06230	UNS R30556	UNS N12160
Nickel	remainder[A]	remainder[A]	19.0–22.5	remainder[A]
Iron	17.0–22.0	3.0 max	remainder[A]	3.5 max
Chromium	20.5–23.0	20.0–24.0	21.0–23.0	26.0–30.0
Cobalt	0.5–2.5	5.0 max	16.0–21.0	27.0–33.0
Molybdenum	8.0–10.0	1.0–3.00	2.5–4.0	1.0 max
Tungsten	0.2–1.0	13.0–15.0	2.0–3.5	1.0 max
Carbon	0.05–0.15	0.05–0.15	0.05–0.15	0.15 max
Silicon	1.00 max	0.25–0.75	0.20–0.80	2.4–3.0
Manganese	1.00 max	0.30–1.00	0.50–2.00	1.5 max
Phosphorus	0.04 max	0.030 max	0.04 max	0.030 max
Sulfur	0.03 max	0.015 max	0.015 max	0.015 max
Columbium (Nb)	...	...	0.30 max	1.0 max
Tantalum	...	...	0.30–1.25	...
Aluminum	...	0.20–0.50	0.10–0.50	...
Zirconium	...	...	0.001–0.10	...
Lanthanum	...	0.005–0.050	0.005–0.10	...
Nitrogen	...	...	0.10–0.30	...
Boron	...	0.015 max	0.02 max	...
Titanium	...	...	...	0.20–0.80

[A] See 12.1.1.

6.2 *Grain Size for Sheet and Strip:*

6.2.1 Annealed alloys UNS N06002, UNS N06230, and UNS R30556 sheet and strip shall conform to the grain size requirements given in Table 4.

6.2.2 Annealed alloy UNS N12160 shall conform to an average grain size of ASTM No. 5 or coarser.

7. Dimensions, Mass, and Permissible Variations

7.1 *Weight* — For calculations of mass or weight, the following densities shall be used:

Alloy	Density	
	lb/in.^{3}	g/cm^3
N06002	0.297	(8.23)
N06230	0.319	(8.83)
R30556	0.297	(8.23)
N12160	0.292	(8.08)

7.2 *Thickness:*

7.2.1 *Plate* — The permissible variations in thickness of plate shall be as prescribed in Table 5.

7.2.2 *Sheet and Strip* — The permissible variations in thickness of sheet and strip shall be as prescribed in Table 6. The thickness shall be measured with the micrometer spindle $\frac{3}{8}$ in. (9.525 mm) or more from any edge for material 1 in. (25.4 mm) or over in width and at any place on material under 1 in. in width.

7.3 *Width:*

7.3.1 *Plate* — The permissible variations in width of rectangular plates shall be as prescribed in Table 7.

7.3.2 *Sheet and Strip* — The permissible variations in width for sheet and strip shall be as prescribed in Table 8.

7.4 *Length:*

7.4.1 *Plate* — Permissible variations in the length of rectangular plate shall be as prescribed in Table 7.

7.4.2 *Sheet and Strip* — Sheet and strip may be ordered to cut lengths, in which case a variation of $\frac{1}{8}$ in. (3.175 mm) over the specified length shall be permitted, with a 0 minus tolerance.

7.5 *Straightness:*

7.5.1 The edgewise curvature (depth of chord) of flat sheet, strip, and plate shall not exceed the product of 0.05 in. multiplied by the length in feet (0.04 mm multiplied by the length in centimetres).

7.5.2 Straightness for coiled strip is subject to agreement between the manufacturer and the purchaser.

7.6 *Squareness (Sheet)* — For sheets of all thicknesses and widths of 6 in. (152.4 mm) or more, the angle between adjacent sides shall be 90 ± 0.15 deg. ($\frac{1}{16}$ in. in 24 in. or 2.6 mm/m).

7.7 *Flatness* — Plate, sheet, and strip shall be commercially flat.

TABLE 2
PRODUCT (CHECK) ANALYSIS TOLERANCE

Element	Tolerance Over the Maximum or Under the Minimum Limit, %			
	UNS N06002	UNS N06230	UNS R30556	UNS N12160
Nickel	...	...	0.20 under min 0.25 over max	...
Iron	0.30	0.07 over max	...	0.07 over max
Chromium	0.25	0.25	0.25	0.30
Cobalt	0.03 under min 0.05 over max	0.05 over max	0.20 under min 0.25 over max	0.30 under min 0.35 over max
Molybdenum	0.15	0.03 under min 0.05 over max	0.05 under min 0.10 over max	0.03 over max
Tungsten	0.04	0.25	0.10 under min 0.15 over max	0.04 over max
Carbon	0.01	0.01	0.01	0.01 over max
Silicon	0.05	0.02 under min 0.05 over max	0.02 under min 0.05 over max	0.10
Manganese	0.03	0.03	0.03 under min 0.04 over max	0.04 over max
Phosphorus	0.005	0.005	0.005	0.005
Sulfur	0.005	0.003	0.003	0.003
Columbium (Nb) + tantalum	...	...	0.05	0.05 over max
Aluminum	...	0.05	0.02 under min 0.05 over max	...
Lanthanum	...	0.005	...	...
Boron	...	0.005	...	...
Titanium, under min over max	... ...	... ...	... ...	 0.03 0.04

7.8 *Edges:*

7.8.1 Plates shall have sheared, abrasive-cut or plasma-torch-cut edges as specified.

7.8.2 Sheet and strip shall have sheared or slit edges.

8. Workmanship, Finish, and Appearance

8.1 The material shall be uniform in quality and condition, smooth, and free of injurious defects.

9. Sampling

9.1 *Lots for Chemical Analysis and Mechanical Testing:*

9.1.1 A lot for chemical analysis shall consist of one heat.

9.1.2 A lot of plate, sheet, or strip for mechanical testing shall be defined as the material from one heat in the same condition and specified thickness.

TABLE 3
MECHANICAL PROPERTY REQUIREMENTS

UNS	Tensile Strength, min, ksi (MPa)	Yield Strength (0.2% Offset), min, ksi (MPa)	Elongation in 2 in. (50.8 mm) or 4D,[A] min, %
N06002	95 (655)	35 (240)	35
N06230[B]	110 (760)	45 (310)	40
R30556[C]	100 (690)	45 (310)	40
N12160[D]	90 (670)	35 (240)	40

[A] D refers the diameter of the tension specimen.
[B] Solution annealed at a temperature between 2200 and 2275°F (1204 and 1246°C) followed by water quench or rapidly cooled by other means.
[C] Solution annealed at 2100°F (1150°C) minimum.
[D] Solution annealed at 1950°F (1065°C) minimum.

TABLE 4
GRAIN SIZE FOR ANNEALED SHEET

Thickness, in. (mm)	ASTM Micrograin Size Number, max	Average Grain, Diameter, max, in. (mm)
0.125 (3.175) and under	3.0	0.0050 (0.127)
Over 0.125 (3.175)	1.5	0.0084 (0.214)

9.2 *Sampling for Chemical Analysis:*

9.2.1 A representative sample shall be obtained from each heat during pouring or subsequent processing.

9.2.2 Product (check) analysis shall be wholly the responsibility of the purchaser.

9.3 *Sampling for Mechanical Testing* — Representative samples shall be taken from each lot of finished material.

10. Number of Tests and Retests

10.1 *Chemical Analysis* — One test per heat.

10.2 *Tension Tests* — One test per lot.

10.3 *Grain Size* — One test per lot.

10.4 *Retests* — If one of the specimens used in the above tests of any lot fails to meet the specified requirements, two additional specimens shall be taken from different sample pieces and tested. The results of the tests on both of these specimens shall meet the specified requirements.

11. Specimen Preparation

11.1 Tension test specimens shall be taken from material in the final condition and tested transverse to the

TABLE 5
PERMISSIBLE VARIATIONS IN THICKNESS OF PLATE [A]

Specified Thickness, in. (mm)	Permissible Variations in Thickness, in. (mm)[B,C] +	−
3/16 to 7/32 (4.762 to 5.556), incl	0.021 (0.53)	0.010 (0.25)
Over 7/32 to 1/4 (5.556 to 6.350) incl	0.024 (0.61)	0.010 (0.25)
Over 1/4 to 3/8 (6.350 to 9.525), incl	0.027 (0.69)	0.010 (0.25)
Over 3/8 to 1/2 (9.525 to 12.70), incl	0.030 (0.76)	0.010 (0.25)
Over 1/2 to 5/8 (12.70 to 15.88), incl	0.035 (0.89)	0.010 (0.25)
Over 5/8 to 3/4 (15.88 to 19.05), incl	0.040 (1.02)	0.010 (0.25)
Over 3/4 to 7/8 (19.05 to 22.22), incl	0.045 (1.14)	0.010 (0.25)
Over 7/8 to 1 (22.22 to 25.4), incl	0.050 (1.27)	0.010 (0.25)
Over 1 to 2 1/2 (25.4 to 63.5), incl	5[D]	0.010 (0.25)

[A] Applicable to plate 48 in. (1.22 m) and under in width.
[B] Measured 3/8 in. (9.525 mm) or more from any edge.
[C] Buffing or grinding for removal of light surface imperfections shall be permitted. The depth of such buffed or ground areas shall not exceed the minimum tolerance thickness.
[D] Expressed as percentage of thickness.

TABLE 6
PERMISSIBLE VARIATIONS IN THICKNESS OF SHEET[A] AND STRIP

Specified Thickness, in. (mm)	Permissible Variations in Thickness in.[B,C] (mm) (All Widths)	
	+	−
0.020 to 0.034 (0.51 to 0.86), incl	0.004 (0.10)	0.004 (0.10)
Over 0.034 to 0.056 (0.86 to 1.42), incl	0.005 (0.13)	0.005 (0.13)
Over 0.056 to 0.070 (1.42 to 1.78), incl	0.006 (0.15)	0.006 (0.15)
Over 0.070 to 0.078 (1.78 to 1.98), incl	0.007 (0.18)	0.007 (0.18)
Over 0.078 to 0.093 (1.98 to 2.36), incl	0.008 (0.20)	0.008 (0.20)
Over 0.093 to 0.109 (2.36 to 2.77), incl	0.009 (0.23)	0.009 (0.23)
Over 0.109 to 0.125 (2.77 to 3.18), incl	0.010 (0.25)	0.010 (0.25)
Over 0.125 to 0.140 (3.18 to 3.56), incl	0.013 (0.33)	0.010 (0.25)
Over 0.140 to 0.171 (3.56 to 4.34), incl	0.016 (0.41)	0.010 (0.25)
Over 0.171 to 0.187 (4.34 to 4.75), incl	0.018 (0.46)	0.010 (0.25)

[A] Applicable to sheet 48 in. (1.22 m) and under in width.
[B] Measured 3/8 in. (9.525 mm) or more from any edge.
[C] Buffing for removal of light surface imperfections shall be permitted. The depth of such buffed areas shall not exceed the permissible minus variation.

TABLE 7
PERMISSIBLE VARIATIONS IN WIDTH AND LENGTH OF SHEARED, PLASMA TORCH-CUT, OR ABRASIVE-CUT RECTANGULAR PLATE

Specified Thickness	Permissible Variations in Widths and Lengths for Dimensions Given, in. (mm)			
	Up to 30 (760), incl		Over 30 (760)	
	+	−	+	−
Inches				
Sheared:				
3/16 to 5/16, excl	3/16	1/8	1/4	1/8
5/16 to 1/2, incl	1/4	1/8	3/8	1/8
Abrasive-cut:				
3/16 to 1 1/2, incl	1/16	1/16	1/16	1/16
Over 1 1/2 to 2 1/2, incl	1/8	1/8	1/8	1/8
Plasma torch-cut:[A]				
3/16 to 2, excl	1/2	0	1/2	0
2 to 3, incl	5/8	0	5/8	0
Millimetres				
Sheared:				
4.76 to 7.94, excl	4.76	3.18	6.35	3.18
7.94 to 12.70, incl	6.35	3.18	9.52	3.18
Abrasive-cut:				
4.76 to 38.1, incl	1.59	1.59	1.59	1.59
Over 38.1 to 63.5, incl	3.18	3.18	3.18	3.18
Plasma torch-cut:[A]				
4.8 to 50.8, excl	12.7	0	12.7	0
50.8 to 76.2, incl	15.9	0	15.9	0

[A] The tolerance spread shown for plasma torch cutting may be obtained all on the minus side, or divided between the plus and the minus side if so specified by the purchaser.

direction of rolling when width will permit.

11.2 Tension test specimens shall be any of the standard or subsize specimens shown in Test Methods E 8.

11.3 In the event of disagreement, referee specimens shall be as follows:

11.3.1 Full thickness of the material, machined to the form and dimensions shown for the sheet-type specimen in Test Methods E 8 for material under 1/2 in. (12.7 mm) in thickness.

11.3.2 The largest possible round specimen shown in Test Methods E 8 for material 1/2 in. (12.7 mm) and over.

12. Test Methods

12.1 The chemical composition and mechanical properties of the material as enumerated in this specification shall be determined, in case of disagreement, in accordance with the following ASTM methods:

12.1.1 *Chemical Analysis* — Test Methods E 354. For elements not covered by Test Methods E 354, the referee method shall be as agreed upon between the manufacturer and the purchaser. The composition of the remainder element shall be determined arithmetically by difference.

12.1.2 *Tension Test* — Test Methods E 8.

12.1.3 *Grain Size* — Test Methods E 112. Plate 1 shall be used for the comparison procedure.

12.1.4 *Determining Significant Places* — Practice E 29.

TABLE 8
PERMISSIBLE VARIATIONS IN WIDTH OF SHEET AND STRIP

Specified Thickness, in. (mm)	Specified Width, in. (mm)	Permissible Variations in Specified Width, in. (mm) +	–
	Sheet		
0.187 (4.76) and under	2 (50.8) and over	0.125 (3.18)	0
	Strip (Slit Edges)		
Over 0.020 to 0.075 (0.51 to 1.90), incl	24 (610) and under	0.007 (0.18)	0.007 (0.18)
Over 0.075 to 0.100 (1.90 to 2.54), incl	24 (610) and under	0.009 (0.23)	0.009 (0.23)
Over 0.100 to 0.125 (2.54 to 3.18), incl	24 (610) and under	0.012 (0.30)	0.012 (0.30)

12.1.5 *Method of Sampling* — Practice E 55.

12.2 For purposes of determining compliance with the limits in this specification, an observed or calculated value shall be rounded in accordance with the rounding method of Practice E 29:

Properties	Rounded Unit for Observed or Calculated Value
Chemical composition and tolerances	Nearest unit in the last right-hand place of figures of the specified limit
Tensile strength and yield strength	Nearest 1000 psi (7 MPa)
Elongation	Nearest 1%

13. Inspection

13.1 Inspection of the material by the purchaser at the place of manufacture shall be made as agreed upon between the purchaser and the manufacturer as part of the purchase contract.

14. Rejection and Rehearing

14.1 Material tested by the purchaser that fails to conform to the requirements of this specification may be rejected. Rejection should be reported to the producer or supplier promptly and in writing. In case of dissatisfaction with the results of the test, the producer or supplier may make claim for a rehearing.

15. Certification

15.1 A manufacturer's certification shall be furnished to the purchaser stating that material has been manufactured, tested, and inspected in accordance with this specification, and that the test results on representative samples meet specification requirements. A report of the test results shall be furnished.

16. Product Marking

16.1 Each plate, sheet, or strip shall be marked on one face with the specification number, alloy, heat number, manufacturer's identification, and size. The markings shall have no deleterious effect on the material or its performance and shall be sufficiently stable to withstand normal handling.

16.2 Each bundle or shipping container shall be marked with the name of the material; this specification number; alloy; the size; gross, tare, and net weight; consignor and consignee address; contract or order number; and such other information as may be defined in the contract or order.

APPENDIX

(Nonmandatory Information)

X1. HEAT TREATMENT

X1.1 Proper heat treatment during or subsequent to fabrication is necessary for optimum performance, and the manufacturer shall be consulted for details.

SPECIFICATION FOR NICKEL-CHROMIUM-MOLYBDENUM-COLUMBIUM ALLOY (UNS N06625) AND NICKEL-CHROMIUM-MOLYBDENUM-SILICON ALLOY (UNS N06219) PLATE, SHEET, AND STRIP

SB-443

(Identical with ASTM Specification B 443-00$^{\epsilon 1}$ except that certification has been made mandatory.)

1. Scope

1.1 This specification covers rolled nickel-chromium-molybdenum-columbium alloy (UNS N06625) and nickel-chromium-molybdenum-silicon alloy (UNS N06219) plate, sheet, and strip.

1.1.1 Alloy UNS N06625 products are furnished in two grades of different heat-treated conditions:

1.1.1.1 *Grade 1 (Annealed)*— Material is normally employed in service temperatures up to 1100°F (593°C).

1.1.1.2 *Grade 2 (Solution Annealed)*— Material is normally employed in service temperatures above 1100°F (593°C) when resistance to creep and rupture is required.

NOTE 1 — Hot-working or reannealing may change properties significantly, depending on working history and temperatures.

1.1.2 Alloy UNS N06219 is supplied in solution annealed condition only.

1.2 The values stated in inch-pound units are to be regarded as the standard. The values given in parentheses are for information only.

2. Referenced Documents

2.1 *ASTM Standards:*

B 446 Specification for Nickel-Chromium-Molybdenum-Columbium Alloy (UNS N06625) Rod and Bar

B 880 Specification for General Requirements for Chemical Check Analysis Limits for Nickel, Nickel Alloys and Cobalt Alloys

E 8 Test Methods for Tension Testing of Metallic Materials

E 29 Practice for Using Significant Digits in Test Data to Determine Conformance with Specifications

E 354 Test Methods for Chemical Analysis of High-Temperature, Electrical, Magnetic, and Other Similar Iron, Nickel, and Cobalt Alloys

E 1473 Test Methods for Chemical Analysis of Nickel, Cobalt, and High-Temperature Alloys

3. Terminology

3.1 *Definitions of Terms Specific to This Standard*— The terms given in Table 1 shall apply.

4. Ordering Information

4.1 It is the responsibility of the purchaser to specify all requirements that are necessary for the safe and satisfactory performance of material ordered under this specification. Examples of such requirements include, but are not limited to, the following:

4.1.1 ASTM designation,

4.1.2 Alloy name or UNS number,

4.1.3 *Condition* — See 1.1.1, 1.1.2 and Appendix X1,

4.1.3.1 If neither grade of N06625 is specified, Grade 1 will be supplied,

4.1.4 *Finish* — Appendix X1,

4.1.5 *Dimensions* — Thickness, width, and length,

TABLE 1
PRODUCT DESCRIPTION

Product	Thickness, in. (mm)	Width, in. (mm)
Hot-rolled plate[A]	$^3/_{16}$ (4.8) and over (Tables 4 and 5)	(Table 7)[A]
Cold-rolled plate[B]	$^3/_{16}$ to $^3/_8$ (4.8 to 9.5), incl (Table 4)	(Table 7)
Hot-rolled sheet[B]	0.018 to 0.250 (0.46 to 6.4), incl (Table 6)	(Table 9)
Cold-rolled sheet[C]	0.018 to 0.250 (0.46 to 6.4), incl (Table 6)	(Table 9)
Cold-rolled strip[C]	0.005 to 0.250 (0.13 to 6.4), incl (Table 6)	(Table 9)

[A] Hot-rolled plate, in widths 10 in. (254 mm) and under, may be furnished as hot-finished rectangles with sheared or cut edges in accordance with Specification B 446 provided the mechanical property requirements of this specification are met.

[B] Material $^3/_{16}$ to $^1/_4$ in. (4.8 to 6.4 mm), incl, in thickness may be furnished as sheet or plate provided the material meets the specification requirements for the condition ordered.

[C] Material under 48 in. (1219 mm) in width may be furnished as sheet or strip provided the material meets the specification requirements for the condition ordered.

4.1.6 *Quantity,*

4.1.7 *Optional Requirements:*

4.1.7.1 *Sheet and Strip* — Whether to be furnished in coil, in cut straight lengths, or in random straight lengths,

4.1.7.2 *Plate* — How plate is to be cut (see 7.2.1 and 7.3.2),

4.1.8 *Certification* — Certification is required (Section 15),

4.1.9 *Samples for Product (Check) Analysis*— Whether samples for product (check) analysis should be furnished (see 5.2), and

4.1.10 *Purchaser Inspection* — If the purchaser wishes to witness tests or inspection of material at place of manufacture, the purchase order must so state, indicating which tests or inspections are to be witnessed (Section 13).

5. Chemical Composition

5.1 The material shall conform to the composition limits specified in Table 2.

5.2 If a product (check) analysis is performed by the purchaser, the material shall conform to the product (check) analysis variations as prescribed by B 880.

TABLE 2 CHEMICAL REQUIREMENTS

Element	Composition Limits, % N06625	Composition Limits, % N06219
Carbon	0.10 max	0.05 max
Manganese	0.50 max	0.50 max
Silicon	0.50 max	0.70–1.10
Phosphorus	0.015 max	0.020 max
Sulfur	0.015 max	0.010 max
Chromium	20.0 min	18.0–22.0
	23.0 max	...
Columbium + tantalum	3.15 min	...
	4.15 max	...
Cobalt (if determined)	1.0 max	1.0 max
Molybdenum	8.0 min	7.0–9.0
	10.0 max	...
Iron	5.0 max	2.0–4.0
Aluminum	0.40 max	0.50 max
Titanium	0.40 max	0.50 max
Copper	...	0.50 max
Nickel[A]	58.0 min	Bal.

[A] Element shall be determined arithmetically by difference.

6. Mechanical Properties and Other Requirements

6.1 *Mechanical Properties* — The material shall conform to the heat treatment and room temperature tensile properties prescribed in Table 3.

7. Dimensions and Permissible Variations

7.1 *Thickness and Weight:*

7.1.1 *Plate*— For plate up to 2 in. (50.8 mm), inclusive, in thickness, the permissible variations under the specified thickness and permissible excess in overweight shall not exceed the amounts prescribed in Table 4.

7.1.1.1 For use with Table 4, plate shall be assumed to weigh 0.305 lb/in.^{3} (8.442 g/cm^3).

7.1.2 *Plate* — For plate over 2 in. (50.8 mm) in thickness, the permissible variations over the specified thickness shall not exceed the amounts prescribed in Table 5.

7.1.3 *Sheet and Strip* — The permissible variations in thickness of sheet and strip shall be as prescribed in Table 6. The thickness of strip and sheet shall be measured with the micrometer spindle $^3/_8$ in. (9.5 mm) or more from either edge for material 1 in. (25.4 mm) or over in width and at any place on the strip under 1 in. (25.4 mm) in width.

7.2 *Width or Diameter:*

7.2.1 *Plate*— The permissible variations in width of rectangular plates and diameter of circular plates shall be as prescribed in Table 7 and Table 8.

TABLE 3
ROOM TEMPERATURE TENSILE PROPERTIES AND HEAT TREATMENT
(All Thicknesses and Sizes Unless Otherwise Indicated)

Product	Tensile Strength, min, ksi (MPa)	Yield Strength[A] (0.2% Offset), min, ksi (MPa)	Elongation in 2 in. or 50 mm (or 4D), min, %[B]
Grade 1 UNS N06625 (Annealed)[C]			
Cold-rolled sheet and strip	120 (827)	60 (414)	30
Hot-rolled sheet and hot-rolled plate up to 2.75 in. (70 mm), incl	110 (758)	55 (379)	30
Cold-rolled plate up to 0.375 in. (9.5 mm), incl	110 (758)	55 (379)	30
Grade 2 UNS N06625 (Solution Annealed)[D]			
Cold-rolled sheet and strip, hot-rolled sheet, cold-rolled plate, and hot-rolled plate	100 (690)	40 (276)	30
All UNS N06219 (Solution Annealed)			
All plate, sheet, and strip	96 (660)	39 (270)	30

[A] Yield strength requirements do not apply to material under 0.020 in. (0.508 mm) in thickness.
[B] Elongation requirements do not apply to material under 0.010 in. (0.254 mm) in thickness.
[C] Annealed at 1600°F (871°C) minimum.
[D] Solution annealed at 2000°F (1093°C) minimum, with or without subsequent stabilization anneal at 1800°F (982°C) minimum to increase resistance to sensitization.

7.2.2 *Sheet and Strip*— The permissible variations in width for sheet and strip shall be as prescribed in Table 9.

7.3 *Length:*

7.3.1 Sheet and strip of all sizes may be ordered to cut lengths, in which case a variation of $\frac{1}{8}$ in. (3.2 mm) over the specified length shall be permitted.

7.3.2 Permissible variations in length of rectangular plate shall be as prescribed in Table 10.

7.4 *Straightness:*

7.4.1 The edgewise curvature (depth of chord) of flat sheet, strip, and plate shall not exceed 0.05 in. (1.27 mm) multiplied by the length in feet (0.04 mm multiplied by the length in centimeters).

7.4.2 Straightness for coiled material is subject to agreement between the manufacturer and the purchaser.

7.5 *Edges:*

7.5.1 Sheet and strip shall have sheared or slit edges.

7.5.2 Plate shall have sheared or cut (machined, abrasive cut, powder cut, or inert arc cut) edges, as specified.

7.6 *Squareness (Sheet)* — For sheets of all thicknesses, the angle between adjacent sides shall be 90 ± 0.15° ($\frac{1}{16}$ in. in 24 in.) (1.6 mm in 610 mm).

7.7 *Flatness* — Standard flatness tolerances for plate shall conform to the requirements of Table 11.

8. Workmanship, Finish, and Appearance

8.1 The material shall be uniform in quality and temper, smooth, commercially straight or flat, and free of injurious imperfections.

9. Sampling

9.1 *Lot — Definition:*

9.1.1 A lot for chemical analysis shall consist of one heat.

9.1.2 A lot for mechanical testing shall consist of all material from the same heat, nominal thickness, and condition.

9.1.2.1 Where material cannot be identified by heat, a lot shall consist of not more than 500 lb (227 kg) of material in the same thickness and condition, except

TABLE 4
PERMISSIBLE VARIATIONS IN THICKNESS AND OVERWEIGHT OF RECTANGULAR PLATES

Specified Thickness, in. (mm)	Permissible Excess in Average Weight,[B,C] per Square Foot of Plates for Widths Given in Inches (Millimeters) Expressed in Percent of Nominal Weights									
	Under 48 (1220)	48 to 60 (1220 to 1520), excl	60 to 72 (1520 to 1830), excl	72 to 84 (1830 to 2130), excl	84 to 96 (2130 to 2440), excl	96 to 108 (2440 to 2740), excl	108 to 120 2740 to 3050), excl	120 to 132 (3050 to 3350), excl	132 to 144 (3350 to 3660), excl	144 to 160 (3660 to 4070), excl
3/16 to 5/16 (4.8 to 7.9), excl	9.0	10.5	12.0	13.5	15.0	16.5	18.0	...	...	...
5/16 to 3/8 (7.9 to 9.5), excl	7.5	9.0	10.5	12.0	13.5	15.0	16.5	18.0	...	...
3/8 to 7/16 (9.5 to 11.1), excl	7.0	7.5	9.0	10.5	12.0	13.5	15.0	16.5	18.0	19.5
7/16 to 1/2 (11.1 to 12.7), excl	6.0	7.0	7.5	9.0	10.5	12.0	13.5	15.0	16.5	18.0
1/2 to 5/8 (12.7 to 15.9), excl	5.0	6.0	7.0	7.5	9.0	10.5	12.0	13.5	15.0	16.5
5/8 to 3/4 (15.9 to 19.1), excl	4.5	5.5	6.0	7.0	7.5	9.0	10.5	12.0	13.5	15.0
3/4 to 1 (19.1 to 25.4), excl	4.0	4.5	5.5	6.0	7.0	7.5	9.0	10.5	12.0	13.5
1 to 2 (25.4 to 50.8), incl	4.0	4.0	4.5	5.5	6.0	7.0	7.5	9.0	10.5	12.0

NOTE 1 — All plates shall be ordered to thickness and not to weight per square foot. No plates shall vary more than 0.01 in. (0.3 mm) under the thickness ordered, and the overweight of each lot[A] in each shipment shall not exceed the amount given in the table. Spot grinding is permitted to remove surface imperfections, such spots not to exceed 0.01 in. (0.3 mm) under the specified thickness.

[A] The term "lot" applied to this table means all of the plates of each group width and each group thickness.
[B] The permissible overweight for lots of circular and sketch plates shall be 25% greater than the amounts given in this table.
[C] The weight of individual plates shall not exceed the nominal weight by more than 1¼ times the amount given in the table and Footnote B.

TABLE 5
PERMISSIBLE VARIATIONS IN THICKNESS FOR RECTANGULAR PLATES OVER 2 in. (51 mm) IN THICKNESS

	Permissible Variations, in. (mm), Over Specified Thickness for Widths Given, in. (mm)					
Specified Thickness, in. (mm)	To 36 (915), excl	36 to 60 (915 to 1520), excl	60 to 84 (1520 to 2130), excl	84 to 120 (2130 to 3050), excl	120 to 132 (3050 to 3350), excl	132 (3350 and over)
Over 2 to $2^3/_4$ (51 to 69.8), incl	$^1/_{16}$ (1.6)	$^3/_{32}$ (2.4)	$^7/_{64}$ (2.8)	$^1/_8$ (3.2)	$^1/_8$ (3.2)	$^9/_{64}$ (3.6)

NOTE 1 — Permissible variation under specified thickness, 0.01 in. (0.3 mm).

TABLE 6
PERMISSIBLE VARIATIONS IN THICKNESS OF SHEET AND STRIP
[Permissible Variations, Plus and Minus, in Thickness, in. (mm), for Widths Given in in. (mm)]

	Sheet[A]			
	Hot-Rolled		Cold-Rolled	
Specified Thickness, in. (mm), incl	48 (1220) and Under	Over 48 to 60 (1220 to 1520), incl	48 (1220) and Under	Over 48 to 60 (1220 to 1520), incl
0.018 to 0.025 (0.5 to 0.6)	0.003 (0.08)	0.004 (0.10)	0.002 (0.05)	0.003 (0.08)
Over 0.025 to 0.034 (0.6 to 0.9)	0.004 (0.10)	0.005 (0.13)	0.003 (0.08)	0.004 (0.10)
Over 0.034 to 0.043 (0.9 to 1.1)	0.005 (0.13)	0.006 (0.15)	0.004 (0.10)	0.005 (0.13)
Over 0.043 to 0.056 (1.1 to 1.4)	0.005 (0.13)	0.006 (0.15)	0.004 (0.10)	0.005 (0.13)
Over 0.056 to 0.070 (1.4 to 1.8)	0.006 (0.15)	0.007 (0.18)	0.005 (0.13)	0.006 (0.15)
Over 0.070 to 0.078 (1.8 to 1.9)	0.007 (0.18)	0.008 (0.20)	0.006 (0.15)	0.007 (0.18)
Over 0.078 to 0.093 (1.9 to 2.4)	0.008 (0.20)	0.009 (0.23)	0.007 (0.18)	0.008 (0.20)
Over 0.093 to 0.109 (2.4 to 2.8)	0.009 (0.23)	0.010 (0.25)	0.007 (0.18)	0.009 (0.23)
Over 0.109 to 0.125 (2.8 to 3.2)	0.010 (0.25)	0.012 (0.31)	0.008 (0.20)	0.010 (0.25)
Over 0.125 to 0.140 (3.2 to 3.6)	0.012 (0.31)	0.014 (0.36)	0.008 (0.20)	0.010 (0.25)
Over 0.140 to 0.171 (3.6 to 4.3)	0.014 (0.36)	0.016 (0.41)	0.009 (0.23)	0.012 (0.31)
Over 0.171 to 0.187 (4.3 to 4.8)	0.015 (0.38)	0.017 (0.43)	0.010 (0.25)	0.013 (0.33)
Over 0.187 to 0.218 (4.8 to 5.5)	0.017 (0.43)	0.019 (0.48)	0.011 (0.28)	0.015 (0.38)
Over 0.218 to 0.234 (5.5 to 5.9)	0.018 (0.46)	0.020 (0.51)	0.012 (0.31)	0.016 (0.41)
Over 0.234 to 0.250 (5.9 to 6.4)	0.020 (0.51)	0.022 (0.56)	0.013 (0.33)	0.018 (0.46)

	Cold-Rolled[A,B]
Specified Thickness, in. (mm), incl	Widths 12 in. (305 mm) and under, plus and minus
Up to 0.050 (1.27), incl	0.0015 (0.038)
Over 0.050 to 0.093 (1.27 to 2.39)	0.0025 (0.063)
Over 0.093 to 0.125 (2.39 to 3.18)	0.004 (0.11)

[A] Measured $^3/_8$ in. (9.5 mm) or more from either edge except for strip under 1 in. (25.4 mm) in width which is measured at any place.
[B] Standard sheet tolerances apply for thicknesses over 0.125 in. (3.2 mm) and for all thicknesses of strip over 12 in. (305 mm) wide.

for plates weighing over 500 lb (227 kg), in which case only one specimen shall be taken.

9.2 *Test Material Selection:*

9.2.1 *Chemical Analysis*— Representative samples from each lot shall be taken during pouring or subsequent processing.

9.2.1.1 Product (check) analysis shall be wholly the responsibility of the purchaser.

9.2.2 *Mechanical Properties* — Samples of the material to provide test specimens for mechanical properties shall be taken from such locations in each lot as to be representative of that lot.

10. Number of Tests

10.1 *Chemical Analysis* — One test per lot.

10.2 *Mechanical Properties* — One test per lot.

TABLE 7
PERMISSIBLE VARIATIONS IN WIDTH[A] OF SHEARED, PLASMA TORCH-CUT, AND ABRASIVE-CUT RECTANGULAR PLATE[B,C]

	Permissible Variations in Widths for Widths Given, in. (mm)									
	Up to 30 (760), incl		Over 30 to 72 (760 to 1830), incl		Over 72 to 108 (1830 to 2740), incl		Over 108 to 144 (2740 to 3660), incl		Over 144 to 160 (3660 to 4070), incl	
Specified Thickness	Plus	Minus	Plus	Minus	Plus	Minus	Plus	Minus	Plus	Minus
Inches										
Sheared:[D]										
3/16 to 5/16, excl	3/16	1/8	1/4	1/8	3/8	1/8	1/2	1/8	...	...
5/16 to 1/2, excl	1/4	1/8	3/8	1/8	3/8	1/8	1/2	1/8	5/8	1/8
1/2 to 3/4, incl	3/8	1/8	3/8	1/8	1/2	1/8	5/8	1/8	3/4	1/8
3/4 to 1, incl	1/2	1/8	1/2	1/8	5/8	1/8	3/4	1/8	7/8	1/8
1 to 1 1/4, incl	5/8	1/8	5/8	1/8	3/4	1/8	7/8	1/8	1	1/8
Abrasive-cut:[E,F]										
3/16 to 1 1/4, incl	1/8	1/8	1/8	1/8	1/8	1/8	1/8	1/8	1/8	1/8
Over 1 1/4 to 2 3/4, incl	3/16	1/8	3/16	1/8	3/16	1/8	3/16	1/8	3/16	1/8
Plasma torch-cut:[G]										
3/16 to 2, excl	1/2	0	1/2	0	1/2	0	1/2	0	1/2	0
2 to 2 3/4, incl	5/8	0	5/8	0	5/8	0	5/8	0	5/8	0
Millimeters										
Sheared:[D]										
4.8 to 7.9, excl	4.8	3.2	6.4	3.2	9.5	3.2	12.7	3.2	...	...
7.9 to 12.7, excl	6.4	3.2	9.5	3.2	9.5	3.2	12.7	3.2	15.9	3.2
12.7 to 19.1, excl	9.5	3.2	9.5	3.2	12.7	3.2	15.9	3.2	19.1	3.2
19.1 to 25.4, excl	12.7	3.2	12.7	3.2	15.8	3.2	19.1	3.2	22.2	3.2
25.4 to 31.8, incl	15.9	3.2	15.9	3.2	19.1	3.2	22.2	3.2	25.4	3.2
Abrasive-cut:[E,F]										
4.8 to 31.8, incl	3.2	3.2	3.2	3.2	3.2	3.2	3.2	3.2	3.2	3.2
Over 31.8 to 69.8, incl	4.8	3.2	4.8	3.2	4.8	3.2	4.8	3.2	4.8	3.2
Plasma torch-cut:[G]										
4.8 to 50.8, excl	12.7	0	12.7	0	12.7	0	12.7	0	12.7	0
50.8 to 69.8, incl	15.9	0	15.9	0	15.9	0	15.9	0	15.9	0

[A] Permissible variations in width for powder- or inert arc-cut plate shall be as agreed upon between the manufacturer and the purchaser.
[B] Permissible variations in machined, powder-, or inert arc-cut circular plate shall be as agreed upon between the manufacturer and the purchaser.
[C] Permissible variations in plasma torch-cut sketch plates shall be as agreed upon between the manufacturer and the purchaser.
[D] The minimum sheared width is 24 in. (610 mm).
[E] The minimum abrasive-cut width is 2 in. (50.8 mm) and increases to 4 in. (101.6 mm) for thicker plates.
[F] These tolerances are applicable to lengths of 240 in. (6100 mm), max. For lengths over 240 in. an additional 1/16 in. (1.6 mm) is permitted, both plus and minus.
[G] The tolerance spread shown for plasma torch cutting may be obtained all on the minus side, or divided between the plus and minus side if so specified by the purchaser.

11. Specimen Preparation

11.1 Tension test specimens shall be taken from material in the final condition (temper) and tested transverse to the direction of rolling when width will permit.

11.2 Tension test specimens shall be any of the standard or subsize specimens shown in Test Methods E 8.

11.3 In the event of disagreement, referee specimens shall be as follows:

11.3.1 Full thickness of the material, machined to the form and dimensions shown for the sheet-type specimen in Test Methods E 8 for material under ½ in. (12.7 mm) in thickness.

TABLE 8
PERMISSIBLE VARIATIONS IN DIAMETER FOR CIRCULAR PLATES

Specified Diameter, in. (mm)	Permissible Variations Over Specified Diameter for Thickness Given, in. (mm)[A]
	Sheared Plate
	To 3/8 (9.5), incl
20 to 32 (508 to 813), excl	1/4 (6.4)
32 to 84 (813 to 2130), excl	5/16 (7.9)
84 to 108 (2130 to 2740), excl	3/8 (9.5)
108 to 140 (2740 to 3580), incl	7/16 (11.1)

		Plasma Torch-Cut Plate[B]			
		Permissible Variations in Specified Diameter for Thickness Given, in. (mm)[C]			
	Thickness, max,	3/16 to 2 (4.8 to 50.8), excl		2 to 2 3/4 (50.8 to 69.8), incl	
Specified Diameter, in. (mm)	in. (mm)	Plus	Minus	Plus	Minus
19 to 20 (483 to 508), excl	2 3/4 (69.8)	1/2 (12.7)	0	5/8 (15.9)	0
20 to 22 (508 to 559), excl	2 3/4 (69.8)	1/2 (12.7)	0	5/8 (15.9)	0
22 to 24 (559 to 610), excl	2 1/2 (63.5)	1/2 (12.7)	0	5/8 (15.9)	0
24 to 28 (610 to 711), excl	2 1/4 (57.3)	1/2 (12.7)	0	5/8 (15.9)	0
28 to 32 (711 to 812), excl	2 (50.8)	1/2 (12.7)	0	5/8 (15.9)	0
32 to 34 (812 to 864), excl	1 3/4 (44.5)	1/2 (12.7)	0	...	...
34 to 38 (864 to 965), excl	1 1/2 (38.1)	1/2 (12.7)	0	...	...
38 to 40 (965 to 1020), excl	1 1/4 (31.8)	1/2 (12.7)	0	...	...
40 to 140 (1020 to 3560), incl	2 3/4 (69.8)	1/2 (12.7)	0	5/8 (15.9)	0

[A] No permissible variations under.
[B] Permissible variations in plasma torch-cut sketch plates shall be as agreed upon between the manufacturer and the purchaser.
[C] The tolerance spread shown may also be obtained all on the minus side or divided between the plus and minus sides if so specified by the purchaser.

TABLE 9
PERMISSIBLE VARIATIONS IN WIDTH OF SHEET AND STRIP

Specified Thickness, in. (mm)	Specified Width, in. (mm)	Permissible Variations in Specified Width, in. (mm) Plus	Minus
	Sheet		
Up to 0.250 (6.35)	All	0.125 (3.18)	0
	Strip		
Under 0.075 (1.9)	Up to 12 (305), incl	0.007 (0.18)	0.007 (0.18)
	Over 12 to 48 (305 to 1219), incl	0.062 (1.6)	0
0.075 to 0.100 (1.9 to 2.5), incl	Up to 12 (305), incl	0.009 (0.23)	0.009 (0.23)
	Over 12 to 48 (305 to 1219), incl	0.062 (1.6)	0
Over 0.100 to 0.125 (2.5 to 3.2), incl	Up to 12 (305), incl	0.012 (0.30)	0.012 (0.30)
	Over 12 to 48 (305 to 1219), incl	0.062 (1.6)	0
Over 0.125 to 0.160 (3.2 to 4.1), incl	Up to 12 (305), incl	0.016 (0.41)	0.016 (0.41)
	Over 12 to 48 (305 to 1219), incl	0.062 (1.6)	0
Over 0.160 to 0.187 (4.1 to 4.7), incl	Up to 12 (305), incl	0.020 (0.51)	0.020 (0.51)
	Over 12 to 48 (305 to 1219), incl	0.062 (1.6)	0
Over 0.187 to 0.250 (4.7 to 6.4), incl	Up to 12 (305), incl	0.062 (1.6)	0.062 (1.6)
	Over 12 to 48 (305 to 1219), incl	0.062 (1.6)	0.062 (1.6)

TABLE 10
PERMISSIBLE VARIATIONS IN LENGTH[A] OF SHEARED, PLASMA TORCH-CUT,[B] AND ABRASIVE-CUT RECTANGULAR PLATE[C]

	Permissible Variation in Length for Lengths Given, in. (mm)															
	Up to 60 (1520), incl		Over 60 to 96 (1520 to 2440), incl		Over 96 to 120 (2440 to 3050), incl		Over 120 to 240 (3050 to 6096), incl		Over 240 to 360 (6096 to 9144), incl		Over 360 to 450 (9144 to 11 430), incl		Over 450 to 540 (11 430 to 13 716), incl		Over 540 (13 716)	
Specified Thickness	Plus	Minus	Plus	Minus	Plus	Minus	Plus	Minus	Plus	Minus	Plus	Minus	Plus	Minus	Plus	Minus
Inches																
Sheared:[D]																
3/16 to 5/16, excl	3/16	1/8	1/4	1/8	3/8	1/8	1/2	1/8	5/8	1/8	3/4	1/8	7/8	1/8	...	...
5/16 to 1/2, excl	3/8	1/8	1/2	1/8	1/2	1/8	1/2	1/8	5/8	1/8	3/4	1/8	7/8	1/8	1	1/8
1/2 to 3/4, excl	1/2	1/8	1/2	1/8	5/8	1/8	5/8	1/8	1/8	1/8	7/8	1/8	1 1/8	1/8	1 3/8	1/8
3/4 to 1, excl	5/8	1/8	5/8	1/8	5/8	1/8	3/4	1/8	7/8	1/8	1 1/8	1/8	1 3/8	1/8	1 5/8	1/8
1 to 1 1/4, incl	3/4	1/8	3/4	1/8	3/4	1/8	7/8	1/8	1 1/8	1/8	1 3/8	1/8	1 5/8	1/8	...	...
Abrasive-cut:[E]																
3/16 to 1 1/4, incl	1/8	1/8	1/8	1/8	1/8	1/8	1/8	1/8	1/8	1/8	1/8	1/8	...	...	...	...
Over 1 1/4 to 2 3/4, incl	3/16	1/8	3/16	1/8	3/16	1/8	3/16	1/8	3/16	1/8	3/16	1/8	...	...	...	...
Plasma torch-cut:[F]																
3/16 to 2, excl	1/2	0	1/2	0	1/2	0	1/2	0	1/2	0	1/2	0	1/2	0	1/2	0
2 to 2 3/4	5/8	0	5/8	0	5/8	0	5/8	0	5/8	0	5/8	0	5/8	0	5/8	0
Millimeters																
Sheared:[D]																
4.8 to 7.94, excl	4.8	3.2	6.4	3.2	9.5	3.2	12.7	3.2	15.9	3.2	19.0	3.2	22.2	3.2	...	...
7.94 to 12.7, excl	9.5	3.2	12.7	3.2	12.7	3.2	12.7	3.2	15.9	3.2	19.0	3.2	22.2	3.2	25.4	3.2
12.7 to 19.0, excl	12.7	3.2	12.7	3.2	15.9	3.2	15.9	3.2	19.0	3.2	22.2	3.2	28.6	3.2	34.9	3.2
19.0 to 25.4, excl	15.9	3.2	15.9	3.2	15.9	3.2	19.0	3.2	22.2	3.2	28.6	3.2	34.9	3.2	41.2	3.2
25.4 to 31.8, incl	19.0	3.2	19.0	3.2	19.0	3.2	22.2	3.2	28.6	3.2	34.9	3.2	41.2	3.2		...
Abrasive-cut:[E]																
4.8 to 31.8, incl	3.2	3.2	3.2	3.2	3.2	3.2	3.2	3.2	3.2	3.2	3.2	3.2	...	...	...	...
Over 31.8 to 69.9, incl	4.8	3.2	4.8	3.2	4.8	3.2	4.8	3.2	4.8	3.2	4.8	3.2	...	...	...	...
Plasma torch-cut:[F]																
4.8 to 50.8, excl	12.7	0	12.7	0	12.7	0	12.7	0	12.7	0	12.7	0	12.7	0	12.7	0
50.8 to 69.8, incl	15.9	0	15.9	0	15.9	0	15.9	0	15.9	0	15.9	0	15.9	0	15.9	0

[A] Permissible variations in length for powder- or inert arc-cut plate shall be as agreed upon between the manufacturer and the purchaser.
[B] The tolerance spread shown for plasma torch cutting may be obtained all on the minus side, or divided between the plus and minus sides if so specified by the purchaser.
[C] Permissible variations in machined, powder-, or inert arc-cut circular plate shall be as agreed upon between the manufacturer and the purchaser.
[D] The minimum sheared length is 24 in. (610 mm).
[E] Abrasive cut applicable to a maximum length of 144 to 400 in. (3658 to 10 160 mm), depending on the thickness and width ordered.
[F] The tolerance spread shown for plasma torch-cut sketch plates shall be as agreed upon between the manufacturer and the purchaser.

11.3.2 The largest possible round specimen shown in Test Methods E 8 for material ½ in. (12.7 mm) and over.

12. Test Methods

12.1 The chemical composition and mechanical and other properties of the material as enumerated in this specification shall be determined, in case of disagreement, in accordance with the following ASTM standards:

Test	ASTM Designation
Chemical analysis	E 1473
Tension	E 8
Rounding procedure	E 29

12.2 For purposes of determining compliance with the specified limits for requirements of the properties listed in the following table, an observed or calculated

TABLE 11
PERMISSIBLE VARIATIONS FROM FLATNESS OF RECTANGULAR, CIRCULAR, AND SKETCH PLATES

Specified Thickness	Permissible Variations from a Flat Surface for Thickness and Widths Given, in. (mm)								
	To 48 (1220), excl	48 to 60 (1220 to 1520), excl	60 to 72 (1520 to 1830), excl	72 to 84 (1830 to 2130), excl	84 to 96 (2130 to 2400), excl	96 to 108 (2440 to 2740), excl	108 to 120 (2740 to 3050), excl	120 to 144 (3050 to 3660), excl	144 (3660) and over
	Inches								
3/16 to 1/4, excl	1 1/2	2 1/8	2 1/2	2 3/4	3 1/4	3 1/4	...	...	...
1/4 to 3/8, excl	1 3/8	1 1/2	1 7/8	2 1/4	2 3/4	2 7/8	3 1/8	3 3/4	...
3/8 to 1/2, excl	1	1 1/8	1 3/8	1 1/2	1 7/8	2 1/4	2 1/2	2 7/8	3 1/2
1/2 to 3/4, excl	1	1 1/8	1 1/4	1 1/4	1 5/8	2 1/4	2 1/4	2 1/4	2 3/4
3/4 to 1, excl	1	1 1/8	1 1/4	1 1/4	1 1/2	1 5/8	1 7/8	2	2 1/4
1 to 2, excl	1	1 1/8	1 1/8	1 1/8	1 3/8	1 3/8	1 3/8	1 1/2	2
2 to 2 3/4, incl	1/2	5/8	3/4	7/8	1	1 1/8	1 1/4	1 1/2	1 3/4
	Millimeters								
4.8 to 6.4, excl	38.1	54.0	63.5	69.8	82.6	82.6	...	...	...
6.4 to 9.5, excl	34.9	38.1	47.6	57.2	69.8	73.0	79.4	95.2	...
9.5 to 12.7, excl	25.4	28.6	34.9	38.1	47.6	57.2	63.5	73.0	88.9
12.7 to 19.0, excl	25.4	28.6	31.8	31.8	41.3	57.2	57.2	57.2	69.8
19.0 to 25.4, excl	25.4	28.6	31.8	31.8	38.1	41.3	47.6	50.8	57.2
25.4 to 50.8, excl	25.4	28.6	28.6	28.6	34.9	34.9	34.9	38.1	50.8
50.8 to 70.0, incl	12.7	15.9	19.0	22.2	25.4	28.6	31.8	38.1	44.4

NOTE 1 — Permissible variations apply toplates up to 12 ft (3.66 m) in length, or to any 12 ft (3.66 m) of longer plates.
NOTE 2 — If the longer dimension is under 36 in. (914 mm), the permissible variation is notgreater than 1/2 in. (12.7) mm.
NOTE 3 — The shorter dimension specified is considered with width, and the permissible variation in flatness across the width does not exceed the tabular amount of that dimension.
NOTE 4 — The maximum deviation from a flat surface does not customarily exceed the tabular tolerance for the longer dimension specified.

value shall be rounded in accordance with the rounding method of Practice E 29.

Test	Rounded Unit for Observed or Calculated Value
Chemical composition and tolerances (when expressed in decimals)	Nearest unit in the last right-hand-place of figures of the specified limit. If two choices are possible, as when the digits dropped are exactly a 5, or a 5 followed only by zeros, choose the one ending in an even digit, with zero defined as an even digit.
Tensile strength and yield strength	Nearest 1000 psi (6.9 MPa)
Elongation	Nearest 1%

13. Inspection

13.1 Inspection of the material shall be made as agreed upon between the manufacturer and the purchaser as part of the purchase contract.

14. Rejection and Rehearing

14.1 Material tested by the purchaser that fails to conform to the requirements of this specification may be rejected. Rejection should be reported to the producer or supplier promptly and in writing. In case of dissatisfaction with the results of the test, the producer or supplier may make claim for a rehearing.

15. Certification

15.1 A manufacturer's certification shall be furnished to the purchaser stating that the material was manufactured, tested, and inspected in accordance with this specification, and that test results on representative samples meet specification requirements. A report of the test results shall be furnished.

16. Product Marking

16.1 Each bundle or shipping container shall be marked with the name of the material or UNS number; condition (temper); this specification number; the size; gross, tare, and net weight; consignor and consignee address; contract or order number; or such other information as may be defined in the contract or order.

17. Keywords

17.1 UNS N06219; UNS N06625; plate; sheet; strip

APPENDIX

(Nonmandatory Information)

X1. CONDITIONS AND FINISHES NORMALLY SUPPLIED

X1.1 Scope

X1.1.1 This appendix lists the conditions and finishes in which plate, sheet, and strip are normally supplied. These are subject to change, and the manufacturer should be consulted for the latest information available.

X1.2 Plate

X1.2.1 Hot-rolled, annealed or solution annealed, and descaled.

X1.2.2 Cold-rolled, annealed or solution annealed, and descaled.

X1.3 Sheet

X1.3.1 Hot-rolled, annealed or solution annealed, and descaled.

X1.3.2 Cold-rolled, annealed or solution annealed, and descaled or bright annealed.

X1.4 Strip

X1.4.1 Cold-rolled, annealed or solution annealed, and descaled or bright annealed.

SPECIFICATION FOR NICKEL-CHROMIUM-MOLYBDENUM-COLUMBIUM ALLOYS (UNS N06625) AND NICKEL-CHROMIUM-MOLYBDENUM-SILICON ALLOY (UNS N06219) PIPE AND TUBE

SB-444

(Identical with ASTM Specification B 444-00$^{\epsilon 1}$ except that certification has been made mandatory.)

1. Scope

1.1 This specification covers nickel-chromium-molybdenum-columbium alloy (UNS N06625) and nickel-chromium-molybdenum-silicon alloy (UNS N06219) in the form of cold-worked seamless pipe and tube. The general requirements for pipe and tube are covered by Specification B 829.

1.1.1 UNS N06625 products are furnished in two grades of different heat-treated conditions:

1.1.1.1 *Grade 1 (annealed)*— Material is normally employed in service temperatures up to 1100°F (593°C).

1.1.1.2 *Grade 2 (solution annealed)*— Material is normally employed in service temperatures above 1100°F (593°C) when resistance to creep and rupture is required.

NOTE 1 — Hot-working or reannealing may change properties significantly, depending on working history and temperatures.

1.1.2 Alloy UNS N06219 is supplied in solution annealed condition only.

1.2 The following precautionary caveat pertains only to the test methods portion, Section 9, of this specification: *This standard does not purport to address all of the safety concerns, if any, associated with its use. It is the responsibility of the user of this standard to establish appropriate safety and health practices and determine the applicability of regulatory limitations prior to use.*

2. Referenced Documents

2.1 *ASTM Standards:*

B 829 Specification for General Requirements for Nickel and Nickel Alloy Seamless Pipe and Tube

3. General Requirement

3.1 Material furnished under this specification shall conform to the applicable requirements of Specification B 829 unless otherwise provided herein.

4. Ordering Information

4.1 Orders for material to this specification shall include information with respect to the following:

4.1.1 Alloy name or UNS number,

4.1.2 ASTM designation,

4.1.3 Condition (temper) (see 1.1.1, 1.1.2, Section 6, and Appendix X1 and Appendix X2),

4.1.3.1 If neither grade of N06625 is specified, Grade 1 will be supplied.

4.1.4 Finish (See Appendix X2),

4.1.5 *Dimensions:*

4.1.5.1 *Tube* — Specify outside diameter and nominal or minimum wall,

4.1.5.2 *Pipe* — Specify standard pipe size and schedule,

4.1.5.3 *Length* — Cut to length or random,

4.1.6 *Quantity* — Feet (or meters) or number of pieces,

4.1.7 *Hydrostatic Pressure Requirements* — Specify test pressure if other than required by 9.1.1,

TABLE 1
ROOM TEMPERATURE TENSILE PROPERTIES AND HEAT TREATMENT INCLUDING SMALL DIAMETER AND LIGHT-WALL TUBING (CONVERTER SIZES)[A,B]

Condition	Tensile Strength, min, ksi (MPa)[C]	Yield Strength (0.2% offset), min, ksi (MPa)[C]	Elongation in 2 in. or 50.8 mm (or 4D), min, %
Alloy N06625			
Grade 1 (annealed)[D]	120 (827)	60 (414)	30
Grade 2 (solution annealed)[E]	100 (690)	40 (276)	30
Alloy N06219			
All (solution annealed)	96 (660)	39 (270)	30

[A] Not applicable to outside diameters under 1/8 in. (3.2 mm) and to wall thicknesses under 0.015 in. (0.38 mm).
[B] Hot forming quality pipe and tubing is furnished to chemical requirements and surface inspection only. No tensile properties are required.
[C] The minimum strength values apply only to tubing in straight lengths.
[D] Annealed at 1600°F (871°C) minimum.
[E] Solution annealed at 2000°F (1093°C) minimum, with or without subsequent stabilization anneal at 1800°F (982°C) minimum to increase resistance to sensitization.

TABLE 2
CHEMICAL REQUIREMENTS

Element	Composition Limits, % N06625	Composition Limits, % N06219
Carbon	0.10 max	0.05 max
Manganese	0.50 max	0.50 max
Silicon	0.50 max	0.70–1.10
Phosphorus	0.015 max	0.020 max
Sulfur	0.015 max	0.010 max
Chromium	20.0 min	18.0–22.0
	23.0 max	...
Columbium + Tantalum	3.15 min	...
	4.15 max	...
Cobalt (if determined)	1.0 max	1.0 max
Molybdenum	8.0 min	7.0–9.0
	10.0 max	...
Iron	5.0 max	2.0–4.0
Aluminum	0.40 max	0.50 max
Titanium	0.40 max	0.50 max
Copper	...	0.50 max
Nickel[A]	58.0 min	Bal.

[A] Element shall be determined arithmetically by difference.

4.1.8 *Certification* — Certification is required,

4.1.9 *Samples for Product (Check) Analysis* — State whether samples for product (check) analysis should be furnished (see 5.2),

4.1.10 *Purchaser Inspection* — If purchaser wishes to witness tests or inspection of material at place of manufacture, the purchase order must so state indicating which tests or inspections are to be witnessed, and

4.1.11 *Small-Diameter and Light-Wall Tube (Converter Sizes)* — See Appendix X1 and Table 1.

5. Chemical Composition

5.1 The material shall conform to the composition limits specified in Table 2. One test is required for each lot as defined in Specification B 829.

5.2 If a product (check) analysis is performed by the purchaser, the material shall conform to the product (check) analysis variations in Table 2 of Specification B 829.

6. Mechanical Properties and Other Requirements

6.1 *Tension Test* — The material shall conform to the tensile properties specified in Table 1. The sampling and specimen preparation are as covered in Specification B 829.

6.2 *Hydrostatic Test* — If any pipe or tube shows leaks during hydrostatic testing, it shall be rejected.

7. Dimensions and Permissible Variations

7.1 Permissible variations for material specified as small-diameter and light-wall tube (converter size) shall conform to the permissible variations prescribed in Table X1.1 and Table X1.2.

8. Number of Tests

8.1 *Chemical Analysis* — One test per lot.

8.2 *Tension* — One test per lot.

8.3 *Hydrostatic* — Each piece in each lot.

9. Test Methods

9.1 *Hydrostatic Test* — Each pipe or tube with an outside diameter 1/8 in. (3 mm) and larger and with wall thickness of 0.015 in. (0.38 mm) and over shall be tested

based on allowable fiber stress for material in the condition furnished, as follows:

N06625:

Grade 1 — 30 000 psi (207 MPa)

Grade 2 — 25 000 psi (172 MPa)

N06219:

All — 24 000 psi (165 MPa)

9.1.1 When so agreed upon by the manufacturer and purchaser, pipe or tube may be tested to $1\frac{1}{2}$ times the allowable fiber stress given above.

APPENDIXES

(Nonmandatory Information)

X1. CONVERTER SIZES

X1.1 Small-diameter and light-wall tube in outside diameters 1¼ in. (31.8 mm) and under may be furnished in a limited range of sizes and the manufacturer should be consulted as to the various outside diameters and wall thicknesses that may be furnished. Material will have a bright finish. Such material shall conform to the requirements in Tables X1.1 and X1.2.

X2. CONDITIONS AND FINISHES NORMALLY SUPPLIED

X2.1 Scope

X2.1.1 This appendix lists the conditions and finishes in which pipe and tube (other than converter sizes) are normally supplied. These are subject to change, and the manufacturer should be consulted for the latest information available.

X2.2 Cold-Worked Tube and Pipe

X2.2.1 *Cold-Drawn, Annealed or Solution Annealed with Ground Outside Diameter* — The inside diameter may have a bright finish when material is annealed or solution annealed in a protective atmosphere; otherwise, the inside diameter is supplied descaled as necessary. It is available in sizes ½ to 4 in. (12.7 to 102 mm), incl, in outside diameter in both normal and heavy-wall tube, and pipe sizes, all schedules, of corresponding outside-diameter dimensions.

X2.2.2 *Cold-Drawn, Annealed or Solution Annealed and Pickled (Not Ground)* — Outside and inside diameter will have dull, matte (pickled) surfaces. Available in sizes ½ to 6⅝ in. (12.7 to 168 mm), incl, in outside diameter in both normal and heavy-wall tube, and pipe sizes, all schedules, of corresponding outside-diameter dimensions.

TABLE X1.1
PERMISSIBLE VARIATIONS FOR SMALL-DIAMETER AND LIGHT-WALL TUBE (CONVERTER SIZES)[A,B,C,D,E,F,G]

	Outside Diameter		Inside Diameter		Wall Thickness, %	
Specified Outside Diameter, in. (mm)	Plus	Minus, in. (mm)	Plus	Minus	Plus	Minus
Under 3/32 (2.4)	0.002 (0.05)	0	0	0.002 (0.05)	10	10
3/32 to 3/16 (2.4 to 4.8), excl	0.003 (0.08)	0	0	0.003 (0.08)	10	10
3/16 to 1/2 (4.8 to 12.7), excl	0.004 (0.10)	0	0	0.004 (0.10)	10	10
1/2 to 1 1/4 (12.7 to 31.8), incl	0.005 (0.13)	0	0	0.005 (0.13)	10	10

[A] *Ovality, Normal-Wall Tube* — Ovality will be held within 2% of the theoretical average outside diameter.

[B] *Ovality, Light-Wall Tube* — Ovality will be held within 3% of the theoretical average outside diameter.

[C] *Wall Tolerances, Light-Wall Tube* — The plus and minus wall tolerance shown in the table shall apply down to and including 0.005 in. (0.13 mm) in wall thickness. For wall thicknesses less than 0.005 in. (0.13 mm), the tolerance shall be ±0.0005 in. (0.013 mm).

[D] *Random Lengths:*

Where nominal random lengths on tubing 1/8 in. (3.2 mm) and larger in outside diameter are specified, a length tolerance of ±3 1/2 ft (1.07 m) applies to the nominal length. This is a total spread of 7 ft (2.13 m).

Random lengths in sizes 1/8 in. (3.2 mm) and larger in outside diameter shall be subject to a length range of 5 to 24 ft (1.52 to 7.32 m). Long random lengths are subject to a range from 15 to 22 ft (4.57 to 6.71 m).

Random lengths in sizes up to, but not including 1/8 in. (3.2 mm) in outside diameter, and fragile light-wall tubes over this outside diameter are subject to the length range from 1 to 15 ft (0.30 to 4.57 m).

[E] *Cut Lengths* — Tolerances on cut lengths shall be in accordance with Table X1.2.

[F] *Straightness* — Round tubing is subject to a straightness tolerance of 1 part in 600 [equivalent to a depth of arc of 0.030 in. (0.76 mm) in any 3 ft (0.91 m) of length].

[G] When specified, the tolerance spreads of this table may be applied as desired. However, when not specified, the tolerances in this table will apply. It should be noted that inside diameter tolerances are based upon the outside diameter range.

TABLE X1.2
TOLERANCES ON CUT LENGTHS OF LIGHT-WALL TUBE

Length, ft (m)	Tube Size, in. (mm)	Permissible Variations, in. (mm)	
		Over	Under
Under 1 (0.30)	up to 1.250 (31.8), incl	1/32 (0.8)	0 (0)
1 to 4 (0.30 to 1.22), incl	up to 1.250 (31.8), incl	1/16 (1.6)	0 (0)
Over 4 to 10 (1.22 to 3.0), incl	up to 1.250 (31.8), incl	3/32 (2.4)	0 (0)
Over 10 (3.0)	up to 1.250 (31.8), incl	3/16 (4.8)	0 (0)

SPECIFICATION FOR NICKEL-CHROMIUM-MOLYBDENUM-COLUMBIUM ALLOY (UNS N06625) ROD AND BAR

SB-446

(Identical with ASTM Specification B 446-93 except that certification has been made mandatory.)

1. Scope

1.1 This specification covers nickel-chromium-molybdenum-columbium (UNS N06625) in the form of hot-worked rod and bar and cold-worked rod in the conditions shown in Table 1.

1.1.1 These products are furnished in two grades of different heat-treated conditions:

1.1.1.1 *Grade 1* (annealed) — Material is normally employed in service temperatures up to 1100°F (593°C).

1.1.1.2 *Grade 2* (solution annealed) — Material is normally employed in service temperatures above 1100°F (593°C) when resistance to creep and rupture is required.

NOTE — Hot-working or reannealing may change properties significantly, depending on working history and temperatures.

1.2 The values stated in inch-pound units are to be regarded as the standard. The values given in parentheses are for information only.

1.3 The following precautionary caveat pertains only to the test methods portion, Section 12, of this specification: *This standard does not purport to address all of the safety problems, if any, associated with its use. It is the responsibility of the user of this standard to establish appropriate safety and health practices and determine the applicability of regulatory limitations prior to use.*

2. Referenced Documents

2.1 *ASTM Standards:*

B 443 Specification for Nickel-Chromium-Molybdenum-Columbium Alloy (UNS N06625) Plate, Sheet, and Strip

TABLE 1
ROOM TEMPERATURE TENSILE PROPERTIES AND HEAT TREATMENT

Diameter or Distance Between Parallel Surfaces, in. (mm)	Tensile Strength min, ksi (MPa)	Yield Strength (0.2 % offset), min, ksi (MPa)	Elongation in 2 in. or 50 mm or 4*D*, min, %
		Grade 1 (Annealed)[A]	
Up to 4 (102), incl	120	60	30
Over 4 (102) to 10 (254), incl	110	50	25
		Grade 2 (Solution Annealed)[B]	
All sizes	100	40	30

[A] Annealed at 1600°F (871°C) minimum.

[B] Solution annealed at 2000°F (1093°C) minimum, with or without subsequent stabilization anneal at 1800°F (982°C) minimum to increase resistance to sensitization.

[C] Forging quality is furnished to chemical requirements and surface inspection only. No tensile properties are required.

E 8 Test Methods of Tension Testing of Metallic Materials
E 29 Practice for Using Significant Digits in Test Data to Determine Conformance with Specifications
E 38 Methods for Chemical Analysis of Nickel-Chromium and Nickel-Chromium-Iron Alloys
E 354 Test Methods for Chemical Analysis of High-Temperature, Electrical, Magnetic, and Other Similar Iron, Nickel and Cobalt Alloys

3. Terminology

3.1 *Descriptions of Terms Specific to This Standard:*

3.1.1 *bar* — material of rectangular (flats) or square solid section up to and including 10 in. (254 mm) in width and $\frac{1}{8}$ in. (3.2 mm) and over in thickness in straight lengths.

3.1.1.1 *Discussion* — Hot-worked rectangular bar in widths 10 in. (254 mm) and under may be furnished as hot-rolled plate with sheared or cut edges in accordance with Specification B 443, provided the mechanical property requirements of this specification are met.

3.1.2 *rod* — material of round solid section furnished in straight lengths.

4. Ordering Information

4.1 Orders for material to this specification shall include information with respect to the following:

4.1.1 ASTM designation,

4.1.2 UNS number,

4.1.3 *Section* — Rod (round) or bar (square or rectangular),

4.1.4 *Dimensions,* including length,

4.1.5 Condition (see 1.1.1 and Appendix),

4.1.5.1 If neither grade is specified, Grade 1 will be supplied,

4.1.6 Finish (Section 8),

4.1.7 *Quantity* — Feet (or metres) or number of pieces,

4.1.8 *Certification* — State if certification is required (Section 15),

4.1.9 *Samples for Product (Check) Analysis* — State whether samples for product (check) analysis should be furnished (see 5.2), and

4.1.10 *Purchaser Inspection* (Section 13) — If purchaser wishes to witness tests or inspection of material at place of manufacture, the purchase order must so state, indicating which test or inspections are to be witnessed.

TABLE 2
CHEMICAL REQUIREMENTS

Element	Composition Limits, %	Product (Check) Analysis Variations under min or over max of the Specified Limit of Element
C	0.10 max	0.01
Mn	0.50 max	0.03
Si	0.50 max	0.03
P	0.015 max	0.005
S	0.015 max	0.003
Cr	20.0 min	0.25
	23.0 max	0.25
Cb + Ta	3.15 min	0.15
	4.15 max	0.15
Co (if determined)	1.0 max	0.03
Mo	8.0 min	0.15
	10.0 max	0.15
Fe	5.0 max	0.07
Al	0.40 max	0.05
Ti	0.40 max	0.03
Ni[A]	58.0 min	0.35

[A] Element shall be determined arithmetically by difference.

5. Chemical Composition

5.1 The material shall conform to the composition limits specified in Table 2.

5.2 If a product (check) analysis is performed by the purchaser, the material shall conform to the product (check) analysis variations in Table 2.

6. Mechanical Properties and Other Requirements

6.1 *Mechanical Properties* — The material shall conform to the heat treatment and room temperature tensile properties prescribed in Table 1.

7. Dimensions and Permissible Variations

7.1 *Diameter, Thickness, or Width* — The permissible variations from the specified dimensions of cold-worked rod shall be as prescribed in Table 3, and of hot-worked rod and bar as prescribed in Table 4.

7.2 *Out-of-Round* — Hot-worked rods and cold-worked rods (except "forging quality") all sizes, in straight lengths, shall not be out-of-round by more than one half the total permissible variations in diameter shown in Tables 3 and 4, except for hot-worked rods $\frac{1}{2}$ in. (12.7 mm) in diameter and under, which may be out-of-round by the total permissible variations in diameter shown in Table 4.

TABLE 3
PERMISSIBLE VARIATIONS IN DIAMETER OF COLD-WORKED ROD

Specified Dimension, in. (mm)	Permissible Variations from Specified Dimension, in. (mm)	
	Plus	Minus
1/16 (1.6) to 3/16 (4.8), excl	0	0.002 (0.05)
3/16 (4.8) to 1/2 (12.7), excl	0	0.003 (0.08)
1/2 (12.7) to 15/16 (23.8), incl	0.001 (0.03)	0.002 (0.05)
Over 15/16 (23.8) to 1 15/16 (49.2), incl	0.0015 (0.04)	0.003 (0.08)
Over 1 15/16 (49.2) to 2 1/2 (63.5), incl	0.002 (0.05)	0.004 (0.10)

TABLE 4
PERMISSIBLE VARIATIONS IN DIAMETER OR DISTANCE BETWEEN PARALLEL SURFACES OF HOT-WORKED ROD AND BAR

Specified Dimension, in. (mm)[A]	Permissible Variations from Specified Dimensions, in., (mm)	
	Plus	Minus
Rod and bar, hot-worked:		
1 (25.4) and under	0.016 (0.41)	0.016 (0.41)
Over 1 (25.4) to 2 (50.8), incl	0.031 (0.79)	0.016 (0.41)
Over 2 (50.8) to 4 (101.6), incl	0.047 (1.19)	0.031 (0.79)
Over 4 (101.6)	0.125 (3.18)	0.063 (1.60)
Rod, rough-turned or ground:		
Under 1 (25.4)	0.005 (0.13)	0.005 (0.13)
1 (25.4) and over	0.031 (0.79)	0
Forging quantity rod:[B]		
Under 1 (25.4)	0.005 (0.13)	0.005 (0.13)
1 (25.4) and over	0.031 (0.79)	0

[A] Dimensions apply to diameter of rods, to distance between parallel surfaces of squares, and separately to width and thickness of rectangles.

[B] Spot grinding is permitted to remove minor surface imperfections. The depth of these spot ground areas shall not exceed 3% of the diameter of the rod.

7.3 *Machining Allowances for Hot-Worked Materials* — When the surfaces of hot-worked products are to be machined, the allowances prescribed in Table 5 are recommended for normal machining operations.

7.4 *Length* — The permissible variations in length of cold-worked and hot-worked rod and bar shall be as prescribed in Table 6.

7.4.1 Rods and bars ordered to random or nominal lengths will be furnished with either cropped or saw-cut ends; material ordered to cut lengths will be furnished with square saw-cut or machined ends.

7.5 *Straightness:*

7.5.1 The permissible variations in straightness of cold-worked rod as determined by the departure from straightness shall be as prescribed in Table 7.

7.5.2 The permissible variations in straightness of hot-worked rod and bar as determined by the departure from straightness shall be as specified in Table 8.

8. Workmanship, Finish, and Appearance

8.1 The material shall be uniform in quality and condition, smooth, commercially straight or flat, and free of injurious imperfections.

9. Sampling

9.1 *Lot — Definition:*

9.1.1 A lot for chemical analysis shall consist of one heat.

9.1.2 A lot for mechanical properties testing shall consist of all material from the same heat, nominal diameter or thickness, and condition.

9.1.2.1 Where material cannot be identified by heat, a lot shall consist of not more than 500 lb (227 kg) of material in the same size and condition except that a single piece weighing over 500 lb (227 kg) shall be considered as one lot.

TABLE 5
NORMAL MACHINING ALLOWANCES FOR HOT-WORKED MATERIAL

Finished-Machined Dimensions for Finishes As Indicated below, in. (mm)[A]	Normal Machining Allowance, in. (mm)			
	On Diameter, For Rods	Distance Between Parallel Surfaces of Square Bars	For Rectangular Bar	
			On Thickness	On Width
Hot-worked:[B]				
Up to 7/8 (22.2), incl	1/8 (3.2)	1/8 (3.2)	1/8 (3.2)	3/16 (4.8)
Over 7/8 to 1 7/8 (22.2 to 47.6), incl	1/8 (3.2)	3/16 (4.8)	1/8 (3.2)	3/16 (4.8)
Over 1 7/8 to 2 7/8 (47.6 to 73.0), incl	3/16 (4.8)	1/4 (6.4)	...	3/16 (4.8)
Over 2 7/8 to 3 13/16 (73.0 to 96.8), incl	1/4 (6.4)	...	...	3/16 (4.8)
Over 3 13/16 (96.8)	1/4 (6.4)	...	...	3/8 (9.5)
Hot-worked rods, rough-turned or rough ground:[C]				
15/16 to 4 (23.8 to 101.6), incl in diameter	1/16 (1.6)	...	...	...
Over 4 to 12 (101.6 to 304.8), incl in diameter	1/8 (3.2)	...	...	...

[A] Dimensions apply to diameter of rods, to distance between parallel surfaces of square bar, and separately to width and thickness of rectangular bar.

[B] The allowances for hot-worked material in Table 5 are recommended for rods machined in lengths of 3 ft (0.91 m) or less and for bars machined in lengths of 2 ft (0.61 m) or less. Hot-worked material to be machined in longer lengths should be specified showing the finished cross-sectional dimension and the length in which the material will be machined in order that the manufacturer may supply material with sufficient oversize, including allowance for out-of-straightness.

[C] Applicable to 3 ft (0.91 m) max length.

TABLE 6
PERMISSIBLE VARIATIONS IN LENGTH OF RODS AND BARS

Random mill lengths:

Hot-worked[A]

6 to 24 ft (1.83 to 7.31 m) long with not more than 25 weight % between 6 and 9 ft (1.83 and 2.74 m).[B]

Cold-worked

6 to 20 ft (1.83 to 6.1 m) long with not more than 25 weight % between 6 and 10 ft (1.83 and 3.05 m).

Multiple lengths

Furnished in multiples of a specified unit length, within the length limits indicated above. For each multiple, an allowance of 1/4 in. (6.4 mm) will be made for cutting, unless otherwise specified. At the manufacturer's option, individual specified unit lengths may be furnished.

Nominal lengths

Specified nominal lengths having a range of not less than 2 ft. (610 mm) with no short lengths allowed.[A]

Cut lengths

A specified length to which all rods and bars will be cut with a permissible variation of plus 1/8 in. (3.2 mm), minus 0 for sizes 8 in. (203 mm) and less in diameter or distance between parallel surfaces. For larger sizes, the permissible variation shall be + 1/4 in. (6.4 mm), −0.

[A] For cold-worked rod under 1/2 in. (12.7 mm) in diameter ordered to nominal or stock lengths with a 2-ft (610 mm) range, at least 93% of such material shall be within the range specified; the balance may be in shorter lengths but in no case shall lengths less than 4 ft (1220 mm) be furnished.

[B] For hot-worked sections weighing over 25 lb/ft (37 kg/m) and for smooth forged products, all sections, short lengths down to 2 ft (610 mm) may be furnished.

TABLE 7
PERMISSIBLE VARIATIONS IN STRAIGHTNESS OF COLD-WORKED RODS

Specified Diameter, in. (mm)[A]	Permissible Variations, in. (mm)
	Depth of Chord:
1/2 (12.7) to 2 1/2 (63.5), incl	0.030 (0.76) per ft (305 mm) of length

[A] Material under 1/2 in. (12.7 mm) shall be reasonably straight and free of sharp bends and kinks.

TABLE 8
PERMISSIBLE VARIATIONS IN STRAIGHTNESS OF HOT-WORKED RODS AND BARS[A]

Finish	Permissible Variations, in./ft (mm/m)[B]
Rods and bars, hot-worked	0.050 (4.2)[C]
Rounds—hot-worked, rough ground or rough turned	0.050 (4.2)[C]

[A] Not applicable to forging quality.
[B] Material under ½ in. (12.7 mm) shall be reasonably straight and free of sharp bends and kinks.
[C] The maximum curvature (depth of chord) shall not exceed the values indicated multiplied by the length in feet.

9.2 *Test Material Selection:*

9.2.1 *Chemical Analysis* — Representative samples from each lot shall be taken during pouring or subsequent processing.

9.2.1.1 Product (check) analysis shall be wholly the responsibility of the purchaser.

9.2.2 *Mechanical Properties* — Samples of the material to provide test specimens for mechanical properties shall be taken from such locations in each lot as to be representative of that lot.

10. Number of Tests

10.1 *Chemical Analysis* — One test per lot.

10.2 *Tension* — One test per lot.

11. Specimen Preparation

11.1 Tension test specimens shall be taken from material in the final condition and tested in the direction of fabrication.

11.1.1 All rod and bar shall be tested in full cross section size when possible. When a full cross section size test cannot be performed, the largest possible round specimen shown in Test Methods E 8 shall be used. Longitudinal strip specimens shall be prepared in accordance with Test Methods E 8 for rectangular bar up to ½ in. (12.7 mm), inclusive, in thicknesses that are too wide to be pulled full size.

12. Test Methods

12.1 The chemical composition and mechanical and other properties of the material as enumerated in this specification shall be determined, in case of disagreement, in accordance with the following ASTM standards:

Test	ASTM Designation
Chemical analysis	E 38,[A] E 354
Tension	E 8
Rounding procedure	E 29

[A] Methods E 38 are to be used only for elements not covered by Test Methods E 354.

12.2 For purposes of determining compliance with the specified limits for requirements of the properties listed in the following table, an observed or calculated value shall be rounded as indicated below, in accordance with the rounding method of Practice E 29:

Test	Rounded unit for observed or calculated value
Chemical composition and tolerances (when expressed in decimals)	nearest unit in the last right-hand place of figures of the specified limit. If two choices are possible, as when the digits dropped are exactly a 5, or a 5 followed only by zeros, choose the one ending in an even digit, with zero defined as an even digit.
Tensile strength and yield strength	nearest 1000 psi (6.9 MPa)
Elongation	nearest 1%

13. Inspection

13.1 Inspection of the material shall be made as agreed upon between the manufacturer and the purchaser as part of the purchase contract.

14. Rejection and Rehearing

14.1 Material tested by the purchaser that fails to conform to the requirements of this specification may be rejected. Rejection should be reported to the producer or supplier promptly and in writing. In case of dissatisfaction with the results of the test, the producer or supplier may make claim for a rehearing.

15. Certification

15.1 Certification shall be furnished to the purchaser that the material was manufactured, sampled, tested, and inspected in accordance with this specification and has been found to meet the requirements. When specified in

the purchase order or contract, a report of the test results shall be furnished.

16. Product Marking

16.1 The following information shall be marked on the material or included on the package, or on a label or tag attached thereto: The name of the material or UNS number; heat number; condition (temper); this specification number; the size; gross, tare and net weight; consignor and consignee address; contract or order number; or such other information as may be defined in the contract or order.

APPENDIX

(Nonmandatory Information)

X1. PROCURABLE CONDITIONS AND FINISHES

X1.1 The various conditions and finishes in which rod and bar are procurable are as follows:

X1.1.1 *Hot Finished, Annealed, or Solution-Annealed* — Soft, with a tightly adherent dark oxide.

X1.1.2 *Hot Finished, Annealed or Solution Annealed, and Pickled* — Same as X1.1.1 except descaled for removal of mill oxide. Provides for better surface inspection than does hot-worked, annealed material and often employed where welding is involved where removal of mill oxide is desired.

NOTE X1.1 — Annealing or solution annealing prior to pickling may be required in order to reduce the mill oxide since uniform pickling of an unreduced oxide is difficult.

X1.1.3 *Hot-Worked, Annealed, and Rough Ground* — Similar to X1.1.1 except rough ground.

X1.1.4 *Hot-Worked, Annealed, and Rough-Turned* — Similar to X1.1.1 except rough turned with a broad nosed tool similar to a bar peeling operation and thus may not be straight. Intended generally for machining where an overhauled surface is desired, essentially for machined step down shafts or parts machined in short lengths of 3 ft (0.91 m) or less.

X1.1.5 *Hot-Worked, Forging Quality* — Rough turned and spot ground, as necessary, for sizes 1 in. (25.4 mm) in diameter and over; rough ground and spot ground for sizes under 1 in. in diameter. Material is selected from heats of known, good hot malleability.

NOTE X1.2 — For sizes $2\frac{1}{2}$ in. (63.5 mm) in diameter and less, cold-worked rod may be used also for forging by virtue of the fact such rod have been overhauled for removal of mechanical surface defects prior to cold-working. In such cases, the user should run pilot forging tests to ensure himself that such material has the desired hot malleability range.

X1.1.6 *Cold-Drawn, Annealed, or Solution-Annealed, and Pickled* — Hot finished, overhauled, cold-drawn, annealed or solution-annealed, descaled, and straightened.

SPECIFICATION FOR FORGED OR ROLLED UNS N06030, UNS N06022, UNS N06200, UNS N08020, UNS N08024, UNS N08026, UNS N08367, UNS N10276, UNS N10665, UNS N10675, AND UNS R20033 ALLOY PIPE FLANGES, FORGED FITTINGS, AND VALVES AND PARTS FOR CORROSIVE HIGH-TEMPERATURE SERVICE

04

SB-462

(Identical with ASTM Specification B 462-02, except certification has been made mandatory.)

1. Scope

1.1 This specification covers forged or rolled UNS N06030, UNS N06022, UNS N06200, UNS N08020, UNS N08024, UNS N08026, UNS N08367, UNS N10276, UNS N10665, UNS N10675, and UNS R20033 pipe flanges, forged fittings, and valves and parts intended for corrosive high-temperature service.

1.2 The values stated in inch-pound units are to be regarded as the standard. The values given in parentheses are for information only.

1.3 *This standard does not purport to address all of the safety concerns, if any, associated with its use. It is the responsibility of the user of this standard to become familiar with all hazards including those identified in the appropriate Material Safety Data Sheet for this product/material as provided by the manufacturer, to establish appropriate safety and health practices, and determine the applicability of regulatory limitations prior to use.*

2. Referenced Documents

2.1 *ASTM Standards:*

A 262 Practices for Detecting Susceptibility to Intergranular Attack in Austenitic Stainless Steels

B 472 Specification for UNS N06030, UNS N06022, UNS N06200, UNS N08020, UNS N08026, UNS N08024, UNS N08926, UNS N08367, UNS N10276, UNS N10665, UNS N10675, and UNS R20033 Nickel Alloy Billets and Bars for Reforging

B 880 Specification for General Requirements for Chemical Check Analysis Limits for Nickel, Nickel Alloys and Cobalt Alloys

E 8 Test Methods for Tension Testing of Metallic Materials

E 1473 Test Methods for Chemical Analysis of Nickel, Cobalt, and High-Temperature Alloys

E 1916 Guide for the Identification and/or Segregation of Mixed Lots of Metals

2.2 *ANSI Standard:*

B 16.5 Steel Pipe Flanges and Flanged Fittings (for applicable alloy UNS N08020)

2.3 *Manufacturers' Standardization Society of the Valve and Fittings Industry Standard:*

SP-25 Standard Marking System for Valves, Fittings, Flanges, and Unions

3. Terminology

3.1 *Definitions of Terms Specific to This Standard:*

3.1.1 *forgings* — the term forgings as used in this specification shall be understood to cover one or all of the products mentioned in 1.1, either forged or rolled.

4. Ordering Information

4.1 It is the responsibility of the purchaser to specify all requirements that are necessary for the safe and satisfactory performance of material ordered under this specification. Examples of such requirements inlcude, but are not limited to, the following:

4.1.1 Quantity (weight or number of pieces),

4.1.2 Name of material or UNS number,

4.1.3 Forging sketch when required (5.2.4),

4.1.4 Forging sectioning, if required (5.2.3),

4.1.5 ASTM designation and year of issue,

4.1.6 Inspection (14.1),

4.1.7 Supplementary requirements, if any, and

4.1.8 If possible, the intended end use.

NOTE 1 — A typical ordering description is as follows: 200 forgings, UNS N08020, in accordance with the attached drawing and Specification B 462.

5. Materials and Manufacture

5.1 *Discard* — A sufficient discard shall be made from each ingot to secure freedom from injurious piping and undue segregation. The material shall have a homogenous structure as shown by the macroetch test in 7.3.

5.2 *Manufacturing Practice:*

5.2.1 Material for forgings shall consist of billets or bars in accordance with Specification B 472.

5.2.2 The material shall be forged by hammering, pressing, rolling, extruding, or upsetting; it shall be brought as nearly as practicable to the finished shape and size by hot working; and shall be so processed as to cause metal flow during the hot-working operation in the direction most favorable for resisting the stresses encountered in service.

5.2.3 When specified in the order, a sample forging may be sectioned and etched to show flow lines and the condition as regards internal imperfections. In such cases, the question of acceptable and unacceptable character of metal flow shall be a subject for agreement between the manufacturer and the purchaser.

5.2.4 When specified in the order, the manufacturer shall submit for approval of the purchaser a sketch showing the shape of the rough forging before machining.

5.3 *Heat Treatment:*

5.3.1 The product of UNS N08020 alloy shall be furnished in the stabilized-annealed condition. The product of UNS N08024 shall be furnished in the annealed condition. The product of UNS N06022, UNS N08026, UNS N06030, UNS N06200, UNS N10276, UNS N10665, UNS N10675, and UNS R20033 alloys shall be furnished in the solution annealed condition.

NOTE 2 — The recommended annealing temperatures all followed by water quenching or rapidly cooling by other means are: UNS N06030 — 2125°F–2175°F (1163°C–1191°C), UNS N06022 — 2025°F–2075°F (1107°C–1135°C), UNS N06200 — 2075°F–2125°F (1135°C–1163°C), UNS N08020 — 1700 to 1850°F (927 to 1010°C), UNS N08024 — 1925 to 1975°F (1052 to 1079°C), UNS N08026 — 2050 to 2200°F (1121 to 1204°C), UNS N10276 — 2025 °F–2075°F (1107°C–1135°C), UNS N10665 — 1925°F–2000°F (1052°C–1093°C), UNS N10675 — 1925°F–2000°F (1052°C–1093°C), and UNS R20033 — 2010 to 2150°F (1100–1180°C).

5.3.2 Alloy N08367 shall be furnished in the solution annealed condition.

5.3.2.1 The recommended heat treatment shall consist of heating to a minimum temperature of 2025°F (1105°C) and quenching in water, or rapidly cooling, by other means.

5.3.3 Heat treatment may be performed before machining.

6. Chemical Composition

6.1 The material shall conform to the requirements as to chemical composition prescribed in Table 1.

6.2 If a product (check) analysis is performed by the purchaser, the material shall conform to the requirements specified in Table 1 subject to the permissible tolerances in Specification B 880.

7. Mechanical Properties and Other Requirements

7.1 *Mechanical Properties* — The material shall conform to the requirements as to mechanical properties prescribed in Table 2 at room temperature.

7.2 *Hydrostatic Tests* — After machining, valve bodies, fittings, and other pressure-containing parts shall be tested to the hydrostatic shell-test pressures prescribed in ANSI B16.5 for the applicable alloy steel rating for which the forging is designed and shall show no leaks. Forgings ordered under these specifications for working pressures other than those listed in the American National Standard ratings shall be tested to such pressures as may be agreed upon between the manufacturer and the purchaser.

7.2.1 No hydrostatic test is required for welding neck or other flanges.

7.2.2 The forging manufacturer is not required to perform pressure tests on rough forgings that are to be finally machined by others. The fabricator of finished

TABLE 1
CHEMICAL REQUIREMENTS

Element	Composition, %										
	UNS N06022	UNS N06030	UNS N06200	UNS N08020	UNS N08024	UNS N08026	UNS N08367	UNS N10276	UNS N10665	UNS N10675	UNS R20033
Carbon, max	0.015	0.03	0.010	0.07	0.03	0.03	0.030	0.010	0.02	0.01	0.015
Manganese, max	0.50	1.5	0.50	2.00	1.00	1.00	2.00	1.0	1.0	3.0	2.0
Phosphorous, max	0.02	0.04	0.025	0.045	0.035	0.03	0.040	0.04	0.04	0. 030	0.02
Sulfur, max	0.02	0.02	0.010	0.035	0.035	0.03	0.030	0.03	0.03	0.010	0.01
Silicon, max	0.08	0.8	0.08	1.00	0.50	0.50	1.00	0.08	0.10	0.10	0.50
Nickel	Remainder	Remainder	Remainder	32.00-38.00	35.00-40.00	33.00-37.20	23.50-25.50	Remainder	Remainder	Remainder	30.0-33.0
Chromium	20.0-22.5	28.0-31.5	22.0-24.0	19.00-21.00	22.50-25.00	22.00-26.00	20.00-22.00	14.5-16.5	1.0 max	1.0-3.0	31.0-35.0
Molybdenum	12.5-14.5	4.0-6.0	15.0-17.0	2.00-3.00	3.50-5.00	5.00-6.70	6.00-7.00	15.0-17.0	26.0-30.0	27.0-32.0	0.50-2.0
Copper	...	1.0-2.4	1.3-1.9	3.00-4.00	0.50-1.50	2.00-4.00	0.75 max	...	...	0.20	0.30-1.20
Columbium (Nb) + Tantalum	...	0.30-1.50	...	8×carbon-1.00	0.15-0.35	...	...	...	...	...	...
Nitrogen	...	...	...	...	...	0.10-0.16	0.18-0.25	...	...	...	0.35-0.60
Iron	2.0-6.0	13.0-17.0	3.0 max	Remainder[A]	Remainder[A]	Remainder[A]	Remainder	4.0-7.0	2.0 max	1.0-3.0	Balance
Cobalt, max	2.5	5.0	2.0	...	...	...	...	2.5	1.0	3.0	...
Tungsten	2.5-3.5	1.5-4.0	...	...	...	...	...	3.0-4.5	...	3.0 max	...
Vanadium, max	0.35	...	...	...	...	...	...	0.35	...	0.20	...
Titanium, max	...	...	...	...	...	...	...	...	...	0.2	...
Zirconium, max	...	...	...	...	...	...	...	...	...	0.10	...
Columbium (Nb)	...	...	...	...	...	...	...	...	...	0.20 max	...
Tantalum	...	...	...	...	...	...	...	...	...	0.20 max	...
Nickel + Molybdenum	...	...	...	...	...	...	...	...	...	94.0-98.0	...
Aluminum, max	...	...	0.50	...	...	...	...	...	...	0.50	...

[A] Iron shall be determined arithmetically by difference.

TABLE 2
MECHANICAL PROPERTY REQUIREMENTS

Alloy	Tensile Strength, min		Yield Strength, min		Elongation in 2 in. or 50 mm, min, %	Reduction of Area, min, %
	ksi	MPa	ksi	MPa		
UNS N08020, UNS N08024, and UNS N08026	80	551	35	241	30.0	50.0
UNS N08367	95	655	45	310	30.0	50.0
UNS R20033	109	750	55	380	40.0	...
UNS N06030	85	586	35	241	30	...
UNS N06022	100	690	45	310	45	...
UNS N06200	100	690	41	283	45	...
UNS N10276	100	690	41	283	40	...
UNS N10665	110	760	51	350	40	...
UNS N10675	110	760	51	350	40	...

forged parts is not required to pressure-test forgings that are designed to be pressure containing only after assembly by welding into a larger structure. However, the manufacturer of such forgings is responsible as required in accordance with 15.1 for the satisfactory performance of the forgings under the final test required in 7.2.

7.3 *Macroetch Tests* — Etching of tests shall show sound and reasonably uniform material, free of injurious laminations, cracks, segregations, and similar objectionable defects. If, on successive tests, 10% of any heat fails to pass the requirements of the maccroetch test, all forgings from that heat shall be rejected.

8. Dimensions and Permissible Variations

8.1 The forgings shall conform to the sizes and shapes specified by the purchaser.

9. Workmanship, Finish, and Appearance

9.1 The forgings shall be uniform in quality and condition, and shall be free of injurious defects.

10. Sampling

10.1 *Lot* — Definition:

10.1.1 A lot for chemical analysis shall consist of one heat.

10.1.2 A lot for mechanical properties shall consist of each heat in each heat-treatment charge.

10.2 *Test Material Selection:*

10.2.1 *Chemical Analysis* — Representative samples shall be taken during pouring or subsequent processing.

10.2.1.1 *Check analysis,* shall be wholly the responsibility of the purchaser.

10.2.2 *Mechanical Properties* — Samples of the material to provide test specimens shall be taken from such locations in each lot as to be representative of that lot.

11. Number of Tests

11.1 *Chemical Analysis* — One test per lot.

11.2 *Mechanical Properties* — One test per lot.

12. Specimen Preparation

12.1 The tension test specimens taken from the forgings, billets, or bars shall be machined to the form and dimensions of the standard 2-in. (50.8-mm) gage length tension test specimen shown in Fig. 8 of Test Methods E 8, except as specified in 12.2.

12.2 In the case of small sections that will not permit taking the standard test specimen specified in 12.1, the tension test specimen shall be as large as feasible and its dimensions shall be proportional to those shown in Fig. 8 of Test Methods E 8. The gage length for measuring elongation shall be four times the diameter of the specimen.

12.3 For the purpose of tests, the necessary extra forgings or test bars shall be provided. The test specimen, if cut from a flange, shall be cut tangentially from the flange portion approximately midway between the inner and outer surfaces and approximately midway between the front and back faces. When it is impractical to provide forgings for test purposes, test bars may be made from the billet or bar, provided they are given approximately the same reduction and heat treatment as the forgings.

13. Test Methods

13.1 The chemical composition and mechanical properties of the material as enumerated in this specification shall, in case of disagreement, be determined in accordance with the following methods:

Test	ASTM Designation
Chemical analysis	E 1473[A]
Tension	E 8

[A] Iron shall be determined arithmetically by difference.

14. Inspection

14.1 If specified, source inspection of the material by the purchaser at the manufacturer's plant shall be made as agreed upon between the manufacturer and the purchaser as part of the purchase contract.

15. Rejection and Rehearing

15.1 Material that fails to conform to the requirements of this specification may be rejected. Rejection should be reported to the producer or supplier promptly and in writing. In case of dissatisfaction with the results of the test, the producer or supplier may make claim for a rehearing.

16. Certification

16.1 The manufacturer's certification shall be furnished to the purchaser that the material was manufactured, sampled, tested, and inspected in accordance with

this specification and has been found to meet the requirements. A report of the test results shall be furnished.

17. Product Marking

17.1 Identification marks consisting of the manufacturer's symbol or name, designation of service rating, the specification, the grade of material, and the size shall be stamped legibly on each forging in accordance with MSS SP-25 and in such position as not to injure the usefulness of the forging.

18. Keywords

18.1 forgings, UNS N06030, UNS N06022, UNS N06200, UNS N08020, UNS N08024, UNS N08026, UNS N08367, UNS N10276, UNS N10665, UNS N10675, UNS R20033

SUPPLEMENTARY REQUIREMENTS

The following supplementary requirements shall be applied only when specified by the purchaser in the inquiry, contract, or order.

S1. Corrosion Tests for UNS N08020

S1.1 One intergranular corrosion test per heat shall be performed by the manufacturer on a sensitized specimen and tested in accordance with Practices A 262. When this supplementary requirement is specified, the specific practice (Practice B or Practice E) shall also be specified. If Practice B is specified, the specimen must pass with a rate of less than 0.002 inches per month (ipm).

S1.1.1 In addition to the stabilize anneal, the specimen shall be sensitized for 1 h at 1250°F (677°C) before being subjected to corrosion testing.

S2. Positive Material Identification Examination

S2.1 Product shall receive Positive Material Identification to ensure that the purchaser is receiving product of the correct material grade prior to shipment of the product. This examination is a method to assure that no material grade mix-up has happened during manufacturing and marking of the product.

S2.2 Product shall receive a Positive Material Identification examination by Guide E 1916.

S2.3 The quantity examined shall be 100% of the product.

S2.4 All product that is not of the correct material grade shall be rejected.

S2.5 The method of product marking after examination shall be agreed upon between the manufacturer and purchaser.

SPECIFICATION FOR UNS N08020, UNS N08026, AND UNS N08024 ALLOY PLATE, SHEET, AND STRIP

SB-463

(Identical with ASTM Specification B 463-93 except that certification has been made mandatory.)

1. Scope

1.1 This specification covers UNS N08020, UNS N08026, and UNS N08024 alloy plate, sheet, and strip.

1.2 The values stated in inch-pound units are to be regarded as the standard. The values given in parentheses are for information only.

2. Referenced Documents

2.1 *ASTM Standards:*

A 262 Practices for Detecting Susceptibility to Intergranular Attack in Austenitic Stainless Steels

E 8 Test Methods of Tension Testing of Metallic Materials

E 10 Test Method for Brinell Hardness of Metallic Materials

E 18 Test Methods for Rockwell Hardness and Rockwell Superficial Hardness of Metallic Materials

E 29 Practice for Using Significant Digits in Test Data to Determine Conformance with Specifications

E 38 Methods for Chemical Analysis of Nickel-Chromium and Nickel-Chromium-Iron Alloys

E 140 Standard Hardness Conversion Tables for Metals (Relationship Between Brinell Hardness, Vickers Hardness, Rockwell Hardness, Rockwell Superficial Hardness, and Knoop Hardness)

E 353 Test Methods for Chemical Analysis of Stainless, Heat-Resisting, Maraging, and Other Similar Chromium-Nickel-Iron Alloys

3. Terminology

3.1 *Descriptions of Terms Specific to This Standard:*

3.1.1 The terms plate, sheet, and strip as used in this specification are defined as follows:

3.1.1.1 *cold rolled plate* — material $^{3}/_{16}$ to $^{3}/_{8}$ in. (4.76 to 9.52 mm), inclusive in thickness and over 10 in. (254.0 mm) in width.

3.1.1.2 *hot rolled plate* — material $^{3}/_{16}$ in. (4.76 mm) and over in thickness and over 10 in. (254.0 mm) in width.

3.1.1.3 *plate* — material $^{3}/_{16}$ in. (4.75 mm) and over in thickness and over 10 in. (254.0 mm) in width.

3.1.1.4 *sheet* — material under $^{3}/_{16}$ in. (4.75 mm) in thickness and 24. in (609.6 mm) and over in width. Material under $^{3}/_{16}$ in. (4.75 mm) in thickness and in all widths with No. 4 finish.

3.1.1.5 *strip* — material under $^{3}/_{16}$ in. (4.75 mm) in thickness and under 24 in. (609.6 mm) in width.

4. Ordering Information

4.1 Orders for material under this specification shall include the following information:

4.1.1 Quantity (weight or number of pieces),

4.1.2 Name of material or UNS number,

4.1.3 Form (plate, sheet or strip),

4.1.4 Dimensions,

4.1.5 Type edge required (for strip only) (8.4.1),

4.1.6 Finish (Section 9). For sheet with No. 4 Finish, specify whether one or both sides are to be polished,

4.1.7 Certification (Section 16). State if certification or a report of test results is required,

4.1.8 ASTM designation, and

4.1.9 Supplementary requirements.

NOTE 1 — A typical ordering description is as follows : 200 sheets (UNS number) 0.060 by 48 by 120 in. (1.5 mm by 1.2 m by 3 m) No. 2D Finish in accordance with Specification B 463.

TABLE 1
CHEMICAL REQUIREMENTS

Element	Composition, %		
	UNS N08026	UNS N08020	UNS N08024
Carbon, max	0.03	0.07	0.03
Manganese, max	1.00	2.00	1.00
Phosphorus, max	0.03	0.045	0.035
Sulfur, max	0.03	0.035	0.035
Silicon, max	0.50	1.00	0.50
Nickel	33.00–37.20	32.00–38.00	35.00–40.00
Chromium	22.00–26.00	19.00–21.00	22.50–25.00
Molybdenum	5.00–6.70	2.00–3.00	3.50–5.00
Copper	2.00–4.00	3.00–4.00	0.50–1.50
Columbium (Nb) + tantalum	...	8 × carbon-1.00	0.15–0.35
Nitrogen	0.10–0.16	...	...
Iron	remainder[A]	remainder[A]	remainder

[A] By difference.

5. Material and Manufacture

5.1 *Heat Treatment* — UNS N08020 Alloy shall be furnished in the stabilize-annealed condition. UNS N08026 Alloy shall be furnished in the solution-annealed condition. UNS N08024 Alloy shall be furnished in the annealed condition.

NOTE 2 — The recommended annealing temperatures are 1800 to 1850°F (982 to 1010°C) for UNS N08020, 2050 to 2200°F (1121 to 1204°C) for UNS N08026, and 1925 to 1975°F (1052 to 1079°C) for UNS N08024.

6. Chemical Composition

6.1 The material shall conform to the composition limits specified in Table 1.

6.2 If a product analysis is performed by the purchaser, the material shall conform to the composition limits specified in Table 1 subject to the product analysis tolerances specified in Table 2.

7. Mechanical Properties

7.1 *Mechanical Properties* — The material shall conform to the mechanical property requirements specified in Table 3.

8. Dimensions and Permissible Variations

8.1 *Sheet* — The material referred to as sheet shall conform to the variations in dimensions specified in Tables 4 to 12, inclusive.

8.2 *Cold-Rolled Strip* — The material referred to as cold-rolled strip shall conform to the permissible variations in dimensions specified in Tables 13 to 17, inclusive.

8.3 *Plate* — The material referred to as plate shall conform to the permissible variations in dimensions specified in Tables 18 to 24, inclusive.

8.4 *Edges for Cold-Rolled Strip* — The various types of edges procurable shall be as follows:

8.4.1 *No. 1 Edge* — Rolled-edge, either round or square as specified.

8.4.2 *No. 3 Edge* — An edge produced by slitting.

8.4.3 *No. 5 Edge* — Approximately square edge produced by rolling or filing, or both, after slitting.

9. Workmanship, Finish, and Appearance

9.1 The material shall correspond to the designated finishes as described by the following:

9.1.1 *Sheet* — The various types of finish on sheet products shall be as follows:

9.1.1.1 *No. 1 Finish* — Hot-rolled, annealed, and descaled.

9.1.1.2 *No. 2D Finish* — Dull, cold-rolled finish.

9.1.1.3 *No. 2B Finish* — Bright, cold-rolled finish.

9.1.1.4 *No. 4 Finish* — General-purpose, polished finish. Following initial grinding with coarser abrasives, sheets are generally finished last with abrasives approximately 120 to 150 mesh. Sheets can be produced with one or two sides polished. When polished on one side only, the other side may be rough ground in order to obtain the necessary flatness.

9.1.1.5 *Bright-Annealed* — Bright finish produced by cold-rolling and annealing in a protective atmosphere.

TABLE 2
PRODUCT ANALYSIS TOLERANCES

Element	Tolerances Over the Maximum Limit or Under the Minimum Limit		
	UNS N08026	UNS N08020	UNS N08024
Carbon	0.005	0.01	0.005
Manganese	0.03	0.04	0.03
Phosphorus	0.005	0.005	0.005
Sulfur	0.005	0.005	0.005
Silicon	0.05	0.05	0.05
Chromium	0.25	0.25	0.25
Nickel	0.30	0.30	0.30
Molybdenum	0.10	0.10	0.10
Columbium (Nb) + tantalum	...	0.05	0.05
Copper	0.10	0.10	0.10
Nitrogen	0.01	...	...

TABLE 3
MECHANICAL PROPERTY REQUIREMENTS

Tensile Strength, min		Yield Strength,[A] min		Elongation[B] in 2 in. (50.8 mm), min, %
ksi	MPa	ksi	MPa	
80	551	35	241	30.0

Hardness Number, max[C]	
Brinell	Rockwell B
217	95

[A] Yield strength shall be determined by the offset method at 0.2% limiting permanent set in accordance with Test Methods E 8. An alternative method of determining yield strength may be based on a total extension under load of 0.5%.

[B] Elongation for thickness, less than 0.015 in. (0.38 mm) shall be 20% minimum, in 1 in. (25.4 mm).

[C] Either Brinell or Rockwell B hardness is permissible.

9.1.2 *Strip* — The type of finish procurable on cold-rolled strip shall be as follows:

9.1.2.1 *No. 1 Finish* — Cold-rolled, annealed, and descaled.

9.1.2.2 *Bright-Annealed* — Bright finish produced by cold-rolling and annealing in a protective atmosphere.

9.1.3 *Plate* — The types of finish procurable on plates shall be as follows:

9.1.3.1 *No. 1 Finish* — Hot-rolled, annealed, and descaled.

9.1.3.2 *No. 1 Finish* — Cold-rolled, annealed, and descaled.

9.2 Sheet with No. 1, No. 2B, No. 2D or bright-annealed surface, strip with No. 1 or bright-annealed surface, and any plate may be ground to remove surface imperfections providing such grinding does not reduce the thickness or width at any point beyond the permissible variations in dimensions.

10. Sampling

10.1 *Lots for Chemical Analysis and Mechanical Testing:*

10.1.1 A lot for chemical analysis shall consist of one heat.

10.1.2 *Plate* — A lot of plate for mechanical testing shall consist of the product resulting from the rolling of one heat of material to the same nominal thickness, but in no case more than 25 000 lb (11 340 kg).

10.1.3 *Sheet and Strip* — A lot of sheet and strip for mechanical testing shall consist of material from one heat in the same condition, finish and nominal thickness, but in no case more than 25 000 lb (11 340 kg).

NOTE 3 — Where material cannot be identified by heat, a lot shall consist of not more than 500 lb (227 kg) of material in the same thickness and condition, except that for plates weighing over 500 lb, only one specimen shall be taken.

10.2 *Sampling for Chemical Analysis:*

10.2.1 A representative sample shall be taken from each heat during pouring or subsequent processing.

10.2.2 Product analysis, if performed, shall be wholly the responsibility of the purchaser.

10.3 *Sampling for Mechanical Tests:*

10.3.1 A sample of the material to provide test specimens for mechanical tests shall be taken from such

TABLE 4
PERMISSIBLE VARIATIONS IN THICKNESS FOR HOT-ROLLED SHEETS IN CUT LENGTHS, COLD-ROLLED SHEETS IN CUT LENGTHS AND COILS

Specified Thickness,[A] in. (mm)	Permissible Variations, Over and Under[B]	
	in.	mm
Over 0.145 (3.68) to less than 3/16 (4.76)	0.014	0.36
Over 0.130 (3.30) to 0.145 (3.68), incl	0.012	0.30
Over 0.114 (2.90) to 0.130 (3.30), incl	0.010	0.25
Over 0.098 (2.49) to 0.114 (2.90), incl	0.009	0.23
Over 0.083 (2.11) to 0.098 (2.49), incl	0.008	0.20
Over 0.072 (1.83) to 0.083 (2.11), incl	0.007	0.18
Over 0.058 (1.47) to 0.072 (1.83), incl	0.006	0.15
Over 0.040 (1.02) to 0.058 (1.47), incl	0.005	0.13
Over 0.026 (0.66) to 0.040 (1.02), incl	0.004	0.10
Over 0.016 (0.41) to 0.026 (0.66), incl	0.003	0.08
Over 0.007 (0.18) to 0.016 (0.41), incl	0.002	0.05
Over 0.005 (0.13) to 0.007 (0.18), incl	0.0015	0.04
0.005 (0.13)	0.001	0.03

[A] Thickness measurements are taken at least 3/8 in. (9.52 mm) from the edge of the sheet.
[B] Cold-rolled sheets in cut lengths and coils are produced in some type numbers and some widths and thicknesses to tolerances less than those shown in the table.

TABLE 5
PERMISSIBLE VARIATIONS IN WIDTH AND LENGTH FOR HOT-ROLLED RESQUARED SHEETS (STRETCHER LEVELED STANDARD OF FLATNESS)

Specified Dimensions, in. (mm)	Tolerances Over		Under
	in.	mm	
For thicknesses under 0.131 (3.33):			
Widths up to 48 (1219), excl	1/16	1.59	0
Widths 48 (1219) and over	1/8	3.18	0
Lengths up to 120 (3048), excl	1/16	1.59	0
Lengths 120 (3048) and over	1/8	3.18	0
For thicknesses 0.131 (3.33) and over:			
All widths and lengths	1/4	6.35	0

NOTE — Polished sheets with Finishes No. 4 and higher are produced to tolerances given in this table.

a location in each lot as to be representative of that lot.

10.3.2 When samples are to be taken after delivery, the purchaser of material ordered to cut lengths may request on the purchase order additional material of adequate size to provide sample coupons for inspection purposes.

11. Number of Tests

11.1 *Chemical Analysis* — One test per lot.

11.2 *Mechanical Properties* — In the case of sheet or strip supplied in coil form, one tension test and one hardness test shall be made on specimens taken from each end of a coil representing the lot. When material is supplied in flat sheet, flat strip or plate, one tension and one hardness test shall be made on each 100 or less sheets, strips or plates of the same lot.

TABLE 6
PERMISSIBLE VARIATIONS IN WEIGHT FOR HOT-ROLLED AND COLD-ROLLED SHEETS

Any item of five sheets or less, or any item estimated to weigh 200 lb (90.72 kg) or less, may actually weigh as much as 10% over the theoretical weight	weight 200 lb (90.72 kg) or less
Any item of more than five sheets and estimated to weigh more than 200 lb (90.72 kg), may actually weigh as much as 7 1/2% over the theoretical weight	weight more than 200 lb (90.72 kg)
Chromium-manganese-nickel	40.7 lb/ft^2·in. thickness (7.82 kg/m^2·mm thickness)
Chromiun-nickel	42.0 lb/ft^2·in. thickness (8.07 kg/m^2·mm thickness)
Chromium	41.2 lb/ft^2·in. thickness (7.92 kg/m^2·mm thickness)

TABLE 7
PERMISSIBLE VARIATIONS IN WIDTH FOR HOT-ROLLED AND COLD-ROLLED SHEETS NOT RESQUARED AND COLD-ROLLED COILS

Specified Thickness, in. (mm)	Tolerances for Specified Width, in. (mm)	
	24 (610) to 48 (1219), excl	48 (1219) and Over
Less than 3/16 (4.76)	1/16 (1.59) over, 0 under	1/8 (3.18) over, 0 under

TABLE 8
PERMISSIBLE VARIATIONS IN LENGTH FOR HOT-ROLLED AND COLD-ROLLED SHEETS NOT RESQUARED

Length, ft (mm)	Tolerances, in. (mm)
Up to 10 (3048), incl	1/4 (6.35) over, 0 under
Over 10 (3048) to 20 (6096), incl	1/2 (12.70) over, 0 under

TABLE 9
PERMISSIBLE VARIATIONS IN CAMBER FOR HOT-ROLLED AND COLD-ROLLED SHEETS NOT RESQUARED AND COLD-ROLLED COILS[A]

Specified Width, in. (mm)	Tolerances per Unit Length of Any 8 ft (2438 mm), in. (mm)
24 (610) to 36 (914), incl	1/8 (3.18)
Over 36 (914)	3/32 (2.38)

[A] Camber is the greatest deviation of a side edge from a straight line and measurement is taken by placing an 8-ft (2438-mm) straightedge on the concave side and measuring the greatest distance between the sheet edge and the straightedge.

11.2.1 If any specimens selected to represent any heat fail to meet any of the test requirements, the material represented by such specimens may be reworked and resubmitted for test.

12. Specimen Preparation

12.1 Tension test specimens shall be taken from material in the final condition (temper) and tested transverse to the direction of rolling when width will permit.

13. Test Methods

13.1 Determine the chemical composition and mechanical properties of the material enumerated in this specification, in case of disagreement, in accordance with the following methods:

Test	ASTM Designations
Chemical analysis	E 38, E 353[A,B]
Tension	E 8
Brinell hardness	E 10
Rockwell hardness	E 18
Hardness conversions	E 140
Rounding procedure	E 29

[A] Iron shall be determined arithmetically by difference.
[B] Methods E 38 is to be used only for elements not covered by Test Methods E 353.

TABLE 10
PERMISSIBLE VARIATIONS IN FLATNESS FOR HOT-ROLLED AND COLD-ROLLED SHEETS SPECIFIED TO STRETCHER-LEVELED STANDARD OF FLATNESS

Specified Thickness, in. (mm)	Width, in. (mm)	Length, in. (mm)	Flatness Tolerance,[A] in. (mm)
Under 3/16 (4.76)	to 48 (1219), incl	to 96 (2438), incl	1/8 (3.18)
Under 3/16 (4.76)	to 48 (1219), incl	over 96 (2438)	1/4 (6.35)
Under 3/16 (4.76)	over 48 (1219)	to 96 (2438), incl	1/4 (6.35)
Under 3/16 (4.76)	over 48 (1219)	over 96 (2438)	1/4 (6.35)

[A] Maximum deviation from a horizontal flat surface.

TABLE 11
PERMISSIBLE VARIATIONS IN FLATNESS FOR HOT-ROLLED AND COLD-ROLLED SHEETS NOT SPECIFIED ON STRETCHER-LEVELED STANDARD OF FLATNESS NOT INCLUDING DEAD-SOFT AND DEEP-DRAWING SHEETS

Specified Thickness, in. (mm)	Width, in. (mm)	Flatness Tolerance,[A] in. (mm)
0.062 (1.57) and over	to 60 (1524), incl	1/2 (12.70)
	over 60 (1524) to 72 (1829), incl	3/4 (19.05)
	over 72 (1829)	1 (25.40)
Under 0.062 (1.57)	to 36 (914), incl	1/2 (12.70)
	over 36 (914) to 60 (1524), incl	3/4 (19.05)
	over 60 (1524)	1 (25.40)

[A] Maximum deviation from a horizontal flat surface.

TABLE 12
PERMISSIBLE VARIATIONS IN DIAMETER FOR HOT-ROLLED AND COLD-ROLLED SHEETS, SHEARED CIRCLES

	Tolerance Over Specified Diameter (No Tolerance Under), in. (mm)		
Specified Thickness, in. (mm)	Diameters Under 30 in. (762)	Diameters 30 (762) to 48 in. (1219)	Diameters Over 48 in. (1219)
0.0972 (2.46) and thicker	1/8 (3.18)	3/16 (4.76)	1/4 (6.35)
0.0971 (2.46) to 0.0568 (1.44), incl	3/32 (2.38)	5/32 (3.97)	7/32 (5.56)
0.0567 (1.44) and thinner	1/16 (1.59)	1/8 (3.18)	3/16 (4.76)

TABLE 13
PERMISSIBLE VARIATIONS IN THICKNESS FOR COLD-ROLLED STRIP IN COILS AND CUT LENGTHS

	Thickness Tolerances for the Thickness and Widths Given Over and Under, in. (mm)		
	Width, in. (mm)		
Specified Thickness, in. (mm)	3/16 (4.76) to 6 (152), incl	Over 6 (152) to 12 (305), incl	Over 12 (305) to 24 (610), excl
	Thickness Tolerances[A]		
0.005 (0.13) to 0.010 (0.25), incl	10%	10%	10%
Over 0.010 (0.25) to 0.011 (0.28), incl	0.0015 (0.04)	0.0015 (0.04)	0.0015 (0.04)
Over 0.011 (0.28) to 0.013 (0.33), incl	0.0015 (0.04)	0.0015 (0.04)	0.002 (0.05)
Over 0.013 (0.33) to 0.017 (0.43), incl	0.0015 (0.04)	0.002 (0.05)	0.002 (0.05)
Over 0.017 (0.43) to 0.020 (0.51), incl	0.0015 (0.04)	0.002 (0.05)	0.0025 (0.06)
Over 0.020 (0.51) to 0.029 (0.74), incl	0.002 (0.05)	0.0025 (0.06)	0.0025 (0.06)
Over 0.029 (0.74) to 0.035 (0.89), incl	0.002 (0.05)	0.003 (0.08)	0.003 (0.08)
Over 0.035 (0.89) to 0.050 (1.27), incl	0.0025 (0.06)	0.0035 (0.09)	0.0035 (0.09)
Over 0.050 (1.27) to 0.069 (1.75), incl	0.003 (0.08)	0.0035 (0.09)	0.0035 (0.09)
Over 0.069 (1.75) to 0.100 (2.54), incl	0.003 (0.08)	0.004 (0.10)	0.005 (0.13)
Over 0.100 (2.54) to 0.125 (2.98), incl	0.004 (0.10)	0.0045 (0.11)	0.005 (0.13)
Over 0.125 (2.98) to 0.161 (4.09), incl	0.0045 (0.11)	0.0045 (0.11)	0.005 (0.13)
Over 0.161 (4.09) to under 3/16 (4.76)	0.005 (0.13)	0.005 (0.13)	0.006 (0.15)

NOTE 1 — Thickness measurements are taken at least 3/8 in. (9.52 mm) in from the edge of the strip except that on widths less than 1 in. (25.4 mm), the tolerances are applicable for measurements at all locations.

NOTE 2—The tolerances in this table include crown tolerances.

[A] Thickness tolerances given in inches (millimetres) unless otherwise indicated.

TABLE 14
PERMISSIBLE VARIATIONS IN WIDTH FOR COLD-ROLLED STRIP IN COILS AND CUT LENGTHS FOR EDGE NOS. 1 AND 5

Specified Edge No.	Width, in. (mm)	Thickness, in. (mm)	Width Tolerance for Thickness and Width Given, in. (mm) Over	Under
1 and 5	9/32 (7.14) and under	1/16 (1.59) and under	0.005 (0.13)	0.005 (0.13)
1 and 5	over 9/32 (7.14) to 3/4 (19.05), incl	3/32 (2.38) and under	0.005 (0.13)	0.005 (0.13)
1 and 5	over 3/4 (19.05) to 5 (127), incl	1/8 (3.18) and under	0.005 (0.13)	0.005 (0.13)
5	over 5 (127.00) to 9 (228.60), incl	1/8 (3.18) to 0.008 (0.20), incl	0.010 (0.25)	0.010 (0.25)
5	over 9 (228.60) to 20 (508.00), incl	0.105 (2.67) to 0.015 (0.38)	0.010 (0.25)	0.010 (0.25)
5	over 20 (508.00)	0.080 (2.03) to 0.023 (0.58)	0.015 (0.38)	0.015 (0.38)

TABLE 15
PERMISSIBLE VARIATIONS IN LENGTH FOR COLD-ROLLED STRIP IN COILS AND CUT LENGTHS FOR EDGE NO. 3

Specified Thickness, in. (mm)	Width Tolerance, Over and Under, for Thickness and Width Given, in. (mm): under 1/2 (12.70) to 3/16 (4.76), incl	1/2 (12.70) to 6 (152.40), incl	Over 6 (152.40) to 9 (228.60), incl	Over 9 (228.60) to 12 (304.80), incl	Over 12 (304.80) to 20 (508.00), incl	Over 20 (508.00) to 24 (609.60), incl
Under 3/16 (4.76) to 0.161 (4.09), incl	...	0.016	0.020	0.020	0.031	0.031
	...	(0.41)	(0.51)	(0.51)	(0.79)	(0.79)
0.160 (4.06) to 0.100 (2.54), incl	0.010	0.010	0.016	0.016	0.020	0.020
	(0.25)	(0.25)	(0.41)	(0.41)	(0.51)	(0.51)
0.099 (2.51) to 0.069 (1.75), incl	0.008	0.008	0.010	0.010	0.016	0.020
	(0.20)	(0.20)	(0.25)	(0.25)	(0.41)	(0.51)
0.068 (1.73) and under	0.005	0.005	0.005	0.010	0.016	0.020
	(0.13)	(0.13)	(0.13)	(0.25)	(0.41)	(0.51)

TABLE 16
PERMISSIBLE VARIATIONS IN LENGTH FOR COLD-ROLLED STRIP IN CUT LENGTHS

Specified Length, ft (mm)	Tolerance Over Specified Length (No Tolerance Under), in. (mm)
To 5 (1524), incl	3/8 (9.52)
Over 5 (1524) to 10 (3048), incl	1/2 (12.70)
Over 10 (3048) to 20 (6096), incl	5/8 (15.88)

TABLE 17
PERMISSIBLE VARIATIONS IN CAMBER FOR COLD-ROLLED STRIP IN COILS AND CUT LENGTHS[A]

Specified Width, in. (mm)	Tolerance per Unit Length of Any 8 ft (2438 mm), in. (mm)
To 1 1/2 (38.10), incl	1/2 (12.70)
Over 1 1/2 (38.10) to 24 (609.60), excl	1/4 (6.35)

[A] Camber is the deviation of a side edge from a straight line and measurement is taken by placing an 8-ft (2438-mm) straightedge on the concave side and measuring the greatest distance between the strip edge and the straightedge.

TABLE 18
PERMISSIBLE VARIATIONS IN THICKNESS FOR PLATES[A]

Specified Thickness[B] in. (mm)	Width, in. (mm)			
	To 84 (2134), incl	Over 84 (2134) to 120 (3048), incl	Over 120 (3048) to 144 (3658), incl	Over 144 (3658)
	Tolerance Over Specified Thickness[C] in. (mm)			
3/16 (4.76) to 3/8 (9.52), excl	0.045 (1.14)	0.050 (1.27)	...	...
3/8 (9.52) to 3/4 (19.05), excl	0.055 (1.40)	0.060 (1.52)	0.075 (1.90)	0.090 (2.29)
3/4 (19.05) to 1 (25.40), excl	0.060 (1.52)	0.065 (1.65)	0.085 (2.16)	0.100 (2.54)
1 (25.40) to 2 (50.80), excl	0.070 (1.78)	0.075 (1.90)	0.095 (2.41)	0.115 (2.92)

[A] Thickness is measured along the longitudinal edges of the plate at least 3/8 in. (9.52 mm), but not more than 3 in. (76.20 mm), from the edge.

[B] Plates over 2 in. (50.80 mm) thick are produced. Thickness tolerances for such plates are not included.

[C] For circles, the over thickness tolerances in this table apply to the diameter of the circle corresponding to the width ranges shown. For plates of irregular shape, the over thickness tolerances apply to the greatest width corresponding to the width ranges shown. For plates up to 2 in. (50.80 mm), inclusive, in thickness, the tolerance under the specified thickness is 0.010 in. (0.25 mm).

13.2 For purposes of determining compliance with the limits in this specification, round an observed value or a calculated value as indicated in accordance with the rounding method of Practice E 29 as follows:

Test	Rounded Unit for Observed or Calculated Value
Chemical composition hardness and tolerances (when expressed in decimals)	nearest unit in the last right-hand place of figures of the specified limit
Tensile strength and yield strength	nearest 1 000 psi (7 MPa)
Elongation	Nearest 1%

14. Inspection

14.1 Inspection of the material shall be agreed upon between the purchaser and the supplier as part of the purchase contract.

15. Rejection and Rehearing

15.1 Material, tested by the purchaser, that fails to conform to the requirements of this specification may be rejected. Rejection should be reported to the producer or supplier promptly and in writing. In case of dissatisfaction with the results of the test, the producer or supplier may make claim for a rehearing.

16. Certification

16.1 A producer's or supplier's certification shall be furnished to the purchaser that the material was manufactured, sampled, tested, and inspected in accordance with this specification and has been found to meet the requirements. When specified in the purchase order or contract, a report of the test results shall be furnished.

17. Product Marking

17.1 Each plate, sheet, or strip shall be marked on one face with the alloy designation or UNS number, specification number, heat number, manufacturer's identification, and size. The markings shall have no deleterious effect on the material or its performance and shall be sufficiently stable to withstand normal handling.

17.2 Each bundle or shipping container shall be marked with the name of the material, specification number, the size, gross, tare, and net weight, consignor and consignee address, contract or order number, and such other information as may be required by the contract or order.

TABLE 19
PERMISSIBLE VARIATIONS IN WIDTH AND LENGTH FOR RECTANGULAR SHEARED MILL PLATES AND UNIVERSAL MILL PLATES

		Tolerances Over Specified Width and Length for Given Width, Length, and Thickness,[A] in. (mm)					
		Under 3/8 in. (9.52 mm) in Thickness		3/8 (9.52) to 1/2 (12.70) mm) in., incl, in Thickness		Over 1/2 (12.70 mm) to 1 in. (25.40 mm) in Thickness[B]	
Width, in. (mm)	Length, in. (mm)	Width	Length	Width	Length	Width	Length
48 (1219) and under	144 (3658) and under	1/8 (3.18)	3/16 (4.76)	3/16 (4.76)	1/4 (6.35)	5/16 (7.94)	3/8 (9.52)
Over 48 (1219) to 60 (1524), incl		3/16 (4.76)	1/4 (6.35)	1/4 (6.35)	5/16 (7.94)	3/8 (9.52)	7/16 (11.11)
Over 60 (1524) to 84 (2134), incl		1/4 (6.35)	5/16 (7.94)	5/16 (7.94)	3/8 (9.52)	7/16 (11.11)	1/2 (12.70)
Over 84 (2134) to 108 (2743), incl		5/16 (7.94)	3/8 (9.52)	3/8 (9.52)	7/16 (11.11)	1/2 (12.70)	9/16 (14.29)
Over 108 (2743)		3/8 (9.52)	7/16 (11.11)	7/16 (11.11)	1/2 (12.70)	5/8 (15.88)	11/16 (17.46)
48 (1219) and under	over 144 (3658) to 240 (6096)	3/16 (4.76)	3/8 (9.52)	1/4 (6.35)	1/2 (12.70)	5/16 (7.94)	5/8 (15.88)
Over 48 (1219) to 60 (1524), incl		1/4 (6.35)	7/16 (11.11)	5/16 (7.94)	5/8 (15.88)	3/8 (9.52)	3/4 (19.05)
Over 60 (1524) to 84 (2134), incl		3/8 (9.52)	1/2 (12.70)	7/16 (11.11)	11/16 (17.46)	1/2 (12.70)	3/4 (19.05)
Over 84 (2134) to 108 (2743), incl		7/16 (11.11)	9/16 (14.29)	1/2 (12.70)	3/4 (19.05)	5/8 (15.88)	7/8 (22.22)
Over 108 (2743)		1/2 (12.70)	5/8 (15.88)	5/8 (15.88)	7/8 (22.22)	11/16 (17.46)	1 (25.40)
48 (1219) and under	over 240 (6096) to 360 (9144)	1/4 (6.35)	1/2 (12.70)	5/16 (7.94)	5/8 (15.88)	3/8 (9.52)	3/4 (19.05)
Over 48 (1219) to 60 (1524), incl		5/16 (7.94)	5/8 (15.88)	3/8 (9.52)	3/4 (19.05)	1/2 (12.70)	3/4 (19.05)
Over 60 (1524) to 84 (2134), incl		7/16 (11.11)	11/16 (17.46)	1/2 (12.70)	3/4 (19.05)	5/8 (15.88)	7/8 (22.22)
Over 84 (2134) to 108 (2743), incl		9/16 (14.29)	3/4 (19.05)	5/8 (15.88)	7/8 (22.22)	3/4 (19.05)	1 (25.40)
Over 108 (2743)		5/8 (15.88)	7/8 (22.22)	11/16 (17.46)	1 (25.40)	7/8 (22.22)	1 (25.40)
60 (1524) and under	over 360 (9144) to 480 (12192)	7/16 (11.11)	1 1/8 (28.58)	1/2 (12.70)	1 1/4 (31.75)	5/8 (15.88)	1 3/8 (34.92)
Over 60 (1524) to 84 (2134), incl		1/2 (12.70)	1 1/4 (31.75)	5/8 (15.88)	1 3/8 (34.92)	3/4 (19.05)	1 1/2 (38.10)
Over 84 (2134) to 108 (2743), incl		9/16 (14.29)	1 1/4 (31.75)	3/4 (19.05)	1 3/8 (34.92)	7/8 (22.22)	1 1/2 (38.10)
Over 108 (2743)		3/4 (19.05)	1 3/8 (34.92)	7/8 (22.22)	1 1/2 (38.10)	1 (25.40)	1 5/8 (41.28)
60 (1524) and under	over 480 (12192) to 600 (15240)	7/16 (11.11)	1 1/4 (31.75)	1/2 (12.70)	1 1/2 (38.10)	5/8 (15.88)	1 5/8 (41.28)
Over 60 (1524) to 84 (2134), incl		1/2 (12.70)	1 3/8 (34.92)	5/8 (15.88)	1 1/2 (38.10)	3/4 (19.05)	1 5/8 (41.28)
Over 84 (2134) to 108 (2743), incl		5/8 (15.88)	1 3/8 (34.92)	3/4 (19.05)	1 1/2 (38.10)	7/8 (22.22)	1 5/8 (41.28)
Over 108 (2743)		3/4 (19.05)	1 1/2 (38.10)	7/8 (22.22)	1 5/8 (41.28)	1 (25.40)	1 3/4 (44.45)
60 (1524) and under	over 600 (15240)	1/2 (12.70)	1 3/4 (44.45)	5/8 (15.88)	1 7/8 (47.62)	3/4 (19.05)	1 7/8 (47.62)
Over 60 (1524) to 84 (2134), incl		5/8 (15.88)	1 3/4 (44.45)	3/4 (19.05)	1 7/8 (47.62)	7/8 (22.22)	1 7/8 (47.62)
Over 84 (2134) to 108 (2743), incl		5/8 (15.88)	1 3/4 (44.45)	3/4 (19.05)	1 7/8 (47.62)	7/8 (22.22)	1 7/8 (47.62)
Over 108 (2743)		7/8 (22.22)	1 3/4 (44.45)	1 (25.40)	2 (50.80)	1 1/8 (28.58)	2 1/4 (57.15)

[A] The tolerance under specified width and length is 1/4 in. (6.35 mm).

[B] Rectangular plates over 1 in. (25.4 mm) in thickness are not commonly sheared and are machined or otherwise cut to length and width or produced in the size as rolled, uncropped.

TABLE 20
PERMISSIBLE VARIATIONS IN ANNEALED PLATES

Specified Thickness, in. (mm)	Flatness Tolerance (Deviation from a Horizontal Flat Surface) for Thicknesses and Widths Given, in. (mm)								
	Width, in. (mm)								
	48 (1219) or Under	Over 48 (1219) to 60 (1524), excl	60 (1524) to 72 (1829), excl	72 (1829) to 84 (2134), excl	84 (2134) to 96 (2438), excl	96 (2438) to 108 (2743), excl	108 (2743) to 120 (3048), excl	120 (3048) to 144 (3658), excl	144 (3658) and Over
3/16 (4.76) to 1/4 (6.35), excl	3/4 (19.05)	1 1/16 (26.99)	1 1/4 (31.75)	1 3/8 (34.92)	1 5/8 (41.28)	1 5/8 (41.28)	1 7/8 (47.62)	2 (50.80)	. . .
1/4 (6.35) to 3/8 (9.52), excl	11/16 (17.46)	3/4 (19.05)	15/16 (23.81)	1 1/8 (28.58)	1 3/8 (34.92)	1 7/16 (36.51)	1 9/16 (39.69)	7/8 (47.62)	. . .
3/8 (9.52) to 1/2 (12.70) excl	1/2 (12.70)	9/16 (14.29)	11/16 (17.46)	3/4 (19.05)	15/16 (23.81)	1 1/8 (28.58)	1 1/4 (31.75)	1 7/16 (36.51)	1 3/4 (44.45)
1/2 (12.70) to 3/4 (19.05) excl	1/2 (12.70)	9/16 (14.29)	5/8 (15.88)	5/8 (15.88)	13/16 (20.64)	1 1/8 (28.58)	1 1/8 (28.58)	1 1/8 (28.58)	1 3/8 (34.92)
3/4 (19.05) to 1 (25.40), excl	1/2 (12.70)	9/16 (14.29)	5/8 (15.88)	5/8 (15.88)	3/4 (19.05)	13/16 (20.64)	15/16 (23.81)	1 (25.40)	1 1/8 (28.58)
1 (25.40) to 1 1/2 (38.10), excl	1/2 (12.70)	9/16 (14.29)	9/16 (14.29)	9/16 (14.29)	11/16 (17.46)	11/16 (17.46)	11/16 (17.46)	3/4 (19.05)	1 (25.40)
1 1/2 (38.10) to 4 (101.60), excl	3/16 (4.76)	5/16 (7.94)	3/8 (9.52)	7/16 (11.11)	1/2 (12.70)	9/16 (14.29)	5/8 (15.88)	3/4 (19.05)	7/8 (22.22)
4 (101.60) to 6 (152.40), excl	1/4 (6.35)	3/8 (9.52)	1/2 (12.70)	9/16 (14.29)	5/8 (15.88)	3/4 (19.05)	7/8 (22.22)	1 (25.40)	1 1/8 (28.58)

NOTE 1 — Tolerances in this table apply to plates up to 15 ft (4572 mm) in length, or to any 15 ft or longer plates.

NOTE 2 — If the longer dimension is under 36 in. (914 mm), the tolerance is not greater than 1/4 in. (6.35 mm).

NOTE 3 — For plates with specified minimum yield strengths of 35 ksi (240 MPa) or more, the permissible variations are increased to 1 1/2 times the amounts shown below.

TABLE 21
PERMISSIBLE VARIATIONS IN CAMBER FOR SHEARED MILL AND UNIVERSAL MILL PLATES[A]

Maximum camber = 1/8 in. in any 5 ft = 3.18 mm in any 1.524 m

[A] Camber is the deviation of a side edge from a straight line, and measurement is taken by placing a 5-ft straightedge on the concave side and measuring the greatest distance between the plate and the straightedge.

TABLE 22
PERMISSIBLE VARIATIONS IN DIAMETER FOR CIRCULAR PLATES

Specified Diameter, in. (mm)	Tolerance Over Specified Diameter for Given Diameter and Thickness,[A] in. (mm)		
	To 3/8 (9.52), excl, in Thickness	3/8 (9.52) to 5/8 (15.88), excl in Thickness[B]	5/8 in. (15.88) and Over in Thickness[B]
To 60 (1524), excl	1/4 (6.35)	3/8 (9.52)	1/2 (12.70)
60 (1524) to 84 (2134), excl	5/16 (7.94)	7/16 (11.11)	9/16 (14.29)
84 (2134) to 108 (2743), excl	3/8 (9.52)	1/2 (12.70)	5/8 (15.88)
108 (2743) to 180 (4572), excl	7/16 (11.11)	9/16 (14.29)	11/16 (17.46)

[A] No tolerance under.

[B] Circular and sketch plates over 5/8 in. (15.88 mm) in thickness are not commonly sheared but are machined or flame cut.

TABLE 23
RECOMMENDED FLAME CUTTING ALLOWANCES TO CLEAN UP IN MACHINING PLATES, CIRCLES, RINGS, AND SKETCHES[A]

Specified Thickness, in. (mm)	Machining Allowance per Edge, in. (mm)
2 (50.80) and under	1/4 (6.35)
Over 2 (50.80) to 3 (76.20), incl	3/8 (9.52)
Over 3 (76.20) to 6 (152.40), incl	1/2 (12.70)

[A] Supplier assumes the appropriate clean-up allowances have been included in ordered dimension.

TABLE 24
PERMISSIBLE VARIATIONS IN ABRASIVE CUTTING WIDTH AND LENGTH FOR PLATES

Up to 1 1/4 (31.75), incl	1/8 (3.18)	1/8 (3.18)
Over 1 1/4 (31.75) to 2 3/4 (69.85), incl[B]	3/16 (4.76)	3/16 (4.76)

[A] The tolerance under specified width and length is 1/4 in. (3.18 mm).

[B] Width and length tolerances for abrasive cut plates over 2 3/4 in. (69.85 mm) thick are not included in this table.

SUPPLEMENTARY REQUIREMENTS

The following supplementary requirements shall be applied only when specified by the purchaser in the inquiry, contract or order.

S1. Corrosion Tests

S1.1 One intergranular corrosion test per lot shall be performed by the manufacturer on a sensitized specimen and tested in accordance with Practices A 262. When this supplementary requirement is specified, the specific practice (Practice B or Practice E) shall also be specified. If Practice B is specified, the specimen must pass with a rate of less than 0.002 inches per month. A lot for intergranular corrosion testing shall be the same as for mechanical testing.

S1.1.1 In addition to the anneal recommended in Note 2, the specimen shall be sensitized for 1 h at 1250°F (677°C) before being subjected to corrosion testing.

S1.1.2 If any corrosion test specimen fails the test, the material represented by such specimens may be reheat-treated and resubmitted for test.

SPECIFICATION FOR WELDED UNS N08020, UNS N08024, AND UNS N08026 ALLOY PIPE

SB-464

(Identical with ASTM Specification B 464-99 except that certification has been made mandatory.)

1. Scope

1.1 This specification covers welded UNS N08020, N08024, and N08026 alloy pipe for general corrosion-resisting and low- or high-temperature service.

1.2 The pipe covered is nominal pipe sizes up to and including NPS 6, with the nominal wall thicknesses given as Schedules 5S, 10S, and 40S and nominal pipe sizes up to and including NPS 2, also including Schedule 80S. Table 2 of Specification B 775 is based on Table A1 of ANSI B36.19 and gives the nominal dimensions of these sizes. Table 3 of Specification B 775 lists the dimensional requirements of these sizes. Pipe having other dimensions may be furnished provided such pipe complies with all other requirements of this specification.

1.3 The values stated in inch-pound units are to be regarded as the standard. The values given in parentheses are for information only.

2. Referenced Documents

2.1 *ASTM Standards:*

A 262 Practices for Detecting Susceptibility to Intergranular Attack in Austenitic Stainless Steels

B 775 Specification for General Requirements for Nickel and Nickel-Alloy Seamless and Welded Pipe

E 8 Test Methods for Tension Testing of Metallic Materials

2.2 *ANSI Standard:*

B36.19 Stainless Steel Pipe

3. General Requirement

3.1 Material furnished in accordance with this specification shall conform to the applicable requirements of the current edition of Specification B 775 unless otherwise provided herein.

4. Ordering Information

4.1 It is the responsibility of the purchaser to specify all requirements that are necessary for the safe and satisfactory performance of material ordered under this specification. Examples of such requirements include, but are not limited to, the following:

4.1.1 Quantity (feet or number of lengths),

4.1.2 UNS number,

4.1.3 Size (nominal pipe size and schedule),

4.1.4 Length (random or specific),

4.1.5 ASTM designation,

4.1.6 *Product Analysis* — State if required,

4.1.7 *Certification* — Certification and a report of test results are required,

4.1.8 *Purchaser Inspection* — State which tests or inspections are to be witnessed, if any, and

4.1.9 Supplementary requirements, if any.

5. Materials and Manufacture

5.1 The pipe shall be made from flat-rolled stock by an automatic welding process with no addition of filler metal.

5.2 *Heat Treatment* — Pipe of UNS N08020 alloy shall be furnished in the stabilized-annealed condition. Pipe of UNS N08024 alloy shall be furnished in the annealed condition. Pipe of UNS N08026 alloy shall be furnished in the solution-annealed condition.

TABLE 1
CHEMICAL REQUIREMENTS

Element	Composition, % UNS N08020	UNS N08024	UNS N08026
Carbon, max	0.07	0.03	0.03
Manganese, max	2.00	1.00	1.00
Phosphorus, max	0.045	0.035	0.03
Sulfur, max	0.035	0.035	0.03
Silicon, max	1.00	0.50	0.50
Nickel	32.00–38.00	35.00–40.00	33.00–37.20
Chromium	19.00–21.00	22.50–25.00	22.00–26.00
Molybdenum	2.00–3.00	3.50–5.00	5.00–6.70
Copper	3.00–4.00	0.50–1.50	2.00–4.00
Columbium (Nb) + tantalum	8× carbon–1.00	0.15–0.35	
Nitrogen	...	...	0.10–0.16
Iron[A]	Remainder	Remainder	Remainder

[A] By difference.

NOTE 1 — The recommended annealing temperatures are 1800 to 1850°F (982 to 1010°C) for UNS N08020, 1925 to 1975°F (1052 to 1079°C) for UNS N08024, and 2050 to 2200°F (1121 to 1204°C) for UNS N08026.

6. Chemical Composition

6.1 The material shall conform to the composition limits specified in Table 1. One test is required for each lot as defined in Specification B 775.

6.2 If a product analysis is performed, it shall meet the chemistry limits prescribed in Table 1, subject to the analysis tolerances specified in Table 1 of Specification B 775.

TABLE 2
MECHANICAL PROPERTY REQUIREMENTS

Tensile Strength, min, ksi (MPa)	Yield Strength,[A] min, ksi (MPa)	Elongation in 2 in. (50.8 mm), min, %
80 (551)	35 (241)	30.0

[A] Yield strength shall be determined by the offset method at 0.2% limiting permanent set in accordance with Test Methods E 8. An alternative method of determining yield strength may be based on total extension under load of 0.5%.

7. Mechanical Properties and Other Requirements

7.1 *Mechanical Properties* — The material shall conform to the mechanical property requirements specified in Table 2. One test is required for each lot as defined in Specification B 775.

7.2 *Flattening Test* — A flattening test shall be made on each end of one pipe per lot. Superficial ruptures resulting from surface imperfections shall not be cause for rejection.

7.3 *Nondestructive Test Requirements* — Each pipe shall be subjected to either a pressure test or a nondestructive electric test at the manufacturer's option. The purchaser may specify which test is to be used.

8. Lengths

8.1 Lengths may be ordered as either random lengths (normally 15 to 24 ft (4.6 to 7.3 m) with some agreed upon allowance for shorts) or specific cut lengths.

SUPPLEMENTARY REQUIREMENTS

The following supplementary requirements shall be applied only when specified by the purchaser in the inquiry, contract, or order:

S1. Corrosion Tests

S1.1 One intergranular corrosion test per lot shall be performed by the manufacturer on a sensitized specimen and tested in accordance with Practices A 262. When this supplementary requirement is specified, the specific practice (Practice B or Practice E) shall also be specified. If Practice B is specified, the specimen must pass with a rate of less than 0.002 in. (0.05 mm) per month. A lot for intergranular corrosion testing shall be the same as for mechanical testing.

S1.1.1 In addition to the anneal recommended in Note 1, the specimen shall be sensitized for 1 h at 1250°F (677°C) before being subjected to corrosion testing.

S1.1.2 If any corrosion test specimen fails the test, the material represented by such specimens may be reheat-treated and resubmitted for test.

SPECIFICATION FOR SEAMLESS COPPER-NICKEL PIPE AND TUBE

SB-466

(Identical with ASTM Specification B 466-92a for the alloys and tempers covered except for editorial differences. Certification and mechanical testing have been made mandatory.)

1. Scope

1.1 This specification covers seamless copper-nickel alloy pipe and tube in straight lengths suitable for general engineering purposes. The following three alloys are covered:

Copper Alloy UNS No.	Nominal Composition, %	
	Copper	Nickel
C70600	90	10
C71000	80	20
C71500	70	30

NOTE 1 — The UNS system for copper and copper alloys (see Recommended Practic E 527) is a simple expansion of the former standard designation system accomplished by the addition of a prefix "C" and a suffix "00." The suffix can be used to accommmodate composition variations of the base alloy.

2. Applicable Documents

2.1 The following documents of the issue in effect on date of material purchase form a part of this specification to the extent referenced herein:

2.1.1 *ASTM Standards:*

B 153 Test Method for Expansion (Pin Test) of Copper and Copper Alloy Pipe and Tubing

E 243 Recommended Practice for Electromagnetic (Eddy-Current) Testing of Seamless Copper and Copper-Alloy Tubes

E 527 Practice for Numbering Metals and Alloys (UNS)

2.1.2 *ASME Standard:*

SB-251 Specification for General Requirements for Wrought Seamless Copper and Copper-Alloy Tube

3. Terminology

3.1 *Description of Term Specific to This Standard:*

3.1.1 *capable of* — as used in this specification, that the test is not mandatory under the terms of this specification unless definitely specified in the purchase order; however, should subsequent testing by the purchaser establish that the material does not meet these requirements, the material may be rejected.

4. Ordering Information

4.1 Orders for material under this specification shall include the following information:

4.1.1 Quantity

4.1.2 Copper Alloy UNS No. (Section 1),

4.1.3 Temper (Section 6),

4.1.4 Dimensions, the diameter or distance between parallel surfaces and wall thickness (Appendix X1 and Section 8),

4.1.5 Length (see 8.4),

4.1.6 Total length of each size, and

4.1.7 If the product is to be subsequently welded (see Table 1 and Footnote B).

5. General Requirements

5.1 Material furnished under this specification shall conform to the applicable requirements of current edition of Specification SB-251.

6. Chemical Composition

6.1 The material shall conform to the chemical requirements specified in Table 1.

TABLE 1
CHEMICAL REQUIREMENTS

Copper Alloy UNS Nos.[A]	Composition, % Copper	Nickel incl Cobalt	Lead, max	Iron	Zinc, max	Manganese max	Sulfur, max	Phosphorus, max	Other Named Elements
C70600	remainder	9.0 to 11.0	0.05[B]	1.0 to 1.8	1.0[B]	1.0	0.02	0.02	[B]
C71000	remainder	19.0 to 23.0	0.05[B]	0.50 to 1.0	1.0[B]	1.0	0.02	0.02	[B]
C71500	remainder	29.0 to 33.0	0.05[B]	0.40 to 1.0	1.0[B]	1.0	0.02	0.02	[B]

[A] New designation established in accordance with Practice E 527.
[B] When the product is for subsequent welding applications, and so specified by the purchaser, zinc shall be 0.50% max, lead 0.02% max, and carbon 0.05% max.

6.2 These specification limits do not preclude the presence of other elements. Limits for unnamed elements may be established by agreement between manufacturer or supplier and purchaser.

6.2.1 For copper alloys in which copper is specified as the remainder, copper may be taken as the difference between the sum of all the elements analyzed and 100%.

6.2.1.1 When all the elements in Table 1 are analyzed, their sum shall be as shown in the following table:

Copper Alloy UNS No.	Copper Plus Named Elements, % min
C70600	99.5
C71000	99.5
C71500	99.5

7. Temper

7.1 The tube or pipe shall be supplied in the annealed temper only.

8. Mechanical Requirements

8.1 The material shall conform to the mechanical requirements prescribed in Table 2.

TABLE 2
MECHANICAL REQUIREMENTS

Temper	Copper Alloy UNS Nos.	Tensile Strength, min ksi[A]	Yield Strength,[B] min ksi[A]	Rockwell[C] Hardness 30 T
Annealed[B]	C70600	38	13	45 max
	C71000	45	16	48 max
	C71500	52	18	51 max

[A] ksi = 1000 psi.
[B] At 0.5% extension under load.
[C] Rockwell hardness values shall apply only to tube or pipe having a wall thickness of 0.020 in. or over and an outside diameter of $^{5}/_{16}$ in. or over. For all other tube no Rockwell hardness values shall apply. Rockwell hardness tests shall be made on the inside surface of the tube. When suitable equipment is not available for determining the specified Rockwell hardness, other Rockwell scales and values may be specified subject to agreement between the manufacturer and the purchaser.
[D] Although no minimum grain size is specified, the product must nevertheless have a fully recrystallized grain structure.

9. Dimensions and Permissible Variations

9.1 *Wall Thickness Tolerances* — The wall thickness tolerances shall be in accordance with Table 3.

9.2 *Diameter Tolerances* — The diameter tolerances shall be in accordance with Table 4.

9.3 Tolerance on distance between parallel surfaces for tubes other than round shall be as agreed between supplier and purchaser.

9.4 The following tolerances shall be in accordance with the applicable subsections of Section 5 of the current edition of Specification SB-251, as follows:

9.4.1 *Length Tolerances* — See 5.5 and Tables 3 and 4.

9.4.2 *Roundness* — See 5.4

9.4.3 *Squareness of Cut* — See 5.6.

9.4.4 *Straightness Tolerances* — See 5.7.1 and Table 5.

10. Expansion Test for Round Pipe and Tube

10.1 The annealed material shall be capable of (Note 1) being expanded in accordance with Test Method B 153 to 30% of its outside diameter. The expanded material

TABLE 3
WALL THICKNESS TOLERANCES

Wall Thickness, in.	Outside Diameter,[A] in.						
	1/32 to 1/8, incl	Over 1/8 to 5/8, incl	Over 5/8 to 1, incl	Over 1 to 2, incl	Over 2 to 4, incl	Over 4 to 7, incl	Over 7 to 10, incl
Up to 0.017	0.0025	0.0015	0.002	0.0025	...	...	...
Over 0.017 to 0.024 incl	0.004	0.0025	0.0025	0.003	...	...	...
Over 0.024 to 0.034 incl	0.004	0.003	0.003	0.004	0.005	...	...
Over 0.034 to 0.057 incl	0.004	0.004	0.0045	0.0045	0.0065	0.009	...
Over 0.057 to 0.082 incl	...	0.0045	0.005	0.005	0.0075	0.010	0.013
Over 0.082 to 0.119 incl	...	0.005	0.0065	0.0065	0.009	0.011	0.014
Over 0.119 to 0.164 incl	...	0.007	0.007	0.0075	0.010	0.013	0.015
Over 0.164 to 0.219 incl	...	...	0.009	0.010	0.012	0.015	0.018
Over 0.219 to 0.283 incl	...	...	0.012	0.013	0.015	0.018	0.020
Over 0.283 to 0.379 incl	...	...	...	0.015	0.018	0.020	0.023
Over 0.379	...	...	...	6[B]	6[B]	8[B]	8[B]

NOTE — *Maximum deviation of any point:* The above tolerances are plus and minus; if tolerances all plus or all minus are desired, double the values given.

[A] When tube is ordered by outside and inside diameters, the maximum plus and minus deviation of the wall thickness from the nominal at any point shall not exceed the values given in this table by more than 50%.

[B] Percent of the specified wall thickness expressed to the nearest 0.001 in.

TABLE 4
AVERAGE DIAMETER[A] TOLERANCES

Specified Diameter, in.	Tolerance Applies to	Tolerances, plus and minus,[B] in. for Tubes of Copper Alloy UNS Nos. C70600, C71000, and C71500
Up to 1/8, incl	inside diameter	0.003
Up to 1/8, incl	outside diameter	0.0025
Over 1/8 to 5/8, incl	inside or outside	0.0025
Over 5/8 to 1, incl	inside or outside	0.003
Over 1 to 2, incl	inside or outside	0.004
Over 2 to 3, incl	inside or outside	0.005
Over 3 to 4, incl	inside or outside	0.006
Over 4 to 5, incl	inside or outside	0.008
Over 5 to 6, incl	inside or outside	0.009
Over 6 to 8, incl	inside or outside	0.010
Over 8 to 10, incl	inside or outside	0.013

[A] The average outside or inside diameter of a tube is the average of the maximum and minimum outside diameter, or of the maximum and minimum inside diameters, whichever is applicable, as determined at any one cross section of the tube.
[B] If tolerances all plus or all minus are desired, double the values given.

shall show no cracking or rupture visible to the unaided eye (Note 3).

NOTE 2 — The term "capable of" as used in this specification means that the test is not mandatory under the terms of this specification unless definitely specified in the purchase order, however, should subsequent testing by the purchaser estbalish that the material does not meet these requirements, the material may be rejected.

NOTE 3 — The term "unaided eye" as used herein permits the use of corrective spectacles necessary to obtain normal vision.

10.2 As an alternative to the expansion test for material over 4 in. in diameter in the annealed condition, a section 18 in. in length shall be cut from the end of the lengths for a flattening test. This 18-in. test specimen shall be flattened so that a gage set at three times the wall thickness shall pass freely throughout the flattened elements. The material so tested shall not show cracking or rupture clearly visible to the unaided eye (Note 3). In making the flattening test the elements shall be slowly flattened by one stroke of the press.

11. Nondestructive Tests for Round Pipe and Tube

11.1 The material shall be tested in the final size but may be tested prior to the final anneal or heat treatment, when these thermal treatments are required, unless otherwise agreed upon by the manufacturer or supplier and purchaser. By agreement between the manufacturer or supplier and purchaser additional testing of the materials by one of the methods in 11.3 or 11.4 may be required.

11.2 *Eddy-Current Test* — Each piece of material up to 3 1/8 in. nominal outside diameter or within the capabilities of the eddy-current tester, shall be subjected to an eddy-current test. Testing shall follow the procedures of Practice E 243. The material shall be passed through an eddy-current testing unit adjusted to provide information on the suitability of the material for the intended application.

11.2.1 Notch depth standards rounded to the nearest 0.001 in. shall be 22% of the nominal wall thickness. The notch depth tolerances shall be ±0.0005 in.

11.2.2 Material that does not actuate the signaling device of the eddy-current test shall be considered as conforming to the requirements of this test. Pipe with discontinuities indicated by the testing unit may be reexamined or retested, at the option of the manufacturer, to determine whether the discontinuity is cause for rejection. Signals that are found to have been caused by minor mechanical damage, soil, or moisture, shall not be cause for rejection of the material provided the dimensions are still within prescribed limits and the material is suitable for its intended application.

11.3 *Hydrostatic Test* — When specified, the material shall stand, without showing weakness or defects, an internal hydrostatic pressure sufficient to subject the material to a fiber stress of 7000 psi, determined by the

following equation for thin hollow cylinders under tension. The material need not be tested at a hydrostatic pressure of over 1000 psig, unless so specified.

$$P = 2St/(D - 0.8t)$$

where:

P = hydrostatic pressure, psi,
t = wall thickness of the material, in.,
D = outside diameter of the material, in., and
S = allowable stress of the material.

11.3.1 For material in straight lengths and less than $\frac{1}{2}$ in. in outside diameter and less than 0.060 in. in wall thickness, the test may be made at the option of the manufacturer by pneumatically testing to the requirements of 11.4.

11.4 *Pneumatic Test* — When specified, the material shall be subjected to an internal air pressure of 60 psig minimum for 5 s without showing evidence of leakage. The test method used shall permit easy visual detection of any leakage such as by having the material under water or by the pressure-differential method. Any evidence of leakage shall be cause for rejection.

12. Keywords

12.1 copper-nickel; pipe; seamless; tube

APPENDIX

(Nonmandatory Information)

X1. PREFERRED SIZES

X1.1 It is recommended that wherever possible, material purchased to this specification be ordered to the diameters and wall thicknesses indicated in Table X1.1.

TABLE X1.1
PREFERRED WALL THICKNESSES OR DRAWN SEAMLESS PIPE, BASED ON SPS DIAMETER

SPS, in.	Outside Diameter, in.	Wall Thicknesses						
		Specials					Regular, in.	Extra Strong, in.
		in.	in.	in.	in.	in.		
1/8	0.405	0.058	...	...	...	...	0.062	0.100
1/4	0.540	0.065	0.072	...	...	...	0.082	0.123
3/8	0.675	0.065	0.072	0.095	0.148	...	0.090	0.127
1/2	0.840	0.065	0.072	0.120	0.203	...	0.107	0.149
3/4	1.050	0.065	0.083	0.148	0.238	...	0.114	0.157
1	1.315	0.065	0.095	0.203	0.340	...	0.126	0.182
1 1/4	1.660	0.072	0.095	0.120	0.220	0.380	0.146	0.194
1 1/2	1.900	0.072	0.109	0.134	0.250	0.425	0.150	0.203
2	2.375	0.083	0.120	0.165	0.340	0.520	0.156	0.221
2 1/2	2.875	0.083	0.134	0.203	0.380	...	0.187	0.280
3	3.500	0.095	0.165	0.250	0.458	...	0.219	0.304
3 1/2	4.000	0.095	0.180	0.284	...	...	0.250	0.321
4	4.500	0.109	0.203	0.340	...	...	0.250	0.341
5	5.562	0.125	0.220	0.425	...	...	0.250	0.375
6	6.625	0.134	0.259	0.457	...	...	0.250	0.437

SPECIFICATION FOR WELDED COPPER-NICKEL PIPE

SB-467

(Identical with ASTM Specification B 467-88 except for the deletion of Appendix X2, and that the use of filler metal is prohibited. Certification and product specification marking are mandatory, and editorial differences exist.)

1. Scope

1.1 This specification covers welded copper-nickel alloy pipe for general engineering purposes. The following alloys are covered:

Copper Alloy UNS No.[A]	Previously Used Designation	Nominal Composition, %	
		Copper	Nickel
C70600	706	90	10
C71500	715	70	30

[A] The UNS system for copper and copper alloys (see Recommended Practic E 527) is a simple expansion of the former standard designation system accomplished by the addition of a prefix "C" and a suffix "00." The suffix can be used to accommmodate composition variations of the base alloy.

2. Referenced Documents

2.1 The following documents of the issue in effect on date of material purchase form a part of this specification to the extent referenced herein:

2.1.1 *ASTM Standards:*

B 153 Test Method for Expansion (Pin Test) of Copper and Copper Alloy Tubing

B 601 Practice for Temper Designations for Copper and Copper Alloys—Wrought and Cast

E 8 Methods of Tension Testing of Metallic Materials

E 29 Recommended Practice for Indicating Which Places of Figures Are to Be Considered Significant in Specified Limiting Values

E 55 Practice for Sampling Wrought Nonferrous Metals and Alloys for Determination of Chemical Composition

E 75 Methods for Chemical Analysis of Copper-Nickel and Copper-Nickel-Zinc Alloys

E 243 Practice for Electromagnetic (Eddy-Current) Testing of Seamless Copper and Copper-Alloy Tubes

E 527 Practice for Numbering Metals and Alloys (UNS)

2.1.2 *Other Documents:*

American Welding Society Specification A5.6

American Welding Society Specification A5.7

3. Terminology

3.1 *Definitions:*

3.1.1 *welded pipe* — product made from sheet, strip, or plate with a seam made by welding

3.1.2 *flash or bend* — weld metal that protrudes beyond the normal wall, both inside and outside

3.1.3 *scarfing* — the removing of flash or bead by a cutting operation

3.2 *Description of Term Specific to This Standard:*

3.2.1 *capable of* — as used in this specification, the test is not mandatory under the terms of this specification unless definitely specified in the purchase order; however, should subsequent testing by the purchaser establish that the material does not meet these requirements, the material may be rejected.

4. Ordering Information

4.1 Orders for material to this specification shall include the following information:

4.1.1 Copper Alloy UNS No. (Section 1 and Table 1),

4.1.2 Temper (Section 9),

4.1.3 Radiographic examination (Section 11),

4.1.4 Dimensions — diameter and wall thickness (see 10.2, 10.3),

4.1.5 Lengths — whether specific or stock (14.4.3),

4.1.6 Quantity of each size, and

TABLE 1
CHEMICAL REQUIREMENTS[A]

Copper Alloy UNS No[A]	Composition, %								
	Copper[B]	Nickel[C]	Lead,[D] max	Iron	Zinc,[D] max	Manganese, max	Sulfur, max	Phosphorus, max	Other Named Elements
C70600	remainder	9.0–11.0	0.05	1.0–1.8	1.0	1.0	0.02	0.02	[D]
C71500	remainder	29.0–33.0	0.05	0.40–1.0	1.0	1.0	0.02	0.02	[D]

[A] New designation established in accordance with Practice E 527.
[B] Silver counting as copper.
[C] Cobalt counting as nickel.
[D] When the product is for subsequent welding applications and so specified by the purchaser, zinc shall be 0.50% max, lead 0.02% max, and carbon 0.05% max.

4.1.7 If the product is to be subsequently welded (see Table 1 and Footnote E), and

4.1.8 Packing and marking (Section 19),

4.1.9 Mill test report, if required (Section 21).

5. Types of Welded Pipe

5.1 *As-Welded* — Pipe that has been welded with no further work performed other than straightening or cutting to length, or both.

5.2 *Welded and Annealed* — Welded pipe that has been annealed to produce a uniform grain size appropriate to the specified annealed temper.

5.3 *Welded and Cold Drawn* — Welded pipe with internal flash removed by scarfing, and subsequently cold drawn to conform to the specified temper.

5.4 *Fully Finished* — Welded pipe with internal and external flash removed scarfing and the pipe or tube subsequently cold drawn over a mandrel and annealed as necessary to conform to the specified temper.

6. Chemical Composition

6.1 The material shall conform to the composition limits specified in Table 1.

6.2 These specification limits do not preclude the presence of other elements. Limits for unnamed elements may be established by agreement between manufacturer or supplier and purchaser.

6.2.1 For copper alloys in which copper is specified as the remainder, copper may be taken as the difference between the sum of all the elements analyzed and 100%.

6.2.1.1 When all the elements in Table 1 are analyzed, their sum shall be 99.5% minimum.

7. Flash

7.1 If the pipe is made by the high-frequency welding process, the external flash shall always be removed. The internal flash shall be treated as one of the following.

7.1.1 *IFI* — Internal flash to remain in the "as-welded" condition,

7.1.2 *IFR* — Internal flash to be removed by scarfing, or

7.1.3 *IFD* — Internal flash to be displaced.

7.2 Unless other specified, the IFI condition will be furnished.

8. Filler Material

8.1 Welded Copper-Nickel Pipe shall be produced by a welding technique which does not require filler metal. Specifically, welding shall be accomplished using electric or high frequency resistance or other appropriate techniques which do not require filler material.

9. Temper

9.1 The pipe shall be supplied in any one of the following tempers as specified and shall meet the mechanical requirements of Tables 2, 3.

9.1.1 As welded from annealed sheet, strip, or plate (WM50),

9.1.2 As welded from cold-worked sheet, strip, or plate (WM00, WM01, WM02, etc.),

9.1.3 Welded and annealed (WO50),

9.1.4 Welded and cold drawn in either light drawn (Alloy C70600 only) or hard drawn, stress relieved (WR00), (WR04), or

9.1.5 Fully finished as annealed (WO61) light drawn (Alloy C70600 only), or hard drawn, stress relieved (WH00, WH04).

TABLE 2
MECHANICAL REQUIREMENTS OF AS-WELDED AND FULLY FINISHED PIPE WHEN FURNISHED IN THE ANNEALED TEMPER (W061)

Copper Alloy UNS No.	Outside Diameter, in.	Tensile Strength min, ksi	Yield Strength at 0.5 % Extension Under Load, min, ksi	Elongation in 2 in. min, %
C70600	up to 4½ incl	40	15	25.0
	over 4½	38	13	25.0
C71500	up to 4½ incl	50	20	30.0
	over 4½	45	15	30.0

TABLE 3
MECHANICAL REQUIREMENTS OF WELDED AND COLD-DRAWN AND FULLY-FINISHED PIPE IN DRAWN TEMPERS

Copper Alloy UNS No.	Outside Diameter, in.	Tensile Strength min, ksi[A]	Yield Strength at 0.5% Extension Under Load, min, ksi[A]	Elongation in 2 in. min, %
C71500	up to 2 incl, for wall thicknesses up to 0.048 incl	72	50	12.0
	for wall thicknesses over 0.048 in.	72	50	15.0

[A] ksi = 1000 psi.

TABLE 4
MECHANICAL REQUIREMENTS OF AS-WELDED PIPE

Copper Alloy No. (UNS No.)	Condition	Outside Diameter in.	Tensile Strength min. ksi	Yield Strength at 0.5% Extension Under Load, min, ksi
C70600	welded from annealed strip	up to 4½ incl	45	30
	welded from cold-rolled strip	up to 4½ incl	54	45

10. Sampling and Number of Tests

10.1 *Sampling* — The lot size, portion size, and selection of pieces shall be as follows:

10.1.1 *Lot Size:*

Outside Diameter, in.	Lot Size, lb
Up to 4 incl	10,000
Over 4	20,000

10.1.2 *Portion Size:*

No. of Pieces in Lot	No. of Sample Pieces to Be Taken
1 to 50	1
51 to 200	2
201 to 1500	3
Over 1500	0.2% of the total number of pieces in the lot

10.2 *Chemical Analysis* — Samples for chemical analysis shall be taken in accordance with Practice E 55. Drillings, milling, etc., shall be taken in approximately equal weight from each of the sample pieces selected in accordance with 10.1.2 and combined into one composite sample. The minimum weight of composite sample for chemical analysis shall be 150 g divided into three equal parts.

10.2.1 Instead of sampling in accordance with Practice E 55, the manufacturer shall have the option of determining conformance to chemical composition as follows: Conformance shall be determined by the manufacturer by analyzing samples taken at the time the castings are poured or samples taken from the semi-finished product. If the manufacturer determines the chemical composition of the material during the course of manufacture,

he shall not be required to sample and analyze the finished product. The number of samples taken for determination of chemical composition shall be as follows:

10.2.1.1 When samples are taken at the time the castings are poured, at least one sample shall be taken for each group of castings poured simultaneously from the same source of molten metal.

10.2.1.2 When samples are taken from the semi-finished product, a sample shall be taken to represent each 10,000 lb or fraction thereof, except that not more than one sample shall be required per piece.

10.2.1.3 Due to the discontinuous nature of the processing of castings into wrought products, it is not practical to identify specific castings analysis with a specific quantity of finished material.

10.2.1.4 In the event that heat identification or traceability is required, the purchaser shall specify the details desired.

10.3 *Tension Tests* — For the tension tests a specimen shall be taken from each of the pieces selected in accordance with 10.1. The required tension tests shall be made on each of the specimens so selected.

11. Retests

11.1 If any test specimen shows defective machining or develops flaws, it may be discarded and another specimen sutstituted.

11.2 If the percentage elongation of any tension test specimen is less than that specified and any part of the fracture is outside the middle two thirds of the gage length or in a punched or scribed mark within the reduced section, a retest shall be allowed.

11.3 If the results of any test made to determine the mechanical properties fail to meet the specified limits, this test shall be repeated on each of two additional specimens taken from different pieces and the results of both of these tests shall comply with the specified requirements.

11.4 If the chemical analysis fails to conform to the specified limits, analysis shall be made on a new composite sample prepared from additional pieces selected in accordance with 10.1. The results of this retest shall comply with the specified requirements.

12. Expansion Test for Pipe

12.1 The annealed material shall be capable of (see 3.2.1) being expanded in accordance with Test Method B 153. Pipe supplied in the "as welded" condition shall be expanded to 20% of its outside diameter.

12.2 The annealed ends of pipe furnished end annealed shall be capable of being expanded 30% of its outside diameter in accordance with Test Method B 153.

12.3 Pipe furnished in other tempers is not subject to this test.

13. Nondestructive Tests for Pipe

13.1 *Radiographic Examination* — Radiographic examination of the welds shall be as agreed upon.

13.2 *Eddy-Current Test* — Each pipe of nominal outside diameter within the capabilities of the eddy-current tester shall be subjected to an eddy-current test. Testing shall follow the procedures of Practice E 243. The pipe shall be passed through an eddy-current testing unit adjusted to provide information on the suitability of the material for the intended application.

13.2.1 Notch depth standards rounded to the nearest 0.001 in. shall be 22% of the nominal wall thickness. The notch depth tolerances shall be ±0.0005 in.

13.2.1.1 Pipe that does not actuate the signaling device of the eddy-current tester shall be considered as conforming to the requirements of this test. Pipe with discontinuities indicated by the testing unit may be reexamined or retested, at the option of the manufacturer, to determine whether the discontinuity is cause for rejection. Signals that are found to have been caused by minor mechanical damage, soil, or moisture, shall not be cause for rejection of the pipe, provided the dimensions are still within prescribed limits and the pipe is suitable for its intended application.

13.3 *Other Nondestructive Tests* — The material shall be tested in the final size, and unless otherwise agreed upon by the manufacturer or supplier and purchaser, it may be tested prior to the final anneal or heat treatment when these heat treatments are required. By agreement between the manufacturer or supplier and purchaser, testing of the material by one of the methods in 13.3.1 and 13.3.2 may be required.

13.3.1 *Hydrostatic Test* — Each length of pipe shall withstand, without showing weakness or defects, an internal hydrostatic pressure sufficient to subject the material to a fiber stress of 7000 psi, determined by the following equation for thin hollow cylinders under tension. The pipe need not be tested at a hydrostatic pressure of over 1000 psig, unless so specified.

$$P = 2St/(D - 0.8t)$$

where:

P = hydrostatic pressure, psig,

TABLE 5
AVERAGE OUTSIDE DIAMETER[A] TOLERANCES

Specified Diameter, in.	Tolerances, plus and minus,[B] in. for Pipe of Alloys UNS Nos. 70600, C71500
Over 2 to 3 incl	0.005
Over 3 to 4 incl	0.006
Over 4 to 5 incl	0.008
Over 5 to 6 incl	0.009
Over 6 to 8 incl	0.010
Over 8 to 10 incl	0.13
Over 10 to 12 incl	0.015
Over 12	0.5%

[A] The average outside diameter of a pipe is the average of the maximum and minimum outside diameters, as determined at any one cross section.

[B] If tolerances all plus or all minus are desired, double the values given.

t = wall thickness of the pipe, in.,
D = outside diameter of the pipe, in., and
S = allowable stress of the material.

13.3.2 *Pneumatic Test* — When specified, the pipe shall be subjected to an internal air pressure of 60 psig minimum for 5 s without showing evidence of leakage. The test method used shall permit easy visual detection of any leakage, such as by having the pipe under water or by the pressure-differential method. Any evidence of leakage shall be cause for rejection.

14. Dimensions and Permissible Variations

14.1 For purposes of determining conformance with the dimensional requirements prescribed in this specification, any measured value outside the specified limiting values for any dimension may be cause for rejection.

NOTE 1 — Blank spaces in the tolerance tables indicate that the material is not generally available or that no tolerance has been established (see Appendix X1).

14.2 *Outside Diameter Tolerances:*

14.2.1 The outside diameter for round pipe furnished "as welded," "as-welded and drawn," and "as-welded fully finished" shall conform to the tolerances in Table 5 except as noted in 14.2.2.

14.2.2 These outside diameter tolerances shall not apply to the "as-welded" pipe when measured across that portion which contains the weld zone.

14.3 *Wall Thickness Tolerances:*

14.3.1 The wall thickness of pipe furnished in drawn tempers or as fully finished shall conform to the tolerances shown in Table 6, except as noted in 14.3.2 and 14.3.3

14.3.2 The tolerances of Table 6 shall not apply to that portion of the "as-welded" wall which contains the weld flash or bead.

14.3.3 The tolerances of Table 6 shall be increased by 100% for that portion of the "as-welded" wall which contains the weld zone.

14.4 *Lengths and Tolerances:*

14.4.1 Pipe in straight lengths shall be furnished in stock lengths with ends included unless the order requires specific lengths or specific lengths with ends.

14.4.2 The tolerances for pipe furnished in straight lengths shall be as shown in Table 7.

14.4.3 The schedule for pipe furnished with specific or stock lengths with ends shall be in accordance with Table 8.

14.5 *Squareness of Cut* — The departure from squareness of the end of any pipe shall not exceed 0.016 in./in. of diameter.

14.6 *Roundness* — The differences between the major and minor diameter of pipe as determined at any one cross section shall not exceed 3% of the nominal outside diameter.

15. Workmanship, Finish, and Appearance

15.1 The pipe shall be free of defects of a nature that interferes with normal commercial applications. It shall be well cleaned and free of dirt.

16. Test Methods

16.1 The properties enumerated in this specification shall, in case of disagreement, be determined in accordance with the following applicable methods of the American Society for Testing and Materials:

Test	ASTM Designation
Chemical analysis	E 75
Tension test	E 8

16.2 Tension test specimens shall be of the full section of the pipe and shall conform to the requirements of Section 4 of Methods E 8, unless the limitations of the testing machine preclude the use of such a specimen. Test specimens conforming to Type No. 1 of Fig. 13 of Methods E 8 may be used when a full-section specimen cannot be tested.

16.3 Whenever tension test results are obtained from both full-size and from machined test specimens and they

TABLE 6
WALL THICKNESS TOLERANCES, IN.

	Outside Diameter, in.					
	Up to 2½ incl	Over 2½ to 4½ incl	Over 4½ to 6½ incl	Over 6½ to 9 incl	Over 9 to 11½ incl	Over 11½
To 0.017 incl.	0.0013	...	...	...	...	...
Over 0.017 to 0.021 incl	0.0015	...	...	...	...	...
Over 0.021 to 0.026 incl	0.002	...	...	...	...	...
Over 0.026 to 0.037 incl	0.0025	0.003	...	...	...	...
Over 0.037 to 0.050 incl	0.003	0.0035	0.0035	...	...	...
Over 0.050 to 0.073 incl	0.0035	0.004	0.004	0.007	...	...
Over 0.073 to 0.130 incl	0.004	0.0045	0.0045	0.008	...	...
Over 0.130 to 0.205 incl	0.0045	0.005	0.005	0.010	0.012	0.014
Over 0.205 to 0.300 incl	0.005	0.006	0.006	0.012	0.014	0.018
Over 0.300 to 0.500 and over	0.006	0.007	0.007	0.019	0.017	0.023

NOTE — *Maximum deviation at any point:* The above tolerances are plus and minus; if tolerances all plus or all minus are desired, double the values given.

TABLE 7
LENGTH TOLERANCES FOR PIPE FURNISHED IN STRAIGHT LENGTHS

Length	Tolerances, in. Applicable Only to Full-Length Pieces
Specific Lengths:	
Up to 6 in. incl	1/16
Over 6 in. to 2 ft incl	3/32
Over 2 to 6 ft incl	1/8
Over 6 to 14 ft incl	1/4
Over 14 ft	1/2
Specific lengths with ends	1
Stock lengths with or without ends	1[A]

[A] As stock lengths are cut and placed in stock in advance of orders, departure from this tolerance is not practicable.

TABLE 8
SCHEDULE OF SPECIFIC AND STOCK LENGTHS WITH ENDS INCLUDED

Major Outside Dimensions, in.	Nominal Length, ft	Shortest Permissible Length,[A] percent of Nominal Length	Maximum Permissible Weight of Ends, percent of Lot Weight
Up to 3 incl	6 to 20 incl	55	30
Over 3 to 3½ incl	6 to 20 incl	50	40

[A] Expressed to the nearest ½ ft.

differ, the results obtained from full-size test specimens shall be used to determine conformance to the specification requirements.

16.4 Tension test results on material covered by this specification are not seriously affected by variations in speed of testing. A considerable range of testing speed is permissible; however, the rate of stressing to the yield strength should not exceed 100 ksi/min. Above the yield strength the movement per minute of the testing machine head under load should not exceed 0.5 in./in. of gage length (or distance between grips for full-section specimens).

17. Significance of Numerical Limits

17.1 For purpose of determining compliance with the specified limits for requirements of the properties listed in the following table, an observed value or a calculated value shall be rounded as indicated in accordance with the rounding method of Recommended Practice E 29.

Property	Rounded Unit for Observed or Calculated Value
Chemical composition	Nearest unit in the last right-hand place of figures of the specified limit
Tensile strength, yield strength	Nearest 1%
Elongation	Nearest 1%

18. Rejection and Rehearing

18.1 Material that fails to conform to the requirements of this specification may be rejected. Rejection should be reported to the manufacturer or supplier promptly and in writing. In case of dissatisfaction with the results of the test, the manufacturer or supplier may make claim for a rehearing.

19. Packaging and Package Marking

19.1 The material shall be separated by size, composition, and temper, and prepared for shipment in such a manner as to ensure acceptance by common carrier for transportation and to afford protection from the normal hazards of transportation.

19.2 Each shipping unit shall be legibly marked with the purchase order number, metal or alloy designation, temper, size, shape, total length or piece count, or both, and name of supplier. The specification number shall be shown, when specified.

20. Certification

20.1 The manufacturer shall furnish to the purchaser a certificate stating that each lot has been sampled, tested, and inspected in accordance with this specification and has met the requirements.

21. Mill Test Report

21.1 When specified on the purchase order, the manufacturer shall furnish to the purchaser a test report showing results of tests required by the specification.

APPENDIX

(Nonmandatory Information)

X1. SUGGESTED SIZES FOR PIPE

X1.1 Suggested wall thickness for welded copper-nickel alloy pipe are given in Table X1.1.

TABLE X1.1
SUGGESTED WALL THICKNESSES OF WELDED PIPE BASED ON SPS DIAMETERS

		Wall Thickness, in.		
SPS, in.	Outside Diameter, in.	A	B	C
2.5	2.875	...	0.083	0.134
3	3.500	...	0.095	0.165
3.5	4.000	...	0.095	0.180
4	4.500	...	0.109	0.203
4.5	5.000	...	0.120	0.203
5	5.563	...	0.125	0.220
6	6.625	...	0.134	0.259
7	7.625	...	0.134	0.284
8	8.625	...	0.148	0.340
9	9.625	...	0.187	0.340
10	10.750	0.134	0.187	0.380
12	12.750	0.156	0.250	0.454
14	14.0	0.165	...	...
16	16.0	0.165	...	...
18	18.0	0.180	...	...
20	20.0	0.180	...	...
24	24.0	0.180	...	...
30	30.0	0.250	...	...

SPECIFICATION FOR WELDED UNS N08020, N08024, AND N08026 ALLOY TUBES

SB-468

(Identical with ASTM Specification B 468-99 except that certification has been made mandatory.)

1. Scope

1.1 This specification covers welded UNS N08020, N08024, and N08026 alloy boiler, heat exchanger, and condenser tubes for general corrosion-resisting and low- or high-temperature service.

1.2 This specification covers tubes $\frac{1}{8}$ to 5 in. (3.18 to 127 mm), inclusive, in outside diameter and 0.015 to 0.500 in. (0.38 to 12.70 mm), inclusive, in wall thickness. Table 2 of Specification B 751 lists the dimensional requirements of these sizes. Tubes having other dimensions may be furnished provided such tubing complies with all other requirements of this specification.

1.3 The values stated in inch-pound units are to be regarded as the standard. The values given in parentheses are for information only.

2. Referenced Documents

2.1 *ASTM Standards:*

A 262 Practices for Detecting Susceptibility to Intergranular Attack in Austenitic Stainless Steels

B 751 Specification for General Requirements for Nickel and Nickel-Alloy Welded Tube

E 8 Test Methods for Tension Testing of Metallic Materials

3. General Requirement

3.1 Material furnished in accordance with this specification shall conform to the applicable requirements of the current edition of Specification B 751 unless otherwise provided herein.

4. Ordering Information

4.1 It is the responsibility of the purchaser to specify all requirements that are necessary for the safe and satisfactory performance of material ordered under this specification. Examples of such requirements include, but are not limited to, the following:

4.1.1 Quantity (feet or number of lengths),

4.1.2 UNS number,

4.1.3 Size (outside diameter and minimum or average wall thickness),

4.1.4 Length (random or specific),

4.1.5 ASTM designation,

4.1.6 *Product Analysis* — State if required,

4.1.7 *Certification* — Certification and a report of test results are required,

4.1.8 *Purchaser Inspection* — State which tests or inspections are to be witnessed, if any, and

4.1.9 Supplementary requirements, if any.

5. Materials and Manufacture

5.1 The tubing shall be made from flat-rolled stock by an automatic welding process with no addition of filler metal. Subsequent to welding and prior to final heat treatment, the material shall be cold-worked in either the weld metal only, or in both the weld and base metal.

5.2 *Heat Treatment* — Tubing of UNS N08020 alloy shall be furnished in the stabilized-annealed condition. Tubing of UNS N08024 alloy shall be furnished in the annealed condition. Tubing of UNS N08026 alloy shall be furnished in the solution-annealed condition.

NOTE 1 — The recommended annealing temperatures are 1800 to 1850°F (982 to 1010°C) for UNS N08020, 1925 to 1975°F (1052 to

TABLE 1
CHEMICAL REQUIREMENTS

Element	Composition, %		
	UNS N08020	UNS N08024	UNS N08026
Carbon, max	0.07	0.03	0.03
Manganese, max	2.00	1.00	1.00
Phosphorus, max	0.045	0.035	0.03
Sulfur, max	0.035	0.035	0.03
Silicon, max	1.00	0.50	0.50
Nickel	32.00–38.00	35.00–40.00	33.00–37.20
Chromium	19.00–21.00	22.50–25.00	22.00–26.00
Molybdenum	2.00–3.00	3.50–5.00	5.00–6.70
Copper	3.00–4.00	0.50–1.50	2.00–4.00
Columbium (Nb) + tantalum	8× carbon–1.00	0.15–0.35	
Nitrogen	. . .	. . .	0.10–0.16
Iron[A]	Remainder	Remainder	Remainder

[A] By difference.

TABLE 2
MECHANICAL PROPERTY REQUIREMENTS

Tensile Strength, min, ksi (MPa)	Yield Strength,[A] min, ksi (MPa)	Elongation in 2 in. (50.8 mm), min, %
80 (551)	35 (241)	30.0

[A] Yield strength shall be determined by the offset method at 0.2% limiting permanent set in accordance with Test Methods E 8. An alternative method of determining yield strength may be based on total extension under load of 0.5%.

1079°C) for UNS N08024, and 2050 to 2200°F (1121 to 1204°C) for UNS N08026.

6. Chemical Composition

6.1 The material shall conform to the composition limits specified in Table 1. One test is required for each lot as defined in Specification B 751.

6.2 If a product analysis is performed, it shall meet the chemistry limits prescribed in Table 1, subject to the analysis tolerances specified in Table 6 of Specification B 751.

7. Mechanical Properties and Other Requirements

7.1 *Mechanical Properties* — The material shall conform to the mechanical property requirements specified in Table 2. One test is required for each lot as defined in Specification B 751.

7.2 *Flattening Test* — A flattening test shall be made on each end of one tube per lot. Superficial ruptures resulting from surface imperfections shall not be cause for rejection.

7.3 *Flange Test* — A flange test shall be made on each end of one tube per lot.

7.4 *Nondestructive Test Requirements* — Each tube shall be subjected to either a pressure test or a nondestructive electric test at the manufacturer's option. The purchaser may specify which test is to be used.

SUPPLEMENTARY REQUIREMENTS

The following supplementary requirements shall be applied only when specified by the purchaser in the inquiry, contract, or order:

S1. Corrosion Tests

S1.1 One intergranular corrosion test per lot shall be performed by the manufacturer on a sensitized specimen and tested in accordance with Practices A 262. When this supplementary requirement is specified, the specific practice (Practice B or Practice E) shall also be specified. If Practice B is specified, the specimen must pass with a rate of less than 0.002 in. (0.05 mm) per month. A lot for intergranular corrosion testing shall be the same as for mechanical testing.

S1.1.1 In addition to the anneal recommended in Note 1, the specimen shall be sensitized for 1 h at 1250°F (677°C) before being subjected to corrosion testing.

S1.1.2 If any corrosion test specimen fails the test, the material represented by such specimens may be reheat-treated and resubmitted for test.

SPECIFICATION FOR UNS N08020, UNS N08026, AND UNS N08024 NICKEL ALLOY BAR AND WIRE

SB-473

(Identical with ASTM Specification B 473-95.)

1. Scope

1.1 This specification covers UNS N08020, UNS N08026, and UNS N08024 bar and wire other than required for reforging.

1.2 The values stated in inch-pound units are to be regarded as the standard. The values given in parentheses are for information only.

2. Referenced Documents

2.1 *ASTM Standards:*

A 262 Practices for Detecting Susceptibility to Intergranular Attack in Austenitic Stainless Steels

E 8 Test Methods for Tension Testing of Metallic Materials

E 38 Methods for Chemical Analysis of Nickel-Chromium and Nickel-Chromium-Iron Alloys

E 353 Test Methods for Chemical Analysis of Stainless, Heat-Resisting, Maraging, and Other Similar Chromium-Nickel-Iron Alloys

3. Terminology

3.1 *Descriptions of Terms Specific to This Standard:*

3.1.1 The terms bar and wire as used in this specification are described as follows:

3.1.1.1 *bars* — hot-finished rounds, squares, octagons, and hexagons: $\frac{1}{4}$ in. (6.35 mm) and over in diameter or size. Hot-finished flats: $\frac{1}{4}$ to 10 in. (254 mm), inclusive, in width, $\frac{1}{8}$ in. (3.175 mm) and over in thickness. Cold-finished rounds, squares, octagons, hexagons, and shapes: over $\frac{1}{2}$ in. (12.7 mm) in diameter or size. Cold-finished flats: $\frac{3}{8}$ in. (9.525 mm) and over in width [see Discussion (1)], $\frac{1}{8}$ in. and over in thickness [see Discussion (2)].

(1) Discussion — Widths less than $\frac{3}{8}$ in. (9.525 mm) and thicknesses less than $\frac{3}{16}$ in. (4.75 mm) are generally described as flat wire.

(2) Discussion — Thicknesses $\frac{1}{8}$ in. (3.175 mm) to under $\frac{3}{16}$ in. (4.75 mm) can be cold-rolled strip as well as bar.

3.1.1.2 *wire* — cold finished only: round, square, octagon, hexagon, and shape wire, $\frac{1}{2}$ in. (12.7 mm) and under in diameter or size. Cold-finished only: flat wire, $\frac{3}{16}$ in. (4.76 mm) to under $\frac{3}{8}$ in. (9.525 mm) in width, 0.010 in. (0.254 mm) to under $\frac{3}{16}$ in. in thickness.

4. Ordering Information

4.1 Orders for material under this specification shall include the following information:

4.1.1 Quantity (weight or number of pieces),

4.1.2 Name of material or UNS number,

4.1.3 Form (bar or wire),

4.1.4 Dimensions,

4.1.5 Condition,

4.1.6 Finish,

4.1.7 ASTM designation and year of issue,

4.1.8 Inspection (15.1),

4.1.9 Supplementary requirements, if any, and

4.1.10 If possible, the intended end use.

NOTE 1 — A typical ordering description is as follows: 200 bars, UNS N08020, 1 in. (25.4 mm) round by 10 to 14 ft (3.0 to 3.6 m), centerless ground, ASTM Specification B 473.

5. Materials and Manufacture

5.1 *Heat Treatment* — The product of UNS N08020 alloy shall be furnished in the stabilized-annealed condition. The product of UNS N08026 alloy shall be furnished

TABLE 1
CHEMICAL REQUIREMENTS

Element	Composition, %		
	UNS N08026	UNS N08020	UNS N08024
Carbon, max	0.03	0.07	0.03
Manganese, max	1.00	2.00	1.00
Phosphorus, max	0.03	0.045	0.035
Sulfur, max	0.03	0.035	0.035
Silicon, max	0.50	1.00	0.50
Nickel	33.00–37.20	32.00–38.00	35.00–40.00
Chromium	22.00–26.00	19.00–21.00	22.50–25.00
Molybdenum	5.00–6.70	2.00–3.00	3.50–5.00
Copper	2.00–4.00	3.00–4.00	0.50–1.50
Columbium (Nb) + tantalum	...	8 × carbon–1.00	0.15–0.35
Nitrogen	0.10–0.16	...	...
Iron	remainder[A]	remainder[A]	remainder[A]

[A] By difference.

TABLE 2
PRODUCT ANALYSIS TOLERANCES

Elements	Tolerances Over the Maximum Limit or Under the Minimum Limit		
	UNS N08026	UNS N08020	UNS N08024
Carbon	0.005	0.01	0.005
Manganese	0.03	0.04	0.03
Phosphorus	0.005	0.005	0.005
Sulfur	0.005	0.005	0.005
Silicon	0.05	0.05	0.05
Chromium	0.25	0.25	0.25
Nickel	0.30	0.30	0.30
Molybdenum	0.10	0.10	0.10
Columbium (Nb) + tantalum	...	0.05	0.05
Copper	0.10	0.10	0.10
Nitrogen	0.01	...	...

in the solution-annealed condition. The product of UNS N08024 alloy shall be furnished in the annealed condition.

NOTE 2 — The recommended annealing temperatures all followed by quenching in water or rapidly cooling by other means are as follows: 1700 to 1850°F (927 to 1010°C) for UNS N08020, 2050 to 2200°F (1121 to 1204°C) for UNS N08026, and 1925 to 1975°F (1052 to 1079°C) for UNS N08024.

6. Chemical Composition

6.1 The material shall conform to the requirements as to chemical composition prescribed in Table 1.

6.2 If a product (check) analysis is performed by the purchaser, the material shall conform to the product (check) analysis variations prescribed in Table 2.

7. Condition

7.1 Bars shall be furnished annealed and either hot finished or cold finished. Strain-hardened material is available only as cold finished.

7.2 Wire will be furnished only as annealed and cold finished.

8. Mechanical Properties

8.1 The material shall conform to the applicable requirements as to mechanical properties prescribed in Table 3.

TABLE 3
MECHANICAL PROPERTY REQUIREMENTS[A]

Condition	Diameter or Thickness, in. (mm)	Tensile Strength, min ksi	Tensile Strength, min MPa	Yield Strength, min ksi	Yield Strength, min MPa	Elongation in 2 in. (50.8 mm), min, %	Reduction of area, min, %
Annealed, hot finished or cold finished	All	80	551	35	241	30.0[B]	50.0
Annealed, strain-hardened	Up to 2 (50.8) incl	90	620	60	415	15.0	40.0

[A] For wire only, tensile strength 90 to 120.0 ksi (620 to 830 MPa); no requirements on yield strength, elongation, and reduction of area.
[B] Cold-finished shapes require only 15%, minimum, elongation.

TABLE 4
PERMISSIBLE VARIATIONS IN SIZE OF HOT-ROLLED ROUND AND SQUARE BARS

	Permissible Variations from Specified Size, in. (mm) Over	Permissible Variations from Specified Size, in. (mm) Under	Out-of-Round[A] or Out-of-Square,[B] in. (mm)
1/4 (6.35) to 5/16 (7.94), incl[C,D]	E	E	E
Over 5/16 (7.94) to 7/16 (11.11), incl[C,D]	0.006 (0.15)	0.006 (0.15)	0.009 (0.23)
Over 7/16 (11.11) to 5/8 (15.88), incl[C,D]	0.007 (0.18)	0.007 (0.18)	0.010 (0.25)
Over 5/8 (15.88) to 7/8 (22.22), incl	0.008 (0.20)	0.008 (0.20)	0.012 (0.30)
Over 7/8 (22.22) to 1 (25.40), incl	0.009 (0.23)	0.009 (0.23)	0.013 (0.33)
Over 1 (25.40) to 1 1/8 (28.58), incl	0.010 (0.25)	0.010 (0.25)	0.015 (0.38)
Over 1 1/8 (28.58) to 1 1/4 (31.75), incl	0.011 (0.28)	0.011 (0.28)	0.016 (0.41)
Over 1 1/4 (31.75) to 1 3/8 (34.92), incl	0.012 (0.30)	0.012 (0.30)	0.018 (0.46)
Over 1 3/8 (34.92) to 1 1/2 (38.10), incl	0.014 (0.36)	0.014 (0.36)	0.021 (0.53)
Over 1 1/2 (38.10) to 2 (50.80), incl	1/64 (0.40)	1/64 (0.40)	0.023 (0.58)
Over 2 (50.80) to 2 1/2 (63.50), incl	1/32 (0.79)	0	0.023 (0.58)
Over 2 1/2 (63.50) to 3 1/2 (88.90), incl	3/64 (1.19)	0	0.035 (0.89)
Over 3 1/2 (88.90) to 4 1/2 (114.30), incl	1/16 (1.59)	0	0.046 (1.17)
† Over 4 1/2 (114.30) to 5 1/2 (139.70), incl	5/64 (1.98)	0	0.058 (1.47)
Over 5 1/2 (139.70) to 6 1/2 (165.10), incl	1/8 (3.18)	0	0.070 (1.78)
Over 6 1/2 (165.10) to 8 (203.20), incl	5/32 (3.97)	0	0.085 (2.18)

[A] Out-of-round is the difference between the maximum and minimum diameters of the bar, measured at the same cross section.
[B] Out-of-square section is the difference in the two dimensions at the same cross section of a square bar, each dimension being the distance between opposite faces.
[C] Size tolerances have not been evolved for rounds in the size range of 1/4 to 5/16 in. (6.35 to 7.94 mm), inclusive. Size tolerances have not been evolved for round sections in the size range of 1/4 in. to approximately 5/8 in. (6.35 to 15.88 mm) in diameter which are produced on rod mills in coils.
[D] Variations in size of coiled product made on rod mills are greater than size tolerances for product made on bar mills.
[E] Squares in this size are not produced as hot-rolled products.
† Editorially corrected.

9. Dimensions and Permissible Variations

9.1 *Bar* — Bars shall conform to the variations in dimensions prescribed in Tables 4 to 12, inclusive, as applicable.

9.2 *Wire* — Wire shall conform to the permissible variations in dimensions prescribed in Tables 13 to 17, inclusive, as applicable.

10. Workmanship, Finish, and Appearance

10.1 The product shall be uniform in quality and condition, smooth, commercially straight or flat, and free of injurious imperfections.

11. Sampling

11.1 *Lot:*

11.1.1 A lot for chemical analysis shall consist of one heat.

11.1.2 A lot for mechanical properties shall consist of all material from the same heat, nominal diameter or thickness, of each heat-treatment charge.

11.2 *Test Material Selection:*

11.2.1 *Chemical Analysis* — Representative samples shall be taken during pouring or subsequent processing.

TABLE 5
PERMISSIBLE VARIATIONS IN SIZE OF HOT-ROLLED HEXAGONAL AND OCTAGONAL BARS

Specified Sizes Measured Between Opposite Sides, in. (mm)	Permissible Variations from Specified Size, in. (mm)		Maximum Difference in 3 Measurements for Hexagons only, in. (mm)
	Over	Under	
1/4 (6.35) to 1/2 (12.70), incl	0.007 (0.18)	0.007 (0.18)	0.011 (0.28)
Over 1/2 (12.70) to 1 (25.40), incl	0.010 (0.25)	0.010 (0.25)	0.015 (0.38)
Over 1 (25.40) to 1 1/2 (38.10), incl	0.021 (0.53)	0.021 (0.53)	0.025 (0.64)
Over 1 1/2 (38.10) to 2 (50.80), incl	1/32 (0.79)	1/32 (0.79)	1/32 (0.79)
Over 2 (50.80) to 2 1/2 (63.50), incl	3/64 (1.19)	3/64 (1.19)	3/64 (1.19)
Over 2 1/2 (63.50) to 3 1/2 (88.90), incl	1/16 (1.59)	1/16 (1.59)	1/16 (1.59)

TABLE 6
PERMISSIBLE VARIATIONS IN THICKNESS AND WIDTH FOR HOT-ROLLED FLAT BARS

Specified Width, in. (mm)	Permissible Variations in Thickness for Thicknesses Given, in. (mm)					
	1/8 (3.18) to 1/2 (12.70), incl		Over 1/2 (12.70) to 1 (25.40), incl		Over 1 (25.40) to 2 (50.80), incl	
	Over	Under	Over	Under	Over	Under
To 1 (25.40), incl	0.008 (0.20)	0.008 (0.20)	0.010 (0.25)	0.010 (0.25)	...	...
Over 1 (25.40) to 2 (50.80), incl	0.012 (0.30)	0.012 (0.30)	0.015 (0.38)	0.015 (0.38)	0.031 (0.79)	0.031 (0.79)
Over 2 (50.80) to 4 (101.60), incl	0.015 (0.38)	0.015 (0.38)	0.020 (0.51)	0.020 (0.51)	0.031 (0.79)	0.031 (0.79)
Over 4 (101.60) to 6 (152.40), incl	0.015 (0.38)	0.015 (0.38)	0.020 (0.51)	0.020 (0.51)	0.031 (0.79)	0.031 (0.79)
Over 6 (152.40) to 8 (203.20), incl	0.016 (0.41)	0.016 (0.41)	0.025 (0.64)	0.025 (0.64)	0.031 (0.79)	0.031 (0.79)
Over 8 (203.20) to 10 (254.00), incl	0.021 (0.53)	0.021 (0.53)	0.031 (0.79)	0.031 (0.79)	0.031 (0.79)	0.031 (0.79)

Specified Width, in. (mm)	Over 2 (50.80) to 4 (101.60), incl		Over 4 (101.60) to 6 (152.40), incl		Over 6 (152.40) to 8 (203.20), incl	
	Over	Under	Over	Under	Over	Under
To 1 (25.40), incl	...	...	...	...	...	...
Over 1 (25.40) to 2 (50.80), incl	...	...	...	...	...	...
Over 2 (50.80) to 4 (101.60), incl	0.062 (1.57)	0.031 (0.79)	...	...	...	...
Over 4 (101.60) to 6 (152.40), incl	0.062 (1.57)	0.031 (0.79)	0.093 (2.36)	0.062 (1.57)	...	...
Over 6 (152.40) to 8 (203.20), incl	0.062 (1.57)	0.031 (0.79)	0.093 (2.36)	0.062 (1.57)	0.125 (3.18)	0.156 (3.96)
Over 8 (203.20) to 10 (154.00), incl	0.062 (1.57)	0.031 (0.79)	0.093 (2.36)	0.062 (1.57)	0.125 (3.18)	0.156 (3.96)

Specified Width, in. (mm)	Permissible Variations in Width, in. (mm)	
	Over	Under
To 1 (25.40), incl	0.015 (0.38)	0.015 (0.38)
Over 1 (25.40) to 2 (50.80), incl	0.031 (0.79)	0.031 (0.79)
Over 2 (50.80) to 4 (101.60), incl	0.062 (1.57)	0.031 (0.79)
Over 4 (101.60) to 6 (152.40), incl	0.093 (2.36)	0.062 (1.57)
Over 6 (152.40) to 8 (203.20), incl	0.125 (3.18)	0.156 (3.96)
Over 8 (203.20) to 10 (254.00), incl	0.156 (3.96)	0.187 (4.75)

TABLE 7
PERMISSIBLE VARIATIONS IN SIZE OF COLD-FINISHED ROUND BARS

Specified Size, in. (mm)	Permissible Variations from Specified Size, in. (mm)[A,B] Over	Under
Over ½ (12.70) to 1 (25.40), excl	0.002 (0.05)	0.002 (0.05)
1 (25.40) to 1½ (38.10), excl	0.0025 (0.06)	0.0025 (0.06)
1½ (38.10) to 4 (101.60), incl[C]	0.003 (0.08)	0.003 (0.08)

[A] Unless otherwise specified, size tolerances are over and under as shown in the above table. When required, however, they may be specified all over and nothing under, or all under and nothing over, or any combination of over and under, if the total spread in size tolerance for a specified size is not less than the total spread shown in the table.

[B] When it is necessary to heat treat or heat treat and pickle after cold finishing, size tolerances are double those shown in the table.

[C] Cold-finished bars over 4 in. (101.60 mm) in diameter are produced; size tolerances for such bars have not been evolved.

TABLE 8
PERMISSIBLE VARIATIONS IN SIZE OF COLD-FINISHED HEXAGONAL, OCTAGONAL, AND SQUARE BARS

Specified Size, in. (mm)	Permissible Variations from Specified Size, in. (mm)[A] Over	Under
Over ½ (12.70) to 1 (25.40), incl	0	0.004 (0.10)
Over 1 (25.40) to 2 (50.80), incl	0	0.006 (0.15)
Over 2 (50.80) to 3 (76.20), incl	0	0.008 (0.20)
Over 3 (76.20)	0	0.010 (0.25)

[A] When it is necessary to heat treat or heat treat and pickle after cold finishing, size tolerances are double those shown in the table.

11.2.1.1 *Check analysis* shall be wholly the responsibility of the purchaser.

11.2.2 *Mechanical Properties* — Samples of the material to provide test specimens shall be taken from such locations in each lot as to be representative of that lot.

12. Number of Tests

12.1 *Chemical Analysis* — One test per lot.

12.2 *Mechanical Properties* — One test per lot.

13. Specimen Preparation

13.1 Tension test specimens shall be taken from the material after final heat treatment, and shall be selected in the longitudinal direction. The tension test specimens shall conform to the appropriate sections of Test Methods E 8.

14. Test Methods

14.1 The chemical composition and mechanical properties of the material as enumerated in this specification shall, in case of disagreement, be determined in accordance with the following methods:

Test	ASTM Designation
Chemical analysis	E 38, E 353[A,B]
Tension	E 8

[A] Iron shall be determined arithmetically by difference.

[B] Methods E 38 are to be used only for elements not covered by Test Methods E 353.

15. Inspection

15.1 If specified, source inspection of the material by the purchaser at the manufacturer's plant shall be made as agreed upon between the purchaser and the manufacturer as part of the purchase contract.

16. Rejection and Rehearing

16.1 Material that fails to conform to the requirements of this specification may be rejected. Rejection should be reported to the producer or supplier promptly and in writing. In case of dissatisfaction with the results of the test, the producer or supplier may make claim for a rehearing.

17. Certification

17.1 When specified in the purchase order or contract, a producer's or supplier's certification shall be furnished to the purchaser that the material was manufactured, sampled, tested, and inspected in accordance with this specification and has been found to meet the requirements.

TABLE 9
PERMISSIBLE VARIATIONS IN WIDTH AND THICKNESS OF COLD-FINISHED FLAT BARS

Width, in. (mm)	Permissible Variations in Width, over and under, in. (mm)[A] For Thicknesses 1/4 (6.35) and Under	For Thicknesses Over 1/4 (6.35)
3/8 (9.52) to 1 (25.40), incl	0.004 (0.10)	0.002 (0.05)
Over 1 (25.40) to 2 (50.80), incl	0.006 (0.15)	0.003 (0.08)
Over 2 (50.80) to 3 (76.20), incl	0.008 (0.20)	0.004 (0.10)
Over 3 (76.20) to 4 1/2 (114.30), incl	0.010 (0.25)	0.005 (0.13)

Thickness, in. (mm)	Permissible Variations in Thickness, over and under, in. (mm)[A]
1/8 (3.18) to 1 (25.40), incl	0.002 (0.05)
Over 1 (25.40) to 2 (50.80), incl	0.003 (0.08)
Over 2 (50.80) to 3 (76.20), incl	0.004 (0.10)
Over 3 (76.20) to 4 1/2 (114.30), incl[B]	0.005 (0.13)

[A] When it is necessary to heat treat and pickle after cold finishing, size tolerances are double those shown in the table.

[B] Cold-finished flat bars over 4 1/2 in. (114.30 mm) wide or thick are produced; width and thickness tolerances for such bars have not been evolved.

TABLE 10
PERMISSIBLE VARIATIONS IN LENGTH OF HOT-FINISHED OR COLD-FINISHED BARS

Specified Size of Rounds, Squares, Hexagons, and Octagons and Widths of Flats,[A] in. (mm)	Permissible Variations in Length, in. (mm) For Lengths Up to 12 ft (3,658 mm), incl		For Lengths Over 12 (3,658 mm) to 25 ft (7,620 mm), incl	
	Over	Under	Over	Under
To 2 (50.80), incl	1/2 (12.70)	0	3/4 (19.05)	0
Over 2 (50.80) to 4 (101.60), incl	3/4 (19.05)	0	1 (25.40)	0
Over 4 (101.60) to 6 (152.40), incl	1 (25.40)	0	1 1/4 (31.75)	0
Over 6 (152.40) to 9 (228.60), incl	1 1/4 (31.75)	0	1 1/2 (38.10)	0
Over 9 (228.60) to 12 (304.80), incl	1 1/2 (38.10)	0	2 (50.80)	0

NOTE — The order should specify random lengths or specific lengths. When random lengths are ordered, the length tolerance is not less than 24 in. (609.60 mm). When specific lengths are ordered, Table 10 or Table 11 shall apply.

[A] The maximum width of bar flats is 10 in. (254.00 mm).

When specified in the purchase order or contract, a report of the test results shall be furnished.

18. Product Marking

18.1 Each bundle or box shall be properly tagged with metal tags showing heat number, grade, condition, specification number and size to assure proper identification.

19. Packaging and Package Marking

19.1 Bars or wire shall be bundled or boxed in such a manner as to assure safe delivery to their destination when properly transported by any common carrier.

TABLE 11
PERMISSIBLE VARIATIONS IN LENGTH OF HOT-FINISHED OR COLD-FINISHED BARS MACHINE CUT AFTER MACHINE STRAIGHTENING

Specified Size of Rounds, Squares, Hexagons, and Octagons and Widths of Flats,[A] in. (mm)	For Lengths Up to 12 ft (3,658 mm), incl		For Lengths Over 12 (3,658 mm) to 25 ft (7,620 mm), incl	
	Over	Under	Over	Under
To 3 (76.20), incl	1/8 (3.18)	0	3/16 (4.76)	0
Over 3 (76.20) to 6 (152.40), incl	3/16 (4.76)	0	1/4 (6.35)	0
Over 6 (152.40) to 9 (228.60), incl	1/4 (6.35)	0	5/16 (7.94)	0
Over 9 (228.60) to 12 (304.80), incl	1/2 (12.70)	0	1/2 (12.70)	0

NOTE — The order should specify random lengths or specific lengths. When random lengths are ordered, the length tolerance is not less than 24 in. (609.60 mm). When specific lengths are ordered, Table 10 or Table 11 shall apply.

[A] The maximum width of bar flats is 10 in. (254.00 mm).

TABLE 12
PERMISSIBLE VARIATIONS IN STRAIGHTNESS OF MACHINE STRAIGHTENED HOT-FINISHED OR COLD-FINISHED BARS

Measurement is taken on the concave side of the bar with a straight edge.

Unless otherwise specified, hot-finished or cold-finished bars for machining purposes are furnished machine straightened to the following tolerances:

Hot finished:

1/8 in. (3.18 mm) in any 5 ft (1524 mm), but may not exceed 1/8 in. (3.18 mm) × [length in feet (mm)]/[5 ft (1524 mm)]

Cold finished:

1/16 in. (1.59 mm) in any 5 ft (1524 mm), but may not exceed 1/16 in. (1.59 mm) × [length in feet (mm)]/[5 ft (1524 mm)]

TABLE 13
DIAMETER AND OUT-OF-ROUND TOLERANCES FOR ROUND WIRE (DRAWN, POLISHED, CENTERLESS GROUND, CENTERLESS GROUND AND POLISHED)[A,B,C]

Specified Diameter, in. (mm)	Diameter Tolerance, in. (mm)	
	Over	Under
0.5000 (12.70)	0.002 (0.05)	0.002 (0.05)
Under 0.5000 (12.70) to 0.3125 (7.94), incl	0.0015 (0.04)	0.0015 (0.04)
Under 0.3125 (7.94) to 0.0440 (1.12), incl	0.001 (0.03)	0.001 (0.03)
Under 0.0440 (1.12) to 0.0330 (0.84), incl	0.0008 (0.02)	0.0008 (0.02)
Under 0.0330 (0.84) to 0.0240 (0.61), incl	0.0005 (0.013)	0.0005 (0.013)
Under 0.0240 (0.61) to 0.0120 (0.30), incl	0.0004 (0.010)	0.0004 (0.010)
Under 0.0120 (0.30) to 0.0080 (0.20), incl	0.0003 (0.008)	0.0003 (0.008)
Under 0.0080 (0.20) to 0.0048 (0.12), incl	0.0002 (0.005)	0.0002 (0.005)
Under 0.0048 (0.12) to 0.0030 (0.08), incl	0.0001 (0.003)	0.0001 (0.003)

[A] Diameter tolerances are over and under as given in this table. Also, round wire can be produced to tolerances all over and nothing under, or all under and nothing over, or any combination over and under, if the total spread in diameter tolerances for a specified diameter is not less than the total spread given in this table.

[B] The maximum out-of-round tolerance for round wire is one half of the total size tolerance given in this table.

[C] When it is necessary to heat treat after cold finishing because of special mechanical property requirements, tolerances are commonly double those shown.

TABLE 14
SIZE TOLERANCES FOR DRAWN WIRE IN HEXAGONS, OCTAGONS, AND SQUARES

Specified Size,[A] in. (mm)	Size Tolerance, in. (mm) Over	Under
1/2 (12.70)	0	0.004 (0.10)
Under 1/2 (12.70) to 5/16 (7.94), incl	0	0.003 (0.08)
Under 5/16 (7.94) to 1/8 (3.18), incl	0	0.002 (0.05)

[A] Distance across flats.

TABLE 15
LENGTH TOLERANCES FOR ROUND AND SHAPE, STRAIGHTENED AND CUT WIRE, EXACT LENGTH RESHEARED WIRE

Diameter, in. (mm)	Length, ft (mm)	Tolerance, in. (mm) Over	Under
0.125 (3.18) and under	Up to 12 (3,658), incl	1/16 (1.59)	0
0.125 (3.18) and under	Over 12 (3,658)	1/8 (3.18)	0
Over 0.125 (3.18) to 0.500 (12.70), incl	Under 3 (914)	1/32 (0.79)	0
Over 0.125 (3.18) to 0.500 (12.70), incl	3 (914) to 12 (3,658), incl	1/16 (1.59)	0
Over 0.125 (3.18) to 0.500 (12.70), incl	Over 12 (3,658)	1/8 (3.18)	0

TABLE 16
SIZE TOLERANCES FOR WIRE FOR WHICH THE FINAL OPERATION IS A SURFACE TREATMENT FOR THE PURPOSE OF REMOVING SCALE OR DRAWING LUBRICANT

Specified Size, in. (mm)	Tolerance, in. (mm) Over	Under
1/2 (12.70)	0.004 (0.10)	0.004 (0.10)
Under 1/2 (12.70) to 5/16 (7.94), incl	0.003 (0.08)	0.003 (0.08)
Under 5/16 (7.94) to 0.044 (1.12), incl	0.002 (0.05)	0.002 (0.05)
Under 0.044 (1.12) to 0.033 (0.84), incl	0.0013 (0.03)	0.0013 (0.03)
Under 0.033 (0.84) to 0.024 (0.61), incl	0.0008 (0.02)	0.0008 (0.02)

TABLE 17
THICKNESS AND WIDTH TOLERANCES FOR COLD-FINISHED FLAT WIRE

Specified Width, in. (mm)	Thickness Tolerance, in. (mm), Over or Under, for Given Thicknesses, in. (mm) Under 0.029 (0.74)	0.029 (0.74) to 0.035 (0.89), excl	0.035 (0.89) to 3/16 (4.76), excl	Width Tolerance, in. (mm) Over	Under
Under 3/8 (9.52) to 1/16 (1.59), incl	0.001 (0.03)	0.0015 (0.04)	0.002 (0.05)	0.005 (0.13)	0.005 (0.13)

SUPPLEMENTARY REQUIREMENTS

The following supplementary requirements shall be applied only when specified by the purchaser in the inquiry, contract, or order.

S1. Corrosion Tests for UNS N08020

S1.1 One intergranular corrosion test per heat shall be performed by the manufacturer on a sensitized specimen and tested in accordance with Practices A 262. When this supplementary requirement is specified, the specific practice (Practice B or Practice E) shall also be specified. If Practice B is specified, the specimen must pass with a rate of less than 0.002 in./month (ipm).

S1.1.1 In addition to the stablilize anneal, the specimen shall be sensitized for 1 h at 1250°F (677°C) before being subjected to corrosion testing.

S1.1.2 If any specimen selected to represent any heat fails to meet the test requirement, the material represented by such specimen may be reheat-treated and resubmitted for test.

SPECIFICATION FOR ZIRCONIUM AND ZIRCONIUM ALLOY FORGINGS

SB-493

(Identical with ASTM Specification B 493-01, except for section 15.1, which requires mandatory certification.)

1. Scope

1.1 This specification covers three grades of zirconium and zirconium alloy forgings.

1.2 The values stated in inch-pound units are to be regarded as the standard. The values given in parentheses are for information only.

1.3 The following safety hazards caveat pertains only to the test method portion, Section 12, of this specification: *This standard does not purport to address all of the safety problems, if any, associated with its use. It is the responsibility of the user of this standard to establish appropriate safety and health practices and determine the applicability of regulatory limitations prior to use.*

2. Referenced Documents

2.1 *ASTM Standards:*

E 8 Test Methods for Tension Testing of Metallic Materials

3. Terminology

3.1 *Lot Definitions:*

3.1.1 *castings* — a lot shall consist of all castings produced from the same pour.

3.1.2 *ingot* — no definition required.

3.1.3 *rounds, flats, tubes, and wrought powder metallurgical products (single definition, common to nuclear and non-nuclear standards)* — a lot shall consist of a material of the same size, shape, condition, and finish produced from the same ingot or powder blend by the same reduction schedule and the same heat treatment parameters. Unless otherwise agreed between manufacturer and purchaser, a lot shall be limited to the product of an 8 h period for final continuous anneal, or to a single furnace load for final batch anneal.

3.1.4 *sponge* — a lot shall consist of a single blend produced at one time.

3.1.5 *weld fittings* — definition is to be mutually agreed upon between manufacturer and the purchaser.

4. Classification

4.1 The forgings are furnished in three grades as follows:

4.1.1 *Grade R60702* — Unalloyed zirconium.

4.1.2 *Grade R60704* — Zirconium-tin alloy.

4.1.3 *Grade R60705* — Zirconium-niobium alloy.

5. Ordering Information

5.1 Orders for material under this specification shall include the following information:

5.1.1 Quantity (weight and number of pieces),

5.1.2 Name of material (zirconium forgings),

5.1.3 Finish (Section 9),

5.1.4 Dimension (diameter, thickness, length, width, or as specified in appropriate drawings),

5.1.5 ASTM designation and year of issue,

5.1.6 Grade number (see 3.1), and

5.1.7 Additions to the specification and supplementary requirements, if required.

NOTE 1 — A typical ordering description is as follows: 8000-lb zirconium forgings, mechanically descaled 10 by 12 by 12-in. rectangular bar, ASTM B 493, dated ——, Grade R60702.

TABLE 1
CHEMICAL REQUIREMENTS[A]

Element	Composition, % UNS Grade Designation R60702	R60704	R60705
Zirconium + hafnium, min.	99.2	97.5	95.5
Hafnium, max	4.5	4.5	4.5
Iron + chromium	0.2 max	0.2 to 0.4	0.2 max
Tin	. . .	1.0 to 2.0	. . .
Hydrogen, max	0.005	0.005	0.005
Nitrogen, max	0.025	0.025	0.025
Carbon, max	0.05	0.05	0.05
Niobium	. . .	. . .	2.0 to 3.0
Oxygen	0.16	0.18	0.18

[A] By agreement between the purchaser and the manufacturer, analysis may be required and limits established for elements and compounds not specified in the table of chemical composition.

6. Materials and Manufacture

6.1 The forgings shall be formed with conventional forging equipment normally found in primary ferrous and nonferrous metal plants.

6.2 Forgings shall be furnished in the annealed conditions.

7. Chemical Composition

7.1 The material shall conform to the requirements as to chemical composition prescribed in Table 1.

7.2 The manufacturer's ingot analysis shall be considered the chemical analysis for forgings, except for hydrogen and nitrogen, which shall be determined on the finished product.

7.3 When requested by the purchaser and stated in the purchase order, a check analysis for any elements listed in Table 1 shall be made on the finished product.

7.3.1 The manufacturer's analysis shall be considered as verified if the check analysis confirms the manufacturer's reported values within the tolerances prescribed in Table 2.

8. Workmanship and Quality Level Requirements

8.1 The material shall be free of injurious imperfections. Minor surface imperfections may be removed by spot grinding if such grinding does not reduce the dimensions of the finished piece below the minimum permitted by the tolerance for the product.

TABLE 2
PERMISSIBLE VARIATION IN CHECK ANALYSIS BETWEEN DIFFERENT LABORATORIES

Element	Permissible Variation in Product Analysis, %
Hydrogen	0.002
Nitrogen	0.01
Carbon	0.01
Hafnium	0.1
Iron + chromium	0.025
Tin	0.05
Niobium	0.05
Oxygen	0.02

TABLE 3
TENSILE REQUIREMENTS

	UNS Grade Designation R60702	R60704	R60705
Tensile strength, min, ksi (MPa)	55 (379)	60 (413)	70 (483)
Yield strength, min, ksi (MPa)	30 (207)	35 (241)	55 (379)
Elongation in 2 in., or 50 mm, min, %[A]	16	14	16

[A] When a sub-size specimen is used, the gage length shall be as specified in Test Methods E 8 for that specimen.

9. Finish and Appearance

9.1 The forgings shall have one of the following surface conditions as specified:

9.1.1 As forged,

9.1.2 Mechanically descaled, or

9.1.3 Mechanically descaled and pickled.

10. Tensile Requirements

10.1 The material, as represented by the test specimens, shall conform to the tensile properties prescribed in Table 3.

11. Number of Tests and Retests

11.1 Two tension tests shall be made from each lot.

11.2 Two chemistry tests for hydrogen and nitrogen content shall be made from each lot of finished product.

11.3 *Retests:*

11.3.1 If any sample or specimen exhibits obvious surface contamination or improper preparation disqualifying it as a truly representative sample, it shall be discarded and a new sample or specimen substituted.

11.3.2 If the results of any tests of any lot do not conform to the requirements specified, retests shall be made on additional forgings of double the original number from the same lot, each of which shall conform to the requirements specified.

12. Test Methods

12.1 *Tension Tests* — Conduct the tension test in accordance with Test Methods E 8. Determine the yield strength by the offset (0.2%) method. Determine the tensile properties using a strain rate of 0.003 to 0.007 in./in. · min through the yield strength. After the yield strength has been exceeded, increase the cross-head speed to approximately 0.05 in./in. · min to failure.

12.2 *Chemical Tests* — Conduct the chemical analysis by the standard techniques normally used by the manufacturer.

13. Inspection

13.1 The manufacturer shall inspect the material covered by this specification prior to shipment and, on request, shall furnish the purchaser with certificates of test. If so specified in the purchase order, the purchaser or his representative may witness the testing and inspection of the material at the place of manufacture. In such cases, the purchaser shall state in his purchase order which tests he desires to witness. The manufacturer shall give ample notice to the purchaser as to the time and place of the designated tests. If the purchaser's representative does not present himself at the time agreed upon for the testing, the manufacturer shall consider the requirement for the purchaser's inspection at the place of manufacture to be waived.

13.2 The manufacturer shall afford the inspector representing the purchaser, without charge, all reasonable facilities to satisfy him that the material is being furnished in accordance with this specification. This inspection shall be so conducted as not to interfere unnecessarily with the operation of the works.

14. Rejection and Rehearing

14.1 Material that fails to conform to the requirements of this specification may be rejected. Rejection should be reported to the producer or supplier promptly and in writing. In case of dissatisfaction with the results of the test, the producer or supplier may make claim for a rehearing.

15. Certification

15.1 A producer's or supplier's certification shall be furnished to the purchaser that the material was manufactured, sampled, tested, and inspected in accordance with this specification and has been found to meet the requirements. A report of the test results shall be furnished.

16. Referee

16.1 In the event of disagreement between the manufacturer and the purchaser on the conformance of the material to the requirements of this specification or any special test specified by the purchaser, a mutually acceptable referee shall perform the tests in question. The results of the referee's testing shall be used in determining conformance of the material to this specification.

17. Product Marking

17.1 Unless otherwise specified, each forging over 2 lb (0.9 kg), manufactured in accordance with this specification, shall be marked legibly, either by stenciling, stamping, or rolling with the manufacturer's private identification mark, the ASTM designation, the grade, and lot number. On smaller than 2-lb forgings, the same information shall be stamped legibly on the container, or on a metal tag securely fastened to each part or package of parts.

18. Packaging and Package Marking

18.1 The forgings shall be packaged either in a suitable box or banded on a skid.

19. Keywords

19.1 zirconium; zirconium alloy for

SUPPLEMENTARY REQUIREMENTS

S1. Special Internal Soundness

S1.1 Forging shall be produced with specified internal soundness to be verified by electric test or radiography to standards agreed upon between the manufacturer and the purchaser prior to the acceptance of the order.

S2. Surface Quality

S2.1 The surface quality shall be as agreed upon between the manufacturer and the purchaser.

SPECIFICATION FOR CASTINGS, NICKEL AND NICKEL ALLOY

SA-494/SA-494M

(Identical with ASTM Specification A 494/A 494M-99, except that certification has been made mandatory.)

1. Scope

1.1 This specification covers nickel, nickel-copper, nickel-copper-silicon, nickel-molybdenum, nickel-chromium, and nickel-molybdenum-chromium alloy castings for corrosion-resistant service.

1.2 The values stated in either inch-pound units or SI units are to be regarded separately as standard. Within the text, the SI units are shown in brackets. The values stated in each system are not exact equivalents; therefore, each system must be used independently of the other. Combining values from the two systems may result in nonconformance with the specification. Inch-pound units are applicable for material ordered to Specification A 494 and SI units for material ordered to Specification A 494M.

2. Referenced Documents

2.1 *ASTM Standards:*

A 370 Test Methods and Definitions for Mechanical Testing of Steel Products

A 488/A 488M Practice for Steel Castings, Welding, Qualifications of Procedures and Personnel

A 732/A 732M Specification for Castings, Investment, Carbon and Low-Alloy Steel for General Application, and Cobalt Alloy for High Strength at Elevated Temperatures

A 781/A 781M Specification for Castings, Steel and Alloy, Common Requirements, for General Industrial Use

E 8 Test Methods for Tension Testing of Metallic Materials

E 29 Practice for Using Significant Digits in Test Data to Determine Conformance with Specifications

E 30 Test Methods for Chemical Analysis of Steel, Cast Iron, Open-Hearth Iron, and Wrought Iron

E 38 Methods for Chemical Analysis of Nickel-Chromium and Nickel Chromium-Iron Alloys

E 76 Test Methods for Chemical Analysis of Nickel-Copper Alloys

E 354 Test Methods for Chemical Analysis of High-Temperature, Electrical, Magnetic, and Other Similar Iron, Nickel, and Cobalt Alloys

3. Terminology

3.1 *Definitions:*

3.1.1 *master heat* — a single furnace charge of refined alloy which may either be poured directly into castings or into remelt alloy for individual melts.

3.1.2 *melts* — a single furnace charge poured into castings. When master heats are used to prepare melts, a melt analysis shall be reported.

4. General Conditions for Delivery

4.1 Material furnished to this specification shall conform to the requirements of Specification A 781/A 781M, including any supplementary requirements that are indicated in the purchase order. Failure to comply with the general requirements of Specification A 781/ A 781M constitutes nonconformance with this specification. In case of conflict between the requirements of this specification and Specification A 781/A 781M, this specification shall prevail.

5. Ordering Information

5.1 Orders for castings to this specification should include the following information:

5.1.1 Quantity, in pieces, and

5.1.2 Grade designation (Table 1) and class (Table 2).

5.2 The purchaser shall specify any of the following information required to describe adequately the desired material:

5.2.1 Heat treat condition (see 6.1 and 6.2),

5.2.2 Repair welding (see 11),

5.2.3 Source inspection requirements, if any (see Specification A 781/A 781M),

5.2.4 Marking-for-identification requirements, if any (see 13.1), and

5.2.5 Supplementary requirements desired, including the standards of acceptance.

6. Heat Treatment

6.1 Castings shall be heat treated in accordance with the requirements in Table 2.

NOTE 1 — Proper heat treatment of these alloys is usually necessary to enhance corrosion resistance and, in some cases, to meet mechanical properties. Minimum heat treat temperatures are specified; however it is sometimes necessary to heat treat at higher temperatures, hold for some minimum time at temperature, and then rapidly cool the castings in order to enhance the corrosion resistance and meet mechanical properties.

6.2 When Class 1 is specified, grades CY40 and M-25S shall be supplied in the as-cast condition. When Class 2 is specified, grades CY40 and M-25S shall be supplied in the solution-treated condition. When Class 3 is specified, grade M-25S shall be supplied in the age-hardened condition.

7. Chemical Composition

7.1 These alloys shall conform to the chemical composition requirements prescribed in Table 1.

7.2 An analysis of each master heat shall be made by the manufacturer to determine the percentages of the elements specified in Table 1. The analysis shall be made from a representative sample taken during the pouring of the master heat. Chemical composition shall be reported to the purchaser or his representative.

7.3 Test Methods E 76 or Test Methods E 354 shall be used for referee purposes. Test Methods E 30 or Methods E 38 shall be used if Test Methods E 76 or Test Methods E 354 do not include a method for some element present in the material.

8. Tensile Properties

8.1 One tension test shall be made from each master heat except for grades M-25S and CY5SnBiM when the master heat is used to pour castings. One tension test shall be made from each melt except for grades M-25S and CY5SnBiM. Test results shall conform to the tensile requirements specified in Table 3. Test bars shall be poured in special blocks from the same heat as the castings represented.

8.2 The bar from which the test specimen is taken shall be heat treated in production furnaces to the same procedure as the castings it represents. If the castings are not heat treated, the bar used for the test specimen must not be heat treated.

8.3 Test specimens may be cut from castings, at the producer's option, instead of from test bars.

8.4 When castings are produced by methods other than investment process, tension test coupons shall be machined to the form and dimension shown in Fig. 8 of, and tested in accordance with, Test Methods E 8.

8.4.1 When castings are produced by the investment process, test specimens in accordance with Specification A 732/A 732M shall be used for measurement of tensile properties.

8.5 If any specimen shows defective machining or develops flaws, it may be discarded and another substituted from the same heats.

8.6 To determine conformance with the tension test requirements, an observed value or calculated value shall be rounded in accordance with Practice E 29 to the nearest 500 psi [3.5 MPa] for yield and tensile strength and to the nearest 1% for elongation and reduction of area.

9. Workmanship, Finish, and Appearance

9.1 Critical surfaces of all castings intended for corrosion-resistant service shall be cleaned. Cleaning may be accomplished by blasting with clean sand or metallic corrosion-resistant shot or by other approved methods.

10. Quality

10.1 The castings shall not be peened, plugged, or impregnated to stop leaks.

10.2 Internal chills and chaplets may be used in the manufacture of castings. However, the chills, chaplets, and affected material must be removed.

11. Repair by Welding

11.1 Repairs shall be made by using a welding procedure and operators capable of producing sound welds.

TABLE 1
CHEMICAL REQUIREMENTS

Element	Composition, %															
	CZ-100	M-35-1 [A]	M-35-2	M-30H	M-25S	M-30C [A]	N-12MV	N-7M	CY-40	CW-12MW	CW-6M	CW-2M	CW-6MC	CY5SnBiM	CX2MW (N26022)	CU5MCuC (N28820)
C, max	1.00	0.35	0.35	0.30	0.25	0.30	0.12	0.07	0.40	0.12	0.07	0.02	0.06	0.05	0.02	0.050 max
Mn, max	1.50	1.50	1.50	1.50	1.50	1.50	1.00	1.00	1.50	1.00	1.00	1.00	1.00	1.5	1.00	1.0 max
Si, max	2.00	1.25	2.00	2.7–3.7	3.5–4.5	1.0–2.0	1.00	1.00	3.00	1.00	1.00	0.80	1.00	0.5	0.80	1.0 max
P, max	0.03	0.03	0.03	0.03	0.03	0.03	0.040	0.040	0.03	0.040	0.040	0.03	0.015	0.03	0.025	0.030 max
S, max	0.03	0.03	0.03	0.03	0.03	0.03	0.030	0.030	0.03	0.030	0.030	0.03	0.015	0.03	0.025	0.030 max
Cu	1.25 max	26.0–33.0	26.0–33.0	27.0–33.0	27.0–33.0	26.0–33.0	...	...	...	...	...	...	...	...	...	1.50–3.50
Mo	...	...	...	...	...	...	26.0–30.0	30.0–33.0	...	16.0–18.0	17.0–20.0	15.0–17.5	8.0–10.0	2.0–3.5	12.5–14.5	2.5–3.5
Fe	3.00 max	3.50 max	3.50 max	3.50 max	3.50 max	3.50 max	4.0–6.0	3.00 max	11.0 max	4.5–7.5	3.0 max	2.0 max	5.0 max	2.0 max	2.0–6.0	Balance
Ni	95.00 min.	Balance	Balance	Balance	Balance	Balance	Balance	Balance	Balance	Balance	Balance	Balance	Balance	Balance	Balance	38.0–44.0
Cr	...	...	...	...	...	...	1.00	1.0	14.0–17.0	15.5–17.5	17.0–20.0	15.0–17.5	20.0–23.0	11.0–14.0	20.0–22.5	19.5–23.5
Cb (Nb)	...	0.5max	0.5 max	...	...	1.0–3.0	...	...	...	...	...	...	3.15–4.50	...	...	0.60–1.20
W	...	...	...	...	...	...	...	...	...	3.75–5.25	...	1.0 max	...	...	2.5–3.5	...
V	...	...	...	...	...	...	0.20–0.60	...	...	0.20–0.40	...	...	...	...	0.35 max	...
Bi	...	...	...	...	...	...	...	...	...	...	...	...	...	3.0–5.0	...	...
Sn	...	...	...	...	...	...	...	...	...	...	...	...	...	3.0–5.0	...	...

NOTE — Values are maximum unless otherwise indicated.

[A] Order M-35-1 or M-30C when weldability is required.

TABLE 2
HEAT TREAT REQUIREMENTS

Grade	Heat Treatment
CZ-100, M-35-1,M-35-2, CY-40 Class 1, M-30H, M-30C, M-25S Class 1, CY5SnBiM	As cast
M-25S, Class 2 [Note (1)]	Load into furnace at 600°F [315°C] maximum. Heat to 1,600°F [870°C] and hold for 1 h plus an additional 30 min, for each ½ in. [13 mm] of cross section over 1 in. [Note (2)] Cool to 1,300°F [705°C] [Note (3)] and hold at temperature for 30 min then quench in oil to room temperature.
M-25S, Class 3	Load into furnace at 600°F [315°C] maximum. Heat slowly to 1,100°F [605°C] and hold to develop maximum hardness. Furnace or air cool to room temperature.
N-12MV, N-7M	Heat to 2,000°F [1,095°C] minimum, hold for sufficient time to heat castings to temperature, quench in water or rapid cool by other means.
CW-12MW, CW-6M, CW-6MC, CW-2M	Heat to 2,150°F [1,175°C] minimum, hold for sufficient time to heat castings to temperature, quench in water or rapid cool by other means.
CY-40, Class 2	Heat to 1,900°F [1,040°C] minimum, hold for sufficient time to heat castings to temperature, quench in water or rapid cool by other means.
CX2MW (N26022)	Heat to 2,200°F [1,205°C] minimum, hold for sufficient time to heat castings to temperature, quench in water or rapid air cool by other means.
CU5MCuC (N28820)	Heat to 2,100°F [1,150°C] minimum, hold for sufficient time to heat castings to temperature, quench in water. Stabilize at 1,725–1,815°F [940–990°C], hold for sufficient time to heat castings to temperature, quench in water or rapid cool by other means.

NOTES:
(1) M-25S, while machinable in the *as cast* condition, is capable of being solution treated for improved machinability. It may be subsequently age hardened to the hardness specified in Table 3 and finished machined or ground.
(2) For cross sections over 6 in. [125 mm] it may be necessary to increase the hold time if maximum softness is desired.
(3) For maximum softness and the least variation in hardness levels, castings should be transferred from an oven at 1,600°F [870°C] to a second oven at 1,300°F [705°C].

The composition of deposited weld metal shall be similar to that of the castings.

11.2 Weld repairs shall be considered major in the case of a casting that has leaked on hydrostatic test or when the depth of the cavity after preparation for repair exceeds 20% of the actual wall thickness, or 1 in. [25 mm], whichever is smaller, or when the extent of the cavity exceeds approximately 10 in.^{2} [65 cm^2]. All other weld repairs shall be considered minor. Major and minor weld repairs shall be subject to the same quality standards as are used to inspect the castings.

11.3 Castings of M-30H, M-25S, and CY5SnBiM may not be weld repaired.

11.4 Grades N-12MV, N-7M, CW-12MW, CW-6M, CW-2M, and CX2MW may require post weld heat treatment after major weld repairs. If post weld heat treatment is required, it must be specified along with the grade. If required, it shall be performed in accordance with Section 6.

11.5 For Grade CU5MCuC, the composition of the deposited weld metal shall be similar to that of AWS A5.14 ER NiCrMo-3 (UNS N06625) or AWS A5.11 E NiCrMo-3 (UNS W86112).

12. Rejection and Rehearing

12.1 Samples that represent rejected material shall be preserved for two weeks from the date of transmission of the rejection report. In case of dissatisfaction with the results of the tests, the manufacturer may make claim for a rehearing within that time.

13. Certification

13.1 A manufacturer's certification shall be furnished to the purchaser stating that the material has been manufactured, tested, and inspected in accordance with this specification, and that the test results on representative samples meet specification requirements. A report of the test results shall be furnished.

14. Product Marking

14.1 Castings shall be marked for the material identification with the ASTM specification designation (A 494/A 494M) and grade symbol, that is, CY-40. The manufacturer's name or identification mark and the pattern number shall be cast or stamped on all castings except those of such small size as to make such marking impractical. To

TABLE 3
MECHANICAL PROPERTIES

	CZ-100	M-35-1	M-35-2	M-30H	M-25S	M-30C	N-12MV	N-7M	CY-40	CW-12MW	CW-6M	CW-2M	CW-6MC	CY5SnBiM	CX2MW (N26022)	CU5MCuC (N28820)
Tensile strength, min., psi [MPa]	50,000 [345]	65,000 [450]	65,000 [450]	100,000 [690]	...	65,000 [450]	76,000 [525]	76,000 [525]	70,000 [485]	72,000 [495]	72,000 [495]	72,000 [495]	70,000 [485]	...	80,000 [550]	75,000 [520]
Yield strength, min., psi [MPa]	18,000 [125]	25,000 [170]	30,000 [205]	60,000 [415]	...	32,500 [225]	40,000 [275]	40,000 [275]	28,000 [195]	40,000 [275]	40,000 [275]	40,000 [275]	40,000 [275]	...	45,000 [280]	35,000 [240]
Elongation in 2 in. [50 mm], [A] min., %	10.0	25.0	25.0	10.0	...	25.0	6.0	20.0	30.0	4.0	25.0	20.0	25.0	...	30.0	20.0
Hardness, HBN	...	...	...	...	[B]	...	...	...	...	...	...	...	...	...	...	...

[A] When ICI test bars are used in tensile testing as provided for in Specification A 732/A 732M, the gage length to reduced section diameter ratio shall be 4 to 1.
[B] 300 HB minimum for the age hardened condition.

minimize small defects caused by dislodged particles of molding sand, the number of cast identification marks shall be minimized. The marking of heat numbers on individual castings shall be agreed upon by the manufacturer and the purchaser. Markings shall be in such position as not to injure the usefulness of the casting.

14.1.1 When the castings are too small to mark individually, a symbol traceable to the heat shall be placed on the castings and the required identification then placed on a tag affixed to the container in which these castings are shipped.

15. Keywords

15.1 corrosion resistant applications; nickel; nickel alloy castings; nickel alloys; nickel castings

SUPPLEMENTARY REQUIREMENTS

The following supplementary requirements shall not apply unless specified in the purchase order. A list of standard supplementary requirements for use at the option of the purchaser is included in Specification A 781/A 781M. Those which are ordinarily considered for use with this specification are given below; others enumerated in Specification A 781/A 781M may be used with this specification upon agreement between the manufacturer and the purchaser.

S2. Radiographic Examination

S3. Liquid Penetrant Examination

S6. Certification

S10. Hardness Tests

S10.1 When composition M-25S material is ordered with a hardness maximum or range in the as-cast or solution treated condition, hardness tests shall be made in accordance with Test Methods and Definitions A 370. The test location, number of tests, and hardness values shall be agreed upon between the manufacturer and purchaser.

S10.1.1 If castings are ordered in the as-cast condition, hardness determinations shall be made on two different representative areas of each casting or coupon selected for test.

S10.1.1.1 By agreement between purchaser and producer, those as-cast castings which fail to meet the required hardness may be accepted in the solution annealed and hardened condition if the hardness thus developed meets the hardness requirement of the specification.

S10.1.2 If castings ordered are in the solution-treated condition, two sample castings or two coupons representing the lot shall be heat treated for tests (see S1.1.2). Hardness determinations shall be made on two different representative areas of each casting or coupon.

S10.1.3 When hardness tests are made, the specimens shall be at least $\frac{1}{4}$ in. [6 mm] in thickness and the area to be tested shall be ground clean before the hardness tests are made.

S22. Weldability Test

S22.1 If weldability tests are specified for M-30-C or M-35-1, prepare a coupon obtained from a test bar shown in Fig. 1 or Fig. 2 for each lot of composition M-30-C or M-35-1 castings. The weld test to be used shall be agreed upon between the purchaser and manufacturer.

S22.1.1 Prepare and weld the test bar cast in accordance with Fig. 1 in accordance with Fig. 3.

S22.1.1.1 Machine the cast skin and unsound metal from two adjacent faces of the as-cast specimen, exclude the riser face, and cut the specimen into approximately 6-in. [150-mm] lengths.

S22.1.1.2 Clamp the two 6-in. [150 mm] lengths together to form a double V-joint and weld two passes at a time on alternate sides of the specimen using $\frac{1}{8}$-in. [3-mm] diameter electrodes that will deposit metal of similar composition of the test pieces.

S22.1.1.3 Allow the specimen to cool to room temperature between passes, remove all flux, and examine visually for cracks.

S22.1.1.4 The clamps may be removed from the specimen after the first two weld passes have been completed.

S22.1.1.5 Deposit alternate series of passes until the double V-groove has been completely filled. After the second series (number 4 pass) a $\frac{5}{32}$-in. [4-mm] diameter electrode may be used if desired.

S22.1.1.6 During welding allow each pass to cool, clean, and examine visually for cracks. The presence of cracks shall be cause for rejection.

S22.1.1.7 Upon completion of the welding, cut one section approximately $\frac{3}{4}$ in. [19 mm] long transverse to the weld from each end and discard.

S22.1.1.8 Polish each end of the remaining center section on a 100/200-grit wheel and etch with concentrated HNO_3 or with Lepito's etchant. Prepare Lepito's etchant as follows: (*a*) 15 g of $(NH_4)_2SO_4$ dissolved in 75 cm^3 of water; (*b*) 250 g of $FeCl_3$ (powdered) dissolved in 100 cm^3 of HCl; (*c*) mix solutions (*a*) and (*b*) and add 30 cm^3 of HNO_3.

S22.1.1.9 Examine the etched section under low magnification (5 to 10×). The lot represented by the test specimen shall be accepted if it complies with the following crack requirements: (*a*) Three cracks maximum

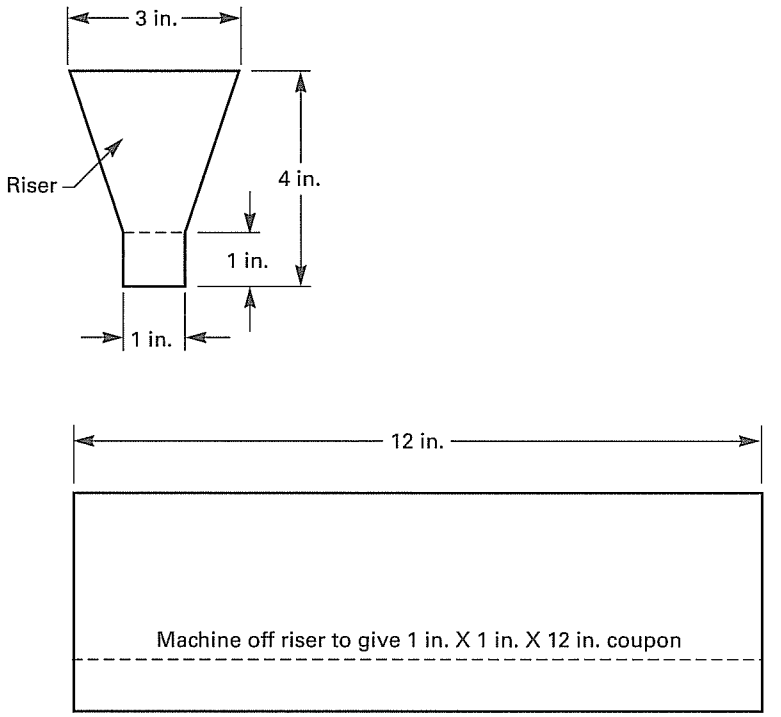

Metric Equivalent

in.	1	3	4	12
(mm)	(25)	(75)	(100)	(305)

NOTE: Riser shall be machined off and 1 in. (25 mm) square by 12 in. (305 mm) coupon shall be used for x-weld test. See Fig. 3.

FIG. 1 WELD TEST BAR (AS CAST)

in linear inch of base metal and (*b*) The length of any crack in the base metal does not exceed 0.20 in. [5 mm].

S22.1.1.10 Cracks observed in the weld metal during the low-magnification examination shall not be cause for rejection.

S22.1.1.11 Failure of welded test bars to comply with any of the requirements S22.1 through S22.1.1.10 shall result in rejection of the lot represented.

S22.1.2 Prepare and weld the test bar cast in accordance with Fig. 2 as follows:

S22.1.2.1 Fill the groove in the block completely with weld deposit using manual metallic arc process with $\frac{1}{8}$-in. [3.2-mm] or $\frac{5}{32}$-in. [4-mm] diameter electrodes that will deposit metal of similar composition of the test piece.

S22.1.2.2 Remove one $\frac{3}{8}$-in. [10-mm] thick bend coupon longitudinally from the welded block by machining, sawing, abrasive cutting, or other suitable means. Make a transverse side bend test of the welded joint in accordance with Practice A 488/A 488M.

S22.1.2.3 Remove a transverse weld macro-specimen from the welded plate and visually examine for cracks. This specimen may be the same one to be used for the bend specimen.

S22.1.3 *Acceptance:*

S22.1.3.1 Cracks as tears in the casting in the fusion zone or heat-affected zone of the macro-specimen shall be cause for rejection. Cracks originating at the weld bead undercuts, at weld slag inclusions, or at casting defects shall not be cause for rejection.

S22.1.3.2 Cracks or other open defects exceeding $\frac{1}{8}$-in. [3.2 mm] measured in any direction on the convex surface of the bent specimens shall be cause for rejection, except that cracks occurring on the corners while testing and cracks originating at weld bead undercuts shall not be considered.

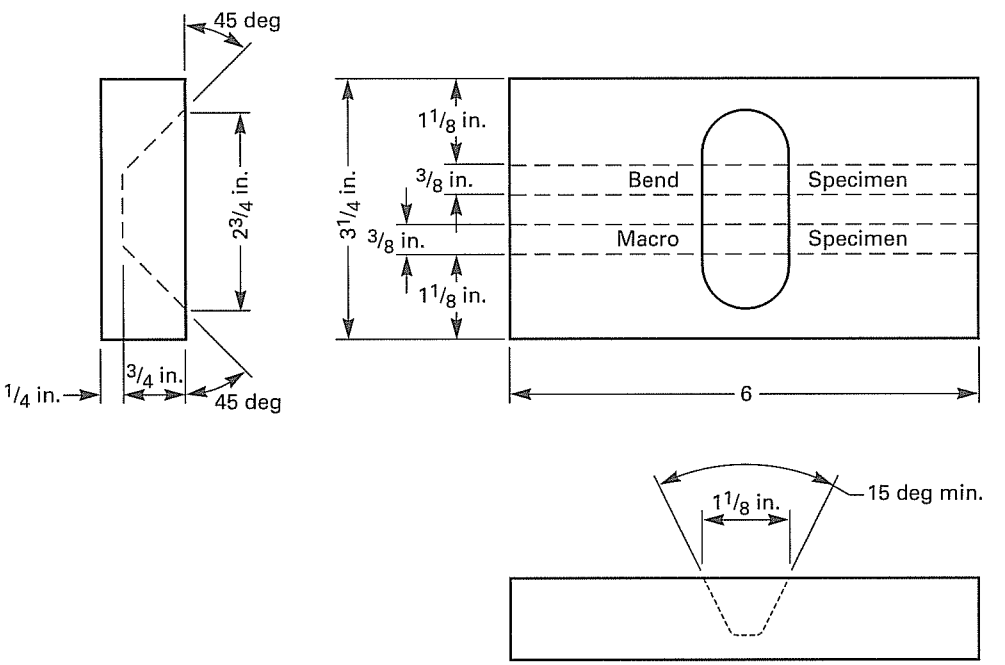

Metric Equivalents

in.	1/4	3/8	3/4	1 1/8	2 3/4	3 1/4	6
(mm)	(5)	(10)	(20)	(30)	(70)	(85)	(155)

FIG. 2 WELD TEST BAR (AS CAST)

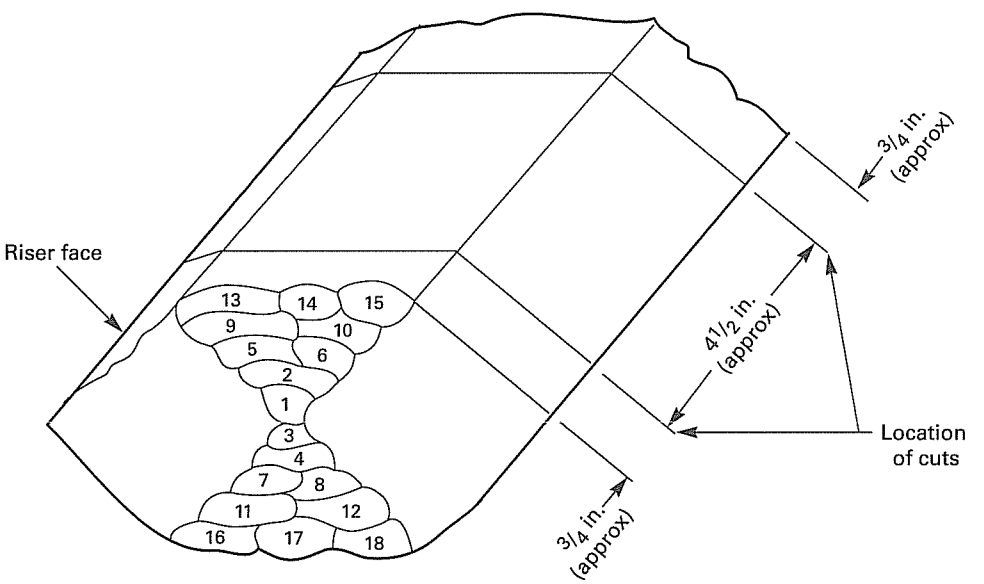

Metric Equivalents

in.	3/4	4 1/2
(mm)	(20)	(115)

FIG. 3 X-WELD TEST

SPECIFICATION FOR COPPER-BASE ALLOY CONTINUOUS CASTINGS

SB-505

(Identical with ASTM Specification B 505-96 for the alloy and temper covered except for the deletion of Supplementary Requirements for government procurement. Marking and certification have been made mandatory.)

1. Scope

1.1 This specification establishes requirements for continuously cast rod, bar, tube, and shapes produced from copperbase alloys with nominal compositions as listed in Table 1.

1.2 The values stated in inch-pound units are the standard. SI values given in parentheses are provided for information purposes only.

2. Referenced Documents

2.1 The following documents in the current issue of the Book of Standards form a part of this specification to the extent referenced herein:

2.1.1 *ASTM Standards:*

B 208 Practice for Preparing Tension Test Specimens for Copper-Base Alloys for Sand, Permanent Mold, Centrifugal, and Continuous Castings

E 8 Test Methods for Tension Testing of Metallic Materials

E 10 Test Method for Brinell Hardness of Metallic Materials

E 18 Test Methods for Rockwell Hardness and Rockwell Superficial Hardness of Metallic Materials

E 527 Practice for Numbering Metals and Alloys (UNS)

2.1.2 *ASME Standard:*

SB-824 Specification for General Requirements for Copper Alloy Castings

3. Ordering Information

3.1 Orders for continuous castings under this specification shall include the following information:

3.1.1 Specification title, number, and year of issue,

3.1.2 Quantity, dimensions, and temper,

3.1.3 Copper Alloy UNS Number,

3.1.4 Tolerances, if different from Section 8 and Table 2, Table 3, Table 4, Table 5, Table 6, Table 7, and Table 8,

3.2 The following requirements are optional and should be specified in the purchase order when required.

3.2.1 Chemical analysis of residual elements (Section 5),

3.2.2 Mechanical requirements (Section 6),

3.2.3 Witness inspection (Specification SB-824),

3.2.4 Foundry test report (Specification SB-824),

3.2.5 Castings for seawater service (Section 4),

TABLE 1
NOMINAL COMPOSITION

Copper Alloy UNS No.	Designation	Composition, %							
		Copper	Tin	Lead	Zinc	Nickel	Aluminum	Iron	Manganese
C95200	aluminum bronze	88	...	...	...	...	9	3	...

TABLE 2
FINISHING ALLOWANCES FOR TUBE (ROUND ONLY)

Finished Outside Diameter, in. (mm)	Finished Allowances Added to Finished or Print Dimensions of the Part, in. (mm)	
	Inside Diameter	Outside Diameter
Up to 3 (76.2), incl	−0.125 (−3.2)	+0.063 (1.6)
Over 3 (76.2) to 4 (102), incl	−0.125 (−3.2)	+0.094 (2.4)
Over 4 (102) to $5^1/_2$ (140), incl	−0.188 (−4.8)	+0.125 (3.2)
Over $5^1/_2$ (140)	−0.250 (−6.4)	+0.188 (4.8)

TABLE 3
FINISHING ALLOWANCES FOR ROD AND BAR

Finished Outside Diameter or Distance Between Parallel Surfaces, in. (mm)	Rounds	Squares, Rectangles, Hexagons, Octagons
Up to 3 (76.2), incl	+0.0625 (1.6)	+0.0625 (1.6)
Over 3 (76.2) to 4 (102), incl	+0.093 (2.4)	+0.0625 (1.6)
Over 4 (102) to $5^1/_2$ (140), incl	+0.125 (3.2)	+0.0625 (1.6)
Over $5^1/_2$ (140)	+0.188 (4.8)	+0.0625 (1.6)

TABLE 4
DIAMETER TOLERANCES FOR ROD AND BAR

Diameter or Distance Between Parallel Surfaces, in. (mm)	Tolerances, Plus[A] and Minus,[A] in. (mm)	
	Rounds	Squares, Rectangles, Hexagons, Octagons
Up to 3 (76.2), incl	0.010 (0.25)	0.020 (0.51)
Over 3 (76.2) to 4 (102), incl	0.015 (0.38)	0.020 (0.51)
Over 4 (102) to $5^1/_2$ (140), incl	0.020 (0.51)	0.020 (0.51)
Over $5^1/_2$ (140)	0.025 (0.64)	0.025 (0.64)

[A] When tolerances are specified as all plus or all minus, double the values given.

TABLE 5
DIAMETER TOLERANCES FOR TUBE (ROUND ONLY)

Average Outside Diameter, in. (mm)	Tolerances, in. (mm)		
	Outside Diameter	Inside Diameter	
	Plus[A] or Minus[A]	Plus[B]	Minus[B]
Up to 3 (76), incl	0.010 (0.25)	0.012 (0.32)	0.033 (0.84)
Over 3 (76) to 4 (102), incl	0.015 (0.38)	0.015 (0.38)	0.050 (1.3)
Over 4 (102) to $5^1/_2$ (140), incl	0.020 (0.51)	0.025 (0.64)	0.070 (1.8)
Over $5^1/_2$ (140)	0.025 (0.64)	0.035 (0.86)	0.090 (2.3)

[A] When tolerances are specified as all plus or all minus, double the values given.
[B] When tolerances are specified as all plus or all minus, total the values given.

TABLE 6
ROUNDNESS TOLERANCES

Outside Diameter, in. (mm)	Maximum Out-of-Roundness[A] in. (mm)
Up to 3 (76.2), incl	0.025 (0.64)
Over 3 (76.2) to 4 (102), incl	0.040 (1.0)
Over 4 (102) to $5^1/_2$ (140), incl	0.060 (1.5)
Over $5^1/_2$ (140)	0.075 (1.9)

[A] The deviation from roundness is measured as the difference between major and minor diameter as determined at any one cross section of the tube.

TABLE 7
TOLERANCES FOR SHAPES

Dimensional tolerances for Copper Alloy UNS No. C95200 shall be subject to agreement between purchaser and manufacturer.

3.2.6 Approval of weld repair and records of repairs (Section 9).

3.3 Certification and product marking are required (Specification SB-824).

4. Chemical Composition

4.1 The continuous castings shall conform to the requirements for major elements shown in Table 10.

4.2 These specification limits do not preclude the presence of other elements. Limits may be established and analysis required for unnamed elements agreed upon between the manufacturer or supplier and the purchaser. Copper or zinc may be given as remainder and may be taken as the difference between the sum of all elements analyzed and 100%. When all named elements in Table 10 are analyzed, their sum shall be as specified in Table 11.

4.3 It is recognized that residual elements may be present in cast copper-base alloys. Analysis shall be made for residual elements only when specified in the purchase order.

5. Mechanical Properties

5.1 Reference should be made to Table 9 for minimum mechanical requirements.

5.2 Mechanical tests are required only when specified by the purchaser in the purchase order.

5.3 Exceptions to mechanical property requirements may be taken in the case of small diameter solids or castings having section thicknesses less than the $^1/_2$-in. (12.7-mm) diameter nominal size of the standard tension test specimen. In these cases, mechanical property requirements shall be subject to agreement between the purchaser and the manufacturer. For suggested dimensions of subsize test bars see Test Methods E 8.

6. ASME Requirements

6.1 Continuous castings shall comply with the following:

6.1.1 Certification requirements of SB-824.

6.1.2 Foundry test report requirements of Specification SB-824.

6.1.3 Continuous castings shall be marked with the manufacturers, the Copper Alloy UNS No., and the casting quality factor. In addition, heat numbers, or serial numbers that are traceable to heat numbers, shall be marked on all pressure-containing castings individually weighing 50 lb (22.7 kg) or more. Pressure-containing castings weighing less than 50 lb (22.7 kg) shall be marked with either the heat number or a serial number that will identify the casting as to the month in which it was poured. Marking shall be in such a position as not to injure the usefulness of the casting.

6.1.4 A sample from each 2000-lb interval or continuous casting shall be tested. Each continuous casting from which the test bar was taken shall be identified should retesting be required. If all of the test bars from the initial sampling meet the requirements the lot shall be acceptable. The fractured bars shall be retained for chemical verification.

7. Dimensions and Permissible Variations

7.1 Allowance for finishing over maximum outside dimension and under inside dimension of round tubes to be machined shall be as shown in Table 3. Allowances for finishing the outside diameter of rounds and distance between parallel surfaces of bars to be machined shall be as shown in Table 4. Table 3 and Table 4 are to be used in conjunction with Tolerance Table 6 and Table 5, respectively.

7.2 *Concentricity:*

7.2.1 *Copper Alloy UNS No. C95200.* The outside periphery of continuously cast tubing shall be concentric with the bore within a permissible variation of 4% of the nominal wall thickness.

7.3 *Diameter Tolerances for Continuously Cast Rod and Bar* — See Table 5.

7.4 *Tolerances of Average Diameter for Continuously Cast Tube (Round Only)* — See Table 6.

TABLE 8
MECHANICAL REQUIREMENTS

Copper Alloy UNS No.	Tensile Strength, min[A] ksi[B]	Tensile Strength, min[A] MPa[C]	Yield Strength, at 0.5 % Extension Under Load, Min[A] ksi[B]	Yield Strength, at 0.5 % Extension Under Load, Min[A] MPa[C]	Elongation in 2 in. or 50 mm, min, %	Brinell Hardness, min	Remarks
C95200	68	469	26	179	20	...	...

[A] Minimum tensile strength and yield strength shall be reduced 10% for cast bars having a cross section, thickness, diameter, or wall of 4 in. (102 mm) or more. The cross sections are the diameter of a round solid, the distance across the flats of a solid hexagon, the thickness of a rectangle, and the wall thickness of a tube.
[B] ksi = 1000 psi.
[C] See Appendix.

TABLE 9
CHEMICAL REQUIREMENTS

Copper Alloy UNS No.	Composition, % Copper	Tin	Lead	Zinc	Nickel Including Cobalt	Aluminum	Iron	Manganese	Antimony	Phosphorus	Silicon	Sulfur
C95200	86.0 min	...	...	...	...	8.5–9.5	2.5–4.0	...	...	...	...	...

TABLE 10
SUM OF ALL NAMED ELEMENTS ANALYZED

Copper Alloy UNS No.	Copper Plus Named Elements, % min
C95200	99.0

TABLE 11
STRAIGHTNESS TOLERANCES

Product	Length,[A] ft (m)	Maximum Curvature[B] (Depth of Arc), in. (mm)
Round rod or tube	up to 10 (3.05)	1/4 (6.4) in any 5-ft (1.52-m) portion
	10 (3.05) and over	1/2 (13) in any 10-ft (3.05-m) portion[A]
Bar and shape	any length	1/2 (13) in any 6-ft (1.83-m) portion[A,B]

[A] Of total length.
[B] Applicable to any longitudinal surface or edge.

7.5 *Roundness* — For continuously cast tubing in straight lengths, the roundness tolerances shall be as shown in Table 7.

7.6 *Dimensional Tolerances for All Other Shapes (Not Covered By 7.1 or 7.2)* — See Table 8.

7.7 *Straightness Tolerances for Continuously Cast Rod, Tube, Bars, and Shapes* — See Table 12.

8. Casting Repair

8.1 Continuous castings shall not be mechanically repaired, plugged, or burned in.

8.2 Weld repair is permitted for Copper Alloy UNS No. C95200.

8.3 Weld repairs may be made at the manufacturer's discretion provided each excavation does not exceed 20% of the casting section or wall thickness or 4% of the casting surface area.

8.4 Excavations that exceed those described in 8.2 may be made at the manufacturer's discretion except that when specified in the purchase order (4.1.12), the weld procedure shall be approved by the purchaser and the following records shall be maintained:

8.4.1 A sketch or drawing showing the dimensions, depth, and location of excavations,

8.4.2 Post-weld heat treatment, when applicable,

8.4.3 Weld repair inspection results,

8.4.4 Casting identification number,

8.4.5 Weld procedure identification number,

8.4.6 Welder identification, and

8.4.7 Name of inspector.

8.5 The castings shall not be impregnated without approval of the purchaser.

8.6 Weld repair of other alloys in this specification is not permitted without approval by the purchaser.

9. General Requirements

9.1 The following sections of Specification SB-824 form a part of this specification:

9.1.1 Terminology (Section 3),

9.1.2 Other Requirements (Section 7),

9.1.3 Workmanship, Finish, and Appearance (Section 9),

9.1.4 Number of Tests and Retests (Section 11),

9.1.5 Specimen Preparation (Section 12),

9.1.6 Test Methods (Section 13),

9.1.7 Significance of Numerical Limits (Section 14),

9.1.8 Inspection (Section 15),

9.1.9 Rejection and Rehearing (Section 16),

9.1.10 Certification (Section 17),

9.1.11 Test Report (Section 18),

9.1.12 Product Marking (Section 19), and

9.1.13 Packaging and Package Marking (Section 20).

10. Sampling

10.1 Unless otherwise specified, a lot shall consist of castings of the same composition and same cross-sectional dimensions, produced during the continuous operation of one casting machine, and submitted for inspection at one time.

10.2 A sample for chemical analysis shall be taken from each lot at each interval of 2000 lb (910 kg) of continuous production of the lot. When castings are produced from alloy ingots of known composition, the sampling interval may be raised to one sample for each 4000 lb (1810 kg) of continuous production of the lot.

10.3 One sample for tension testing shall be taken from each lot. This sample may be taken before mechanical straightening. Test coupons shall be positively identified with the castings they represent. Where castings are heat treated, test coupons shall be heat treated with the castings they represent.

10.4 A sample from each 2000-lb interval of continuous casting shall be tested. Each continuous cast bar from which the test bar was taken shall be identified should retesting be required. If all of the test bars from the initial sampling meet the requirements, the lot shall be acceptable.

10.4.1 The fractured bars shall be retained for chemical verification.

10.5 Tension test bar specimens shall be taken from continuous castings in accordance with Fig. 6 of Practice B 208.

11. Test Methods

11.1 Analytical chemical methods are given in Specification SB-824 (Section 13).

11.2 Brinell hardness reading shall be taken on the grip end of the tension test bar and shall be made in accordance with Test Method E 10 with the exception that a 3000-kg load shall be used.

11.3 Rockwell hardness reading shall be taken on the grip end of the tension test bar and shall be made in accordance with Test Methods E 18.

12. Certification

12.1 The certification requirements of Specification SB-824 are mandatory.

13. Product Marking

13.1 Castings shall be marked with the alloy number.

14. Keywords

14.1 continuous castings; copper alloy castings; copper-base alloy castings

APPENDIX

(Nonmandatory Information)

X1. METRIC EQUIVALENTS

X1.1 The SI unit for strength properties now shown is in accordance with the International System of Units (SI). The derived SI unit for force is the newton (N), which is defined as that force which when applied to a body having a mass of one kilogram gives it an acceleration of one meter per second squared ($N = kg \cdot m/s^2$). The derived SI unit for pressure or stress in the newton per square meter (N/m^2), which has been named the pascal (Pa) by the General Conference on Weights and Measures. Since 1 ksi = 6 894 757 Pa the metric equivalents are expressed as megapascal (MPa), which is the same as MN/m^2 and N/mm^2.

SPECIFICATION FOR NICKEL-IRON-CHROMIUM-SILICON ALLOY BARS AND SHAPES

SB-511

(Identical with ASTM Specification B 511-93.)

1. Scope

1.1 This specification covers wrought alloys UNS N08330 and UNS N08332 in the form of hot-finished and cold-finished bars and shapes intended for heat-resisting applications and general corrosive service.

1.2 The values stated in inch-pound units are to be regarded as the standard. The values given in parentheses are for information only.

2. Referenced Documents

2.1 *ASTM Standards:*

B 536 Specification for Nickel-Iron-Chromium-Silicon Alloys (UNS N08330 and N08332) Plate, Sheet, and Strip

E 8 Test Methods of Tension Testing of Metallic Materials

E 29 Practice for Using Significant Digits in Test Data to Determine Conformance with Specifications

E 38 Methods for Chemical Analysis of Nickel-Chromium and Nickel-Chromium-Iron Alloys

E 112 Test Methods for Determining the Average Grain Size

E 353 Test Methods for Chemical Analysis of Stainless, Heat-Resisting, Maraging, and Other Similar Chromium-Nickel-Iron Alloys

3. Terminology

3.1 *Descriptions of Terms Specific to this Standard:*

3.1.1 *bar* — material round, rectangular, hexagonal, octagonal, or square solid section, furnished in straight lengths.

3.1.2 *shapes* — material of solid section in such forms as angles, channels, tees, I-beams, and four-fluted bars.

4. Ordering Information

4.1 Orders for material to this specification shall include information with respect to the following:

4.1.1 Alloy (Table 2),

4.1.2 Quantity (weight or number of pieces),

4.1.3 ASTM designation and year of issue,

4.1.4 Section (round, square, I-beam, etc.),

4.1.5 Dimension, including length,

4.1.6 *Certification* — State if certification is required.

4.1.7 *Samples for Product (Check) Analysis* — State whether samples for product (check) analysis shall be furnished.

4.1.8 *Purchaser Inspection* — If a purchaser wishes to witness tests or inspections of material at the place of manufacture, the purchase order must so state indicating which tests or inspections are to be witnessed.

5. Materials and Manufacture

5.1 All material shall be furnished in the heat-treated condition, except that cold-drawn hexagons may be given a cold-draw sizing pass subsequent to the final heat treatment.

NOTE — Hot-finished rectangular bar in widths 10 in. (254 mm) and under may be furnished as hot-finished plate with sheared or cut edges in accordance with Specification B 536.

TABLE 1
CHEMICAL REQUIREMENTS

Element	Composition Limits, %	Product (Check) Analysis Variations, under min or over max of the Specified Limit of Element
C	. . .[A]	0.01
Mn	2.00 max	0.04
P	0.03 max	0.005
S	0.03 max	0.005
Si	0.75–1.50	0.05 under; 0.10 over
Cr	17.0–20.0	0.25
Ni	34.0–37.0	0.30
Cu	1.00 max	0.04
Pb	0.005 max	. . .
Sn	0.025 max	. . .
Fe	Remainder[B]	. . .

[A] Alloy UNS N08330: 0.08 max.
Alloy UNS N08332: 0.05–0.10.
[B] Element shall be determined arithmetically by difference.

6. Chemical Composition

6.1 The material shall conform to the requirements as to chemical composition specified in Table 1.

6.2 If a product (check) analysis is performed by the purchaser, the material shall conform to the product (check) analysis variations in Table 1.

7. Mechanical and Other Properties

7.1 The mechanical properties of the material at room temperature shall conform to those shown in Table 2.

7.2 *Grain Size* — Annealed alloy UNS N08332 shall conform to an average grain size of ASTM No. 5 or coarser.

7.3 *Annealing Temperature* — Alloy UNS N08330 shall be annealed at 1900°F (1040°C) minimum. Alloy UNS N08332 shall be annealed at 2100°F (1150°C) minimum.

8. Dimensions and Permissible Variations

8.1 All bars and shapes shall conform to the permissible variations in dimensions specified in Tables 3 to 14, inclusive.

9. Workmanship, Finish, and Appearance

9.1 The material shall be uniform in quality and temper, smooth, commercially straight, and free of injurious imperfections.

TABLE 2
MECHANICAL PROPERTIES

Alloy	Condition	Tensile Strength, min, psi (MPa)	Yield Strength, 0.2% Offset, min, psi (MPa)	Elongation in 2 in. or 50 mm, or 4*D*, min, %
UNS N08330	Annealed	70,000 (483)	30,000 (207)	30
UNS N08332	Annealed	67,000 (462)	27,000 (186)	30

10. Sampling

10.1 *Lot Definition:*

10.1.1 A lot for chemical analysis shall consist of one heat.

10.1.2 A lot for mechanical properties and grain size testing shall consist of material from one heat of the same condition and cross section, and in no case more than 30 000 lb (13 600 kg) in weight.

10.2 *Test Material Selection:*

10.2.1 *Chemical Analysis* — Representative samples from each lot shall be taken during pouring or subsequent processing.

10.2.1.1 Product (check) analysis shall be wholly the responsibility of the purchaser.

10.2.2 *Mechanical Properties and Grain Size* — Samples of the material to provide test specimens for mechanical properties and grain size shall be taken from such locations in each lot as to be representative of that lot.

11. Number of Tests

11.1 *Chemical Analysis* — One test per lot.

11.2 *Grain Size* — One test per lot.

11.3 *Mechanical Properties* — One test per lot.

12. Specimen Preparation

12.1 Tension test specimens shall be taken from material in the final condition and tested in the direction of fabrication.

12.1.1 All material shall be tested in full cross-section size when possible. When a full cross-section size test cannot be performed, the largest possible round specimen shown in Test Methods E 8 shall be used. Longitudinal strip specimens shall be prepared in accordance with Test Methods E 8 for rectangular bar up to

TABLE 3
PERMISSIBLE VARIATIONS IN SIZE OF HOT-ROLLED ROUND AND SQUARE BARS

Specified Size		Size Tolerance				Out-of-Round (Note 1) or Out-of-Square Section (Note 2)	
		Over		Under			
in.	mm	in.	mm	in.	mm	in.	mm
1/4 to 5/16	6.4 to 7.9	0.005	0.13	0.005	0.13	0.008	0.20
Over 5/16 to 7/16	7.9 to 11.1	0.006	0.15	0.006	0.15	0.009	0.23
Over 7/16 to 5/8	11.1 to 15.9	0.007	0.18	0.007	0.18	0.010	0.25
Over 5/8 to 7/8	15.9 to 22.2	0.008	0.20	0.008	0.20	0.012	0.30
Over 7/8 to 1	22.2 to 25.4	0.009	0.23	0.009	0.23	0.013	0.33
Over 1 to 1 1/8	25.4 to 28.6	0.010	0.25	0.010	0.25	0.015	0.38
Over 1 1/8 to 1 1/4	28.6 to 31.8	0.011	0.28	0.011	0.28	0.016	0.41
Over 1 1/4 to 1 3/8	31.8 to 34.9	0.012	0.30	0.012	0.30	0.018	0.46
Over 1 3/8 to 1 1/2	34.9 to 38.1	0.014	0.36	0.014	0.36	0.021	0.53
Over 1 1/2 to 2	38.1 to 50.8	1/64	0.4	1/64	0.4	0.023	0.58
Over 2 to 2 1/2	50.8 to 63.5	1/32	0.8	0		0.023	0.58
Over 2 1/2 to 3 1/2	63.5 to 88.9	3/64	1.2	0		0.035	0.89
Over 3 1/2 to 4 1/2	88.9 to 114.3	1/16	1.6	0		0.046	1.17
Over 4 1/2 to 5 1/2	114.3 to 139.7	5/64	2.0	0		0.058	1.47
Over 5 1/2 to 6 1/2	139.7 to 165.1	1/8	3.2	0		0.070	1.78
Over 6 1/2 to 8	165.1 to 203.2	5/32	4.0	0		0.085	2.16

NOTE 1 — Out-of-round is the difference between the maximum and minimum diameters of the bar, measured at the same cross section.

NOTE 2 — Out-of-square section is the difference in the two dimensions at the same cross section of a square bar, each dimension being the distance between opposite faces.

NOTE 3 — Size tolerances for rounds in the size range from 1/4 to 5/16 in. (6.4 to 7.9 mm), incl, and for rounds in the size range from 1/4 in. (6.4 mm) to approximate 5/8 in. (15.9 mm), which are produced on rod mills in coils, are not shown herein.

NOTE 4 — Variations in size of coiled product made on rod mills are greater than size tolerances for product made on bar mills.

TABLE 4
PERMISSIBLE VARIATIONS IN SIZE OF HOT-ROLLED HEXAGONAL AND OCTAGONAL BARS

Specified Sizes Measured Between Opposite Sides		Size Tolerance				Maximum Difference Measurements for Hexagons Only	
		Over		Under			
in.	mm	in.	mm	in.	mm	in.	mm
1/2 to 1, incl	12.7 to 25.4	0.010	0.25	0.010	0.25	0.015	0.38
Over 1 to 1 1/2, incl	25.4 to 38.1	0.021	0.53	0.021	0.53	0.025	0.64
Over 1 1/2 to 2, incl	38.1 to 50.8	1/32	0.8	1/32	0.8	1/32	0.8
Over 2 to 2 1/2, incl	50.8 to 63.5	3/64	1.2	3/64	1.2	3/64	1.2
Over 2 1/2 to 3 1/2, incl	63.5 to 88.9	1/16	1.6	1/16	1.6	1/16	1.6

1/2 in. (12.7 mm) inclusive, in thicknesses that are too wide to be pulled full size.

13. Test Methods

13.1 *Chemical Composition* — In case of dispute, the chemical analysis shall be made in accordance with Test Methods E 353 except Methods E 38 are to be used for elements not covered by Test Methods E 353.

13.2 *Grain Size* — The measurement of average grain size may be carried out by the planimetric method, the comparison method, or the intercept method described in Methods E 112. In case of dispute the "referee" method for determining average grain size shall be the planimetric method.

13.3 *Tension Test* — Test Methods E 8.

13.4 *Rounding Method* — For purposes of determining compliance with the limits in this specification, an observed value or a calculated value shall be rounded as indicated below, in accordance with the rounding method of Practice E 29:

TABLE 5
PERMISSIBLE VARIATIONS IN THICKNESS AND WIDTH FOR HOT-ROLLED FLAT BARS

	Thickness Tolerances, in., for Given Thickness										
	1/8 to 1/2, incl	Over 1/2 to 1, incl	Over 1 to 2, incl	Over 2 to 4, incl		Over 4 to 6, incl		Over 6 to 8, incl		Width Tolerance	
Specified Widths, in.	Over and Under			Over	Under	Over	Under	Over	Under	Over	Under
To 1, incl	0.008	0.010	...	...	...	...	...	...	...	0.015	0.015
Over 1 to 2, incl	0.012	0.015	0.031	...	...	...	...	...	...	0.031	0.031
Over 2 to 4, incl	0.015	0.020	0.031	0.062	0.031	...	...	...	...	0.062	0.031
Over 4 to 6, incl	0.015	0.020	0.031	0.062	0.031	0.093	0.062	...	...	0.093	0.062
Over 6 to 8, incl	0.016	0.025	0.031	0.062	0.031	0.093	0.062	0.125	0.156	0.125	0.156
Over 8 to 10, incl	0.021	0.031	0.031	0.062	0.031	0.093	0.062	0.125	0.156	0.156	0.187

	Thickness Tolerances, mm, for Given Thickness										
	3.2 to 12.7, incl	Over 12.7 to 25.4, incl	Over 25.4 to 50.8, incl	Over 50.8 to 101.6, incl		Over 101.6 to 152.4, incl		Over 152.4 to 203.2, incl		Width Tolerance	
	Over and Under			Over	Under	Over	Under	Over	Under	Over	Under
To 25.4, incl	0.20	0.25	...	...	...	...	...	...	...	0.38	0.38
25.4 to 50.8, incl	0.31	0.38	0.80	...	...	...	...	...	...	0.80	0.80
50.8 to 101.6, incl	0.38	0.51	0.80	1.58	0.80	...	...	...	...	1.58	0.80
101.6 to 152.4, incl	0.38	0.51	0.80	1.58	0.80	2.36	1.58	...	...	2.36	1.58
152.4 to 203.2, incl	0.41	0.64	0.80	1.58	0.80	2.36	1.58	3.18	3.96	3.18	3.96
203.2 to 254.0, incl	0.53	0.80	0.80	1.58	0.80	2.36	1.58	3.18	3.96	3.96	4.75

TABLE 6
PERMISSIBLE VARIATIONS IN SIZE OF COLD-FINISHED ROUND BARS

Specified Size		Size Tolerance (Note 1)			
		Over		Under	
in.	mm	in.	mm	in.	mm
Over 1/2 to 1, incl	12.7 to 25.4	0.002	0.05	0.002	0.05
1 to 1 1/2, incl	25.4 to 38.1	0.0025	0.06	0.0025	0.06
1 1/2 to 4, incl (Note 3)	38.1 to 101.6	0.003	0.08	0.003	0.08

NOTE 1 — Size tolerances are over and under as shown in the table. Also, rounds can be produced to tolerances all over and nothing under, or all under and nothing over, or any combination of over and under, if the total spread in size tolerance for a specified size is not less than the total spread shown in the table.

NOTE 2 — When it is necessary to heat treat or heat treat and pickle after cold finishing, size tolerances are double those shown in the table.

NOTE 3 — Cold-finished bars over 4 in. (102 mm) in diameter are produced; size tolerances for such bars are not included herein.

TABLE 7
PERMISSIBLE VARIATIONS IN SIZE OF COLD-FINISHED HEXAGONAL, OCTAGONAL, AND SQUARE BARS

Specified Size		Permissible Variations from Specified Size		
			Under	
in.	mm	Over	in.	mm
Over 1/2 to 1, incl	12.7 to 25.4	0	0.004	0.10
Over 1 to 2, incl	25.4 to 50.8	0	0.006	0.15
Over 2 to 4, incl	50.8 to 101.2	0	0.008	0.20
Over 4	101.2	0	0.010	0.25

NOTE — When it is necessary to heat treat or heat treat and pickle after cold finishing, size tolerances are double those shown in the table.

TABLE 8
PERMISSIBLE VARIATIONS IN WIDTH AND THICKNESS OF COLD-FINISHED FLAT BARS

Width		Width Tolerance (Note 1), Over and Under			
		For Thicknesses 1/4 in. (6.4 mm) and Under		For Thicknesses over 1/4 in. (6.4 mm)	
in.	mm	in.	mm	in.	mm
3/8 to 1, incl	9.5 to 25.4	0.004	0.10	0.002	0.05
Over 1 to 2, incl	25.4 to 50.8	0.006	0.15	0.003	0.08
Over 2 to 3, incl	50.8 to 76.2	0.008	0.20	0.004	0.10
Over 3 to 4 1/2, incl	76.2 to 114.3	0.010	0.25	0.005	0.13

Thickness		Thickness Tolerance, (Note 1) Over and Under	
in.	mm	in.	mm
1/8 to 1, incl	3.18 to 25.4	0.002	0.05
Over 1 to 2, incl	25.4 to 50.8	0.003	0.08
Over 2 to 3, incl	50.8 to 76.2	0.004	0.10
Over 3 to 4 1/2, incl	76.2 to 114.3	0.005	0.13

NOTE 1 — When it is necessary to heat treat or heat treat and pickle after cold finishing, tolerances are double-those shown in the table.
NOTE 2 — Cold-finished flat bars over 4 1/2 in. (114.3 mm) wide or thick are produced: width and thickness tolerances for such bars are not included herein.

TABLE 9
PERMISSIBLE VARIATIONS IN LENGTH OF HOT FINISHED OR COLD FINISHED BARS

Specified Sizes of Rounds, Squares, Hexagons, Octagons and Widths of Flats,[A] in. (mm)		Permissible Variations in Length, in. (mm)			
		To 12 ft (3.66 m), incl		Over 12 to 25 ft (3.66 to 7.62 m), incl	
		Over	Under	Over	Under
To 2, incl	51	1/2 (12.7)	0	3/4 (19.1)	0
Over 2 to 4, incl	51 to 102	3/4 (19.1)	0	1 (25.4)	0
Over 4 to 6, incl	102 to 152	1 (25.4)	0	1 1/4 (31.8)	0
Over 6 to 9, incl	152 to 229	1 1/4 (31.8)	0	1 1/2 (38.1)	0
Over 9 to 10, incl	229 to 254	1 1/2 (38.1)	0	2 (50.8)	0

NOTE — Tolerances in this table apply when specific lengths are ordered. When random lengths are ordered, the length range is not less than 24 in. (610 mm).

[A] The maximum width of bar flats is 10 in. (254 mm).

TABLE 10
PERMISSIBLE VARIATIONS IN LENGTH OF HOT FINISHED OR COLD FINISHED BARS MACHINE-CUT AFTER MACHINE STRAIGHTENING

Specified Sizes of Rounds, Squares, Hexagons, Octagons and Widths of Flats,[A] in. (mm)		Permissible Variations in Length, in. (mm)			
		To 12 ft (3.66 m), incl		Over 12 to 25 ft (3.66 to 7.62 m), incl	
		Over	Under	Over	Under
To 3, incl	76.2	1/8 (3.2)	0	3/16 (4.8)	0
Over 3 to 6, incl	76.2 to 152.4	3/16 (4.8)	0	1/4 (6.4)	0
Over 6 to 9, incl	152.4 to 228.6	1/4 (6.4)	0	5/16 (7.9)	0
Over 9 to 12, incl	228.6 to 304.8	1/2 (12.7)	0	1/2 (12.7)	0

NOTE — Tolerances in this table apply when specific lengths are ordered. When random lengths are ordered, the length range is not less than 24 in. (610 mm).

[A] The maximum width of bar flats is 10 in. (254 mm).

Requirements	Rounded Unit for Observed or Calculated Value
Chemical composition and tolerances (when expressed in decimals)	nearest unit in the right-hand place of figures of the specified limit. If two choices are possible, as when the digits dropped are exactly a 5 or a 5 followed only by zeros, choose the one ending in an even digit with zero defined as an even digit.
Tensile strength and yield strength	nearest 1000 psi (6.9 MPa)
Elongation	nearest 1%
Grain size	
0.024 in. (0.060 mm) or larger	nearest multiple of 0.0002 in. (0.005 mm)
Less than 0.0024 in. (0.060 mm)	nearest multiple of 0.0001 in. (0.002 mm)

TABLE 11
DIMENSIONAL TOLERANCES—HOT EXTRUSIONS

Largest Section Dimension, in. (mm)	Tolerance, ±, in. (mm)
Under 1 (25.40)	0.020 (0.51)
1 (25.40) to 3 (76.20), excl	0.031 (0.79)

TABLE 12
ANGULARITY TOLERANCE—HOT EXTRUSIONS

	Tolerance, ±, °
Specified angle or angles	2

TABLE 13
LENGTH TOLERANCES FOR SHAPES AND HOT EXTRUSIONS SPECIFIED TO EXACT LENGTHS, MACHINE CUT AFTER STRAIGHTENING

Largest Sectional Dimension, in. (mm)	Length Tolerance, in. (mm)	
	Over	Under
Up to 3 (76.2), excl	1/4 (6.4)	0

14. Inspection

14.1 Inspection of the material by the purchaser shall be as agreed upon between the purchaser and the supplier as part of the purchase contract.

15. Rejection and Rehearing

15.1 Material that fails to conform to the requirements of this specification may be rejected. Rejection should be reported to the producer or supplier promptly and in writing. In case of dissatisfaction with the results of the test, the producer or supplier may make claim for a rehearing.

16. Certification

16.1 When specified in the purchase order or contract, a producer's or supplier's certification shall be furnished

to the purchaser that the material was manufactured, sampled, tested, and inspected in accordance with this specification and has been found to meet the requirements. When specified in the purchase order or contract, a report of the test results shall be furnished.

17. Packaging and Package Marking

17.1 Material shall be bundled or boxed in such a manner as to assure undamaged delivery to its destination when properly transported by a common carrier.

17.2 Each bundle or shipping container shall be marked with the name of the material or UNS number, heat number, condition (temper), this specification number, the size, gross, and net weight, consignor and consignee address, and contract or order number.

TABLE 14
PERMISSIBLE VARIATIONS IN STRAIGHTNESS (CAMBER) OF HOT-FINISHED BARS, HOT EXTRUSIONS AND COLD-FINISHED BARS

Hot-finished bar and hot extrusions:
$^1/_8$ in. (3.2 mm) in any 5 ft (1.5 m), but may not exceed ($^1/_8$ × No. of feet in length)/5
2.1 mm × No. of metres in length
Cold-finished bars:
$^1/_{16}$ in. (1.6 mm) in any 5 ft (1.5 m) but may not exceed ($^1/_{16}$ × No. of feet in length)/5
1.05 mm × No. of metres in length

NOTE — Measurement is taken on the concave side of the bar with a straightedge and represents the greatest deviation of the side from a straight line.

SPECIFICATION FOR WELDED NICKEL-IRON-CHROMIUM ALLOY PIPE

SB-514

(Identical with ASTM Specification B 514-95, except that certification has been made mandatory.)

1. Scope

1.1 This specification covers nickel-iron-chromium alloys in the form of welded, cold-worked, and annealed pipe for general corrosive service and heat-resisting applications. These products are furnished in three alloys: UNS N08120, UNS N08800, and UNS N08810. Alloy UNS N08800 is employed normally in service temperatures up to and including 1100°F (593°C). Alloys UNS N08120 and UNS N08810 are employed normally in service temperatures above 1100°F where resistance to creep and rupture is required, and they are annealed to develop controlled grain size for optimum properties in this temperature range.

1.2 This specification covers outside diameter and nominal wall pipe shown in ANSI B36.19. Pipe having other dimensions may be furnished provided such pipe complies with all other requirements of the specification.

1.3 The values stated in inch-pound units are to be regarded as the standard.

2. Referenced Documents

2.1 *ASTM Standard:*

B 775 Specification for General Requirements for Nickel and Nickel Alloy Seamless and Welded Pipe

2.2 *ANSI Standard:*

B36.19 Stainless Steel Pipe

3. General Requirement

3.1 Material furnished in accordance with this specification shall conform to the applicable requirements of the current edition of Specification B 775 unless otherwise provided herein.

TABLE 1
MECHANICAL PROPERTY REQUIREMENTS

Alloy	Condition (Temper)	Tensile Strength, min, psi (MPa)	Yield Strength, 0.2% Offset, min, psi (MPa)	Elongation in 2 in. or 50 mm, min, %
UNS N08120	Annealed	90,000 (621)	40,000 (276)	30
UNS N08800	Annealed	75,000 (520)	30,000 (207)	30
UNS N08810	Annealed	65,000 (450)	25,000 (170)	30

4. Ordering Information

4.1 Orders for material under this specification should include the following information:

4.1.1 Alloy name or UNS number.

4.1.2 ASTM designation and year of issue.

4.1.3 Condition (temper) (Table 1).

4.1.4 *Dimensions:*

4.1.4.1 Nominal pipe size or outside diameter and schedule number or nominal wall thickness.

4.1.4.2 Length (specific or random).

4.1.5 Quantity (feet or metres, or number of pieces).

4.1.6 *Certification* — Certification and a report of test results are required.

4.1.7 *Samples for Product (Check) Analysis* — State whether samples for product (check) analysis should be furnished.

4.1.8 *Purchaser Inspection* — If the purchaser wishes to witness tests or inspection of material at the

TABLE 2
CHEMICAL REQUIREMENTS

Element	Composition Limits, % Alloy N08120	Alloys N08800 and N08810
Nickel	35.0 min	30.0 min
	39.0 max	35.0 max
Chromium	23.0 min	19.0 min
	27.0 max	23.0 max
Iron	remainder	39.5 min[A]
Manganese, max	1.5	1.5
Carbon	0.02 min	[B]
	0.10 max	...
Copper, max	0.50 max	0.75
Silicon, max	1.0	1.0
Sulfur, max	0.03	0.015
Aluminum	0.40 max	0.15 min
	...	0.60 max
Titanium	0.20 max	0.15 min
	...	0.60 max
Columbium	0.4 min	...
	0.9 max	...
Molybdenum	2.50 max	...
Phosphorus	0.040 max	...
Tungsten	2.50 max	...
Cobalt, max	3.0	...
Nitrogen	0.15 min	...
	0.30 max	...
Boron	0.010 max	...

[A] Iron shall be determined arithmetically by difference.
[B] Alloy UNS N08800: 0.10 max. Alloy UNS N08810: 0.05 to 0.10.

place of manufacture, the purchase order must so state indicating which tests or inspections are to be witnessed.

5. Materials and Manufacture

5.1 Pipe shall be made from flat-rolled alloy by an automatic welding process with no addition of filler metal. Subsequent to welding and prior to final solution treatment, the material shall be cold worked either in both weld and base metal or in weld metal only.

5.2 Pipe shall be furnished with a scale-free finish. When bright annealing is used, descaling is not necessary.

6. Chemical Composition

6.1 The material shall conform to the requirements as to chemical composition prescribed in Table 2.

6.2 If a product (check) analysis is performed by the purchaser, the material shall conform to the product (check) analysis variations in Table 1 of Specification B 775.

7. Mechanical and Other Requirements

7.1 *Mechanical Properties* — The material shall conform to the requirements for mechanical properties prescribed in Table 1.

7.2 *Grain Size* — A transverse sample representing the full-wall thickness of annealed alloys UNS N08120 and UNS N08810 shall conform to an average grain size of ASTM No. 5 or coarser.

7.3 *Flattening Test* — Pipe shall be capable of withstanding, without cracking, flattening under a load applied gradually at room temperature until the distance between the platens is five times the wall thickness. The weld shall be positioned 90 deg from the direction of the applied flattening force.

7.4 *Annealing Temperature* — Alloy UNS N08120 shall be annealed at 2150°F (1177°C) minimum, and alloy UNS N08810 shall be annealed at 2050°F (1120°C) minimum.

7.5 *Nondestructive Test Requirements:*

7.5.1 *Category 1* — Each piece of each lot shall be subject to one of the following four tests: hydrostatic, pneumatic (air underwater), eddy current, or ultrasonic.

7.5.2 *Category 2* — Each piece in each lot shall be subjected to a leak test and an electric test as follows:

7.5.2.1 *Leak Test* — Hydrostatic or pneumatic (air underwater).

7.5.2.2 *Electric Test* — Eddy current or ultrasonic.

7.6 The manufacturer shall have the option to test Category 1 or Category 2 and select the nondestructive test methods, if not specified by the purchaser.

8. Number of Tests

8.1 *Chemical Analysis* — One per lot.

8.2 *Mechanical Properties* — One test per lot.

8.3 *Flattening* — One test per lot.

8.4 *Grain Size* — One test per lot.

8.5 *Nondestructive* — Each piece in each lot.

9. Certification

9.1 A manufacturer's certification shall be furnished to the purchaser stating that the material has been manufactured, tested, and inspected in accordance with this

specification, and that the test results on representative samples meet specification requirements. A report of the test results shall be furnished.

10. Keywords

10.1 UNS N08120; UNS N08800; UNS N08810; welded pipe

SPECIFICATION FOR WELDED UNS N08120, UNS N08800, UNS N08810, AND UNS N08811 ALLOY TUBES

SB-515

(Identical with ASTM Specification B 515-95, except that certification has been made mandatory.)

1. Scope

1.1 This specification covers welded UNS N08120, UNS N08800, UNS N08810, and UNS N08811 alloy boiler, heat exchanger, and condenser tubes for general corrosion resisting and low or high-temperature service.

1.2 This specification covers tubes $\frac{1}{8}$ to 5 in. (3.18 to 127 mm), inclusive, in outside diameter and 0.015 to 0.500 in. (0.38 to 12.70 mm), inclusive, in wall thickness. Table 2 of Specification B 751 lists the dimensional requirements of these sizes. Tubes having other dimensions may be furnished provided such tubing complies with all other requirements of this specification.

1.3 The values stated in inch-pound units are to be regarded as the standard. The SI units given in parentheses are for information only.

2. Referenced Documents

2.1 *ASTM Standard:*

B 751 Specification for General Requirements for Nickel and Nickel Alloy Seamless and Welded Tube

3. Ordering Information

3.1 Orders for material to this specification should include the following information:

3.1.1 *Quantity* (feet or number of lengths),

3.1.2 *UNS Number,*

3.1.3 *Size* (outside diameter minimum or average wall thickness),

3.1.4 *Length* (random or specific),

3.1.5 *Class,*

3.1.6 *ASTM Designation,*

3.1.7 *Product Analysis* — State if required,

3.1.8 *Certification* — Certification and a report of test results are required, and

3.1.9 *Purchaser Inspection* — State which tests or inspections are to be witnessed, if any.

4. Materials and Manufacture

4.1 Tube shall be made from flat-rolled alloy by an automatic welding process with no addition or filler metal. Subsequent to welding and prior to final annealing, the material shall be cold-worked in either the weld metal only or both weld and base metal.

4.2 Tube shall be furnished with oxide removed. When bright annealing is used, descaling is not necessary.

5. Chemical Composition

5.1 The material shall conform to the composition limits specified in Table 1. One test is required for each lot as defined in Specification B 751.

5.2 If a product analysis is performed, it shall meet the chemistry limits prescribed in Table 1, subject to the analysis tolerances specified in Table 6 of Specification B 751.

6. Mechanical and Other Properties

6.1 *Mechanical Properties* — The material shall conform to the requirements for mechanical properties prescribed in Table 2. One test is required for each lot as defined in Specification B 751.

6.2 *Grain Size* — A transverse sample representing the full-wall thickness of annealed alloys UNS N08120, UNS N08810, and UNS N08811 shall conform to an average grain size of ASTM No. 5 or coarser.

TABLE 1
CHEMICAL REQUIREMENTS

Element	Composition Limits, %			
	Alloy N08120	Alloy N08800	Alloy N08810	Alloy N08811
Nickel, min	35.0	30.0	30.0	30.0
Nickel, max	39.0	35.0	35.0	35.0
Chromium, min	23.0	19.0	19.0	19.0
Chromium, max	27.0	23.0	23.0	23.0
Iron, min	remainder	39.5[A]	39.5[A]	39.5[A]
Manganese, max	1.5	1.5	1.5	1.5
Carbon, min	0.02	...	...	...
Carbon, max	0.10	0.10	0.05 to 0.10	0.06 to 0.10
Copper, max	0.50	0.75	0.75	0.75
Silicon, max	1.0	1.0	1.0	1.0
Sulfur, max	0.03	0.015	0.015	0.015
Aluminum, min[B]	...	0.15	0.15	0.15
Aluminum, max	0.40	0.60	0.60	0.60
Titanium, min[B]	...	0.15	0.15	0.15
Titanium, max	0.20	0.60	0.60	0.60
Columbium, min	0.4	...	...	...
Columbium, max	0.9	...	...	...
Molybdenum, max	2.50	...	...	...
Phosphorus, max	0.040	...	...	...
Tungsten, max	2.50	...	...	...
Cobalt, max	3.0	...	...	...
Nitrogen, min	0.15	...	...	...
Nitrogen, max	0.30	...	...	...
Boron, max	0.010	...	...	...

[A] Iron shall be determined arithmetically by difference.
[B] Alloy UNS N08811: Al + Ti, 0.85–1.20.

TABLE 2
MECHANICAL PROPERTY REQUIREMENTS

Alloy	Condition (Temper)	Tensile Strength, min, psi (MPa)	Yield Strength, 0.2% Offset, min, psi (MPa)	Elongation in 2 in. or 50 mm, min, %
UNS N08120	Annealed	90,000 (621)	40,000 (276)	30
UNS N08800	Annealed	75,000 (520)	30,000 (205)	30
UNS N08810 and UNS N08811	Annealed	65,000 (450)	25,000 (170)	30

6.3 *Flattening Test* — A flattening test shall be made on each end of one tube per lot. Superficial ruptures resulting from surface imperfections shall not be cause for rejection.

6.4 *Flange Test* — A flange test shall be made on each end of one tube per lot.

6.5 *Nondestructive Test Requirements:*

6.5.1 *Class 1* — Each piece of each lot shall be subject to one of the following four tests: hydrostatic, pneumatic (air underwater), eddy current, or ultrasonic.

6.5.2 *Class 2* — Each piece in each lot shall be subjected to a leak test and an electric test as follows:

6.5.2.1 *Leak Test* — Hydrostatic or pneumatic (air underwater).

6.5.2.2 *Electric Test* — Eddy current or ultrasonic.

6.6 The manufacturer shall have the option to test Class 1 or Class 2 and select the nondestructive test methods, if not specified by the purchaser.

7. General Requirements

7.1 Material furnished under this specification shall conform to the applicable requirements of the current

edition of Specification B 751 unless otherwise provided herein.

8. Certification

8.1 A manufacturer's certification shall be furnished to the purchaser stating that the material has been manufactured, tested, and inspected in accordance with this specification, and that the test results on representative samples meet specification requirements. A report of the test results shall be furnished.

9. Keywords

9.1 UNS N08120; UNS N08800; UNS N08810; UNS N08811; welded tube

SPECIFICATION FOR WELDED NICKEL-CHROMIUM-IRON ALLOY (UNS N06600), UNS N06025, AND UNS N06045 TUBES

SB-516

(Identical with ASTM Specification B 516-95)

1. Scope

1.1 This specification covers welded UNS N06600, N06025, and N06045 alloy boiler, heat exchanger, and condenser tubes for general corrosion resisting and low or high temperature service.

1.2 This specification covers tubes $\frac{1}{8}$ to 5 in. (3.18 to 127 mm), inclusive, in outside diameter and 0.015 to 0.500 in. (0.38 to 12.70 mm), inclusive, in wall thickness. Table 2 of Specification SB-751 lists the dimensional requirements of these sizes. Tubes having other dimensions may be furnished provided such tubing complies with all other requirements of this specification.

1.3 The values stated in inch-pound units are to be regarded as the standard. The values given in parentheses are for information only.

2. Referenced Documents

2.1 *ASTM Standard*

B 751 Specification for General Requirements for Nickel and Nickel Alloy Welded Tube

3. General Requirements

3.1 Material furnished under this specification shall conform to the applicable requirements of the current edition of Specification SB-751 unless otherwise provided herein.

4. Ordering Information

4.1 Orders for material to this specification should include the following information:

4.1.1 quantity (feet or number of lengths);

4.1.2 UNS number;

4.1.3 size (outside diameter minimum or average wall thickness);

4.1.4 length (random or specific);

4.1.5 class;

4.1.6 ASTM designation;

4.1.7 *Product Analysis* — State if required;

4.1.8 *Certification* — State if a certification or a report of test results is required; and

4.1.9 *Purchaser Inspection* — State which tests or inspections are to be witnessed, if any.

5. Material and Manufacture

5.1 Tube shall be made from flat-rolled alloy by an automatic welding process with no addition or filler metal. Subsequent to welding and prior to final annealing, the material shall be cold-worked in either the weld metal only or both weld and base metal.

5.2 Tube shall be furnished with oxide removed. When bright annealing is used, descaling is not necessary.

6. Chemical Composition

6.1 The material shall conform to the composition limits specified in Table 1. One test is required for each lot as defined in Specification SB-751.

6.2 If a product analysis is performed, it shall meet the chemistry limits prescribed in Table 1, subject to the

analysis tolerances specified in Table 2 of Specification SB-751.

7. Mechanical Properties and Other Requirements

7.1 *Mechanical Properties* — The material shall conform to the mechanical property requirements specified in Table 2. One test is required for each lot as defined in Specification SB-751.

7.2 *Flattening Test* — A flattening test shall be made on each end of one tube per lot. Superficial ruptures resulting from surface imperfections shall not be cause for rejection.

7.3 *Flange Test* — A flange test shall be made on each end of one tube per lot.

7.4 *Nondestructive Test Requirements*

7.4.1 *Class 1* — Each piece in each lot shall be subject to one of the following four tests: hydrostatic, pneumatic (air underwater), eddy current, or ultrasonic.

7.4.2 *Class 2* — Each piece in each lot shall be subjected to a leak test and an electric test as follows:

7.4.2.1 *Leak Test* — hydrostatic or pneumatic (air underwater)

7.4.2.2 *Electric Test* — eddy current or ultrasonic

7.5 The manufacturer shall have the option to test to Class 1 or Class 2 and select the nondestructive test methods, if not specified by the purchaser.

8. Keywords

8.1 welded tube; N06600; N06025; N06045

TABLE 1
CHEMICAL REQUIREMENTS

Element	Composition Limits, %		
	N06600	N06025	N06045
Nickel [Note (1)]	72.0 min	Bal	45.0 min
Chromium	14.0 min 17.0 max	24.0–26.0	26.0–29.0
Iron	6.0 min 10.0 max	8.0–11.0	21.0–25.0
Manganese	1.0	0.15 max	1.0 max
Carbon	0.15 max	0.15–0.25	0.05–0.12
Copper	0.5 max	0.10 max	0.3 max
Silicon	0.5 max	0.5 max	2.5–3.0
Sulfur	0.015 max	0.010 max	0.010 max
Aluminum	...	1.8–2.4	...
Titanium	...	0.1–0.2	...
Phosphorus	...	0.02 max	0.02 max
Zirconium	...	0.01–0.10	...
Yttrium	...	0.05–0.12	...
Cerium	...	...	0.03–0.09

NOTE:
(1) Nickel shall be determined arithmetically by difference.

TABLE 2 MECHANICAL PROPERTY REQUIREMENTS

Alloy	Tensile Strength min, psi (MPa)	Yield Strength 0.2% Offset, min, psi (MPa)	Elongation in 2 in. or 50 mm, min, %
N06600	80,000 (550)	35,000 (240)	30
N06025	94,000 (650)	43,000 (300)	30
N06045	90,000 (620)	35,000 (240)	30

SPECIFICATION FOR WELDED NICKEL-CHROMIUM-IRON ALLOY (UNS N06600, UNS N06603, UNS N06025, AND UNS N06045) PIPE

SB-517

(Identical with ASTM Specification B 517-98 except Table 1 was corrected, certification has been made mandatory, and other editorial changes have been made.)

1. Scope

1.1 This specification covers welded, cold-worked, and annealed nickel-chromium-iron alloy (UNS N06600, N06603, N06025, and N06045) pipe for general corrosive service and heat-resisting applications.

1.2 This specification covers outside diameter and nominal wall pipe shown in ANSI B36.19. Pipe having other dimensions may be furnished provided such pipe complies with all other requirements of this specification.

1.3 The values stated in inch-pound units are to be regarded as the standard.

2. Referenced Documents

2.1 *ASTM Standard*

B 775 Specification for General Requirements for Nickel and Nickel Alloy Welded Pipe

2.2 *ANSI Standard*

B36.19 Stainless Steel Pipe

3. General Requirement

3.1 Material furnished in accordance with this specification shall conform to the applicable requirements of the current edition of Specification SB-775 unless otherwise provided herein.

4. Ordering Information

4.1 It is the responsibility of the purchaser to specify all requirements that are necessary for the safe and satisfactory performance of material ordered under this specification. Examples of such requirements include, but are not limited to, the following:

4.1.1 Alloy name or UNS number.

4.1.2 ASTM designation and year of issue.

4.1.3 Condition (temper).

4.1.4 *Dimensions:*

4.1.4.1 Nominal pipe size or outside diameter and schedule number or nominal wall thickness.

4.1.4.2 Length (specific or random).

4.1.5 Quantity (feet or meters, or number of pieces).

4.1.6 *Certification* — Certification and a report of test results are required.

4.1.7 *Samples for Product (Check) Analysis* — State whether samples for product (check) analysis should be furnished.

4.1.8 *Purchaser Inspection* — If the purchaser wishes to witness tests or inspection of material at the place of manufacture, the purchase order must so state indicating which tests or inspections are to be witnessed.

5. Materials and Manufacture

5.1 Pipe shall be made from flat-rolled alloy by an automatic welding process with no addition of filler metal. Subsequent to welding and prior to final heat treatment, the material shall be cold worked either in both weld and base metal or in weld metal only.

5.2 Pipe shall be furnished with a scale-free finish. When bright annealing is used, descaling is not necessary.

6. Chemical Composition

6.1 The material shall conform to the requirements as to chemical composition prescribed in Table 1.

TABLE 1
CHEMICAL REQUIREMENTS

Element	Composition Limits, % N06600	N06603	N06025	N06045	Product (Check) Analysis Variations, Under Min. or Over Max., of the Specified Limit of Element
Nickel[A]	72.0 min.	Bal	Bal	45.0 min.	0.45
Chromium	14.0 min.	24.0–26.0	24.0–26.0	26.0–29.0	0.15
	17.0 max.	...	...	...	0.25
Iron	6.0 min.	8.0–11.0	8.0–11.0	21.0–25.0	0.10
	10.0 max.	...	...	...	0.10
Manganese	1.0	0.15 max.	0.15 max.	1.0 max.	0.03
Carbon	0.15 max.	20.0–40.0	0.15–0.25	0.05–0.12	0.01
Copper	0.5 max.	0.50 max.	0.10 max.	0.3 max.	0.03
Silicon	0.5 max.	0.50 max.	0.5 max.	2.5–3.0	0.03
Sulfur	0.015 max	0.010 max.	0.010 max.	0.010 max.	0.003
Aluminum	...	2.4–3.0	1.8–2.4	...	...
Titanium	...	0.01–0.25	0.1–0.2	...	...
Phosphorus	...	0.020 max.	0.02 max.	0.02 max.	...
Zirconium	...	0.01–0.40	0.01–0.10	...	...
Yttrium	...	0.01–0.15	0.05–0.12	...	...
Cerium	...	...	...	0.03–0.09	...
Nitrogen	...	...	...	0.05–0.12	...

[A] Nickel shall be determined arithmetically by difference.

TABLE 2
MECHANICAL PROPERTY REQUIREMENTS

Alloy	Tensile Strength, Min., psi (MPa)	Yield Strength, 0.2% Offset, Min., psi (MPa)	Elongation in 2 in. or 50 mm, Min., %
N06600	80,000 (550)	35,000 (240)	30
N06603	94,000 (650)	43,000 (300)	25
N06025	98,000 (680)	39,000 (270)	30
N06045	90,000 (620)	35,000 (240)	30

6.2 If a product (check) analysis is performed by the purchaser, the material shall conform to the product (check) analysis variations in Table 1 of Specification SB-775.

7. Mechanical and Other Requirements

7.1 *Mechanical Properties* — The material shall conform to the requirements for mechanical properties prescribed in Table 2.

7.2 *Flattening Test* — Pipe shall be capable of withstanding, without cracking, flattening under a load applied gradually at room temperature until the distance between the platens is five times the wall thickness. The weld shall be positioned 90° from the direction of the applied flattening force.

7.3 *Nondestructive Test Requirements:*

7.3.1 *Category 1* — Each piece of each lot shall be subject to one of the following four tests: hydrostatic, pneumatic (air underwater), eddy current, or ultrasonic.

7.3.2 *Category 2* — Each piece in each lot shall be subjected to a leak test and an electric test as follows:

7.3.2.1 *Leak Test* — hydrostatic or pneumatic (air underwater), and

7.3.2.2 *Electric Test* — eddy current or ultrasonic.

7.4 The manufacturer shall have the option to test Category 1 or Category 2 and select the nondestructive test methods, if not specified by the purchaser.

8. Number of Tests

8.1 *Chemical Analysis* — One per lot.

8.2 *Mechanical Properties* — One test per lot.

8.3 *Flattening* — One test per lot.

8.4 *Nondestructive* — Each piece in each lot.

9. Keywords

9.1 welded pipe; N06600; N06603; N06025; N06045

SPECIFICATION FOR SEAMLESS AND WELDED ZIRCONIUM AND ZIRCONIUM ALLOY TUBES

SB-523/SB-523M

(Identical with ASTM Specification B 523/B 523M-01.)

1. Scope

1.1 This specification covers three grades of zirconium and zirconium alloy seamless and welded tubes.

1.2 Unless a single unit is used, for example corrosion mass gain in mg/dm^2, the values stated in either inch-pound or SI units are to be regarded separately as standard. The values stated in each system are not exact equivalents; therefore, each system must be used independently of the other. SI values cannot be mixed with inch-pound values.

1.3 The following precautionary caveat pertains only to the test methods portion of this specification: *This standard does not purport to address all of the safety concerns, if any, associated with its use. It is the responsibility of the user of this standard to establish appropriate safety and health practices and determine the applicability of regulatory limitations prior to use.*

2. Referenced Documents

2.1 *ASTM Standards:*

A 370 Test Methods and Definitions for Mechanical Testing of Steel Products

B 551 Specification for Zirconium and Zirconium Alloy Strip, Sheet, and Plate

E 8 Test Methods for Tension Testing of Metallic Materials

E 29 Practice for Using Significant Digits in Test Data to Determine Conformance with Specifications

E 213 Practice for Ultrasonic Examination of Metal Pipe and Tubing

E 426 Practice for Electromagnetic (Eddy-Current) Examination of Seamless and Welded Tubular Products, Austenitic Stainless Steel and Similar Alloys

3. Terminology

3.1 *Definitions of Terms Specific to This Standard:*

3.1.1 *annealed*— for purposes of this specification "annealed" denotes material that exhibits a recrystallized grain structure.

3.2 *Lot Definitions:*

3.2.1 *castings* — a lot shall consist of all castings produced from the same pour.

3.2.2 *ingot* — no definition required.

3.2.3 *rounds, flats, tubes, and wrought powder metallurgical products (single definition, common to nuclear and non-nuclear standards)* — a lot shall consist of a material of the same size, shape, condition, and finish produced from the same ingot or powder blend by the same reduction schedule and the same heat treatment parameters. Unless otherwise agreed between manufacturer and purchaser, a lot shall be limited to the product of an 8 h period for final continuous anneal, or to a single furnace load for final batch anneal.

3.2.4 *sponge* — a lot shall consist of a single blend produced at one time.

3.2.5 *weld fittings* — definition is to be mutually agreed upon between manufacturer and the purchaser.

4. Classification

4.1 The tubes are furnished in three grades as follows:

4.1.1 *Grade R60702* — Unalloyed zirconium.

4.1.2 *Grade R60704* — Zirconium-tin alloy.

4.1.3 *Grade R60705* — Zirconium-niobium alloy.

5. Ordering Information

5.1 Orders for material under this specification should include the following information:

TABLE 1
CHEMICAL REQUIREMENTS [A]

Element	Composition, % UNS Grade Designation R60702	R60704	R60705
Zirconium + hafnium, min[B]	99.2	97.5	95.5
Hafnium, max	4.5	4.5	4.5
Iron + chromiun	0.2 max	0.2 to 0.4	0.2 max
Tin	...	1.0 to 2.0	...
Hydrogen, max	0.005	0.005	0.005
Nitrogen, max	0.025	0.025	0.025
Carbon, max	0.05	0.05	0.05
Niobium	...	...	2.0 to 3.0
Oxygen, max	0.16	0.18	0.18

[A] By agreement between the purchaser and the manufacturer, analysis may be required and limits established for elements and compounds not specified in the table of chemical composition.

[B] The value for zirconium + hafnium, min, is a warranted but not a measured value.

5.1.1 Quantity (weight or number of pieces, or both),

5.1.2 Name of material (zirconium seamless or welded tube),

5.1.3 Dimensions (diameter, wall thickness, lengths),

5.1.4 ASTM designation and year of issue,

5.1.5 Grade number (see 4.1), and

5.1.6 Additions to the specification and supplementary requirements, if required.

NOTE 1 — A typical ordering description is as follows: 1000 pieces of seamless zirconium tubes, 2 in. (50 mm) in outside diameter by 0.06 in. (15 mm) in wall thickness by 10 ft (3 m) in length, ASTM B 523, dated ———, Grade R60702.

6. Materials and Manufacture

6.1 Seamless tube shall be made by any seamless method that will yield a product meeting the requirements of this specification.

6.2 Welded tube shall be made from sheet or strip meeting the requirements of Specification B 551 by an automatic arc-welding process or other method of welding that will yield a product meeting the requirements of this specification. Filler metal shall not be used. Welded tubing shall be supplied as follows:

6.2.1 As welded, and

6.2.2 As welded and further reduced.

6.3 The tube shall be furnished annealed.

TABLE 2
PERMISSIBLE VARIATION IN PRODUCT ANALYSIS BETWEEN DIFFERENT LABORATORIES

Element	Permissible Variation in Product Analysis, %
Hydrogen	0.002
Nitrogen	0.01
Carbon	0.01
Hafnium	0.1
Iron + chromiun	0.025
Tin	0.05
Niobium	0.05
Oxygen	0.02

TABLE 3
TENSILE REQUIREMENTS

	UNS Grade Designation R60702	R60704	R60705
Tensile strength min, ksi (MPa)	55 (380)	60 (415)	80 (550)
Yield strength, min, ksi (MPa)	30 (205)	35 (240)	55 (380)
Elongation in 2 in. or 50 mm, min, %	16	14	16

7. Chemical Composition

7.1 The material shall conform to the requirements as to chemical composition prescribed in Table 1.

7.2 The manufacturer's ingot analysis shall be considered the chemical analysis for tubing, except for hydrogen and nitrogen, which shall be determined on the finished product.

7.3 When requested by the purchaser and stated in the purchase order, a product analysis for any elements listed in Table 1 shall be made on the finished product.

7.3.1 The manufacturer's analysis shall be considered as verified if the check analysis confirms the manufacturer's reported values within the tolerances prescribed in Table 2.

8. Tensile Requirements

8.1 The material, as represented by the test specimens, shall conform to the tensile properties prescribed in Table 3.

9. Permissible Variation in Dimensions

9.1 *Diameter* — Variations in outside diameter shall not exceed those prescribed in Table 4.

TABLE 4
PERMISSIBLE VARIATIONS IN OUTSIDE DIMENSIONS BASED ON INDIVIDUAL MEASUREMENTS

Outside Diameter, in. (mm)	Diameter Tolerance, in. (mm)[A,B]	Permissible Variations[C] in Wall Thickness, *t*, %
Under 1 (25), excl	±0.004 (±0.100)	10
1 to 1½ (25 to 40), excl	±0.005 (±0.125)	10
1½ to 2 (40 to 50), excl	±0.006 (±0.150)	10
2 to 2½ (50 to 65), excl	±0.007 (±0.180)	10
2½ to 3½ (65 to 90), excl	±0.010 (±0.250)	10

[A] These permissible variations in outside diameter apply only to tubes as finished at the mill before subsequent swaging, expanding, bending, polishing, or other fabricating operations.

[B] Ovality is the maximum and minimum outside diameter of a tube measured at any one cross section. If the measurement is made with a ring gage, the following formula shall apply: Ovality = specified OD tube + diameter tolerance + 0.002 in. (.05 mm) [length of ring gage, 1 in. (25 mm)] × specified tube OD.

[C] When minimum wall tubes are ordered, tolerances are all plus and shall be double the values shown.

TABLE 5
STRAIGHTNESS

Length, ft (m)	Maximum Curvature Depth of Arc
Over 3 to 6 (0.9 to 1.85), incl	⅛ in. (3.2 mm)
Over 6 to 8 (1.8 to 2.5), incl	3/16 in. (5 mm)
Over 8 to 10 (2.5 to 3.0), incl	¼ in. (6.4 mm)
Over 10 (3.0)	¼ in./any 10 ft (2.1 mm/m)

9.2 *Length* — When tubes are ordered cut to length, the length shall be not less than that specified, but a variation of ⅛ in. (3.2 mm) will be permitted on tube up to 10 ft (3 m), inclusive. For lengths over 10 ft, an additional over-tolerance of ⅛ in. (3.2 mm) for each 10 ft (3 m) or fraction thereof shall be permissible up to ½ in. (13 mm), maximum.

9.3 *Straightness* — The tube shall be free of bends or kinks and the maximum uniform bow shall not exceed the values shown in Table 5.

9.4 *Squareness of Cut* — The angle of cut of the end of any tube up to 1½ in. (40 mm) in outside diameter may depart from square not more than 0.016 in./in. (mm/mm).

10. Workmanship and Quality Level Requirements

10.1 The finished tube shall be clean and free of foreign material, shall have smooth ends, free of burrs, and shall be free of injurious external and internal imperfections in accordance with standards of acceptability agreed upon between the manufacturer and the purchaser. Minor defects may be removed provided the dimensional tolerances of Table 4 are not exceeded.

11. Significance of Numerical Limits

11.1 For the purpose of determining compliance with the specified limits for requirements of the properties listed in the following table, an observed value or a calculated value shall be rounded as indicated in accordance with the rounding methods of Practice E 29.

Property	Rounded Unit for Observed or Calculated Value
Chemical composition and tolerances (when expressed as decimals)	Nearest unit in the last right-hand place of figures of the specified limit
Tensile strength and yield strength	Nearest 1000 psi (10 MPa)
Elongation	Nearest 1%

12. Number of Tests and Retests

12.1 One longitudinal tension test, see 13.1, shall be made from each lot.

12.2 One chemistry test, see 7.2 and 13.7, for hydrogen and nitrogen shall be made from each lot of finished product.

12.3 One flare test, see 13.5, shall be made from each lot.

12.4 One reverse, see 13.6, flattening test shall be made from each lot of welded tubing.

12.5 Each tube shall be tested by a nondestructive electric test, see 13.2. Seamless tubes shall be tested by the ultrasonic test only, see 13.2.

12.6 Each tube shall be tested by either a hydrostatic or a pneumatic test, see 13.3 and 13.4.

12.7 *Retests:*

12.7.1 If any sample or specimen exhibits obvious surface contamination or improper preparation disqualifying it as a truly representative sample, it shall be discarded and a new sample or specimen substituted.

12.7.2 If the results of any tests of any lot do not conform to the requirements specified, retests shall be made on additional tubes of double the original number from the same lot, each of which shall conform to the requirements specified.

12.7.3 Retesting after failure of initial retests may be done only with the approval of the purchaser.

13. Test Methods

13.1 *Tension Tests* — Conduct the tension test in accordance with Test Methods E 8. Determine the yield strength by the offset (0.2%) method. Determine the tensile properties using a strain rate of 0.003 to 0.007 in./in. (mm/mm)/min through the yield strength. After the yield strength has been exceeded, the cross-head speed may be increased to approximately 0.05 in./in. (mm/mm)/min to failure.

13.2 *Nondestructive Electric or Ultrasonic Test:*

13.2.1 Test each tube with a nondestructive electric test in accordance with Practices E 213 or E 426.

13.2.1.1 *Eddy Current Testing:*

(a) The calibration tube shall contain, at the option of the producer, any one of the following discontinuities to establish a minimum sensitivity level for rejection. Place the discontinuity in the parent metal.

(b) Drilled Hole —Drill a hole not larger than 0.031 in. (0.8 mm) in diameter radially and completely through the tube wall, taking care to avoid distortion of the tube while drilling.

(c) Transverse Tangential Notch —Using a round tool or file with a 0.25-in. (6.4 mm) diameter, file or mill a notch tangential to the surface and transverse to the longitudinal axis of the tube. The notch shall have a depth not exceeding 12.5% of the specified wall thickness of the tube or 0.004 in. (0.10 mm), whichever is greater.

(d) Longitudinal Notch —Machine a notch 0.031 in (0.8 mm) or less in width in a radial plane parallel to the material axis on the outside of the tube to have a depth not exceeding 12.5% of the specified wall thickness of the material or 0.004 in. (0.10 mm), whichever is greater. The length of the notch shall be compatible with the testing method.

13.2.1.2 *Ultrasonic Testing* — For ultrasonic testing, the longitudinal calibration reference notches shall be at the option of the manufacturer, and be any one of the three common notch shapes in accordance with Practice E 213. The depth of the notch shall not exceed 12.5% of the specified wall thickness of the material or 0.004 in. (0.10 mm), whichever is greater.

13.2.2 Set aside any tubes showing an indication in excess of that obtained from the calibration standard and subject them to rework, retest, or rejection. A tube, therefore, set aside may be further examined for confirmation of the presence of a defect and may be resubmitted for inspection by the same technique if no defect is found. Any tube may also be resubmitted for inspection if reworked so as to remove the defect within the specified diameter and wall thickness tolerances as prescribed in Table 4. (Rework by weld repair is not permitted.)

13.3 *Hydrostatic Test:*

13.3.1 Each tube, so tested, shall withstand, without showing bulges, leaks, or other defects, an internal hydrostatic pressure that will produce in the tube wall a stress of 50% of the minimum specified yield strength at room temperature, except as restricted by 13.3.2. Determine the hydrostatic pressure as follows:

$$P = 2St/D \quad (1)$$

where:

P = minimum hydrostatic test pressure, psi (MPa),
S = allowable fiber stress of one half the minimum yield strength, psi (MPa),
t = wall thickness, in. (mm), and
D = outside diameter, in. (mm).

13.3.2 The maximum hydrostatic test pressure shall not exceed 2500 psi (17.2 MPa) for sizes 3 in. (75 mm) and under, or 2800 psi (19.3 MPa) for sizes over 3 in. (75 mm). Maintain the hydrostatic pressure for not less than 5 s. When requested by the purchaser and so stated in the order, test the tube in sizes 14 in. (350 mm) in diameter and smaller, to one and one half times the specified working pressure, provided the fiber stress corresponding to those test pressures does not exceed one half the minimum specified yield strength of the material as determined by the equation given in 13.3.1. When one and one half times the working pressure exceeds 2800 psi (19.3 MPa), the hydrostatic test pressure shall be a

matter of agreement between the manufacturer and the purchaser.

13.4 *Pneumatic Test* — Each tube so tested shall withstand an internal air pressure of 150 psi (1.0 MPa), minimum, for 5 s, minimum, without showing evidence of leakage. Use the test method that permits easy visual detection of any leakage, such as by placing the tube under water or by using the pressure differential method. Any evidence of leakage shall be cause for rejection of that tube.

13.5 *Flare Test* — A section of the annealed tube, approximately 4 in. (100 mm) in length, shall be capable of being flared without cracking visible to the unaided eye. Make the flare with a tool having a 60° included angle until the specified outside diameter has been increased by 15%.

NOTE 2 — Samples of tube supplied in tempers other than annealed may be annealed before testing.

13.6 *Reverse Flattening Test* — Subject welded tube to a reverse flattening test in accordance with Test Methods and Definitions A 370. Open and flatten a section of the tube approximately 4 in. (100 mm) long that is slit longitudinally 90° either side of the weld with the weld at the point of maximum bend. No cracking is permitted.

13.7 *Chemical Tests* — Conduct the chemical analysis by the standard techniques normally used by the manufacturer.

14. Inspection

14.1 The manufacturer shall inspect the material covered by this specification prior to shipment and, on request, shall furnish the purchaser with certificates of test. If so specified in the purchase order, the purchaser or his representative may witness the testing and inspection of the material at the place of manufacture. In such cases, the purchaser shall state in his purchase order which tests he desires to witness. The manufacturer shall give ample notice to the purchaser as to the time and place of the designated tests. If the purchaser's representative does not present himself at the time agreed upon for the testing, the manufacturer shall consider the requirement for the purchaser's inspection at the place of manufacture to be waived.

14.2 The manufacturer shall afford the inspector representing the purchaser, without charge, all reasonable facilities to satisfy him that the material is being furnished in accordance with this specification. This inspection shall be so conducted as not to interfere unnecessarily with the operation of the works.

15. Rejection

15.1 Rejection for failure of the material to meet the requirements of this specification shall be reported to the manufacturer within 60 calendar days from the receipt of the material by the purchaser. Unless otherwise specified, rejected material may be returned to the manufacturer at the manufacturer's expense, unless the purchaser receives, within three weeks of the notice of rejection, other instructions for disposition.

16. Certification

16.1 A producer or supplier shall furnish the purchaser with a certificate that the material was manufactured, sampled, tested, and inspected in accordance with this specification and has been found to meet the requirements. The certificate shall include a report of the test results.

17. Referee

17.1 In the event of disagreement between the manufacturer and the purchaser on the conformance of the material to the requirements of this specification or any special test specified by the purchaser, a mutually acceptable referee shall perform the tests in question. The results of the referee's testing shall be used in determining conformance of the material to this specification.

18. Product Marking

18.1 Each length of tube ½ in. (13 mm) and larger in outside diameter, manufactured in accordance with this specification shall be marked legibly, either by stenciling, stamping, or rolling, with the manufacturer's private identifying mark, the ASTM designation, method of manufacture, the grade, and heat number. On smaller than ½ in. (13 mm) in outside diameter tubing that is bundled, the same information may be stamped legibly on a metal tag securely attached to each bundle.

19. Packaging and Package Marking

19.1 The tube shall be packaged in such a manner as to assure safe delivery to its destination when properly transported by common carrier.

20. Keywords

20.1 tubes; tubing; zirconium; zirconium alloy

SPECIFICATION FOR NICKEL-IRON-CHROMIUM-SILICON ALLOYS (UNS N08330 AND N08332) SEAMLESS PIPE AND TUBE

SB-535

(Identical with ASTM Specification B 535-99 except that certification has been made mandatory.)

1. Scope

1.1 This specification covers alloys UNS N08330 and N08332 in the form of hot-finished and cold-finished seamless pipe and tube intended for heat resisting applications and general corrosive service.

1.2 The values stated in inch-pound units are to be considered as the standard. The values given in parentheses are for information only.

2. Referenced Document

2.1 *ASTM Standard:*

B 829 Specification for General Requirements for Nickel and Nickel Alloy Seamless Pipe and Tube

3. General Requirement

3.1 Material furnished under this specification shall conform to the applicable requirements of Specification B 829 unless otherwise provided herein.

4. Ordering Information

4.1 It is the responsibility of the purchaser to specify all requirements that are necessary for the safe and satisfactory performance of material ordered under this specification. Examples of such requirements include, but are not limited to, the following:

4.1.1 Alloy name or UNS number,

4.1.2 ASTM designation and year of issue,

4.1.3 *Dimensions:*

4.1.3.1 *Pipe* — Specify standard pipe size and schedule,

4.1.3.2 *Tube* — Specify outside diameter and nominal or minimum wall,

4.1.3.3 *Length* (specific or random),

4.1.4 *Finish:*

4.1.4.1 *Pipe* — Specify cold-worked or hot-worked,

4.1.4.2 *Tube* — Specify cold-worked or hot-finished,

4.1.5 *Quantity* (feet or meters or number of pieces),

4.1.6 *Certification* — Certification is required,

4.1.7 *Samples for Product (Check) Analysis* — State whether samples for product analysis should be furnished, and

4.1.8 *Purchaser Inspection* — If purchaser wishes to witness tests or inspection of material at place of manufacture, the purchase order must so state indicating which test or inspections are to be witnessed.

5. Materials and Manufacture

5.1 *Heat Treatment* — The material shall be furnished in the annealed condition. The final heat treatment of UNS N08330 shall be 1900°F (1040°C) minimum. The final heat treatment of UNS N08332 shall be 2100°F (1150°C) minimum.

6. Chemical Composition

6.1 The material shall conform to the composition limits specified in Table 1.

6.1.1 A chemical analysis shall be made on each lot of material as described in Specification B 829.

TABLE 1
CHEMICAL REQUIREMENTS

Element	Composition Limits, %
C	...[A]
Mn	2.00 max
P	0.03 max
S	0.03 max
Si	0.75–1.50
Cr	17.0–20.0
Ni	34.0–37.0
Cu	1.00 max
Pb	0.005 max
Sn	0.025 max
Fe	remainder[B]

[A] Alloy UNS N08330: 0.08 max. Alloy UNS N08332: 0.05–0.10.
[B] Element shall be determined arithmetically by difference.

6.2 If a product (check) analysis is performed by the purchaser, the material shall conform to the product analysis variations prescribed in Specification B 829.

7. Mechanical and Other Properties

7.1 The material shall conform to the mechanical properties listed in Table 2.

7.1.1 One tension test shall be made on each lot of material.

7.2 *Grain Size* — Annealed alloy UNS N08332 shall conform to an average grain size of ASTM No. 5 or coarser. One test per lot is required.

7.3 *Flattening Test* — One section of pipe or tube per lot, not less than $2\frac{1}{2}$ in. (63.5 mm) in length, shall be flattened cold between parallel plates in two steps. During the first step, which is test for ductility, no cracks or breaks on the inside, outside, or end surfaces shall occur until the distance between the plates is less than the value H calculated as follows:

$$H = 1.09\ t/(0.09 + t/D) \quad (1)$$

where:

H = distance between parallel plates, in.,
t = specified wall thickness, in., and
D = nominal outside diameter, in.

During the second step, which is a test for soundness, the flattening shall be continued until the specimen breaks or the opposite walls of the pipe or tube meet.

7.4 *Hydrostatic Test:*

7.4.1 Each pipe or tube shall be subjected to the hydrostatic test.

8. Dimensions and Permissible Variations

8.1 The permissible variations in outside diameter for pipe, both cold-finished and hot-finished, are shown in Table 3. Other dimensions and permissible variations are provided in Specification B 829.

9. Keywords

9.1 high-temperature alloy; N08330; N08332; seamless pipe; seamless tube

TABLE 2
MECHANICAL PROPERTIES

Alloy	Condition	Tensile Strength, min, psi (MPa)	Yield Strength, 0.2% offset, min, psi (MPa)	Elongation in 2 in. or 50 mm, or 4D, min, %	Hardness[A]
UNS N08330	annealed	70 000 (483)	30 000 (207)	30	70 to 90 HRB
UNS N08332	annealed	67 000 (462)	27 000 (186)	30	65 to 88 HRB

[A] Hardness values are informative only and not to be construed as the basis for acceptance.

TABLE 3
PERMISSIBLE VARIATIONS IN OUTSIDE DIAMETER, HOT-FINISHED AND COLD-FINISHED PIPE

	Permissible Variations in Outside Diameter			
	Over		Under	
Nominal Pipe Size, in.	in.	mm	in.	mm
1/8 to 1 1/2, incl	1/64	0.4	1/32	0.8
Over 1 1/2 to 4, incl	1/32	0.8	1/32	0.8
Over 4 to 8, incl	1/16	1.6	1/32	0.8
Over 8 to 18, incl	3/32	2.4	1/32	0.8

SPECIFICATION FOR NICKEL-IRON-CHROMIUM-SILICON ALLOYS (UNS N08330 AND N08332) PLATE, SHEET, AND STRIP

SB-536

(Identical with ASTM Specification B 536-95.)

1. Scope

1.1 This specification covers nickel-iron-chromium-silicon alloys (UNS N08330 and UNS N08332) plate, sheet, and strip intended for heat resisting applications and general corrosive service.

1.2 The values stated in inch-pound units are to be regarded as the standard. The values given in parentheses are for information only.

2. Referenced Documents

2.1 *ASTM Standards:*

E 8 Test Methods for Tension Testing of Metallic Materials

E 10 Test Method for Brinell Hardness of Metallic Materials

E 18 Test Methods for Rockwell Hardness and Rockwell Superficial Hardness of Metallic Materials

E 29 Practice for Using Significant Digits in Test Data to Determine Conformance with Specifications

E 38 Methods for Chemical Analysis of Nickel-Chromium and Nickel-Chromium-Iron Alloys

E 112 Test Methods for Determining the Average Grain Size

E 140 Standard Hardness Conversion Tables for Metals (Relationship Between Brinell Hardness, Vickers Hardness, Rockwell Hardness, Rockwell Superficial Hardness, and Knoop Hardness)

E 353 Test Methods for Chemical Analysis of Stainless, Heat-Resisting, Maraging, and Other Similar Chromium-Nickel-Iron Alloys

3. Terminology

3.1 *Descriptions of Terms Specific to This Standard:*

3.1.1 *plate* — material $^{3}/_{16}$ in. (4.76 mm) and over in thickness and over 10 in. (254 mm) in width.

3.1.2 *sheet* — material under $^{3}/_{16}$ in. (4.76 mm) in thickness and 24 in. (610 mm) in width.

3.1.3 *strip* — material under $^{3}/_{16}$ in. (4.76 mm) in thickness and under 24 in. (610 mm) in width.

4. Ordering Information

4.1 Orders for material to this specification shall include the following information:

4.1.1 *Quantity* (weight or number of pieces),

4.1.2 *Alloy* (Table 1),

4.1.3 *Form* (plate, sheet or strip),

4.1.4 ASTM designation and year of issue,

4.1.5 *Dimensions* — Thickness, width, and length,

4.1.6 *Edge* (for strip only),

4.1.7 *Finish* (Appendix) for sheet specify whether one or both sides are to be polished,

4.1.8 *Certification* — State if certification is required (Section 15),

4.1.9 *Samples for Product (Check) Analysis* — State whether samples for product (check) analysis should be furnished, and

TABLE 1
MECHANICAL PROPERTIES

Alloy	Condition	Tensile Strength, min, psi (MPa)	Yield Strength, 0.2% offset, min, psi (MPa)	Elongation in 2 in. or 50 mm, or 4*D*, min, %	Hardness[A]
UNS N08330	annealed	70 000 (483)	30 000 (207)	30	70 to 90 HRB
UNS N08332	annealed	67 000 (462)	27 000 (186)	30	65 to 88 HRB

[A] Hardness values are informative only and not to be construed as the basis for acceptance.

TABLE 2
CHEMICAL REQUIREMENTS

Element	Composition Limits, %	Product (Check) Analysis Variations, under min or over max of the specified limit of element
C	...[A]	0.01
Mn	2.00 max	0.04
P	0.03 max	0.005
S	0.03 max	0.005
Si	0.75–1.50	0.05 under; 0.10 over
Cr	17.0–20.0	0.25
Ni	34.0–37.0	0.30
Cu	1.00 max	0.04
Pb	0.005 max	...
Sn	0.025 max	...
Fe	remainder[B]	...

[A] Alloy UNS N08330: 0.08 max
Alloy UNS N08332: 0.05–0.10
[B] Element shall be determined arithmetically by difference.

TABLE 3
THICKNESS TOLERANCES FOR HOT-ROLLED AND COLD-ROLLED SHEETS

Specified Thickness, in. (mm)	Tolerance Over and Under, in. (mm)
Over 0.145 to less than $\frac{3}{16}$ (3.68 to less than 4.76)	0.014 (0.36)
Over 0.130 to 0.145 (3.30 to 3.68), incl	0.012 (0.30)
Over 0.114 to 0.130 (2.90 to 3.30), incl	0.010 (0.25)
Over 0.098 to 0.114 (2.49 to 2.90), incl	0.009 (0.23)
Over 0.083 to 0.098 (2.11 to 2.49), incl	0.008 (0.20)
Over 0.072 to 0.083 (1.83 to 2.11), incl	0.007 (0.18)
Over 0.058 to 0.072 (1.47 to 1.83), incl	0.006 (0.15)
Over 0.040 to 0.058 (1.02 to 1.47), incl	0.005 (0.13)
Over 0.026 to 0.040 (0.66 to 1.02), incl	0.004 (0.10)
Over 0.016 to 0.026 (0.41 to 0.66), incl	0.003 (0.08)
Over 0.007 to 0.016 (0.18 to 0.41), incl	0.002 (0.05)
Over 0.005 to 0.007 (0.13 to 0.18), incl	0.0015 (0.04)
0.005 (0.13)	0.001 (0.03)

4.1.10 *Purchaser Inspection* — If purchaser wishes to witness tests or inspections of material at place of manufacture, the purchase order must so state indicating which tests or inspections are to be witnessed.

5. Chemical Composition

5.1 The material shall conform to the requirements as to chemical composition specified in Table 2.

5.2 If a product (check) analysis is performed by the purchaser, the material shall conform to the product (check) analysis variations in Table 2.

6. Mechanical and Other Properties

6.1 The tensile properties of the material at room temperature shall conform to those shown in Table 1.

6.2 *Grain Size* — Annealed alloy UNS N08332 shall conform to an average grain size of ASTM No. 5 or coarser.

6.3 *Annealing Temperature* — Alloy UNS N08330 shall be annealed at 1900°F (1040°C) minimum. Alloy UNS N08332 shall be annealed at 2100°F (1150°C) minimum.

7. Permissible Variations in Dimensions and Weight

7.1 *Sheet,* shall conform to the variations in dimensions specified in Tables 3 to 8, inclusive.

7.2 *Cold-Rolled Strip,* shall conform to the permissible variations in dimensions as specified in Tables 9 to 13, inclusive.

7.3 *Plate,* shall conform to the permissible variations in dimensions specified in Tables 14 to 20, inclusive.

7.4 *Sheet Strip, and Plate* — Material with No. 1 finish may be ground to remove surface defects, provided such grinding does not reduce the thickness, width or length at any point beyond the permissible variations in dimensions.

TABLE 4
PERMISSIBLE VARIATIONS IN WIDTH AND LENGTH FOR HOT-ROLLED AND COLD-ROLLED RESQUARED SHEETS (Stretcher Leveled Standard of Flatness)

Specified Dimensions, in. (mm)	Tolerances, Over, in.	Tolerances, Over, mm	Tolerances, Under
For thicknesses under 0.131 (3.33):			
Widths up to 48 (1219) excl	1/16	1.6	0
Widths 48 (1219) and over	1/8	3.2	0
Lengths up to 120 (3048) excl	1/16	1.6	0
Lengths 120 (3048) and over	1/8	3.2	0
For thicknesses 0.131 (3.33) and over:			
All widths and lengths	1/4	6.4	0

TABLE 5
WIDTH, LENGTH, AND CAMBER TOLERANCES FOR HOT-ROLLED AND COLD-ROLLED SHEETS NOT RESQUARED OR STRETCHER LEVELED WIDTH TOLERANCES

Specified Thickness, in. (mm)	Tolerance for Specified Width, in. (mm): 24 to 48 (610 to 1220), excl	Tolerance for Specified Width, in. (mm): 48 in., (1220) and over
Less than 3/16 (4.76)	1/16 (1.6) over, 0 under	1/8 (3.2) over, 0 under

Length Tolerances

Specified Length, ft (cm)	Tolerance, in. (mm): Over	Tolerance, in. (mm): Under
Up to 10 (305), incl	1/4 (6.4)	0 (0)
Over 10 to 20 (305 to 610), incl	1/2 (12.7)	0 (0)

Camber Tolerances[A]

Specified Width, in. (mm)	Tolerance per Unit length of any 8 ft (244 cm), in. (mm)
24 to 36 in, (610 to 914), incl	1/8 (3.2)
Over 36 in. (914)	3/32 (2.4)

[A] Camber is the greatest deviation of a side edge from a straight line, and measurement is taken by placing an 8-ft (2440-mm) straightedge *on the concave side* and measuring the greatest distance between the sheet edge and the straightedge.

8. Workmanship, Finish, and Appearance

8.1 The material shall be uniform in quality and temper, smooth, commercially straight or flat and free of injurious imperfections.

9. Sampling

9.1 *Lot* — Definition:

9.1.1 A lot for chemical analysis shall consist of one heat.

9.1.2 A lot for mechanical properties, hardness, and grain size testing shall consist of all material from the same heat, nominal thickness, and condition.

9.1.2.1 Where material cannot be identified by heat, a lot shall consist of not more than 500 lb (227 kg) of material in the same thickness and condition, except that for plates weighing over 500 lb only one specimen shall be taken.

9.2 *Test Material Selection:*

9.2.1 *Chemical Analysis* — Representative samples from each lot shall be taken during pouring or subsequent processing.

9.2.1.1 Product (check) analysis shall be wholly the responsibility of the purchaser.

9.2.2 *Mechanical Properties and Grain Size* — Samples of the material to provide specimens for mechanical properties and grain size shall be taken from such locations in each lot as to be representative of that lot.

10. Number of Tests

10.1 *Chemical Analysis* — One test per lot.

10.2 *Grain Size* — One test per lot.

10.3 *Tensile Properties, Hardness and Bend Test* — One test per lot.

11. Specimen Preparation

11.1 Tension test, bend test, and grain size specimens shall be taken from material in the final condition (temper). Tension tests shall be transverse to the direction of rolling, where width will permit.

11.2 Tension test specimens shall be any of the standard or subsize specimens shown in Test Methods E 8.

11.3 In the event of disagreement, referee specimens shall be as follows:

11.3.1 Full thickness of the material, machine to the form and dimensions shown for the sheet-type specimen in Test Methods E 8 for material under 1/2 in. (12.7 mm) in thickness.

11.3.2 The largest possible round specimen shown in Test Methods E 8 for material 1/2 in. (12.7 mm) and over.

TABLE 6
FLATNESS TOLERANCES FOR HOT-ROLLED AND COLD-ROLLED SHEETS

Sheets Not Specified to Stretcher Leveled Standard of Flatness		
Specified Thickness, in. (mm)	Width, in. (mm)	Flatness Tolerance (max Deviation from a Horizontal Flat Surface), in. (mm)
0.062 (1.57) and over	To 60 (1524), incl	½ (12.7)
	Over 60 to 72 (1524 to 1829), incl	¾ (19.1)
	Over 72 (1829)	1 (25.4)
Under 0.062 (1.57)	To 36 (914), incl	½ (12.7)
	Over 36 to 60 (914 to 1524), incl	¾ (19.1)
	Over 60 (1524)	1 (25.4)

Sheets Specified to Stretcher Level Standard of Flatness			
Specified Thickness in. (mm)	Width, in. (mm)	Length, in. (mm)	Flatness Tolerance in. (mm)
Under 3/16 (4.76)	To 48 (1220), incl	To 96 (2440), incl	1/8 (3.2)
Under 3/16 (4.76)	To 48 (1220), incl	Over 96 (2440)	1/4 (6.4)
Under 3/16 (4.76)	Over 48 (1220)	To 96 (2440), incl	1/4 (6.4)
Under 3/16 (4.76)	Over 48 (1220)	Over 96 (2440)	1/4 (6.4)

TABLE 7
DIAMETER TOLERANCES FOR HOT-ROLLED AND COLD-ROLLED SHEETS, SHEARED CIRCLES

	Tolerance Over Specified Diameter (No Tolerance Under) in. (mm)		
Specified Thickness, in. (mm)	Under 30 (760)	30 to 48 (760 to 1220), incl	Over 48 (1220)
Over 0.097 (2.46)	1/8 (3.2)	3/16 (4.8)	1/4 (6.4)
Over 0.057 to 0.097 (1.45 to 2.46), incl	3/32 (2.4)	5/32 (4.0)	7/32 (5.6)
0.057 (1.45) and under	1/16 (1.6)	1/8 (3.2)	3/16 (4.8)

TABLE 8
WEIGHT TOLERANCES FOR HOT-ROLLED AND COLD-ROLLED SHEETS

It is not practicable to produce hot-rolled and cold-rolled sheets to exact theoretical weight. Sheets of any one item of a specified thickness and size in any finish may be overweight to the following extent:

(1) An item of five sheets or less, or an item estimated to weigh 200 lb (90 kg) or less, may actually weigh as much as 10 percent over the theoretical weight.

(2) An item of more than five sheets and estimated to weigh more than 200 lb (90 kg) may actually weigh as much as 7½ percent over the theoretical weight.

(3) The underweight variations for sheets are limited by the under thickness tolerances shown in Table 3.

For determining theoretical weight the factor, 42 lb/ft^2 · in. (0.0008 kg/cm^2 · mm) thickness may be used.

12. Methods of Test

12.1 *Chemical Composition* — In case of disagreement, the chemical composition shall be determined in accordance with Test Methods E 353 except, Methods E 38 are to be used for elements not covered by Methods E 353.

12.2 *Tension Test* — Tension testing shall be conducted in accordance with Test Methods E 8.

12.3 *Grain Size* — The measurement of average grain size may be carried out by the planimetric method, the comparison method, or the intercept method described in Methods E 112. In case of dispute, the "referee" method for determining average grain size shall be the planimetric method.

12.4 *Rockwell Hardness* — Test Method E 18.

12.5 *Brinell Hardness* — Test Method E 10.

12.6 *Hardness Conversion* — Hardness Conversion Tables E 140.

12.7 *Rounding Method* — For purposes of determining compliance with the limits in this specification, an observed value or a calculated value shall be rounded off as indicated below, in accordance with the rounding-off method of Practice E 29.

TABLE 9
THICKNESS TOLERANCES FOR COLD-ROLLED STRIP IN COILS AND CUT LENGTHS

Specified thickness, in. (mm), incl	Thickness Tolerances, in. (mm), for the Thicknesses and Widths given, over and under		
	Width, in. (mm)		
	3/16 (4.8) to 6 (152), incl	Over 6 (152) to 12 (305), incl	Over 12 (305) to 24 (610), excl
0.005 (0.13) to 0.010 (0.25)	10%	10%	10%
Over 0.010 (0.25) to 0.011 (0.28)	0.0015 (0.04)	0.0015 (0.04)	0.0015 (0.04)
Over 0.011 (0.28) to 0.013 (0.33)	0.0015 (0.04)	0.0015 (0.04)	0.002 (0.05)
Over 0.013 (0.33) to 0.017 (0.43)	0.0015 (0.04)	0.002 (0.05)	0.002 (0.05)
Over 0.017 (0.43) to 0.020 (0.51)	0.0015 (0.04)	0.002 (0.05)	0.0025 (0.06)
Over 0.020 (0.51) to 0.029 (0.74)	0.002 (0.05)	0.0025 (0.06)	0.0025 (0.06)
Over 0.029 (0.74) to 0.035 (0.89)	0.002 (0.05)	0.003 (0.08)	0.003 (0.08)
Over 0.035 (0.89) to 0.050 (1.27)	0.0025 (0.06)	0.0035 (0.09)	0.0035 (0.09)
Over 0.050 (1.27) to 0.069 (1.75)	0.003 (0.08)	0.0035 (0.09)	0.0035 (0.09)
Over 0.069 (1.75) to 0.100 (2.54)	0.003 (0.08)	0.004 (0.10)	0.005 (0.13)
Over 0.100 (2.54) to 0.125 (3.18)	0.004 (0.10)	0.0045 (0.11)	0.005 (0.13)
Over 0.125 (3.18) to 0.161 (4.09)	0.0045 (0.11)	0.0045 (0.11)	0.005 (0.13)
Over 0.161 (4.09) to 3/16 (4.76) excl	0.005 (0.13)	0.005 (0.13)	0.006 (0.15)

NOTE 1 — Thickness measurements are taken at least 3/8 in. (9.5 mm) in from edge of the strip, except that on widths less than 1 in. (25.4 mm) the tolerances are applicable for measurements at all locations.

NOTE 2 — Above tolerances include crown.

TABLE 10
WIDTH TOLERANCES COLD-ROLLED STRIP IN COILS AND CUT LENGTHS, EDGE NUMBERS 1 AND 5

Specified Edge No.	Width, in. (mm)	Thickness, in. (mm)	Width Tolerance, in. (mm) for Thickness and Width given over and under
1 and 5	9/32 (7.1) and under	1/16 (1.6) and under	0.005 (0.13)
1 and 5	Over 9/32 (7.1) to 3/4 (19.1) incl	3/32 (2.4) and under	0.005 (0.13)
1 and 5	Over 3/4 (19.1) to 5 (127) incl	1/8 (3.2) and under	0.005 (0.13)
5	Over 5 (127) to 9 (229) incl	1/8 (3.2) to 0.008 (0.20) incl	0.010 (0.25)
5	Over 9 (229) to 20 (508) incl	0.105 (2.67) to 0.015 (0.38) incl	0.010 (0.25)
5	Over 20 (508) to 24 (610) excl	0.080 (2.03) to 0.023 (0.58) incl	0.015 (0.38)

TABLE 11
WIDTH TOLERANCES COLD-ROLLED STRIP IN COILS AND CUT LENGTHS EDGE NUMBER 3

Specified Thickness in. (mm)	Width Tolerance, in. (mm) Over and Under, for Thickness and Width Given					
	Under 1/2 (12.7) to 3/16 (4.8)	1/2 (12.7) to 6 (152)	Over 6 (152) to 9 (229)	Over 9 (229) to 12 (305)	Over 12 (305) to 20 (508)	Over 20 (508) to 24 (610)
0.068 (1.73) and under	0.005 (0.13)	0.005 (0.13)	0.005 (0.13)	0.010 (0.25)	0.016 (0.41)	0.020 (0.51)
Over 0.068 (1.75) to 0.099 (2.51), incl	0.008 (0.20)	0.008 (0.20)	0.010 (0.25)	0.010 (0.25)	0.016 (0.41)	0.020 (0.51)
Over 0.099 (2.51) to 0.160 (4.06), incl	0.010 (0.25)	0.010 (0.25)	0.016 (0.41)	0.016 (0.41)	0.020 (0.51)	0.020 (0.51)
Over 0.160 (4.06) to under 3/16 (4.76) excl	...	0.016 (0.41)	0.020 (0.51)	0.020 (0.51)	0.031 (0.79)	0.031 (0.79)

TABLE 12
LENGTH TOLERANCES COLD-ROLLED STRIP IN CUT LENGTHS

Specified Length, in. (mm)	Tolerance, in. (mm) Over Specified Length, No Tolerance Under
Up to 60 (1524) incl	3/8 (9.5)
Over 60 (1524) to 120 (3048) incl	1/2 (12.7)
Over 120 (3048) to 240 (6096) incl	5/8 (15.9)

TABLE 13
CAMBER TOLERANCES COLD-ROLLED STRIP IN COILS AND CUT LENGTHS

Specified Width, in. (mm)	Tolerance in. (mm) per unit Length of any 8 ft. (2440 mm)
Up to 1 1/2 (38.1) incl	1/2 (12.7)
Over 1 1/2 (38.1) to 24 (609.6) excl	1/4 (6.4)

NOTE — Camber is the deviation of a side edge from a straight line, and measurement is taken by placing an 8-ft (24-mm) straight edge on the concave side and measuring the greatest distance between the strip edge and the straight edge.

TABLE 14
PERMISSIBLE VARIATIONS IN THICKNESS FOR PLATES[A]

	Width, in. (mm)			
Specified Thickness, in. (mm)	To 84 (2134), incl	Over 84 (2134) to 120 (3048), incl	Over 120 (3048) to 144 (3658), incl	Over 144 (3658)
	Tolerance Over Specified Thickness,[B] in. (mm)			
1/16 (4.76) to 3/8 (9.52), excl	0.045 (1.14)	0.050 (1.27)	...	...
3/8 (9.52) to 3/4 (19.05), excl	0.055 (1.40)	0.060 (1.52)	0.075 (1.90)	0.090 (2.29)
3/4 (19.05) to 1 (25.40), excl	0.060 (1.52)	0.065 (1.65)	0.085 (2.16)	0.100 (2.54)
1 (25.40) to 2 (50.80), excl	0.070 (1.78)	0.075 (1.90)	0.095 (2.41)	0.115 (2.92)
2 (50.80) to 3 (76.20), excl	0.125 (3.18)	0.150 (3.81)	0.175 (4.44)	0.200 (5.08)
3 (76.20) to 4 (101.6), excl	0.175 (4.44)	0.210 (5.33)	0.245 (6.22)	0.280 (7.11)

[A] Thickness is measured along the longitudinal edges of the plate at least 3/8 in. (9.52 mm), but not more than 3 in. (76.20 mm), from the edge.

[B] For circles, the over thickness tolerances in this table apply to the diameter of the circle corresponding to the width ranges shown. For plates of irregular shape, the over thickness tolerances apply to the greatest width corresponding to the width ranges shown. For plates up to 10 in. (254.0 mm), incl, in thickness, the tolerance under the specified thickness is 0.010 in. (0.25 mm).

TABLE 15
WIDTH AND LENGTH TOLERANCES FOR PLATES[A, B]

		Tolerance Over Specified Width and Length for Given Width, Length, and Thickness, in.					
		Under 3/8 in.		3/8 to 1/2 in., incl, in Thickness		Over 1/2 in. in Thickness	
Width, in.	Length, in.	Width	Length	Width	Length	Width	Length
48 and under	144 and under	1/8	3/16	3/16	1/4	5/16	3/8
Over 48 to 60, incl		3/16	1/4	1/4	5/16	3/8	7/16
Over 60 to 84, incl		1/4	5/16	5/16	3/8	7/16	1/2
Over 84 to 108, incl		5/16	3/8	3/8	7/16	1/2	9/16
Over 108		3/8	7/16	7/16	1/2	5/8	11/16
48 and under	over 144 to 240	3/16	3/8	1/4	1/2	5/16	5/8
Over 48 to 60, incl		1/4	7/16	5/16	5/8	3/8	3/4
Over 60 to 84, incl		3/8	1/2	7/16	11/16	1/2	3/4
Over 84 to 108, incl		7/16	9/16	1/2	3/4	5/8	7/8
Over 108		1/2	5/8	5/8	7/8	11/16	1
48 and under	over 240 to 360	1/4	1/2	5/16	5/8	3/8	3/4
Over 48 to 60, incl		5/16	5/8	3/8	3/4	1/2	3/4
Over 60 to 84, incl		7/16	11/16	1/2	3/4	5/8	7/8
Over 84 to 108, incl		9/16	3/4	5/8	7/8	3/4	1
Over 108		5/8	7/8	11/16	1	7/8	1
60 and under	over 360 to 480	7/16	1 1/8	1/2	1 1/4	5/8	1 3/8
Over 60 to 84, incl		1/2	1 1/4	5/8	1 3/8	3/4	1 1/2
Over 84 to 108, incl		9/16	1 1/4	3/4	1 3/8	7/8	1 1/2
Over 108		3/4	1 3/8	7/8	1 1/2	1	1 5/8
60 and under	over 480 to 600	7/16	1 1/4	1/2	1 1/2	5/8	1 5/8
Over 60 to 84, incl		1/2	1 3/8	5/8	1 1/2	3/4	1 5/8
Over 84 to 108, incl		5/8	1 3/8	3/4	1 1/2	7/8	1 5/8
Over 108		3/4	1 1/2	7/8	1 5/8	1	1 3/4
60 and under	over 600	1/2	1 3/4	5/8	1 7/8	3/4	1 7/8
Over 60 to 84, incl		5/8	1 3/4	3/4	1 7/8	7/8	1 7/8
Over 84 to 108, incl		5/8	1 3/4	3/4	1 7/8	7/8	1 7/8
Over 108		7/8	1 3/4	1	2	1 1/8	2 1/4

		Tolerance Over Specified Width and Length for Given Width, Length, and Thickness, mm					
		Under 9.5 mm		9.5 to 12.7 mm, incl in Thickness		Over 12.7 mm in Thickness	
Width, mm	Length, mm	Width	Length	Width	Length	Width	Length
1219 mm and under		3.2	4.8	4.8	6.4	7.9	9.5
Over 1219 to 1524, incl	3658 and under	4.8	6.4	6.4	7.9	9.5	11.1
Over 1524 to 2134, incl		6.4	7.9	7.9	9.5	11.1	12.7
Over 2134 to 2743, incl		7.9	9.5	9.5	11.1	12.7	14.3
Over 2743		9.5	11.1	11.1	12.7	15.9	17.5
1219 mm and under		4.8	9.5	6.4	12.7	7.9	15.9
Over 1219 to 1524, incl	over 3658 to 6096	6.4	11.1	7.9	15.9	9.5	19.1
Over 1524 to 2134, incl		9.5	12.7	11.1	17.5	12.7	19.1
Over 2134 to 2743, incl		11.1	14.3	12.7	19.1	15.9	22.2
Over 2743, incl		12.7	15.9	15.9	22.2	17.5	25.4
1219 mm and under		6.4	12.7	7.9	15.9	9.5	19.1
Over 1219 to 1524, incl	over 6096 to 9144	7.9	15.9	9.5	19.1	12.7	19.1
Over 1524 to 2134, incl		11.1	17.5	12.7	19.1	15.9	22.2
Over 2134 to 2743, incl		14.3	19.1	15.9	22.2	19.1	25.4
Over 2743, incl		15.9	22.2	17.5	25.4	22.2	25.4
1524 mm and under		11.1	28.6	12.7	31.8	15.9	34.9
Over 1524 to 2134, incl	over 9144 to 12192	12.7	31.8	15.9	34.9	19.1	38.1
Over 2134 to 2734, incl		14.3	31.8	19.1	34.9	22.2	38.1
Over 2743		19.1	34.9	22.2	38.1	25.4	41.3
1524 mm and under		11.1	31.8	12.7	38.1	15.9	41.3
Over 1524 to 2134, incl	over 12192 to 15240	12.7	34.9	15.9	38.1	19.1	41.3
Over 2134 to 2743, incl		15.9	34.9	19.1	38.1	22.2	41.3
Over 2743		19.1	38.1	22.2	41.3	25.4	44.3
1524 mm and under		12.7	44.5	15.9	47.6	19.1	47.6
Over 1524 to 2134, incl	over 15240	15.9	44.5	19.1	47.6	22.2	47.6
Over 2134 to 2743, incl		15.9	44.5	19.1	47.6	22.2	47.6
Over 2743		22.2	44.5	25.4	50.8	28.6	57.2

[A] The tolerance under specified width and length is 1/4 in. (6.4 mm).

[B] Rectangular plates over 1 in. (25.4 mm) in thickness are not commonly sheared and are machined or otherwise cut to length and width or produced in the size as rolled, uncropped.

TABLE 16
CAMBER TOLERANCE FOR PLATES

Tolerance = 1/8 in. (3.175 mm) × [ft (cm) of length/5 ft (152.4 cm)]

TABLE 17
DIAMETER TOLERANCE FOR CIRCULAR PLATES

Specified Diameter, in. (mm)	Tolerance over Specified Diameter for Given Diameter and Thickness (No Under Tolerance), in. (mm)		
	Thickness		
	To 3/8 (9.5), excl	3/8 to 5/8 (9.5 to 15.9), excl	5/8 (15.9) and over
To 60 (1524), excl	1/4 (6.4)	3/8 (9.5)	1/2 (12.7)
60 to 84 (1524 to 2134), excl	5/16 (7.9)	7/16 (11.1)	9/16 (14.3)
84 to 108 (2134 to 2743), excl	3/8 (9.5)	1/2 (12.7)	5/8 (15.9)
108 to 130 (2743 to 3302), excl	7/16 (11.1)	9/16 (14.3)	11/16 (17.5)

TABLE 18
FLATNESS TOLERANCES FOR PLATES

Specified Thickness, in.	Flatness Tolerance (Deviation from A Flat Horizontal Surface) for Thickness and Width Given, in.								
	Width, in.								
	48 and Under	Over 48 to 60, excl	60 to 72, excl	72 to 84, excl	84 to 96, excl	96 to 108, excl	108 to 120, excl	120 to 144, excl	144 and Over
3/16 to 1/4, excl	3/4	1 1/16	1 1/4	1 3/8	1 5/8	1 5/8	1 7/8	2	...
1/4 to 3/8, excl	11/16	3/4	15/16	1 1/8	1 3/8	1 7/16	1 9/16	1 7/8	...
3/8 to 1/2, excl	1/2	9/16	11/16	3/4	15/16	1 1/8	1 1/4	1 7/16	1 3/4
1/2 to 3/4, excl	1/2	9/16	5/8	5/8	13/16	1 1/8	1 1/8	1 1/8	1 3/8
3/4 to 1, excl	1/2	9/16	5/8	5/8	3/4	13/16	15/16	1	1 1/8
1 to 1 1/2, excl	1/2	9/16	9/16	9/16	11/16	11/16	11/16	3/4	1
1 1/2 to 4, excl	3/16	5/16	3/8	7/16	1/2	9/16	5/8	3/4	7/8
4 to 6, excl	1/4	3/8	1/2	9/16	5/8	3/4	7/8	1	1 1/8

Specified Thickness, mm.	Flatness Tolerance (Deviation from A Flat Horizontal Surface) for Thickness and Width Given, mm								
	Width, mm								
	1219 and Under	Over 1219 to 1524, excl	1524 to 1829, excl	1829 to 2134, excl	2134 to 2438, excl	2438 to 2743, excl	2743 to 3048, excl	3048 to 3658, excl	3658 and Over
4.8 to 6.4, excl	19.0	27.0	31.8	34.9	41.3	41.3	47.6	50.8	...
6.4 o 9.5, excl	17.5	19.0	23.8	28.6	34.9	36.5	39.7	47.6	...
9.5 to 12.7, excl	12.7	14.3	17.5	19.0	23.8	28.6	31.8	36.5	44.5
12.7 to 19.0, excl	12.7	14.3	15.9	15.9	20.6	28.6	28.6	28.6	34.9
19.0 to 25.4, excl	12.7	14.3	15.9	15.9	19.0	20.6	23.8	25.4	28.6
25.4 to 38.1, excl	12.7	14.3	14.3	14.3	17.5	17.5	17.5	19.0	25.4
38.1 to 102, excl	4.8	7.9	9.5	11.1	12.7	14.3	15.9	19.0	22.2
102 to 152, excl	6.4	9.5	12.7	14.3	15.9	19.0	22.2	25.4	28.6

TABLE 19
RECOMMENDED PLATE FLAME-CUTTING TOLERANCES TO CLEAN UP IN MACHINING

Specified Thickness, in. (mm)	Machining Allowance per Edge, in. (mm)
Under 2 (51)	1/4 (6.4)
Over 2 to 3 (51 to 76), incl	3/8 (9.5)
Over 3 to 6 (76 to 152), incl	1/2 (12.7)

TABLE 20
ABRASIVE-CUTTING WIDTH AND LENGTH TOLERANCES

	Tolerance Over Specified Width and Length, in. (mm)[A]	
Specified Thickness, in. (mm)	Width	Length
Up to 1 1/4 (32)	1/8 (3.2)	1/8 (3.2)
Over 1 1/4 to 2 3/4 (32 to 70)	3/16 (4.8)	3/16 (4.8)

[A]The tolerance under specified width and length is 1/8 in. (3.2 mm).

Requirement	Rounded-Off Unit for Observed or Calculated Value
Chemical composition and tolerances (when expressed in decimals)	Nearest unit in the last right-hand place of figures of the specified limit. If two choices are possible, as when the digits dropped are exactly a 5, or a 5 followed only by zeros, choose the one ending in an even digit, with zero defined as an even digit
Tensile strength and yield strength	Nearest 1000 psi (6.9 MPa)
Elongation	Nearest 1%
Grain size: 0.0024 in. (0.060 mm) or larger	Nearest multiple of 0.0002 in. (0.005 mm)
Less than 0.0024 in. (0.060 mm)	Nearest multiple of 0.0001 in. (0.002 mm)

13. Inspection

13.1 Inspection of the material shall be made as agreed upon between the manufacturer and the purchaser as part of the purchase contract.

14. Rejection and Rehearing

14.1 Material that fails to conform to the requirements of this specification may be rejected. Rejection should be reported to the producer or supplier promptly and in writing. In case of dissatisfaction with the results of the test, the producer or supplier may make claim for a rehearing.

15. Certification

15.1 When specified in the purchase order or contract, a producer's or supplier's certification shall be furnished to the purchaser that the material was manufactured, sampled, tested, and inspected in accordance with this specification and has been found to meet the requirements. When specified in the purchase order or contract, a report of the test results shall be furnished.

16. Product Marking

16.1 The following information shall be marked on the material: The name of the material or UNS number, heat number, the letters ASTM, the specification number, the year of issue, the size, and other such information as may be defined in the contract or order.

17. Keywords

17.1 N08330; N08332; plate; sheet; strip

APPENDIX

(Nonmandatory Information)

X1. FINISHES

X1.1 *Scope* — This appendix lists the finishes in which plate, sheet, and strip are normally supplied. These are subject to change and the manufacturer should be consulted for the latest information available.

X1.2 *Sheet* — The various types of finish procurable on sheet products are:

X1.2.1 *No. 1 Finish* — Hot-rolled, annealed, and descaled.

X1.2.2 *No. 2D Finish* — Dull, cold-rolled finish.

X1.2.3 *No. 2B Finish* — Bright, cold-rolled finish.

X1.2.3.1 *Bright-Annealed Finish* — A bright cold-rolled finish retained by final annealing in a controlled atmosphere furnace.

NOTE X1.1 — Explanation of Finish:

No. 1 — Produced on hand sheet mills by hot rolling to specified thicknesses followed by annealing and descaling. Generally used in industrial applications, such as for heat or corrosion resistance, where smoothness and uniformity of finish is not of particular importance.

No. 2D — Produced on either hand sheet mills or continuous mills by cold rolling to the specified thickness, annealing, and descaling. The dull finish may result from the descaling or pickling operation or may be developed by a final light cold-rolled pass on dull rolls. The dull finish is favorable for the retention of lubricants on the surface in deep drawing operations. This finish is generally used in forming deep drawn articles which may be polished after fabrication.

No. 2B — Commonly produced the same as No. 2D, except that the annealed and descaled sheet receives a final light cold-rolled pass on polished rolls. This is a general purpose cold-rolled finish. It is commonly used for all but exceptionally difficult deep drawing application. This finish is more readily polished than No. 1 or No. 2D finish.

Bright-Annealed Finish — A bright cold-rolled highly reflective finish retained by final annealing in a controlled atmosphere furnace. The purpose of the atmosphere is to prevent scaling or oxidation during annealing. The atmosphere is usually comprised of either dry hydrogen or a mixture of dry hydrogen and dry nitrogen (sometimes known as dissociated ammonia).

X1.3 *Strip* — The various types of finish procurable on cold-rolled strip products shall be as follows:

X1.3.1 *No. 1 Finish* — Cold-rolled to specified thickness, annealed, and pickled.

X1.3.2 *No. 2 Finish* — Same as No. 1 finish, followed by a final light cold-rolled pass, generally on highly-polished rolls.

X1.3.3 *Bright-Annealed Finish* — A bright cold-rolled finish retained by final annealing in a controlled atmosphere furnace.

NOTE X1.2 — Explanation of Finish:

No. 1 — Appearance may be dull-gray matte to fairly reflective. This finish is used for severely drawn or formed parts as well as for applications where the brighter No. 2 finish is not required, such as in parts for heat resistance.

No. 2 — This finish has a smoother and more reflective surface. This is a general purpose finish, widely used for household and automotive trim, tableware, utensils, trays, etc.

Bright-Annealed Finish — A bright cold-rolled highly reflective finish retained by final annealing in a controlled atmosphere furnace. The purpose of the atmosphere is to prevent scaling or oxidation during annealing. The atmosphere is usually comprised of either dry hydrogen or a mixture of dry hydrogen and dry nitrogen (sometimes known as dissociated ammonia).

X1.3.4 The various types of edges obtainable on strip are as follows:

X1.3.5 *No. 1 Edge* — Rolled edge, either round or square as specified.

X1.3.6 *No. 3 Edge* — An edge produced by slitting.

X1.3.7 *No. 5 Edge* — Approximately square edge produced by rolling or filing after slitting.

X1.4 *Plate* — The types of finish obtainable on plate are as follows:

X1.4.1 *Hot-Rolled, Annealed* — Scale not removed. Use of plates in this condition is generally confined to heat-resisting applications.

X1.4.2 *Hot-Rolled, Annealed, Descaled* — Scale removed by a blast-cleaning or pickling operation. Finish commonly preferred for corrosion resisting applications or where non-flux type welding operations will be performed.

X1.4.3 *Cold-Rolled, Annealed* — Bright-annealed finish or scale removed by a blast-cleaning or pickling operation.

SPECIFICATION FOR WELDED COPPER AND COPPER-ALLOY HEAT EXCHANGER TUBE

SB-543

(Identical to ASTM Specification B 543-96 for the alloys and tempers covered except for the deletion of Supplementary Requirements for government procurement. Certification has been made mandatory.)

1. Scope

1.1 This specification covers welded tube of copper and various copper alloys up to $3\frac{1}{8}$ in., inclusive, in diameter, for use in surface condensers, evaporators, heat exchangers, and general engineering applications. Tubes for this application are normally made of the following coppers or copper alloys:

Copper or Copper Alloy UNS No.	Previously Used Designation	Type of Metal
C12200	DHP[A]	Phosphorized, high residual phosphorus
C19400	. . .	Copper-iron alloy
C23000	. . .	Red brass
C44300	. . .	Arsenical admiralty
C44400	. . .	Antimonial admiralty
C44500	. . .	Phosphorized admiralty
C68700	. . .	Arsenical aluminum brass
C70400	. . .	95-5 copper-nickel
C70600	. . .	90-10 copper-nickel
C71500	. . .	70-30 copper-nickel

[A] Designation listed in Classification B 224.

1.2 Warning — Mercury is a definite health hazard in use and disposal. (See 14.1.)

NOTE 1 — A complete metric companion to Specification B 543 has been developed—B 543 M; therefore, no metric equivalents are presented in this specification.

2. Referenced Documents

2.1 The following documents of the issue in effect on date of material purchase form a part of this specification to the extent referenced herein:

2.1.1 *ASTM Standards:*

B 153 Test Method for Expansion (Pin Test) of Copper and Copper-Alloy Pipe and Tubing

B 154 Test Method for Mercurous Nitrate Test for Copper and Copper Alloys

B 224 Classification of Coppers

E 8 Test Methods for Tension Testing of Metallic Materials

E 29 Practice for Using Significant Digits in Test Data to Determine Conformance With Specifications

E 53 Test Methods for Chemical Analysis of Copper

E 54 Test Methods for Chemical Analysis of Special Brasses and Bronzes

E 55 Practice for Sampling Wrought Nonferrous Metals and Alloys for Determination of Chemical Composition

E 62 Test Methods for Chemical Analysis of Copper and Copper Alloys (Photometric Methods)

E 75 Test Methods for Chemical Analysis of Copper-Nickel and Copper-Nickel-Zinc Alloys

E 112 Test Methods for Determining Average Grain Size

E 243 Practice for Electromagnetic (Eddy-Current) Examination of Copper and Copper-Alloy Tubes

E 478 Test Methods for Chemical Analysis of Copper Alloys

E 527 Practice for Numbering Metals and Alloys (UNS)

3. Terminology

3.1 *Description of Term Specific to This Standard:*

3.1.1 *capable of* — as used in this specification, the test need not be performed by the producer of the material. However, should subsequent testing by the purchaser establish that the material does not meet these requirements, the material shall be subject to rejection.

4. Types of Welded Tube

4.1 *Forge-Welded Tube* — Manufactured as described in 6.2.1, 6.2.1.1, and 6.2.1.2.

4.1.1 *As-Welded Tube* — Forge-welded tube with internal and external flash removed and no further refinement of grain structure.

4.1.2 *Welded and Annealed Tube* — Forge-welded tube with internal and external flash removed, that has been annealed to produce a uniform grain size appropriate to the specified annealed temper.

4.1.3 *Welded and Cold-Reduced Tube* — Forge-welded tube with internal and external flash removed and subsequently cold reduced to conform to the specified size and temper.

4.1.4 *Welded and Cold-Drawn Tube* — Forge-welded tube with internal and external flash removed and subsequently cold drawn over a plug or mandrel to the specified size and temper.

4.2 *Fusion-Welded Tube* — Manufactured as described in 6.2.2.

4.2.1 *As-Welded Tube* — Fusion-welded tube with no further refinement of grain structure.

4.2.2 *Welded and Annealed Tube* — Fusion-welded tube that has been annealed to produce a uniform grain size appropriate to the specified annealed temper. The structure of the weld zone shall be that which is typical of a fusion weld.

4.2.3 *Welded and Cold-Reduced Tube* — Fusion-welded tube subsequently cold-reduced to conform to the specified size and temper.

4.2.4 *Welded and Cold-Drawn Tube* — Fusion-welded tube subsequently cold-drawn over a plug or mandrel to the specified size and temper.

4.3 *Fully Finished Tube* — Welded tube with internal and external flash removed, if present, and subsequently cold-drawn over a plug or mandrel and annealed, and redrawn when necessary to conform to the specified temper.

5. Ordering Information

5.1 Orders for material under this specification shall include the following information:

5.1.1 Quantity of each size (number of pieces and number of feet),

5.1.2 Material (Sections 1, 6, and 7),

5.1.3 Temper (Section 8),

5.1.3.1 If tension tests are required (Section 9),

5.1.4 Whether a pressure test is to be used instead of the eddy-current test (see 15.1),

5.1.5 Dimensions, the diameter, wall thickness, whether minimum or nominal wall, and length (Section 16),

5.1.6 Type of welded tube (Section 4),

5.1.7 Whether cut ends of the tube are to be deburred, chamfered, or otherwise treated (see 17.1),

5.1.8 If the product is to be subsequently welded (see Table 1 and Footnote C),

5.1.9 Specification number and year of issue,

5.1.10 Certification (Section 24), and

5.1.11 Mill test report, if required (Section 26).

6. Materials and Manufacture

6.1 The material shall be of such quality and purity that the finished product shall have the properties and characteristics prescribed in this specification.

6.2 Welded tube shall be made of clean strip in either cold-rolled or annealed tempers. The strip shall be formed into a tubular shape on a suitable forming mill.

6.2.1 For forge-welded tube, the edges of the strip shall be heated to the required welding temperature, usually by high-frequency electric current, and be pressed firmly together causing a forge-type joint to be formed with internal and external flash or bead.

6.2.1.1 The external flash (that portion of the weld which extends beyond the normal wall) shall always be removed.

6.2.1.2 The internal flash in forge-welded tube shall be removed to the extent that it shall not exceed 0.006 in. in height or 10% of the nominal wall thickness, whichever is greater.

6.2.2 For fusion-welded tube, the edges of the strip shall be brought together and welded, usually by a GTAW welding process, without the addition of filler metal, causing a fusion-type joint to be formed with no internal or external flash or bead removal necessary.

6.2.3 Tube type, 4.3, fully finished tube, may be welded and subsequently processed by any method that would produce a tube suitable for subsequent cold-drawing and annealing.

6.2.4 There shall be no crevice in the weld seam visible to the unaided eye.

NOTE 2 — The term "unaided eye" as used herein permits the use of corrective spectacles necessary to obtain normal vision.

7. Chemical Composition

7.1 The material shall conform to the requirements specified in Table 1.

TABLE 1
CHEMICAL REQUIREMENTS

Copper or Copper Alloy UNS No.	Composition, %											
	Copper[A]	Nickel incl Cobalt	Lead, max	Iron	Zinc	Manganese	Aluminum	Phosphorus	Tin	Antimony	Arsenic	Other Elements
C12200	99.9 min	...	...	...	...	...	...	0.015–0.040	...	...	...	...
C19400	97.0–97.8	...	0.03	2.1–2.6	0.05–0.20	...	...	0.015–0.15	...	...	...	...
C23000	84.0–86.0	...	0.05	0.05 max	remainder	...	...	...	...	...	...	...
C44300	70.0–73.0	...	0.07	0.06 max	remainder	...	...	...	0.8–1.2	...	0.02–0.06	...
C44400	70.0–73.0	...	0.07	0.06 max	remainder	...	...	...	0.8–1.2	0.02–0.10	...	...
C44500	70.0–73.0	...	0.07	0.06 max	remainder	...	...	0.02–0.10	0.8–1.2	...	...	...
C68700	76.0–79.0	...	0.07	0.06 max	remainder	...	1.8–2.5	...	...	...	0.02–0.06	...
C70400	remainder	4.8–6.2	0.05	1.3–1.7	1.0 max	0.30–0.8	...	...	...	...	...	...
C70600	remainder	9.0–11.0	0.05[B]	1.0–1.8	1.0 max[B]	1.0 max	...	[B]	...	...	...	[B]
C71500	remainder	29.0–33.0	0.05[B]	0.40–1.0	1.0 max[B]	1.0 max	...	[B]	...	...	...	[B]

[A] Silver counting as copper.

[B] When the product is for subsequent welding applications and so specified by the purchaser, zinc shall be 0.50% max, lead 0.02% max, phosphorus 0.02% max, sulfur 0.02% max, and carbon 0.05% max.

7.2 These specification limits do not preclude the presence of other elements. Limits for unnamed elements may be established by agreement between the manufacturer or supplier and purchaser.

7.2.1 For Copper Alloy UNS No. C19400, copper may be taken as the difference between the sum of all the elements analyzed and 100%. When all the elements in Table 1 are analyzed, their sum shall be 99.8% minimum.

7.2.2 For copper alloys in which copper is specified as the remainder, copper may be taken as the difference between the sum of all the elements analyzed and 100%.

7.2.2.1 *Copper Alloy UNS Nos. C70400, C70600, and C71500* — When all the elements in Table 1 are analyzed, their sum shall be 99.5% minimum.

7.2.3 For copper alloys in which zinc is specified as the remainder, either copper or zinc may be taken as the difference between the sum of all the elements analyzed and 100%.

7.2.3.1 *Copper Alloy UNS No. C23000* — When all the elements in Table 1 are analyzed, their sum shall be 99.8% minimum.

7.2.3.2 *Copper Alloy UNS Nos. C44300, C44400, and C44500* — When all the elements in Table 1 are analyzed, their sum shall be 99.6% minimum.

7.2.3.3 *Copper Alloy UNS No. C68700* — When all the elements in Table 1 are analyzed, their sum shall be 99.5% minimum.

8. Tempers

8.1 Tube tempers shall be designated as follows:

8.1.1 Annealed tempers.

8.1.1.1 Welded and annealed.

8.1.1.2 Fully finished — annealed.

8.1.2 Light cold worked tempers.

8.1.2.1 As-welded from annealed strip.

8.1.2.2 As-welded, light cold worked, and

8.1.2.3 Fully finished — light drawn.

8.2 Other tempers shall be produced to the mechanical properties as agreed upon between the manufacturer or supplier and the purchaser.

8.3 Tubes of Copper Alloy UNS Nos. C23000, C44300, C44400, C44500, and C68700 shall be furnished in the annealed temper or the stress relieved condition as specified in the purchase order unless otherwise agreed upon between the purchaser and the manufacturer or supplier.

8.4 Tubes of Copper Alloy UNS Nos. C12200, C19400, C70400, C70600, and C71500 are normally supplied in the temper specified in the purchase order without stress relief treatment.

NOTE 3 — Some tubes, when subjected to aggressive environments, may be subject to stress-corrosion cracking failure because of the residual tensile stresses developed in straightening. For such applications, it is suggested that tubes of Copper Alloy UNS Nos. C23000, C44300, C44400, C44500, and C68700 be subjected to a stress relieving thermal treatment subsequent to straightening. If required, this must be specified on the purchase order or contract. Tolerances for roundness and length, and the condition of straightness, for tube so ordered, shall be to the requirements agreed upon between the manufacturer and the purchaser.

NOTE 4 — The temper of 8.1.2.2 is to permit the production of a light cold-worked as-welded tube by means other than the use of annealed strip. Some of these, for example, are the use of annealed to temper strip, the use of lightly cold-rolled strip, and the use of cold-rolled strip and wherein the resulting tube is subsequently relief annealed.

9. Mechanical Properties

9.1 Tube specified to meet strength requirements shall have tensile properties as prescribed in Table 2.

10. Microscopical Examination

10.1 Samples of welded and annealed tube and of fully finished annealed tube shall be subjected to microscopical examination at a magnification of 75 diameters.

10.1.1 Forge-welded and annealed tube shall have a completely recrystallized grain structure, and the weld zone shall have a structure typical of hot-forged welds.

10.1.2 Fusion-welded and annealed tube shall have a completely recystallized grain structure, and the weld zone shall have a structure typical of a fusion weld.

10.1.3 Fully finished and annealed tube shall have a completely recrystallized structure typical of the metal when cold-worked and annealed, including the weld zone.

10.2 Samples selected for test shall be examined microscopically at a magnification of 75 diameters to establish that the weld interface is metallurgically sound.

11. Expansion Test

11.1 Tubes supplied in the annealed temper (8.1.1) and the light cold-worked temper (8.1.2) and tubes supplied in the stress relieved condition shall pass the expansion test as specified in 11.2.

11.2 Tube specimens selected for test shall withstand the expansion shown in Table 3 when expanded in accordance with Test Method B 153. The expanded tube shall show no cracking or rupture visible to the unaided eye (see Note 2).

TABLE 2
TENSILE REQUIREMENTS

Copper or Copper Alloy UNS No.	Temper[A]		Tensile Strength, min, ksi[B]	Yield Strength at 0.5 % Extension Under Load, min, ksi[B]
	Designation	Name		
C12200	W061	Annealed	30	9[C]
	WC55	Light cold-worked	32	15
C19400	W061	Annealed	45	15
	WC55	Light cold-worked	45	22
C23000	W061	Annealed	40	12
	WC55	Light cold-worked	42	20
C44300, C44400, C44500	W061	Annealed	45	15
	WC55	Light cold-worked	50	35
C68700	W061	Annealed	50	18
	WC55	Light cold-worked	[D]	[D]
C70400	W061	Annealed	38	12
	WC55	Light cold-worked	40	30
C70600	W061	Annealed	40	15
	WC55	Light cold-worked	45	35
C71500	W061	Annealed	52	18
	WC55	Light cold-worked	54	35

[A] When tempers listed in 8.1.2 are specified in the stress-relieved condition, the same properties as listed above shall apply.
[B] ksi = 1000 psi.
[C] Light straightening operation is permitted.
[D] Where no properties are shown, strength requirements shall be as agreed upon between the purchaser and the manufacturer or supplier.

TABLE 3
EXPANSION REQUIREMENTS

Temper	Copper or Copper Alloy UNS No.	Expansion of Tube Outside Diameter in Percent of Original Outside Diameter
Annealed	C12200	30
	C19400	20
	C23000	20
	C44300, C44400, C44500	20
	C68700	20
	C70400	30
	C70600	30
	C71500	30
Light cold-worked	C12200	20
	C19400	20
	C70400	20
	C70600	20
	C71500	20
Annealed and light cold-worked, stress relieved	C23000	20
	C44300, C44400, C44500	20
	C68700	20

12. Flattening Test

12.1 Test specimens at least 4 ft in length shall be flattened on different elements throughout the length remaining after specimens for the expansion and metallographic tests have been taken. Each element shall be slowly flattened by one stroke of a press. The term "flattened" shall be interpreted as follows: A micrometer caliper set at three times the wall thickness shall pass over the tube freely throughout the flattened part except at the points where the change in element of flattening takes place. The flattened elements shall not show cracking or rupture visible to the unaided eye (Note 2). The weld when visible or identifiable shall be placed in the position of maximum bend on one half of the flattened elements. When tubes are specified in a temper other than annealed (8.1.1), this test is required and may be made on annealed specimens.

13. Reverse Bend Test

13.1 A section 4 in. in length shall be split longitudinally 90° on each side of the weld. The sample shall then be opened and bent around a mandrel with a diameter four times the wall thickness, with the mandrel parallel to the weld and on the outside of the tube. The weld when visible or identifiable shall be at the point of maximum bend. There shall be no evidence of cracks, or lack of penetration in the weld, or of overlaps resulting from flash removal visible to the unaided eye (Note 2). When tubes are specified in a temper other than annealed (8.1.1), this test is required and may be made on annealed specimens.

14. Mercurous Nitrate Test

14.1 Warning — Mercury is a definite health hazard and therefore equipment for the detection and removal of mercury vapor produced in volatilization is recommended. The use of rubber gloves in testing is advisable.

14.2 The test specimens, cut 6 in. in length, shall withstand, without cracking, an immersion in the standard mercurous nitrate solution prescribed in Test Method B 154. The test specimens shall include the finished tube end. The mercurous nitrate test is required for Copper Alloy UNS Nos. C23000, C44300, C44400, C44500, and C68700 in the stress-relieved condition for tempers listed in 8.1.2.1, 8.1.2.2, and 8.1.2.3.

15. Nondestructive Testing

15.1 Each tube shall be subjected to an eddy-current test in 15.1.1. Fully finished tube (see 4.3) may be tested in the final drawn, annealed, or heat-treatment temper or in the drawn temper prior to the final anneal or heat treatment, unless otherwise agreed upon between the manufacturer or supplier and the purchaser. Tube supplied welded and annealed (see 4.2) may be tested in the welded condition before anneal or heat treatment, unless otherwise agreed upon between the manufacturer or supplier and the purchaser. The purchaser may specify either of the tests in 15.1.2 or 15.1.3 as an alternative to the eddy-current test.

TABLE 4
NOTCH DEPTH

Tube Wall Thickness, in.	Tube Outside Diameter, in.		
	Over 1/4 to 3/4, incl	Over 3/4 to 1 1/4, incl	Over 1 1/4 to 3 1/8, incl.
Over 0.017–0.032	0.005	0.006	0.007
Incl. 0.032–0.049	0.006	0.006	0.0075
Incl. 0.049–0.083	0.007	0.0075	0.008
Incl. 0.083–0.109	0.0075	0.0085	0.0095
Incl. 0.109–0.120	0.009	0.009	0.011

15.1.1 *Eddy Current Test* — Each tube shall be passed through an eddy-current testing unit adjusted to provide information on the suitability of the tube for the intended application. Testing shall follow the procedures of Practice E 243, except as modified in 15.1.1.2.

15.1.1.1 The depth of the round-bottom transverse notches and the diameters of the drilled holes in the calibrating tube used to adjust the sensitivity of the test unit are shown in Table 4 and Table 5 respectively.

15.1.1.2 The discontinuities used to calibrate the test system may be placed in the strip from which the tube will be manufactured. These calibration discontinuities will pass through the continuous operations of forming, welding, and eddy-current testing. The test unit sensitivity required to detect the resultant discontinuities shall be equivalent to or greater than that required to

TABLE 5
DIAMETER OF DRILLED HOLES

Tube Outside Diameter, in.	Diameter of Drilled Holes, in.	Drill No.
1/4 to 3/4, incl	0.025	72
Over 3/4 to 1, incl	0.031	68
Over 1 to 1 1/4, incl	0.036	64
Over 1 1/4 to 1 1/2, incl	0.042	58
Over 1 1/2 to 1 3/4, incl	0.046	56
Over 1 3/4 to 2, incl	0.052	55

detect the notches or drilled holes of Table 4 and Table 5 respectively, or other calibration discontinuities that may be used by mutual agreement between the manufacturer or supplier and the purchaser. Calibration discontinuities may be on the outside tube surface, the internal tube surface, or through the tube wall and shall be spaced to provide signal resolution adequate for interpretation. Each calibration discontinuity shall be detected by the eddy-current tester.

15.1.1.3 Tubes that do not actuate the signaling device of the eddy-current tester shall be considered as conforming to the requirements of this test. Tubes causing irrelevant signals because of moisture, soil, and like effects may be reconditioned and retested. Such tubes, when retested to the original test parameters, shall be considered to conform if they do not cause output signals beyond the acceptable limits. Tubes causing irrelevant signals because of visible and identifiable handling marks may be retested by the hydrostatic test prescribed in 15.1.2, or the pneumatic test prescribed in 15.1.3. Tubes meeting requirements of either test shall be considered to conform if the tube dimensions are within the prescribed limits, unless otherwise agreed to by the manufacturer or supplier and the purchaser.

15.1.2 *Hydrostatic Test* — When specified, each tube selected in accordance with 15.1 shall withstand, without showing evidence of leakage, an internal hydrostatic pressure sufficient to subject the material to a fiber stress of 7000 psi, determined by the following equation for thin hollow cylinders under tension. The tube need not be tested at a hydrostatic pressure of over 1000 psig, unless so specified.

$$P = 2St/(D - 0.8t)$$

where:

P = hydrostatic pressure, psig,
t = wall thickness of tube wall, in.,
D = outside diameter of the tube, in., and
S = allowable stress of the material, psi.

15.1.3 *Pneumatic Test* — When specified, each tube shall be subjected to an internal air pressure of 60 psig minimum for 5 s without showing evidence of leakage. The test method used shall permit easy visual detection of any leakage such as by having the tube under water or by the pressure-differential method. Any evidence of leakage shall be cause for rejection.

16. Dimensions and Permissible Variations

16.1 *Diameter* — The outside diameter of the tubes shall not vary from that specified by more than the amounts shown in Table 6 as measured by "go" and "no-go" ring gages. Where no values are shown in the table, dimensions shall be as agreed upon between the purchaser and the manufacturer or supplier.

16.2 *Wall Thickness Tolerances:*

16.2.1 *Tubes Ordered to Minimum Wall* — No tube at its thinnest point shall be less than the specified wall thickness or greater than the specified wall thickness plus twice the tolerance values shown in Table 7.

16.2.2 *Tubes Ordered to Nominal Wall* — The maximum plus and minus deviation from the nominal wall at any point shall not exceed the values shown in Table 7.

16.3 *Length* — The length of the tubes shall not be less than that specified when measured at a temperature of 20°C, but may exceed the specified value by the amounts given in Table 8.

16.4 *Squareness of Cut* — The departure from squareness of the end of any tube shall not exceed the values shown in Table 9.

NOTE 5 — For the purpose of determining conformance with the dimensional requirements prescribed in this specification, any measured value outside the specified limiting values for any dimension may be cause for rejection.

17. Workmanship, Finish, and Appearance

17.1 Roundness, straightness, uniformity of the wall thickness, and inner and outer surface of the tube shall be such as to make it suitable for the intended application. Unless otherwise specified on the purchase order, the cut ends of the tubes shall be deburred by use of a rotating wire wheel or other suitable tool.

17.2 Welded and annealed, fully finished annealed, or stress-relieved tubes shall be clean and smooth but may have a superficial, dull iridescent film on both the inside and the outside surfaces. All other tubes shall be clean and smooth but may have a superficial film of drawing or other lubricant on the surfaces.

18 Sampling

18.1 *Sampling* — The lot size, portion size, and selection of sample pieces shall be as follows:

18.1.1 *Lot Size* — 600 tubes or 10 000 lb or a fraction of either, whichever constitutes the greater weight.

18.1.2 *Portion Size* — Sample pieces from two individual lengths of finished product.

18.2 Samples taken for the purpose of the tests prescribed in the specification shall be selected in a manner

TABLE 6
DIAMETER TOLERANCES

Outside Diameter, in.	Wall Thickness, in.				
	0.020[A] 0.022 0.025 0.028	0.032	0.035	0.042	0.049 and Over
	Diameter Tolerance, Plus and Minus, in.				
Up to 0.500, incl	0.003	0.0025	0.0025	0.0025	0.0025
Over 0.500–0.740, incl	0.004	0.004	0.004	0.0035	0.003
Over 0.740–1.000, incl	0.006	0.006	0.005	0.0045	0.004
Over 1.000–1.250, incl	...	0.009	0.008	0.006	0.0045
Over 1.250–1.375, incl	...	...	...	0.008	0.005
Over 1.375–2.000, incl	...	...	...	...	0.006
Over 2.000–3.125, incl	...	...	...	...	0.0065

[A] Thin wall thicknesses are supplied only in light cold-worked tubes.

TABLE 7
WALL THICKNESS TOLERANCES

Wall Thickness, in	Outside Diameter, in.			
	Over 1/8 to 5/8, incl	Over 5/8 to 1, incl	Over 1 to 2, incl	Over 2 to 3.125, incl
	Wall Thickness Tolerances, Plus and Minus, in.			
0.020 incl. to 0.032	0.003	0.003	...	...
0.032 incl. to 0.035	0.003	0.003	0.004	...
0.035 incl. to 0.058	0.004	0.0045	0.0045	0.005
0.058 incl. to 0.083	0.0045	0.005	0.005	0.0055
0.083 incl. to 0.120	0.005	0.0065	0.0065	0.0065
0.120 incl. to 0.135	0.007	0.007	0.0075	0.008

TABLE 8
LENGTH TOLERANCES

Specified length, ft	Tolerance, all Plus, in.
Up to 15	3/32
Over 15–20, incl	1/8
Over 20–30, incl	5/32
Over 30–60, incl	3/8
Over 60–100, incl[A]	1/2

[A] Condenser tubes in lengths over 100 ft are not in present demand. Tolerance values for these lengths will be developed as experience dictates. Tolerance values for lengths in wall thicknesses of 0.020, incl to 0.032 shall be agreed upon between the manufacturer or supplier and the purchaser.

that will represent correctly the material furnished and avoid needless destruction of finished material when samples representative of the material are available from other sources.

18.3 *Chemical Analysis* — Samples for chemical analysis shall be taken and prepared in accordance with Practice E 55. Drillings, millings, etc., shall be taken in approximately equal weight from each of the sample pieces selected in accordance with 18.1.2 and combined into one composite sample. The minimum weight of the composite sample that is to be divided into three equal parts shall be 150 g.

18.3.1 Instead of sampling in accordance with Practice E 55, the manufacturer shall have the option of determining conformance to chemical composition as follows: Conformance shall be determined by the manufacturer by analyzing samples taken at the time the castings are poured or samples taken from the semi-finished product. If the manufacturer determines the chemical composition of the material during the course of manufacture, he shall not be required to sample and analyze the finished product. The number of samples taken for determination of chemical composition shall be as follows:

18.3.1.1 When samples are taken at the time the castings are poured, at least one sample shall be taken for each group of castings poured simultaneously from the same source of molten metal.

TABLE 9
SQUARENESS OF CUT

Tube Outside Diameter, in.	Tolerance
Up to 5/8, incl	0.010 in.
Over 5/8	0.016 in./in. of diameter

18.3.1.2 When samples are taken from the semi-finished product, a sample shall be taken to represent each 10 000 lb or fraction thereof, except that not more than one sample shall be required per piece.

18.3.2 Due to the discontinuous nature of the processing of castings into wrought products, it is not practical to identify specific casting analysis with a specific quantity of finished material.

18.3.3 In the event that heat identification or traceability is required, the purchaser shall specify the details desired.

19. Number of Tests and Retests

19.1 *Tension Tests* — When tensile strength is specified, two tubes shall be selected from each lot and subjected to the tension test which shall, in case of disagreement, be made in accordance with Test Methods E 8.

19.2 *Other Tests* — For tests specified in Sections 10 to 14 inclusive, specimens shall be taken from each of the pieces selected in accordance with 18.1.

19.3 If any test specimen representing a lot fails to conform to the requirements of Sections 7, 10, 11, 12, 13, and 14, two additional specimens, at the option of the manufacturer, may be taken as before, and submitted for check analysis or subjected to any tests in which the original specimen failed, but each of these specimens shall conform to the requirements specified.

20. Test Methods

20.1 The properties and chemical compositions enumerated in this specification shall, in case of disagreement, be determined in accordance with the following test methods:

Test	ASTM Designation
Chemical analysis	E 53, E 54, E 62, E 75, E 478
Grain size	E 112
Expansion (pin test)	B 153
Mercurous nitrate	B 154
Tension	E 8

20.2 Tension test specimens shall be of the full section of the tube and shall conform to the requirements of the Significance and Use Section of Test Methods E 8, unless the limitations of the testing machine preclude the use of such a specimen. Test specimens conforming to type No. 1 of Fig. 13, Tension Test Specimens for Large-Diameter Tubular Products, of Test Methods E 8 may be used when a full section specimen cannot be tested.

20.3 Whenever tension test results are obtained from both full size and machined test specimens and they differ, the results obtained from full-size test specimens shall be used to determine conformance to the specification requirements.

20.4 Tension test results on material covered by this specification are not seriously affected by variations in speed of testing. A considerable range of testing speed is permissible; however, the range of stressing to the yield strength should not exceed 100 ksi/min. Above the yield strength the movement per minute of the testing machine head under load should not exceed 0.5 in./in. of gage length (or distance between grips for full-section specimens).

20.5 The surface of the test specimen for microscopical examination of grain size shall approximate a radial longitudinal section of the tube.

20.6 The surface of the test specimen for microscopical examination of the weld interface shall approximate a transverse section of the tube.

21. Significance of Numerical Limits

21.1 For purposes of determining compliance with the specified limits for requirements of the properties listed in the following table, an observed value or a calculated value shall be rounded as indicated in accordance with the rounding method of Practice E 29.

Property	Rounded Unit for Observed or Calculated Value
Chemical composition	Nearest unit in the last right-hand place of figures
Tensile strength and yield strength	Nearest ksi (up to 10 ksi, over 10 to 100 ksi, incl)
Elongation	Nearest 1%
Grain size	Nearest multiple of 0.005 mm

22. Inspection

22.1 The manufacturer shall afford the inspector all reasonable facilities to satisfy him that the tubes being furnished are in accordance with this specification. All tests (except check analysis) and inspection shall be made at the place of manufacture, prior to shipment, unless otherwise specified, and shall be so conducted as not to interfere unnecessarily with the operation of the works.

23. Rejection and Rehearing

23.1 Material that fails to conform to the requirements of this specification when inspected or tested by the purchaser or his agent may be rejected. Rejection should be reported to the manufacturer or supplier promptly and in writing. In case of dissatisfaction with the results of the test, the manufacturer or supplier may make claim for a rehearing.

24. Certification

24.1 A manufacturer's certificate of compliance shall be furnished to the purchaser stating that each lot has been sampled, tested, and inspected in accordance with this specification and the requirements have been met.

25. Packaging and Package Marking

25.1 The material shall be separated by size, composition, and temper, and prepared for shipment in such a manner as to ensure acceptance by common carrier for transportation and to afford protection from the normal hazards of transportation.

25.2 Each shipping unit shall be legibly marked with the purchase order number, metal or alloy designation, temper, size, shape, total length or piece count or both, and name of supplier. The specification number shall be shown when specified.

26. Test Report

26.1 When specified in the purchase order or contract, the manufacturer or supplier shall furnish to the purchaser a manufacturer's test report showing the results of the required tests.

27. Keywords

27.1 condenser; copper; copper alloy; copper nickel; evaporator; heat exchanger tube; welded

APPENDIX

(Nonmandatory Information)

X1. DENSITY OF COPPER AND COPPER ALLOYS

X1.1 The densities of the alloys covered by this specification are given in Table X1.1.

TABLE X1.1
DENSITIES

Copper or Copper Alloy UNS No.	Density, lb/in.^{3}
C12200	0.323
C19400	0.322
C23000	0.316
C44300, C44400, C44500	0.308
C68700	0.301
C70400, C70600, C71500	0.323

SPECIFICATION FOR ULTRASONIC INSPECTION OF ALUMINUM-ALLOY PLATE FOR PRESSURE VESSELS

SB-548

(Identical with ASTM Specification B 548-90.)

1. Scope

1.1 This method covers pulse-echo ultrasonic inspection of aluminum-alloy plate of thickness equal to or greater than 0.500 in. (12.7 mm) for use in the fabrication of pressure vessels. The ultrasonic test is employed to detect gross internal discontinuities oriented in a direction parallel to the rolled surface such as cracks, ruptures, and laminations, and to provide assurance that only plate that is free form rejectable discontinuities is accepted for delivery.

1.2 The inspection method and acceptance criteria included in this standard shall be limited to plate of the following aluminum alloys: 1060, 1100, 3003, Alclad 3003, 3004, Alclad 3004, 5050, 5052, 5083, 5086, 5154, 5254, 5454, 5456, 5652, 6061, and Alclad 6061.

1.3 This method applies only to ultrasonic tests using pulsed longitudinal waves which are transmitted and received by a search unit containing either a single crystal or a combination of electrically interconnected multiple crystals. Ultrasonic tests employing either the through-transmission or the angle-beam techniques are not included.

1.4 This method shall be used when ultrasonic inspection as prescribed herein is required by the contract, purchase order, or referenced plate specification.

1.5 The values stated in inch-pound units are the standard. The SI values in parentheses are for information only.

1.6 *This standard may involve hazardous materials, operations, and equipment. This standard does not purport to address all of the safety problems associated with its use. It is the responsibility of the user of this standard to establish appropriate safety and health practices and determine the applicability of regulatory limitations prior to use.*

2. Referenced Documents

2.1 The following documents of the issue in effect on date of material purchase form a part of this specification to the extent referenced herein:

2.1 *ASTM Standards:*

E 114 Practice for Ultrasonic Pulse-Echo Straight-Beam Examination by the Contact Method

E 214 Practice for Immersed Ultrasonic Examination by the Reflection Method Using Pulsed Longitudinal Waves

E 317 Practice for Evaluating Performance Characteristics of Ultrasonic Pulse-Echo Testing Systems Without the Use of Electronic Measurement Instruments

2.1.2 *Other Standard:*

ASNT Recommended Practice for Nondestructive Testing Personnel Qualification and Certification — Ultrasonic Testing Method — SNT-TC-1A.

3. Summary of Method

3.1 The plate is inspected ultrasonically by scanning one rolled surface with a beam of pulsed longitudinal waves which is oriented in a direction perpendicular to the entry surface of the plate. The ultrasound is transmitted into the plate either by the direct contact, immersion, or liquid-column coupling method. During the scan, an indication representing the first back reflection is observed on the A-scan screen of the test instrument.

3.2 When the test system sensitivity level is appropriately adjusted, a discontinuity is detected during the scan by noting an isolated indication associated with a loss of

the first back reflection indication. The apparent size of the discontinuity is determined by measuring the total area in the scanned entry surface of the plate where the isolated indication and the loss of back reflection persist. The estimated discontinuity size and location are then compared with suitable acceptance criteria.

NOTE 1 — Additional information describing ultrasonic tests by the direct contact method and by the immersion method is available in Practices E 114 and E 214.

4. Significance and Use

4.1 A number of factors such as the condition of the entry and back surfaces of the plate, the inclination of the ultrasonic beam with respect to the entry surface, and the performance characteristics of the test system may cause either a reduction of isolated indications or a substantial loss of back reflection and thereby could seriously impair the reliability of the test procedure outlined in this standard.

4.2 Accurate evaluations of discontinuity size also may be limited significantly by variations in beam characteristics which exist in most search units. For this reason, discontinuity size as determined by the test procedure outlined in this method is regarded as "apparent" or "estimated" in recognition of the limited quantitative value of the measurement.

4.3 Because a large number of interacting variables in a test system can adversely influence the results of an ultrasonic test, the actual quantitative effects of deteted discontinuities upon the mechanical properties of the inspected plate are difficult to establish. Consequently, this ultrasonic inspection method is not applicable as an exclusive indicator of the ultimate quality and performance of pressure vessels but provides a reliable control of plate quality to avoid failure during the forming process for fabrication of vessels.

5. Apparatus

5.1 *Test Instrument* — Any electronic device that produces pulsed longitudinal waves and displays ultrasonic reflections on an A-scan indicator when used with an appropriate search unit is satisfactory. The instrument shall provide stable, linear amplification of received pulses at a selected test frequency and shall be free from significant interface signal interference at the required sensitivity level.

5.2 *Search Unit* — The search unit recommended for this standard is the flat nonfocusing type, and contains a piezo-electric crystal which generates and receives longitudinal waves at the rated frequency when connected to the test instrument through a suitable coaxial cable. A dual-crystal search unit containing both a transmitting and a receiving crystal in one container may be used provided the test instrument will accommodate two-crystal operation and the resulting pulse-echo test is equivalent to that obtained with a search unit containing a single-crystal.

5.2.1 The total effective area of the crystal or combination of crystals in the search unit used for initial scanning shall not be less than 0.4 in.^{2} (2.6 cm^2) nor greater than 3.0 in.^{2} (19.4 cm^2).

5.2.2 The effective diameter of the round search unit used to evaluate discontinuity size shall not exceed 0.75 in. (19 mm).

NOTE 2 — For control purposes, the performance characteristics of the test instrument and search unit may be established in accordance with procedures outlined in Practice E 317.

5.3 *Tank* — For tests by the immersion method, any container is satisfactory that will facilitate the accurate, stable positioning of both the search unit and the plate to be inspected.

5.4 *Scanning Apparatus* — During the inspection procedure, the search unit is supported by any one of the following devices. The scanning apparatus shall permit measurement of both the scan distance and the index distance within ± 0.1 in. (± 2 mm).

5.4.1 *Manipulator and Bridge* — When a manipulator is used in tests by the immersion method, the manipulator shall adequately support a search tube containing a search unit and shall provide fine adjustment of angle within 1 deg. in two vertical planes that are perpendicular to each other. The bridge shall be of sufficient strength to provide rigid support for the manipulator and shall allow smooth, accurate positioning of the search unit. Special search unit supporting fixtures may be used provided they meet the requirements prescribed for a manipulator and bridge.

5.4.2 *Liquid Coupling Nozzle* — For tests by the liquid-column coupling method, the nozzle is usually positioned manually and shall be capable of containing the couplant while rigidly supporting the search unit with its active surface immersed in the couplant. The couplant distance shall be maintained so that the second couplant reflection is to the right of the first back reflection on the instrument cathode ray tube (CRT). The couplant path shall not vary more than ±¼ in. (6.4 mm) during calibration, initial scanning, and discontinuity evaluation. The recommended minimum inside dimension of the nozzle is 1.0 in. (25 mm) greater than the maximum dimension of the crystal surface in the search unit. Provisions also

should be included for adjustment of search unit inclination within 1 deg. in two vertical planes that are perpendicular to each other.

NOTE 3 — Nozzles containing either sealed or unsealed openings may be used for inspecting plate provided the test results obtained with either device are equivalent to those obtained by the immersion method.

5.4.3 *Contact Scanning Unit* — During tests by the contact method, the search unit is supported and positioned manually on the entry surface of the inspected plate. However, special fixtures for contact scanning may be employed provided their use ensures conformance to the requirements in this specification.

5.5 *Couplant* — Clean, deaerated water at room temperature is the recommended couplant for tests either by the immersion method or by the liquid-column coupling technique. Inhibitors or wetting agents or both may be used. For tests by the contact method, the recommended couplant is clean, light-grade oil.

NOTE 4 — Other coupling liquids may be employed for inspecting plate provided their use does not adversely affect test results.

6. Personnel Requirements

6.1 The testing operator performing the ultrasonic examination prescribed in this standard shall be qualified and certified to Level I — Ultrasonic Testing in accordance with the ASNT Recommended Practice SNT-TC-1A.

6.2 The required documentation supporting qualification and certification of ultrasonic testing operators shall be established by the certifying agency and shall be available upon request by the purchaser.

7. Condition of Plate

7.1 The entry and back surfaces of the inspected plate shall be sufficiently clean, smooth, and flat to maintain a first back reflection amplitude greater than 50% of the initial standardization amplitude while scanning an area in the plate that does not contain significant isolated ultrasonic discontinuities.

7.2 The inspected plate shall be at room temperature during the test.

8. Procedure

8.1 *Preferred Method* — The ultrasonic test may be performed by either the liquid column coupling, the direct contact, or the immersion methods. However, the immersion method is preferred.

8.1.1 Maintain the couplant distance so that the second couplant reflection is to the right of the first back reflection on the instrument cathode ray tube (CRT). The couplant path shall not vary more than $\pm 1/4$ in. (6.4 mm) during calibration, initial scanning, and discontinuity evaluation.

8.2 *Test Frequency* — When using any of the three methods listed in 8.1, the recommended test frequency is 5.0 MHz. Other test frequencies between 2.0 MHz and 10.0 MHz may be employed when necessary to minimize possible adverse effects of plate thickness, microstructure, and test system characteristics upon test results and thereby maintain a clean, easily interpreted A-scan screen pattern throughout the inspection.

8.3 *Sensitivity Standardization* — Standardize the sensitivity level of the test system operating at the selected frequency by adjusting the instrument gain control to obtain a first back reflection amplitude of 75 ± 5% of the vertical limit exhibited by the A-scan indicator when the search unit is positioned over an area free from significant discontinuities in the plate to be inspected. During test by either the immersion method or the liquid column coupling method, adjust the angular alignment of the search unit to obtain a maximum number of back reflections before the final sensitivity level is established.

8.4 *Scanning* — With no further adjustments of the instrument gain controls, locate the search unit over one corner of the plate to be inspected so that the edge of the crystal in the search unit is about 1 in. (25 mm) from either edge of the plate.

8.4.1 Subsequent to checking the angular alignment of the search unit with respect to the rolled entry surface to ensure a maximum first back reflection, proceed to scan the plate continuously by moving the search unit at a constant scanning rate not exceeding 12 in. (305 mm)/s from the initial starting position to the opposite edge in a direction perpendicular to the predominant rolling direction of the plate.

8.4.2 During the scan, note the occurrence of isolated discontinuity indications and monitor the amplitude of the first back reflection by continuously observing the A-scan indicator screen.

NOTE 5 — Auxiliary monitoring devices may be employed in the test system to enhance detection reliability during the scan.

8.5 *Scan Index* — When the initial scan is completed, move the search unit over a predetermined scan index distance in a direction parallel to the predominant rolling direction of the plate and proceed with a second scan along a line parallel to the initial scanning direction while observing the test pattern on the A-scan indicator screen.

Calculate the scan index distance as follows:

$$\text{Scan index distance (in.), } S_i = 0.8 + D_s$$

$$\text{Scan index distance (mm), } S_i = 20 + 0.7\ D_s$$

where:

D_s = actual crystal diameter.

8.5.1 Continue the inspection by constantly observing the test pattern on the A-scan indicator while successively scanning the plate at a constant scanning rate in a direction perpendicular to the predominant rolling direction of the plate and indexing the search unit through the index distance calculated in 8.5.

8.5.2 During the inspection procedure, check the test system sensitivity standardization periodically by noting the amplitude the the first back reflection when the search unit is repositioned over the reference area of the plate and by adjusting the instrument gain control as required to maintain the sensitivity standardization specified previously in 8.3.

8.6 *Scanning Rate* — When the screen pattern on the A-scan indicator is monitored visually by the test operator during the inspection, the scanning rate shall not be greater than 12 in./s.

NOTE 6 — Scanning rates greater than 12 in./s may be employed if auxiliary monitoring apparatus is used to maintain adequate detection reliability.

8.7 *Detection of Discontinuities* — When an isolated ultrasonic indication of amplitude greater than 30% of the A-scan vertical limit is encountered or when the first back reflection indication decreases to an amplitude less than 5% of the vertical limit at any time during the inspection procedure, stop the scan and angulate the search unit to obtain a maximum isolated indication and to determine that the loss of back reflection is not caused by misalignment of the search unit with respect to the plate.

8.7.1 To ensure that the loss of back reflection is not caused by surface interference, check the condition of both the entry and back surfaces of the plate at the location where a substantial (95% or greater) loss of back reflection occurs.

8.7.2 Either a maximized isolated ultrasonic indication exhibiting an amplitude greater than 50% of the amplitude of the initial first back reflection used for standardization, or a substantial loss of the first back reflection indication not attributable to either search unit misalignment or surface interference, is an indication of an internal discontinuity.

NOTE 7 — Isolated indications occurring midway between the entry surface indication and the first back reflection may cause a second indication at the location of the first back reflection on the A-scan screen. When this condition is verified by checking the multiple back reflection pattern, a complete loss of the first back reflection can be assumed.

8.8 *Estimation of Discontinuity Size* — Note the location of the search unit where the scan was stopped when either an isolated indication or a loss of back reflection was observed.

8.8.1 Using a search unit containing a crystal of effective diameter no greater than 0.75 in. (19 mm), make an evaluation scan of an entire 6-in. (152 mm) square area which is centered around the point on the plate entry surface where the scan was discontinued. The recommended index distance for this evaluation is as follows:

$$S_i \text{ (in. or mm)} = 0.7\ D_s\ ,$$

where:

D_s = is the actual diameter of the search unit crystal.

8.8.2 To determine the apparent size of the discontinuity, mark each location corresponding to the center of the search unit on the plate entry surface where a 95 ± 5% loss of first back reflection is observed or where the isolated indication exhibits an amplitude equal to 50 ± 5% of the amplitude of the initial first back reflection established during the standardization procedure outlined in 8.3.

8.8.3 Continue to mark the location of the search unit at each point where either or both of the discontinuity conditions specified in paragraph 8.8.2 are observed. The entire discontinuity shall be outlined even if it extends beyond the original 6-in. (152-mm) square evaluation scan area.

8.8.4 The estimated discontinuity size is the area defined by the boundary consisting of successive marks as established by this procedure.

NOTE 8 — Automatic recording devices may be used to establish the estimated size of a discontinuity provided the recorded results are equivalent to those obtained by the procedure presented in 8.8.

8.9 When the estimated size of a detected discontinuity is determined, return the search unit to the original stopping position and continue the initial scan to complete the inspection.

9. Acceptance Standards

9.1 Upon completing the inspection procedure, measure the longest dimension of each marked area representing a detected discontinuity. Also, when an engineering drawing showing the part to be fabricated from the plate is supplied, compare the locations of the discontinuities with the dimensions on the drawing.

9.2 If the longest dimension of the marked area representing a discontinuity causing a complete loss of back reflection (95% or greater) exceeds 1.0 in. (25 mm), the discontinuity is considered to be significant and the plate shall be subject to rejection.

9.3 If the length of the marked area representing a discontinuity causing an isolated ultrasonic indication without a complete loss of back reflection (95% or greater) exceeds 3.0 in. (76 mm), the discontinuity is considered to be significant and the plate shall be subject to rejection.

9.4 If each of two marked areas representing two adjacent discontinuities causing isolated ultrasonic indications without a complete loss of back reflection (95% or greater) is longer than 1.0 in., and if they are located within 3.0 in. of each other, the proximity between the two discontinuities is considered to be significant, and the plate shall be subject to rejection.

NOTE 9 — A template containing a 1.0-in. diameter hole and a 3.0-in. diameter hole is a convenient device for rapidly establishing the significance of discontinuities. If the discontinuities described in 9.2 and 9.3 cannot be totally enclosed within either the 1.0-in. diameter circle or the 3.0-in. diameter circle, respectively, then the plate containing such discontinuities shall be subject to rejection. Similarly, if any portions of two adjacent discontinuities greater than 1.0 in. in length as in accordance with 9.4 appear within the 3.0-in. diameter circle, the plate shall be subject to rejection.

9.5 A plate containing significant discontinuities of rejectable size shall be acceptable if it is established by the purchaser that the discontinuities will be removed from the plate by machining during the subsequent fabrication process.

9.6 Upon specific consent of the purchaser, a plate with significant discontinuities may be accepted if repaired by welding.

10. Report

10.1 When required by the purchaser, a report shall be prepared and shall include the date of test and a list of parameters including the type (model number) of instrument and search unit, the test method, frequency, and the couplant employed for the inspection.

10.2 Preparation of a drawing showing the location of all significant discontinuities in the inspected plate is recommended when the ultimate rejection or acceptance of the plate is to be determined by negotiation between the manufacturer and the purchaser.

10.3 The identification of an acceptable plate is desirable and is recommended. For this purpose, a suitable stamp should be employed to indicate conformance to this ultrasonic standard. The recommended stamp for identifying acceptable plate is shown in Fig. 1.

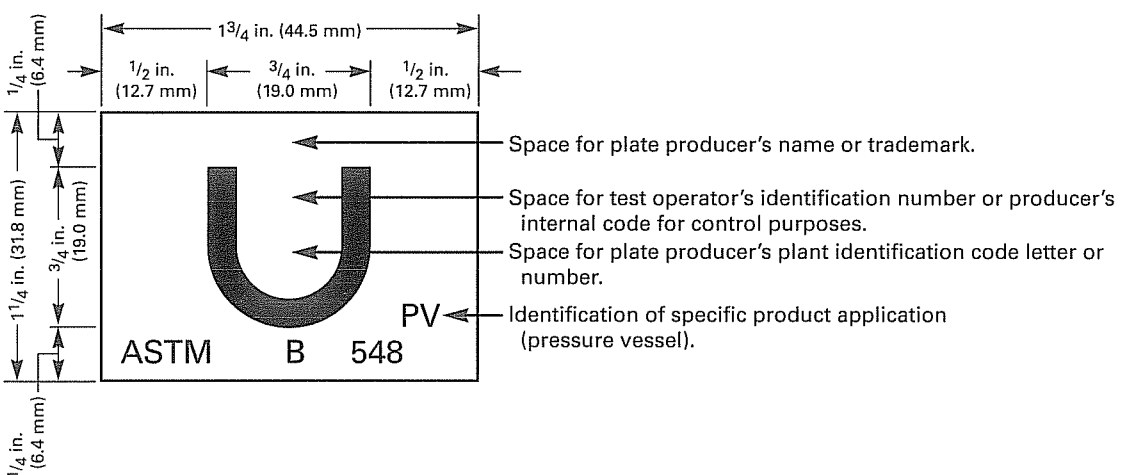

FIG. 1 STAMP FOR IDENTIFYING ACCEPTABLE PLATE

SPECIFICATION FOR ZIRCONIUM AND ZIRCONIUM ALLOY BAR AND WIRE

SB-550/SB-550M

(Identical with ASTM Specification B 550/B 550M-01 except for section 16.1, which requires mandatory certification.)

1. Scope

1.1 This specification covers three grades of zirconium and zirconium alloy bar and wire.

1.2 Unless a single unit is used, for example corrosion mass gain in mg/dm^2, the values stated in either inch-pound or SI units are to be regarded separately as standard. The values stated in each system are not exact equivalents; therefore each system must be used independently of the other. SI values cannot be mixed with inch-pound values.

1.3 The following precautionary caveat pertains only to the test methods portions of this specification. *This standard does not purport to address all of the safety concerns, if any, associated with its use. It is the responsibility of the user of this standard to establish appropriate safety and health practices and determine the applicability of regulatory limitations prior to use.*

2. Referenced Documents

2.1 *ASTM Standards:*

E 8 Test Methods for Tension Testing of Metallic Materials

E 29 Practice for Using Significant Digits in Test Data to Determine Conformance with Specifications

3. Terminology

3.1 *Definitions of Terms Specific to This Standard:*

3.1.1 *annealed* — denotes material that exhibits a recrystallized grain structure.

3.2 *Lot Definitions:*

3.2.1 *castings* — a lot shall consist of all castings produced from the same pour.

3.2.2 *ingot* — no definition required.

3.2.3 *rounds, flats, tubes, and wrought powder metallurgical products (single definition, common to nuclear and non-nuclear standards)* — a lot shall consist of a material of the same size, shape, condition, and finish produced from the same ingot or powder blend by the same reduction schedule and the same heat treatment parameters. Unless otherwise agreed between manufacturer and purchaser, a lot shall be limited to the product of an 8 h period for final continuous anneal, or to a single furnace load for final batch anneal.

3.2.4 *sponge* — a lot shall consist of a single blend produced at one time.

3.2.5 *weld fittings* — definition is to be mutually agreed upon between manufacturer and the purchaser.

4. Classification

4.1 The bar or wire is to be furnished in three grades as follows:

4.1.1 *Grade R60702* — Unalloyed zirconium.

4.1.2 *Grade R60704* — Zirconium-tin.

4.1.3 *Grade R60705* — Zirconium-niobium.

5. Ordering Information

5.1 Orders for material under this specification should include the following information:

5.1.1 Quantity (weight or number of pieces),

5.1.2 Name of material (zirconium bar or wire) (Table 1),

5.1.3 Grade number (see 4.1),

5.1.4 ASTM designation and year of issue, and

TABLE 1
PRODUCT SECTIONS AND SIZE

Product	Section	Size
Bars:	Hot-finished round, squares, octagons, and hexagons	1/4 in. (6.4 mm) and over in diameter or size
	Hot-finished flats	1/4 in. (6.4 mm) to 10 in., incl (250 mm), in width, and 1/8 in. (3.2 mm) and over in thickness
	Cold-finished rounds, squares, octagons, hexagons, and shapes	Over 1/2 in. (13 mm) in diameter or size[A]
	Cold-finished flats	3/8 in. (9.5 mm) and over in width,[B] and 1/8 in. (3.2 mm) and over in thickness[C]
Wire:	Cold-finished rounds, squares, octagons, hexagons, and shapes	1/2 in. (13 mm) and under in diameter or size
	Cold-finished flats	1/16 in. (1.6 mm) to under 3/8 in. (9.5 mm) in width, and 0.010 in. (0.25 mm) to under 3/16 in. (4.8 mm) in thickness

[A] Sizes 1/2 in. (13 mm) and under are wire when in coils, and cut wire when finished in straight lengths.
[B] Widths less than 3/8 in. (9.5 mm) and thicknesses less than 3/16 in. (4.8 mm) are generally described as flat wire.
[C] Thickness 1/8 in. (3.2 mm) to under 3/16 in. (4.8 mm) can be cold-rolled strip as well as bar.

TABLE 2
CONDITION

Form	Condition
Bars	hot finished
	hot annealed
	cold finished
	cold finished and annealed
Wire	cold finished
	cold finished and annealed

5.1.5 Additions to the specification and supplementary requirements, if required.

NOTE 1 — A typical ordering description is as follows: 1000 lb (500 kg) zirconium cold drawn bar, 0.35 in. (10 mm) in diameter by 10 ft (3 m) in length, ASTM B 550 dated ——, Grade R60702.

6. Materials and Manufacture

6.1 Bar and wire covered by this specification shall be formed with conventional fabrication methods and equipment found in primary ferrous and nonferrous metal plants.

6.2 Bar and wire will be supplied in the conditions prescribed in Table 2.

6.3 The products covered include the sections and sizes shown in Table 1.

7. Chemical Composition

7.1 The material shall conform to the requirements as to chemical composition prescribed in Table 3.

7.2 The manufacturer's ingot analysis shall be considered the chemical analysis for bar and wire, except for hydrogen and nitrogen, which shall be determined on the finished product.

7.3 When requested by the purchaser and stated in the purchase order, a product analysis for any elements listed in Table 3 shall be made on the finished product.

7.3.1 The manufacturer's analysis shall be considered as verified if the check analysis confirms the manufacturer's reported values within the tolerances prescribed in Table 4.

8. Mechanical Properties

8.1 The annealed material shall conform to the requirements for mechanical properties, at room temperature, as prescribed in Table 5. Wire supplied for welding applications shall be furnished with a temper suitable for uniform feeding in semiautomatic or automatic welding equipment.

9. Permissible Variations in Dimensions

9.1 Unless otherwise specified, all bar or wire shall conform to the permissible variations in dimensions prescribed in the applicable Tables 6–14, inclusive.

10. Workmanship, Finish and Appearance

10.1 Bars in the hot-finished condition which will conform to the tolerances prescribed in Table 6 and Table

TABLE 3
CHEMICAL REQUIREMENTS[A]

Element	Composition, %		
	Grades R60702	Grades R60704	Grades R60705
Zirconium + hafnium, min	99.2	97.5	95.5
Hafnium, max	4.5	4.5	4.5
Iron + chromium	0.2 max	0.2 to 0.4	0.2 max
Tin	...	1.0 to 2.0	...
Hydrogen, max	0.005	0.005	0.005
Nitrogen, max	0.025	0.025	0.025
Carbon, max	0.05	0.05	0.05
Niobium	...	...	2.0 to 3.0
Oxygen, max	0.16	0.18	0.18

[A] By agreement between the purchaser and the manufacturer, analysis may be required and limits established for elements and compounds not specified in the table of chemical composition.

TABLE 4
PERMISSIBLE VARIATION IN CHECK ANALYSIS
BETWEEN DIFFERENT LABORATORIES

Element	Permissible Variation in Product Analysis, %
Hydrogen	0.002
Nitrogen	0.01
Carbon	0.01
Hafnium	0.1
Iron + chromium	0.025
Tin	0.05
Niobium	0.05
Oxygen	0.02

TABLE 5
TENSILE REQUIREMENTS[A]

	Grades		
	R60702	R60704	R60705
Tensile Strength, min, ksi (MPa)	55 (380)	60 (415)	80 (550)
Yield Strength, min, ksi (MPa)	30 (205)	35 (240)	55 (380)
Elongation in 2 in. or 50 mm min, %[B]	16	14	16

[A] For bar only.
[B] When a sub-size specimen is used, the gage length shall be as specified in Test Methods E 8 for the specimen.

7, shall be furnished with one of the following finishes as designated on the purchase order:

10.1.1 Not descaled,

10.1.2 Mechanically descaled,

10.1.3 Mechanically descaled and pickled, and

10.1.4 Turned (round bars only).

10.2 Bars and wire in cold-finished condition, that will conform to the tolerances prescribed in Tables 8–12, shall be furnished with one of the following finishes as designated on the purchase order.

10.2.1 Cold drawn or cold rolled, or swaged,

10.2.2 Turned (round bars only),

10.2.3 Centerless ground (round bars only), and

10.2.4 Polished (round bars only).

10.3 Bars or wire shall be free of cracks, seams, slivers, blisters, burrs, and other injurious imperfections

TABLE 6
DIMENSIONAL TOLERANCES FOR HOT-FINISHED ROUNDS, SQUARES, OCTAGONS, AND HEXAGONS

Specified Size, in.	Variation in Size, in. (mm)	Out of Round, Out of Square, in. (mm)
Up–0.500 (13)	+0.030 –0 (+0.75)	0.025 (0.64)
Over 0.500–1.000 (13–25)	+0.050 –0 (+1.3)	0.040 (1)
Over 1.000–2.000 (25–50)	+0.070 –0 (+1.8)	0.060 (1.5)
Over 2.000–4.000 (50–100)	+0.150 –0 (+3.8)	0.080 (2)
Over 4.000–6.000 (100–150)	+0.250 –0 (+6.4)	0.100 (2.5)

TABLE 7
DIMENSIONAL TOLERANCES IN HOT-ROLLED FLAT BARS

Thickness, in. (mm)	Variation in Thickness, in. (mm)	Variation in Width,[A] in. (mm)
Up–0.150 (3.8)	+0.020 –0 (+0.5)	1/8 –0 (3.2)
Over 0.150–0.250 (3.8–6.3)	+0.030 –0 (+0.75)	5/32 –0 (4.0)
Over 0.250–0.350 (6.3–8.9)	+0.040 –0 (+1.0)	3/16 –0 (4.8)
Over 0.350–0.450 (8.9–11.4)	+0.050 –0 (+1.3)	7/32 –0 (5.6)
Over 0.450–0.550 (11.4–14)	+0.070 –0 (+1.8)	[B]
Over 0.550–1.500 (14–38)	+0.080 –0 (+2.0)	[B]
Over 1.500 (38)	[B]	[B]

[A] For bars sheared from plate, width tolerances shall be as follows:
[B] Depends on size and quantity ordered.

Specified Thickness, in. (mm)	Width Tolerances, in. (mm)	
	Over	Under
Over 0.100–0.150	1/16 (1.6)	1/16 (1.6)
Over 0.150–0.250	5/64 (2.0)	5/64 (2.0)
Over 0.250–0.350	3/32 (2.4)	3/32 (2.4)
Over 0.350–0.450	7/64 (2.8)	7/64 (2.8)
Over 0.450–0.550	1/8 (3.2)	1/8 (3.2)
Over 0.550–0.650	5/32 (4.0)	5/32 (4.0)

in accordance with standards of acceptability agreed upon between the manufacturer and the purchaser.

11. Significance of Numerical Limits

11.1 For the purpose of determining compliance with the specified limits for requirements of the properties listed in the following table, an observed value or a calculated value shall be rounded as indicated in accordance with the rounding methods of Practice E 29.

Property	Rounded Unit for Observed or Calculated Value
Chemical composition and tolerances (when expressed as decimals)	Nearest unit in the last right-hand place of figures of the specified limit
Tensile strength and yield strength	Nearest 1000 psi (10 MPa)
Elongation	Nearest 1%

12. Number of Tests and Retests

12.1 One longitudinal tension test shall be made from each lot of bar and rod, see 13.1.

12.2 One chemistry test for hydrogen and nitrogen content shall be made from each lot of finished product, see 13.2.

12.3 *Retests:*

12.3.1 If any sample or specimen exhibits obvious surface contamination or improper preparation disqualifying it as a truly representative sample, it shall be discarded and a new sample or specimen substituted.

12.3.2 If the results of any tests of any lot do not conform to the requirements specified, retests shall be made on additional samples from the same lot, each of which shall conform to the requirements specified.

TABLE 8
PERMISSIBLE VARIATIONS IN SECTIONAL DIMENSIONS FOR COLD-FINISHED BARS IN ROUNDS, HEXAGONS, OCTAGONS, AND SQUARES

Specified Size, in. (mm)	Permissible Variation, in.[A] (mm) Over	Under
Rounds		
Over ½–1, excl (13–25)	0.002 (0.05)	0.002 (0.05)
1–1½, excl (25–38)	0.0025 (0.06)	0.0025 (0.06)
1½–4, incl[B] (38–100)	0.003 (0.08)	0.003 (0.08)
Hexagons, Octagons, and Squares		
Over ½–1, incl (13–25)	0	0.004 (0.10)
Over 1–2, incl (25–50)	0	0.006 (0.15)
Over 2–3, incl (50–75)	0	0.008 (0.20)
Over 3 (75)	0	0.010 (0.25)

[A] When it is necessary to heat treat or heat treat and pickle after cold finishing because of special hardness or mechanical property requirements, tolerances are double those shown in the table.

[B] For permissible variations on sizes over 4 in. (100 mm) the manufacturer should be consulted.

TABLE 9
PERMISSIBLE VARIATIONS IN WIDTH AND THICKNESS FOR COLD-FINISHED BARS IN FLATS

Width, in. (mm)	Permissible Variations in Width for Thicknesses Given, Over and Under, in.[A] (mm) ¼ (6.4) and under	Over ¼ (6.4)
Width		
⅜–1, incl (10–25)	0.004 (0.10)	0.002 (0.05)
Over 1–2, incl (25–50)	0.006 (0.15)	0.003 (0.08)
Over 2–3, incl (50–75)	0.008 (0.20)	0.004 (0.10)
Over 3–4½, incl[B] (75–115)	0.010 (0.25)	0.005 (0.13)

Thickness, in. (mm)	Permissible Variations in Thickness Over and Under, in.[A] (mm)
Thickness	
⅛–1, incl (3.2–25)	0.002 (0.05)
Over 1–2, incl (25–50)	0.003 (0.08)
Over 2–3, incl (50–75)	0.004 (0.10)
Over 3–4½, incl[B] (75–115)	0.005 (0.13)

[A] When it is necessary to heat treat and pickle after cold finishing because of hardness or mechanical property requirements, tolerances are double those shown in the table.

[B] For permissible variations on widths and thicknesses over 4½ in. (115 mm) the manufacturer should be consulted.

13. Test Methods

13.1 *Tension Tests* — Conduct the tension test in accordance with Test Methods E 8. Determine the yield strength by the offset (0.2%) method. Determine the tensile properties using a strain rate of 0.003 to 0.007 in./in. (mm/mm)/min through the yield strength. After the yield strength has been exceeded, the cross-head speed may be increased to approximately 0.05 in./in. (mm/mm)/min to failure.

13.2 *Chemical Tests* — Conduct the chemical analysis by the standard techniques normally used by the manufacturer.

14. Inspection

14.1 The manufacturer shall inspect the material covered by this specification prior to shipment and, on request, shall furnish the purchaser with certificates of test. If so specified in the purchase order, the purchaser or his representative may witness the testing and inspection of the material at the place of manufacture. In such cases the purchaser shall state in his purchase order which tests he desires to witness. The manufacturer shall give ample notice to the purchaser as to the time and place of the designated tests. If the purchaser's representative does not present himself at the time agreed upon for the testing, the manufacturer shall consider the requirement for purchaser's inspection at the place of manufacture to be waived.

14.2 The manufacturer shall afford the inspector representing the purchaser, without charge, all reasonable facilities to satisfy him that the material is being furnished in accordance with this specification. This inspection shall be so conducted as not to interfere unnecessarily with the operation of the works.

15. Rejection

15.1 Rejection for failure of the material to meet the requirements of this specification shall be reported to the manufacturer within 60 calendar days from the receipt of the material by the purchaser. Unless otherwise specified, rejected material may be returned to the manufacturer at the manufacturer's expense, unless the purchaser receives, within three weeks of the notice of rejection, other instructions for disposition.

16. Certification

16.1 A producer's or supplier's certification shall be furnished to the purchaser that the material was manufactured, sampled, tested, and inspected in accordance with

TABLE 10
PERMISSIBLE VARIATIONS IN SECTIONAL DIMENSIONS FOR WIRE[A]

Specified Size, in. (mm)	Permissible Variation, in. (mm) Over	Under
Drawn, Centerless Ground, Centerless Ground and Polished Round Wire, and Square Wire[B]		
1/2 (13)	0.002 (0.05)	0.002 (0.05)
Under 1/2–5/16, incl (13–18)	0.0015 (0.04)	0.0015 (0.04)
Under 5/16–0.044, incl (8–1.1)	0.001 (0.025)	0.001 (0.025)
Under 0.044–0.033, incl (1.1–0.8)	0.0008 (0.020)	0.0008 (0.020)
Under 0.033–0.024, incl (0.8–0.6)	0.0005 (0.013)	0.0005 (0.013)
Under 0.024–0.012, incl (0.6–0.3)	0.0004 (0.010)	0.0004 (0.010)
Under 0.012–0.008, incl (0.3–0.2)	0.0003 (0.008)	0.0003 (0.008)
Under 0.008–0.007, incl (0.2–1.8)	0.0002 (0.005)	0.0002 (0.005)
Under 0.007–0.00476, incl (0.18–0.12)	0.0002 (0.005)	0.0002 (0.005)
Under 0.00476–0.003, incl (0.12–0.08)	0.0001 (0.003)	0.0001 (0.003)
Drawn Wire in Hexagons and Octagons[C]		
1/2 (13)	0	0.004 (0.10)
Under 1/2–5/16, incl (13–18)	0	0.003 (0.08)
Under 5/16–1/8, incl (8–3.2)	0	0.002 (0.05)
Wire for Which the Final Operation is a Surface Treatment to Remove Scale or Drawing Lubricant		
1/2 (13)	0.004 (0.10)	0.004 (0.10)
Under 1/2–5/16, incl (13–18)	0.003 (0.08)	0.003 (0.08)
Under 5/16–0.044, incl (8–1.1)	0.002 (0.05)	0.002 (0.05)
Under 0.044–0.033, incl (1.1–0.8)	0.0013 (0.03)	0.0013 (0.03)
Under 0.033–0.024, incl (0.8–0.6)	0.0008 (0.02)	0.0008 (0.02)

[A] Manufacturers should be consulted for all tolerances for half-round, oval, and half-oval wires.
[B] The maximum out-of-round tolerance for round wire is one half of the total size tolerance shown in the above table.
[C] Dimensions are across flats.

TABLE 11
PERMISSIBLE VARIATIONS IN THICKNESS AND WIDTH FOR COLD-FINISHED FLAT WIRE

Specified Width, in. (mm)	Permissible Variation in Thickness for Given Thickness, Over or Under, in. (mm) Under 0.029 (0.74)	0.029 (0.75)–0.035 (0.89), excl	0.035 (0.89)–3/16 (4.80), excl	Permissible Variation in Width, in. (mm) Over	Under
Under 3/8 (9.5) to 1/16 (1.6), incl	0.001 (0.025)	0.0015 (0.04)	0.002 (0.05)	0.005 (0.125)	0.005 (0.125)

this specification and has been found to meet the requirements. A report of the test results shall be furnished.

17. Referee

17.1 In the event of disagreement between the manufacturer and the purchaser on the conformance of the material to the requirements of this specification or any special test specified by the purchaser, a mutually acceptable referee shall perform the tests in question. The results of the referee's testing shall be used in determining conformance of the material to this specification.

18. Product Marking

18.1 Each bundle, box, or coil shall be marked or tagged legibly and conspicuously with the purchase order

TABLE 12
PERMISSIBLE VARIATIONS IN LENGTH FOR HOT-FINISHED OR COLD-FINISHED BARS

Specified Sizes of Rounds, Squares, Hexagons, Octagons, and Widths of Flats, in. (mm)	Permissible Variation in Length, in. (mm)			
	To 12 ft (3.5 m), incl		Over 12 ft (3.5 m) to 25 ft (7.6 m), incl	
	Over	Under	Over	Under
To 2, incl (50)	1/2 (13)	0	3/4 (20)	0
Over 2–4, incl (50–100)	3/4 (20)	0	1 (25)	0
Over 4–6, incl (100–150)	1 (25)	0	1 1/4 (32)	0
Over 6–9, incl (150–225)	1 1/4 (32)	0	1 1/2 (38)	0
Over 9–12, incl (225–300)	1 1/2 (38)	0	2 (50)	0
Machine-Cut After Machine Straightening				
To 3, incl	1/8 (3.2)	0	3/16 (4.8)	0
Over 3–6, incl	3/16 (4.8)	0	1/4 (6.4)	0
Over 6–9, incl	1/4 (6.4)	0	5/16 (8.0)	0
Over 9–12, incl	1/2 (13.0)	0	1/2 (13.0)	0

TABLE 13
PERMISSIBLE VARIATIONS IN LENGTH FOR ROUND AND SHAPE, STRAIGHTENED AND CUT WIRE, AND EXACT LENGTH RESHEARED WIRE

Diameter, in. (mm)	Length, ft (m)	Permissible Variation, in. (mm)	
		Over	Under
0.125 (3.2) and under	Up to 12 (3.5), incl	1/16 (1.6)	0
0.125 (3.2) and under	Over 12 (3.5)	1/8 (3.2)	0
Over 0.125 (3.2) to 0.500 (13.0), incl	Under 3 (1.0)	1/32 (0.8)	0
Over 0.125 (3.2) to 0.500 (13.0), incl	3 to 12, incl (1.0–3.5)	1/16 (1.6)	0
Over 0.125 (3.2) to 0.500 (13.0), incl	Over 12 (3.5)	1/8 (3.2)	0

TABLE 14
PERMISSIBLE VARIATIONS IN STRAIGHTNESS FOR HOT-OR COLD-FINISHED BARS[A]

Bars	Permissible Variation
Hot finished	1/8 in. (3.2 mm) in any 5 ft (1.5 m); but may not exceed 1/8 (0.4 mm) × [number of feet (meters) in length/5]
Cold finished	1/16 in. (1.6 mm) in any 5 ft (1.5 m); but may not exceed 1/16 (0.2 mm) × [number of feet (meters) in length/5]

[A] The measurement is taken on the concave side of the bar with a straight edge. Unless otherwise specified, hot-finished or cold-finished bars for machining purposes are furnished machine-straightened to the tolerances specified in the Table.

or contract number, manufacturer's private identification mark, the ASTM designation, the grade, size, ingot number, and gross, net, and tare weights.

19. Packaging and Package Marking

19.1 All material shall be boxed, crated, banded on skids, or bundled in such a manner as to assure safe delivery to its destination when properly transported by common carrier.

20. Keywords

20.1 bar; wire; zirconium; zirconium alloy

SPECIFICATION FOR ZIRCONIUM AND ZIRCONIUM ALLOY STRIP, SHEET, AND PLATE

SB-551/SB-551M

(Identical with ASTM Specification B 551/B 551M-01 except for section 16.1, which requires mandatory certification.)

1. Scope

1.1 This specification covers three grades of zirconium strip, sheet, and plate.

1.2 Unless a single unit is used, for example corrosion mass gain in mg/dm^2, the values stated in either inch-pound or SI units are to be regarded separately as standard. The values stated in each system are not exact equivalents; therefore each system must be used independently of the other. SI values cannot be mixed with inch-pound values.

1.3 The following precautionary caveat pertains only to the test method portions of this specification: *This standard does not purport to address all of the safety concerns, if any, associated with its use. It is the responsibility of the user of this standard to establish appropriate safety and health practices and determine the applicability of regulatory limitations prior to use.*

2. Referenced Documents

2.1 *ASTM Standards:*

E 8 Test Methods for Tension Testing of Metallic Materials

E 29 Practice for Using Significant Digits in Test Data to Determine Conformance with Specifications

3. Terminology

3.1 *Definitions of Terms Specific to This Standard:*

3.1.1 *annealed* — denotes material that exhibits a recrystallized grain structure.

3.2 *Lot Definitions:*

3.2.1 *castings* — a lot shall consist of all castings produced from the same pour.

3.2.2 *ingot* — no definition required.

3.2.3 *rounds, flats, tubes, and wrought powder metallurgical products (single definition, common to nuclear and non-nuclear standards)* — a lot shall consist of a material of the same size, shape, condition, and finish produced from the same ingot or powder blend by the same reduction schedule and the same heat treatment parameters. Unless otherwise agreed between manufacturer and purchaser, a lot shall be limited to the product of an 8 h period for final continuous anneal, or to a single furnace load for final batch anneal.

3.2.4 *sponge* — a lot shall consist of a single blend produced at one time.

3.2.5 *weld fittings* — definition is to be mutually agreed upon between manufacturer and the purchaser.

4. Classification

4.1 The strip, sheet, or plate is to be furnished in four grades as follows:

4.1.1 *Grade R60702* — Unalloyed zirconium.

4.1.2 *Grade R60704* — Zirconium-tin.

4.1.3 *Grade R60705* — Zirconium-niobium.

4.1.4 *Grade R60706* — Zirconium-niobium.

5. Ordering Information

5.1 Orders for this material under this specification should include the following information:

5.1.1 Quantity (weight or number of pieces),

5.1.2 Name of material (zirconium strip, sheet, or plate),

5.1.3 Grade number (see 4),

TABLE 1
CHEMICAL REQUIREMENTS[A]

Element	Composition, %			
	Grades			
	R60702	R60704	R60705	R60706
Zirconium + hafnium, min	99.2	97.5	95.5	95.5
Hafnium, max	4.5	4.5	4.5	4.5
Iron + chromium	0.2 max	0.2 to 0.4	0.2 max	0.2 max
Tin	...	1.0 to 2.0	...	...
Hydrogen, max	0.005	0.005	0.005	0.005
Nitrogen, max	0.025	0.025	0.025	0.025
Carbon, max	0.05	0.05	0.05	0.05
Niobium	...	...	2.0 to 3.0	2.0 to 3.0
Oxygen, max	0.16	0.18	0.18	0.16

[A] By agreement between the purchaser and the manufacturer, analysis may be required and limits established for elements and compounds not specified in the table of chemical composition.

5.1.4 ASTM designation and year of issue,

5.1.5 Finish and appearance (Section 10), and

5.1.6 Additions to the specification and supplementary requirements, if required.

NOTE 1 — A typical ordering description is as follows: 9000-lb (5000 kg) zirconium sheet, 0.098 in. (2.5 mm) by 12 in. (300 mm) by 144 in. (3.5 m), ASTM B 551, dated ———, Grade R60705.

6. Materials and Manufacture

6.1 The sheet, strip, or plate covered by this specification shall be formed with conventional forging and rolling equipment found in primary ferrous and nonferrous metal plants.

6.2 The sheet, strip, and plate shall be supplied in the recrystallized annealed condition.

7. Chemical Composition

7.1 The material shall conform to the requirements as to chemical composition prescribed in Table 1.

7.2 The manufacturer's ingot analysis shall be considered the chemical analysis for sheet, strip, and plate, except for hydrogen and nitrogen, which shall be determined on the finished product.

7.3 When requested by the purchaser and stated in the purchase order, a product analysis for any elements listed in Table 1 shall be made on the finished product.

7.3.1 The manufacturer's analysis shall be considered as verified if the check analysis confirms the manufacturer's reported values within the tolerances prescribed in Table 2.

TABLE 2
PERMISSIBLE VARIATION IN CHECK ANALYSIS BETWEEN DIFFERENT LABORATORIES

Element	Permissible Variation in Product Analysis, %
Hydrogen	0.002
Nitrogen	0.01
Carbon	0.01
Hafnium	0.1
Iron + chromium	0.025
Tin	0.05
Niobium	0.05
Oxygen	0.02

8. Tensile Requirements

8.1 The material, as represented by the test specimens, shall conform to the tensile properties prescribed in Table 3.

8.2 For sheet and strip, the bend test specimen shall stand being bent cold through an angle of 105° without fracture in the outside of the bent portion. The bend shall be made on a radius equal to that shown in Table 3 for the applicable grade.

9. Permissible Variations in Dimensions

9.1 *Thickness* — The variation in thickness of strip, sheet, and plate are given in the following tables:

9.1.1 Hot- and cold-rolled sheet, Table 4.

9.1.2 Hot-rolled strip, Table 5.

9.1.3 Cold-rolled strip, Table 6.

9.1.4 Plate, Table 7.

TABLE 3
TENSILE REQUIREMENTS

	Grades			
	R60702	R60704	R60705	R60706
Tensile strength, min, ksi (MPa)	55 (380)	60 (415)	80 (550)	74 (510)
Yield strength, min, ksi (MPa)	30 (205)	35 (240)	55 (380)	50 (345)
Elongation in 2 in. or 50 mm, min, %[A]	16	14	16	14
Bend test radius[B]	5T	5T	3T	2.5T

[A] When a sub-size specimen is used, the gage length shall be as specified in Test Methods E 8 for that specimen.

[B] T equals the thickness of the bend test specimen. Bend tests are not applicable to material over 0.187 in. (4.8 mm) in thickness.

TABLE 4
PERMISSIBLE VARIATIONS IN THICKNESS OF HOT- AND COLD-ROLLED ZIRCONIUM SHEET[A]

Specified Thickness, in. (mm)	Permissible Variations in Thickness, plus and minus, in. (mm)
0.146–0.1875, excl (3.7–4.8)	0.014 (0.35)
0.131–0.145 (3.31–3.69)	0.012 (0.30)
0.115–0.130 (2.91–3.30)	0.010 (0.25)
0.099–0.114 (2.51–2.90)	0.009 (0.23)
0.084–0.098 (2.12–2.50)	0.008 (0.20)
0.073–0.083 (1.84–2.11)	0.007 (0.18)
0.059–0.072 (1.49–1.83)	0.006 (0.15)
0.041–0.058 (1.04–1.48)	0.005 (0.13)
0.027–0.040 (0.67–1.03)	0.004 (0.10)
0.017–0.026 (0.42–0.66)	0.003 (0.08)
0.008–0.016 (0.19–0.41)	0.002 (0.05)
0.006–0.007 (0.15–0.18)	0.0015 (0.04)
0.005 (0.13)	0.001 (0.025)

[A] Thickness measurements are taken at least 3/8 in. (9.5 mm) in from edge.

TABLE 5
PERMISSIBLE VARIATIONS IN THICKNESS OF HOT-ROLLED ZIRCONIUM STRIP

Specified Width, in. (mm)	Variation from Specified Thickness for Widths Given, Over and Under, in.[A] (mm)	
	0.187–0.118, incl	0.119–0.083, incl
To 3 1/2, incl	0.006 (0.15)	0.005 (0.13)
Over 3 1/2–12, incl	0.007 (0.18)	0.006 (0.15)
Over 12–18, incl	0.008 (0.20)	0.008 (0.20)
Over 18–24, excl	0.010 (0.25)	0.010 (0.25)

[A] Thickness measurements shall be taken 3/8 in. (9.5 mm) from edge. Tolerances do not include crown.

9.2 *Width and Length* — The variation in width and length are given in the following tables:

9.2.1 Hot- and cold-rolled sheet, Table 8.

9.2.2 Hot-rolled strip, Table 9 and Table 10.

9.2.3 Cold-rolled strip, Table 11 and Table 10.

9.2.4 Plate, Table 12.

9.3 *Crown Tolerances* — The variations in crown tolerances are given in the following tables:

9.3.1 Hot-rolled strip, Table 13.

9.3.2 Cold-rolled strip, Table 14.

9.4 *Camber Tolerances* — The variations in camber tolerances are given in the following tables.

9.4.1 Hot- and cold-rolled sheet, Table 15.

9.4.2 Hot- and cold-rolled strip, Table 16.

9.4.3 Plate, Table 17.

9.5 *Diameter* — The variation in diameter tolerance for circular plates is given in Table 18.

9.6 *Weight* — The permissible variation in weight for zirconium sheet is given in Table 19.

9.7 *Flatness* — The permissible variation from a flat surface for zirconium plate is given in Table 20.

10. Workmanship, Finish and Appearance

10.1 Flat-rolled product in the hot-rolled condition shall be furnished with one of the following finishes as designated on the order.

10.1.1 Not descaled,

10.1.2 Mechanically descaled, or

10.1.3 Mechanically descaled and pickled.

10.2 Material in the cold-rolled condition shall be furnished with a bright cold-rolled finish, or finished by mechanical or chemical methods.

TABLE 6
PERMISSIBLE VARIATIONS IN THICKNESS OF COLD-ROLLED ZIRCONIUM STRIP

	Permissible Variations in Thickness, for Widths Given, Plus and Minus, in. (mm)							
Specified Thickness, in. (mm)	3/16 (4.8 mm) incl, –1 (25 mm), in., excl	1 (25 mm)–3 (75 mm) in., excl	3 (75 mm)–6 (150 mm) in., incl	Over 6 (150 mm)–9 (230 mm) in., incl	Over 9 (230 mm)–12 (300 mm) in., incl	Over 12 (300 mm)–16 (400 mm) in., incl	Over 16 (400 mm)–20 (500 mm) in., incl	Over 20 (500 mm)–24 (600 mm) in., incl
Under 3/16–0.161, incl (4.8–4.1)	0.002 (0.05)	0.003 (.08)	0.004 (.10)	0.004 (.10)	0.004 (.10)	0.005 (.13)	0.006 (.16)	0.006 (.16)
0.160–0.100, incl (4.0–2.52)	0.002 (0.05)	0.002 (.05)	0.003 (.08)	0.004 (.10)	0.004 (.10)	0.004 (.10)	0.005 (.13)	0.005 (.13)
0.099–0.069, incl (2.51–1.75)	0.002 (0.05)	0.002 (.05)	0.003 (.08)	0.003 (.08)	0.003 (.08)	0.004 (.10)	0.004 (.10)	0.004 (.10)
0.068–0.050, incl (1.74–1.3)	0.002 (0.05)	0.002 (.05)	0.003 (.08)	0.003 (.08)	0.003 (.08)	0.003 (.08)	0.004 (.10)	0.004 (.10)
0.049–0.040, incl (1.29–1.00)	0.002 (0.05)	0.002 (.05)	0.0025 (.06)	0.003 (.08)	0.003 (.08)	0.003 (.08)	0.004 (.10)	0.004 (.10)
0.039–0.035, incl (0.99–0.90)	0.002 (0.05)	0.002 (.05)	0.0025 (.06)	0.003 (.08)	0.003 (.08)	0.003 (.08)	0.003 (.08)	0.003 (.08)
0.034–0.029, incl (0.89–0.73)	0.0015 (.04)	0.0015 (.04)	0.002 (.05)	0.0025 (.06)	0.0025 (.06)	0.0025 (.06)	0.003 (.08)	0.003 (.08)
0.028–0.026, incl (0.72–0.66)	0.001 (.025)	0.0015 (.04)	0.0015 (.04)	0.002 (.05)	0.002 (.05)	0.002 (.05)	0.0025 (.06)	0.003 (.08)
0.025–0.020, incl (0.65–0.51)	0.001 (.025)	0.001 (.025)	0.0015 (.04)	0.002 (.05)	0.002 (.05)	0.002 (.05)	0.0025 (.06)	0.0025 (.06)
0.019–0.017, incl (0.50–0.43)	0.001 (.025)	0.001 (.025)	0.001 (.025)	0.0015 (.04)	0.0015 (.04)	0.002 (.05)	0.002 (.05)	0.002 (.05)
0.016–0.013, incl (0.42–0.32)	0.001 (.025)	0.001 (.025)	0.001 (.025)	0.0015 (.04)	0.0015 (.04)	0.0015 (.04)	0.002 (.05)	0.002 (.05)
0.012 (.30)	0.001 (.025)	0.001 (.025)	0.001 (.025)	0.001 (.025)	0.0015 (.04)	0.0015 (.04)	0.0015 (.04)	0.0015 (.04)
0.011 (.28)	0.001 (.025)	0.001 (.025)	0.001 (.025)	0.001 (.025)	0.001 (.025)	0.0015 (.04)	0.0015 (.04)	0.0015 (.04)
0.010 (.25)	0.001 (.025)	0.001 (.025)	0.001 (.025)	0.001 (.025)	0.001 (.025)	0.001 (.025)	0.0015 (.04)	0.0015 (.04)

NOTE 1 — For thickness under 0.010 in. (0.25 mm) in widths to 16 in. (400 mm) a tolerance of ±10% of the thickness shall apply; in widths over 16 (400 mm) to 24 in. (600 mm) incl, a tolerance of ±15% of the thickness shall apply.

NOTE 2 — Thickness measurements shall be taken 3/8 in. (9.5 mm) in from edge of the strip, except on widths less than 1 in. (2.5 mm) where the tolerances are applicable for measurements at all locations.

NOTE 3 — The tolerances given in this table do not include crown tolerances.

TABLE 7
PERMISSIBLE VARIATIONS IN THICKNESS OF ZIRCONIUM PLATE[A]

	Permissible Variations in Thickness for Widths Given, in. (mm)			
	To 84 in. (2.1 m), incl		Over 84–120 in. (2.1–3.05 m), incl	
Specified Thickness, in. (mm)	Plus	Minus	Plus	Minus
1/8 (3.2)–3/8 (9.5), excl	0.046 (1.17)	0.01 (.25)	0.050 (1.3)	0.01 (.25)
3/8 (9.5)–3/4 (20), excl	0.054 (1.37)	0.01 (.25)	0.058 (1.47)	0.01 (.25)
3/4 (20)–1 (25), excl	0.060 (1.52)	0.01 (.25)	0.064 (1.62)	0.01 (.25)
1 (25)–2 (50)[B], incl	0.070 (1.78)	0.01 (.25)	0.074 (1.88)	0.01 (.25)

[A] For circles, the plus tolerances for the specified thicknesses apply to the diameter of the circle corresponding to the width ranges shown. For plates of irregular shape, the plus thickness tolerances apply to the greatest width corresponding to the width ranges shown.

[B] For permissible variations on plates over 2 in. (50 mm) thick, the producer should be consulted.

TABLE 8
PERMISSIBLE VARIATIONS IN WIDTH AND LENGTH OF HOT- AND COLD-ROLLED ZIRCONIUM SHEET

Specified Width, in. (m), for Thicknesses Under 3/16 in. (4.8 mm)	Permissible Variations in Width, in. (mm)
24–48, excl (7–14)	+1/8, –0 (+3.2, –0)
48 and over (14)	+3/16, –0 (+4.8, –0)
Specified Length, ft (m)	**Permissible Variations in Length, in. (mm)**
Up–10, incl (3)	+1/2, –0 (+13, –0)
Over 10–20, incl (3–6)	+1, –0 (+25, –0)

TABLE 9
PERMISSIBLE VARIATIONS IN WIDTH OF HOT-ROLLED ZIRCONIUM STRIP

	Permissible Variation in Width, in. (mm)					
	Mill Edge		Slit Edge		Sheared Edge	
Specified Width, in. (mm)	Plus	Minus	Plus	Minus	Plus	Minus
To 3 1/2, incl (90)	1/8 (3.2)	0	1/32 (0.8)	1/32 (0.8)	1/16 (0.6)	1/16 (0.6)
Over 3 1/2–12, incl (90–300)	1/4 (6.4)	1/8 (3.2)	1/32 (0.8)	1/32 (0.8)	1/8 (3.2)	0
Over 12–18, incl (300–460)	3/8 (9.5)	1/8 (3.2)	3/64 (1.2)	3/64 (1.2)	1/8 (3.2)	0
Over 18–24, excl (460–300)	1/2 (13)	1/4 (6.4)	3/64 (1.2)	3/64 (1.2)	3/16 (4.8)	0

TABLE 10
PERMISSIBLE VARIATIONS IN LENGTH OF HOT- AND COLD-ROLLED ZIRCONIUM STRIP

Specified Length, ft (m)	Permissible Variations in Length, in. (mm)
To 5, incl (1.5)	+3/8, –0 (+9.5, –0)
Over 5–10, incl (1.5–3)	+1/2, –0 (+13, –0)
Over 10–20, incl (3–6.1)	+5/8, –0 (+16, –0)

TABLE 11
PERMISSIBLE VARIATIONS IN WIDTH OF COLD-ROLLED ZIRCONIUM STRIP (SLIT EDGE)

Specified Thickness, in. (mm)	Permissible Variations in Width, for Widths Given, Plus and Minus, in. (mm)					
	Under 1/2 (13)–3/16 (4.8), in., incl	1/2 (13)–6 (150), in., incl	Over 6 (150)–9 (230) in., incl	Over 9 (230)–12 (300) in., incl	Over 12 (300)–20 (500) in., incl	Over 20 (500)–24 (600) in., excl
Under 3/16–0.161, incl (4.8–4.1)	. . .	0.016 (.41)	0.020 (.5)	0.020 (.5)	0.031 (.8)	0.031 (.8)
0.160–0.100, incl (4.0–2.52)	0.010 (.25)	0.010 (.25)	0.016 (.41)	0.016 (.41)	0.020 (.5)	0.020 (.5)
0.099–0.069, incl (2.51–1.75)	0.008 (.2)	0.008 (.2)	0.010 (.25)	0.010 (.25)	0.016 (.41)	0.020 (.5)
0.068 and under (1.74)	0.005 (.13)	0.005 (.13)	0.005 (.25)	0.010 (.25)	0.016 (.41)	0.020 (.5)

TABLE 12
PERMISSIBLE VARIATIONS IN WIDTH AND LENGTH OF RECTANGULAR, SHEARED ZIRCONIUM PLATE

		Permissible Variations Over Specified Dimension, for Thickness Given, in. (mm)					
		Under 3/8 in. (9.5 mm)		3/8–5/8 in. (9.5–16 mm), excl		5/8 in. (16 mm) and Over	
Specified Length, in. (m)	Specified Width, in. (m)	Width	Length	Width	Length	Width	Length
Under 120 (3.05)	Under 60 (1.52)	3/8 (9.5)	1/2 (13)	7/16 (11)	5/8 (16)	1/2 (13)	3/4 (20)
	60–84 (1.52–2.1), excl	7/16 (11)	5/8 (16)	1/2 (13)	11/16 (17.5)	5/8 (16)	7/8 (22)
	84–108 (2.1–2.74), excl	1/2 (13)	3/4 (20)	5/8 (16)	7/8 (22)	3/8 (9.5)	1 (25)
	108 (2.74) or over	5/8 (16)	7/8 (22)	3/4 (20)	1 (25)	7/8 (22)	1 1/8 (28.6)
120–240 (3.05–6.1), excl	Under 60 (1.52)	3/8 (9.5)	5/8 (16)	1/2 (13)	7/8 (22)	5/8 (16)	1 (25)
	60–84 (1.52–2.1), excl	1/2 (13)	3/4 (20)	3/8 (16)	7/8 (22)	3/4 (20)	1 (25)
	84–108 (2.1–2.74), excl	9/16 (14)	7/8 (22)	11/16 (17.5)	15/16 (24)	13/16 (20.6)	1 1/8 (28.6)
	108 (2.74) or over	5/8 (16)	1 (25)	3/4 (20)	1 1/8 (28.6)	7/8 (22)	1 1/4 (32)
240–360 (6.1–9.15), excl	Under 60 (1.52)	3/8 (9.5)	1 (25)	1/2 (13)	1 1/8 (28.6)	5/8 (16)	1 1/4 (32)
	60–84 (1.52–2.1) excl	1/2 (13)	1 (25)	5/8 (16)	1 1/8 (28.6)	3/4 (20)	1 1/4 (32)
	84–108 (2.1–2.74), excl	9/16 (14)	1 (25)	11/16 (17.5)	1 1/8 (28.6)	7/8 (22)	1 3/8 (35)
	108 (2.74) or over	11/16 (17.5)	1 1/8 (28.6)	7/8 (22)	1 1/4 (32)	1 (25)	1 3/8 (35)
360–480 (9.5–12.2), excl	Under 60 (1.52)	7/16 (11)	1 1/8 (28.6)	1/2 (13)	1 1/4 (32)	5/8 (16)	1 1/2 (38)
	60–84 (1.52–2.1), excl	1/2 (13)	1 1/4 (32)	5/8 (16)	1 3/8 (35)	3/4 (20)	1 1/2 (38)
	84–108 (2.1–2.74), excl	9/16 (14)	1 1/4 (32)	3/4 (20)	1 3/8 (35)	7/8 (22)	1 1/2 (38)
	108 (2.74) or over	3/4 (20)	1 3/8 (35)	7/8 (22)	1 1/2 (38)	1 (25)	1 5/8 (41)
480–600 (12.2–15.24), excl	Under 60 (1.52)	7/16 (11)	1 1/4 (32)	1/2 (13)	1 1/2 (38)	5/8 (16)	1 5/8 (41)
	60–84 (1.52–2.1), excl	1/2 (13)	1 3/8 (35)	5/8 (16)	1 1/2 (38)	3/4 (20)	1 5/8 (41)
	84–108 (2.1–2.74), excl	5/8 (16)	1 3/8 (35)	3/4 (20)	1 1/2 (38)	7/8 (22)	1 5/8 (41)
	108 (2.74) or over	3/4 (20)	1 1/2 (38)	7/8 (22)	1 5/8 (41)	1 (25)	1 3/4 (45)
600 (15.24) or over	Under 60 (1.52)	1/2 (13)	1 3/4 (45)	5/8 (16)	1 7/8 (48)	5/8 (16)	1 7/8 (48)
	60–84 (1.52–2.1), excl	5/8 (16)	1 3/4 (45)	3/4 (20)	1 7/8 (48)	7/8 (22)	1 7/8 (48)
	84–108 (2.1–2.74), excl	5/8 (16)	1 3/4 (45)	3/4 (20)	1 7/8 (48)	7/8 (22)	1 7/8 (48)
	108 (2.74) or over	7/8 (22)	1 3/4 (45)	1 (25)	2 (50)	1 1/8 (28.6)	2 1/4 (57)

NOTE 1 — The permissible variation under the specified width and length is 1/4 in. (6.4 mm).

NOTE 2 — Rectangular plates over 1 in. (25 mm) in thickness are not commonly sheared, and are machined or otherwise cut to length and width or produced in the size as-rolled, uncropped.

TABLE 13
CROWN TOLERANCES FOR HOT-ROLLED ZIRCONIUM STRIP

Specified Width, in. (mm)	Permissible Variation in Thickness from Edge to Center of Strip, for Widths Given, in. (mm)
To 3½, incl (90)	0.003 (0.08)
Over 3½–12, incl (90–300)	0.004 (0.10)
Over 12–18, incl (300–460)	0.006 (0.15)
Over 18–24, excl (460–500)	0.008 (0.20)

TABLE 14
CROWN TOLERANCES FOR COLD-ROLLED ZIRCONIUM STRIP

	Tolerance by which the Thickness at Middle of Strip may be Greater than at the Edges, for Widths Given, in. (mm)		
Specified Thickness, in. (mm)	To 5 (125), incl	Over 5 (125)–12 (300), incl	Over 12 (300)–24 (600), incl
0.005 (.13)–0.010 (.25), incl	0.00075 (.02)	0.001 (.025)	0.0015 (.04)
Over 0.010 (.25)–0.025 (.64), incl	0.001 (0.25)	0.0015 (.04)	0.002 (.05)
Over 0.025 (.64)–0.065 (1.65), incl	0.0015 (.04)	0.002 (.05)	0.0025 (.06)
Over 0.065 (1.65)–3/16 (4.8), excl	0.002 (.05)	0.0025 (.06)	0.003 (.08)

TABLE 15
CAMBER TOLERANCES FOR HOT- AND COLD-ROLLED ZIRCONIUM SHEET[A]

Specified Width, in. (mm)	Tolerance per Unit Length of Any 8 ft (24 m), in. (mm)
24–36, incl (600–900)	⅛ (3.2)
Over 36 (900)	3/32 (2.4)

[A] Camber is the greatest deviation of a side edge from a straight line, the measurement being taken on the concave side with a straightedge.

TABLE 16
CAMBER TOLERANCES FOR HOT- AND COLD-ROLLED ZIRCONIUM STRIP[A]

Specified Width, in. (mm)	Tolerance, per Unit Length of Any 8 ft (2.44 m), in. (mm)
To 1½, incl (38)	½ (13)
Over 1½–24, incl (38–600)	¼ (6.4)

[A] Camber is the deviation of a side edge from a straight line. The measurement is taken by placing an 8-ft (2.44 m) straightedge on the concave side and measuring the greatest distance between the strip edge and the straightedge.

TABLE 17
CAMBER TOLERANCE FOR ZIRCONIUM PLATE[A]

Tolerance:	⅛ in. (3.2 mm) × (number of meters/1.5) (number of feet of length/5)

[A] Camber is the greatest deviation of a side edge from a straight line. The measurement is taken by placing a straightedge on the concave side and measuring the greatest distance between the plate edge and the straightedge.

10.3 The following types of edges are available:

10.3.1 Mill edge,

10.3.2 Slit edge,

10.3.3 Sheared edge, and

10.3.4 Machined edge.

11. Significance of Numerical Limits

11.1 For the purpose of determining compliance with the specified limits for requirements of the properties listed in the following table, an observed value or a calculated value shall be rounded as indicated in accordance with the rounding methods of Practice E 29.

TABLE 18
DIAMETER TOLERANCES FOR CIRCULAR PLATES

Specified Diameter, in. (m)	Tolerance Over Specified Diameter for Given Diameter and Thickness (No Tolerance Under), in. (mm)		
	To 3/8 (9.5), incl, in Thickness	3/8 to 5/8 (9.5–16) excl, in Thickness	5/8 (16) and Over in Thickness[A]
To 60 (1.5), excl	1/4 (6.4)	3/8 (9.5)	1/2 (13)
60–84 (1.5–2.1), incl	5/16 (8.0)	7/16 (11)	2/16 (14)
84–108 (2.1–2.8), excl	3/8 (9.5)	1/2 (13)	5/8 (16)
108–130 (2.8–3.3), incl	7/16 (11)	9/16 (14)	11/16 (17.5)

[A] Circular and sketch plates over 5/8 in. (16 mm) in thickness are not commonly sheared and are machined or otherwise cut.

TABLE 19
PERMISSIBLE VARIATIONS IN WEIGHT OF HOT- AND COLD-ROLLED ZIRCONIUM SHEET

The actual weight of any one item on an ordered thickness and size in any finish is limited in overweight by the following tolerance:

Any item of 5 sheets or less or any item estimated to weigh 200 lb (100 kg) or less, may actually weigh as much as 10% over the estimated weight.

Any item of more than 5 sheets and estimated to weigh more than 200 lb (100 kg) may actually weigh as much as 7½% over the estimated weight.

There is no under tolerance in weight for zirconium sheets, under tolerance being restricted by the permissible thickness variations. Only random (or mill size) sheets may be ordered on a square foot (meter) basis, and the number of square feet (meter) shipped may exceed the number ordered by as much as 5%.

Property	Rounded Unit for Observed or Calculated Value
Chemical composition and tolerances (when expressed as decimals)	Nearest unit in the last right-hand place of figures of the specified limit
Tensile strength and yield strength	Nearest 1000 psi (10 MPa)
Elongation	Nearest 1%

12. Number of Tests and Retests

12.1 One longitudinal tension shall be made from each lot (see 13.1).

12.2 One chemistry test for hydrogen and nitrogen content shall be made from each lot of finished product (see 13.2).

12.3 Two bend tests, one in the longitudinal and one in the transverse direction, shall be made from each lot (see 8.2).

12.4 *Retests:*

12.4.1 If any sample or specimen exhibits obvious surface contamination or improper preparation disqualifying it as a truly representative sample, it shall be discarded and a new sample or specimen substituted.

12.4.2 If the results of any tests of any lot do not conform to the requirements specified, retests shall be made on additional sheet, strip, or plate of double the original number from the same lot, each of which shall conform to the requirements specified.

12.4.3 Retesting after failure of initial retests may be done only with the approval of the purchaser.

13. Test Methods

13.1 *Tension Tests* — Conduct the tension test in accordance with Test Methods E 8. Determine the yield strength by the offset (0.2%) method. Determine the tensile properties using a strain rate of 0.003 to 0.007 in./in. (mm/mm)/min through the yield strength. After the yield strength has been exceeded, the cross-head speed may be increased to approximately 0.05 in./in. (mm/mm)/min to failure.

13.2 *Chemical Tests* — Conduct the chemical analysis by the standard techniques normally used by the manufacturer.

14. Inspection

14.1 The manufacturer shall inspect the material covered by this specification prior to shipment and, on request, shall furnish the purchaser with certificates of test. If so specified in the purchase order, the purchaser or his representative may witness the testing and inspection of the material at the place of manufacturer. In such cases the purchaser shall state in his purchase order which

TABLE 20
PERMISSIBLE VARIATIONS FROM A FLAT SURFACE FOR ANNEALED ZIRCONIUM PLATE–inch (mm)

Specified Thickness, in. (mm)	48 in. (1.2 m) or Under	48 (1.2 m)–60 (1.5 m), excl	60 (1.5 m)–72 (1.8 m), excl	72 (1.8 m)–84 (2.1 m), excl	84 (2.1 m)–96 (2.4 m), excl	96 (2.4 m)–108 (2.74 m) excl	108 (2.74 m)–120 (3.05 m), excl	120 (3.05 m)–144 (3.7 m), excl	144 (3.7 m) and Over
1/8 (3.2)–1/4 (6.4), excl	3/4 (20)	1 1/16 (27)	1 1/4 (32)	1 3/8 (35)	1 5/8 (41)	1 5/8 (41)	...	...	...
1/4 (6.4)–3/8 (9.5), excl	11/16 (17.5)	3/4 (20)	15/16 (24)	1 1/8 (28.6)	1 3/8 (35)	1 7/16 (36.5)	1 9/16 (40)	1 7/8 (48)	...
3/8 (9.5)–1/2 (13), excl	1/2 (13)	9/16 (14)	11/16 (17.5)	3/4 (20)	15/16 (24)	1 1/8 (28.6)	1 1/4 (32)	1 7/16 (36.5)	1 3/4 (45)
1/2 (13)–3/4 (20), excl	1/2 (13)	9/16 (14)	5/8 (16)	5/8 (16)	13/16 (20.6)	1 1/8 (28.6)	1 1/8 (28.6)	1 1/8 (28.6)	1 3/8 (35)
3/4 (20)–1 (25), excl	1/2 (13)	9/16 (14)	5/8 (16)	5/8 (16)	3/4 (20)	1 3/16 (30)	15/16 (24)	1 (25)	1 1/8 (28.6)
1 (25)–1 1/2 (38), excl	1/2 (13)	9/16 (14)	9/16 (14)	9/16 (14)	11/16 (17.5)	11/16 (17.5)	11/16 (17.5)	3/4 (20)	1 (25)
1 1/2 (39)–4 (100), excl	3/16 (4.8)	5/16 (8)	3/8 (9.5)	7/16 (11)	1/2 (13)	9/16 (14)	5/8 (16)	3/4 (20)	7/8 (22)
4 (100)–6 (150), excl	1/4 (6.4)	3/8 (9.5)	1/2 (13)	9/16 (14)	5/8 (16)	3/4 (20)	7/8 (22)	1 (25)	1 1/8 (28.6)

NOTE 1 — Variations in flatness apply to plates up to 15 ft (4.6 m) in length, or to any 15 ft (4.6 m) of longer plates.
NOTE 2 — If the longer dimension is under 36 in. (1 m), the variation is not greater than 3/4 in. (6.4 mm).
NOTE 3 — The shorter dimension specified is considered the width and the variation in flatness across the width does not exceed the tabular amount for that dimension.
NOTE 4 — The maximum deviation from a flat surface does not customarily exceed the tabular tolerance for the longer dimension specified.

tests he desires to witness. The manufacturer shall give ample notice to the purchaser as to the time and place of the designated tests. If the purchaser's representative does not present himself at the time agreed upon for the testing, the manufacturer shall consider the requirement for purchaser's inspection at the place of manufacture to be waived.

14.2 The manufacturer shall afford the inspector representing the purchaser, without charge, all reasonable facilities to satisfy him that the material is being furnished in accordance with this specification. This inspection shall be so conducted as to not interfere unnecessarily with the operation of the works.

15. Rejection

15.1 Rejection for failure of the material to meet the requirements of this specification shall be reported to the manufacturer within 60 calendar days from the receipt of the material by the purchaser. Unless otherwise specified, rejected material may be returned to the manufacturer at the manufacturer's expense, unless the purchaser receives, within three weeks of the notice of rejection, other instructions for disposition.

16. Certification

16.1 A producer's or supplier's certification shall be furnished to the purchaser and the material was manufactured, sampled, tested, and inspected in accordance with this specification and has been found to meet the requirements. A report of the test results shall be furnished.

17. Referee

17.1 In the event of disagreement between the manufacturer and the purchaser on the conformance of the material to the requirements of this specification or any special test specified by the purchaser, a mutually acceptable referee shall perform the tests in question. The results of the referee's testing shall be used in determining conformance of the material to this specification.

18. Product Marking

18.1 *Identification* — Unless otherwise specified, each plate, sheet, and strip shall be marked in the respective location indicated below, with the number of this specification, heat number, manufacturer's identification, and the nominal thickness. The characters shall be not less than $\frac{3}{8}$ in. (9.52 mm) in height, shall be applied using a suitable marking fluid, and shall be capable of being removed with a hot alkaline cleaning solution without rubbing. The marking shall have no deleterious effect on the material or its performance. The characters shall be sufficiently stable to withstand ordinary handling.

18.1.1 Plate, flat sheet, and flat strip over 6 in. (150 mm) in width shall be marked in lengthwise rows of characters recurring at intervals not greater than 3 in. (75 mm), the rows being spaced not more than 1 in. (40 mm) apart and alternatively staggered. Heat numbers shall occur at least three times across the width of the sheet and at intervals not greater than 2 ft (0.6 m) along the length. As an option, when permitted by the purchaser, each plate, sheet, or cut length strip may be marked in at least one corner with the number of this specification, heat number, manufacturer's identification, and the nominal thickness in inches or millimeters as required.

18.1.2 Flat strip 6 in. (150 mm) and under in width shall be marked near one end.

18.1.3 Coiled sheet and strip shall be marked near the outside end of the coil.

19. Packaging and Package Marking

19.1 Unless otherwise specified, material purchased under this specification may be packaged for shipment either by boxing, crating, single boarding, burlapping, or with no protection in accordance with the manufacturer's standard practice.

20. Keywords

20.1 plate; sheet; strip; zirconium; zirconium alloy

SPECIFICATION FOR NICKEL ALLOY FORGINGS

SB-564

(Identical with ASTM Specification B 564-00a except for the deletion of the Supplementary Requirements for government procurement and that certification has been made mandatory.)

1. Scope

1.1 This specification covers forgings of nickel alloy UNS N02200, Ni-Cu alloy UNS N04400, Ni-Cr-Fe alloys UNS N06600, UNS N06603, and UNS N06690, Ni-Cr-Mo-Nb alloy UNS N06625, Ni-Cr-Mo-Si alloy UNS N06219, low-carbon Ni-Mo-Cr alloys UNS N10276 and UNS N06022, Ni-Cr-Mo-W alloy UNS N06110, low-carbon Ni-Cr-Mo-W alloy UNS N06686, Ni-Fe-Cr-Mo-Cu alloy UNS N08825, Fe-Ni-Cr-Mo-N alloy UNS N08367, low-carbon Ni-Cr-Mo alloy UNS N06058, low-carbon Ni-Cr-Mo alloy UNS N06059, low carbon Ni-Cr-Mo-Cu alloy UNS N06200, Ni-Mo-Cr-Fe alloy UNS N10242, Ni-Mo alloys UNS N10665 and UNS N10675, low-carbon Ni-Fe-Cr-Mo-Cu alloy UNS N08031, Ni-Cr-W-Mo alloy UNS N06230, Ni-Cr-Co-Mo alloy UNS N06617, Ni-Co-Cr-Si alloy UNS N12160, Ni-Fe-Cr alloys, Ni-Mo alloy UNS N10629, Ni-Cr-Fe-Al alloy UNS N06025, Ni-Cr-Fe-Si alloy UNS N06045, Low-Carbon Ni-Mo-Cr-Ta alloy UNS N06210, Ni-Mo-Cr-Fe alloy UNS N10624, and low-carbon Cr-Ni-Fe-N alloy UNS R20033.

1.1.1 The nickel-iron-chromium alloys are UNS N08120, UNS N08800, UNS N08810, and UNS N08811. Alloy UNS N08800 is normally employed in service temperatures up to and including 1100°F (593°C). Alloys UNS N08810, N08120, and UNS N08811 are normally employed in service temperatures above 1100°F where resistance to creep and rupture is required, and are annealed to develop controlled grain size for optimum properties in this temperature range.

1.2 The values stated in inch-pound units are to be regarded as the standard. The values given in parentheses are for information only.

2. Referenced Documents

2.1 *ASTM Standards:*

B 880 Specification for General Requirements for Chemical Check Analysis Limits for Nickel, Nickel Alloys and Cobalt Alloys

E 8 Test Methods for Tension Testing of Metallic Materials

E 29 Practice for Using Significant Digits in Test Data to Determine Conformance with Specifications

E 76 Test Methods for Chemical Analysis of Nickel-Copper Alloys

E 112 Test Methods for Determining the Average Grain Size

E 350 Test Methods for Chemical Analysis of Carbon Steel, Low-Alloy Steel, Silicon Electrical Steel, Ingot Iron, and Wrought Iron

E 1473 Test Methods for Chemical Analysis of Nickel, Cobalt, and High-Temperature Alloys

2.2 *Military Standards:*

MIL-STD-129 Marking for Shipment and Storage

MIL-STD-271 Nondestructive Testing Requirements for Metals

3. Ordering Information

3.1 It is the responsibility of the purchaser to specify all requirements that are necessary for the safe and satisfactory performance of material ordered under this specification. Examples of such requirements include, but are not limited to, the following:

3.1.1 Alloy (Table 1).

3.1.2 Condition (Table 2).

3.1.3 Quantity (mass or number of pieces).

3.1.4 Forging, sketch or drawing.

3.1.5 *Certification* — Certification and a report of test results are required (14.1).

TABLE 1
CHEMICAL REQUIREMENTS

Element	Composition, %								
	Nickel-Copper Alloy UNS N04400	Nickel-Chromium Iron Alloy UNS N06600	Nickel-Chromium Iron Alloy UNS N06690	Nickel-Iron Chromium Alloy UNS N08120	Nickel-Iron-Chromium Alloy UNS N08800	Nickel-Iron-Chromium Alloy UNS N08810	Nickel-Chromium-Iron-Aluminum Alloy UNS N06603	Nickel-Chromium-Iron-Aluminum Alloy UNS N06025	Nickel-Chromium-Iron-Silicon Alloy UNS N06045
Nickel	63.0 min[A]	72.0 min[A]	58.0 min[A]	35.0–39.0	30.0–35.0	30.0–35.0	balance[A]	balance	45 min
Copper	28.0–34.0	0.5 max	0.5 max	0.50 max	0.75 max	0.75 max	0.5 max	0.10 max	0.3 max
Iron	2.5 max	6.0–10.0	7.0–11.0	remainder	39.5 min[A]	39.5 min[A]	8.0–11.0	8.0–11.0	21.0–25.0
Manganese	2.0 max	1.0 max	0.5 max	1.5	1.5 max	1.5 max	0.15 max	0.15	1.0
Carbon	0.3 max	0.15 max	0.05 max	0.02–0.10	0.10 max	0.05–0.10	0.20–0.40	0.15–0.25	0.05–0.12
Silicon	0.5 max	0.5 max	0.5 max	1.0	1.0 max	1.0 max	0.5 max	0.5	2.5–3.0
Sulfur, max	0.024	0.015	0.015	0.03	0.015	0.015	0.010	0.01	0.010
Chromium	...	14.0–17.0	27.0–31.0	23.0–27.0	19.0–23.0	19.0–23.0	24.0–26.0	24.0–26.0	26.0–29.0
Aluminum	...	...	...	0.40 max	0.15–0.60	0.15–0.60	2.4–3.0	1.8–2.4	...
Titanium	...	...	...	0.20 max	0.15–0.60	0.15–0.60	0.01–0.25	0.1–0.2	...
Columbium (Nb) + Tantalum	...	...	...	0.4–0.9	...	...	...	...	...
Molybdenum	...	...	...	2.50 max	...	...	...	...	...
Phosphorus	...	...	...	0.040 max	...	...	0.02 max	0.02 max	0.02 max
Tungsten	...	...	...	2.50 max	...	...	...	...	...
Cobalt, max	...	...	...	3.0	...	...	...	...	...
Vanadium, max	...	...	...	...	...	...	...	...	...
Nitrogen	...	...	...	0.15–0.30	...	...	...	...	...
Boron	...	...	...	0.010 max	...	...	...	...	...
Lanthanum	...	...	...	...	...	...	...	...	...
Aluminum + Titanium	...	...	...	...	...	...	...	...	...
Nickel + Molybdenum	...	...	...	...	...	...	...	...	...
Columbium (Nb), max	...	...	...	...	...	...	...	...	...
Tantalum	...	...	...	...	...	...	...	...	...
Zirconium, max	...	...	...	...	...	...	0.01–0.10	0.01–0.10	...
Cerium	...	...	...	...	...	...	...	...	0.03–0.09
Yttrium	...	...	...	...	...	...	0.01–0.15	0.05–0.12	...

(continued)

TABLE 1
CHEMICAL REQUIREMENTS (CONT'D)

Element	Composition, %							
	Low-Carbon Nickel-Molybdenum-Chromium-Tantalum Alloy UNS N06210	Nickel-Iron-Chromium Alloy UNS N08811	Nickel-Chromium-Molybdenum-Columbium Alloy UNS N06625	Nickel-Chromium-Molybdenum-Tungsten Alloy UNS N06110	Nickel-Iron-Chromium-Molybdenum-Copper Alloy UNS N08825	Low-Carbon Nickel-Molybdenum-Chromium Alloy UNS N10276	Low-Carbon Nickel-Molybdenum-Chromium Alloy UNS N06022	Iron-Nickel-Chromium-Molybdenum-Nitrogen Alloy UNS N08367
Nickel	remainder[A]	30.0–35.0	58.0 min[A]	51.0 min[A]	38.0–46.0	remainder[A]	remainder[A]	23.50–25.50
Copper	...	0.75 max	...	0.50 max	1.5–3.0	...	...	0.75 max
Iron	1.0 max	39.5 min.[A]	5.0 max	1.0 max	22.0 min.[A]	4.0–7.0	2.0–6.0	remainder[A]
Manganese	0.5 max	1.5 max	0.5 max	1.0 max	1.0 max	1.0 max	0.50 max	2.00 max
Carbon	0.015 max	0.06–0.10	0.10 max	0.15 max	0.05 max	0.010 max	0.015 max	0.030 max
Silicon	0.08 max	1.0 max	0.5 max	1.0 max	0.5 max	0.08 max	0.08 max	1.00 max
Sulfur, max	0.02	0.015	0.015	0.015	0.03	0.03	0.02	0.030
Chromium	18.0–20.0	19.0–23.0	20.0–23.0	28.0–33.0	19.5–23.5	14.5–16.5	20.0–22.5	20.0–22.0
Aluminum	...	0.15–0.60	0.4 max	1.0 max	0.2 max	...	...	...
Titanium	...	0.15–0.60	0.4 max	1.0 max	0.6–1.2	...	...	...
Columbium (Nb) + Tantalum	...	...	3.15–4.15	1.0 max	...	...	...	...
Molybdenum	18.0–20.0	...	8.0–10.0	9.0–12.0	2.5–3.5	15.0–17.0	12.5–14.5	6.00–7.00
Phosphorus	0.02 max	...	0.015 max	0.50 max	...	0.04 max	0.02 max	0.040 max
Tungsten	...	...	...	1.0–4.0	...	3.0–4.5	2.5–3.5	...
Cobalt, max	1.0	...	...	...	...	2.5 max	2.5 max	...
Vanadium, max	0.35	...	...	...	...	0.35	0.35	...
Nitrogen	...	...	...	...	...	...	...	0.18–0.25
Boron	...	...	...	...	...	...	...	...
Lanthanum	...	...	...	...	...	...	...	...
Aluminum + Titanium	...	0.85–1.20	...	...	...	...	...	...
Nickel + Molybdenum	...	...	...	...	...	...	...	...
Columbium (Nb), max	...	...	...	...	...	...	...	...
Tantalum	1.5–2.2	...	...	...	...	...	...	...
Zirconium, max	...	...	...	...	...	...	...	...
Cerium	...	...	...	...	...	...	...	...
Yttrium	...	...	...	...	...	...	...	...

(continued)

TABLE 1
CHEMICAL REQUIREMENTS (CONT'D)

Element	Composition, %							
	Low-Carbon Nickel-Chromium Molybdenum Alloy UNS N06059	Low-Carbon Nickel-Chromium Molybdenum Alloy UNS N06058	Low-Carbon Nickel-Chromium-Molybdenum Copper Alloy UNS N06200	Nickel Chromium Molybdenum Silicon Alloy UNS N06219	Low-Carbon Nickel-Iron Chromium-Molybdenum-Copper Alloy UNS N08031	Nickel Chromium-Tungsten-Molybdenum Alloy UNS N06230	Nickel Chromium-Cobalt-Molybdenum Alloy UNS N06617	Nickel-Molybdenum Alloy UNS N10629
Nickel	balance[A]	balance	remainder[A]	balance[A]	30.0–32.0	remainder[A]	44.5 min.	balance
Copper	0.50 max	0.50 max	1.3–1.9	0.50 max	1.0–1.4	...	0.5 max	0.5 max
Iron	1.5 max	1.5 max	3.0 max	2.0–4.0	balance[A]	3.0 max	3.0 max	1.0–6.0
Manganese	0.5 max	0.50 max	0.50 max	0.50 max	2.0 max	0.30–1.00	1.0 max	1.5
Carbon	0.010 max	0.010 max	0.010 max	0.05 max	0.015 max	0.05–0.15	0.05–0.15	0.010 max
Silicon	0.10 max	0.10 max	0.08 max	0.70–1.10	0.3 max	0.25–0.75	1.0 max	0.05
Sulfur, max	0.010	0.010	0.010	0.010	0.010	0.015	0.015	0.01
Chromium	22.0–24.0	20.0–23.0	22.0–24.0	18.0–22.0	26.0–28.0	20.0–24.0	20.0–24.0	0.5–1.5
Aluminum	0.1–0.4	0.40 max	0.50 max	0.50 max	...	0.20–0.50	0.8–1.5	0.1–0.5
Titanium	...	...	...	0.50 max	...	...	0.6 max	...
Columbium (Nb) + Tantalum	...	...	...	...	...	...	...	...
Molybdenum	15.0–16.5	19.0–21.0	15.0–17.0	7.0–9.0	6.0–7.0	1.0–3.0	8.0–10.0	26.0–30.0
Phosphorus	0.015 max	0.015 max	0.025 max	0.020 max	0.020 max	0.030 max	...	0.04 max
Tungsten	...	0.3 max	...	...	...	13.0–15.0	...	...
Cobalt, max	0.3 max	0.3 max	2.0 max	1.0 max	...	5.0 max	10.0 min–15.0 max	2.5
Vanadium, max	...	...	...	...	...	...	...	...
Nitrogen	...	0.02–0.15	...	...	0.15–0.25	...	...	...
Boron	...	...	...	...	...	0.015 max	0.006 max	...
Lanthanum	...	...	...	...	...	0.005–0.050	...	...
Aluminum + Titanium	...	...	...	...	...	...	...	...
Nickel + Molybdenum	...	...	...	...	...	...	...	...
Columbium (Nb), max	...	...	...	...	...	...	...	...
Tantalum	...	...	...	...	...	...	...	...
Zirconium, max	...	...	...	...	...	...	...	...
Cerium	...	...	...	...	...	...	...	...
Yttrium	...	...	...	...	...	...	...	...

(continued)

TABLE 1
CHEMICAL REQUIREMENTS (CONT'D)

Element	Composition, %							
	Nickel-Molybdenum Alloy UNS N10665	Nickel-Molybdenum Alloy UNS N10675	Nickel-Molybdenum Chromium-Iron Alloy UNS N10242	Low-Carbon Nickel-Chromium-Molybdenum-Tungsten Alloy UNS N06686	Nickel-Cobalt-Chromium-Silicon Alloy UNS N12160	Nickel Alloy UNS N02200	Nickel-Molybdenum-Chromium-Iron Alloy UNS N10624	Chromium-Nickel-Iron-Nitrogen Alloy UNS R20033
Nickel	remainder[A]	65.0 min	remainder[A]	remainder	remainder[A]	99.0 min[A]	remainder[A]	30.0–33.0
Copper	...	0.20 max	...	...	...	0.25 max	0.5 max	0.30–1.20
Iron	2.0 max	1.0–3.0	2.0 max	5.0 max	3.5 max	0.40 max	5.0–8.0	balance[A]
Manganese	1.0 max	3.0 max	0.80 max	0.75 max	1.5 max	0.35 max	1.0 max	2.0
Carbon	0.02 max	0.01 max	0.03 max	0.010 max	0.15 max	0.15 max	0.01 max	0.015 max
Silicon	0.10 max	0.10 max	0.80 max	0.08 max	2.4–3.0	0.35 max	0.10 max	0.50
Sulfur, max	0.03	0.010	0.015	0.02	0.015	0.01	0.01 max	0.01
Chromium	1.0 max	1.0–3.0	7.0–9.0	19.0–23.0	26.0–30.0	...	6.0–10.0	31.0–35.0
Aluminum	...	0.50 max	0.50 max	...	...	...	0.5 max	...
Titanium	...	0.20 max	...	0.02–0.25	0.20–0.80	...	...	...
Columbium (Nb) + Tantalum	...	...	...	...	...	...	...	...
Molybdenum	26.0–30.0	27.0–32.0	24.0–26.0	15.0–17.0	1.0 max	...	21.0–25.0	0.50–2.0
Phosphorus	0.04 max	0.030 max	0.030 max	0.04 max	0.030 max	...	0.025 max	0.02 max
Tungsten	...	3.0 max	...	3.0–4.4	1.0 max	...	...	...
Cobalt, max	1.00 max	3.0 max	1.00 max	...	27.0–33.0	...	1.0 max	...
Vanadium, max	...	0.20	...	...	...	...	...	...
Nitrogen	...	...	...	...	...	...	...	0.35–0.60
Boron	...	...	0.006 max	...	...	...	...	...
Lanthanum	...	...	...	...	...	...	...	...
Aluminum + Titanium	...	...	...	...	...	...	...	...
Nickel + Molybdenum	...	94.0–98.0	...	...	...	...	...	...
Columbium (Nb), max	...	0.20	...	...	1.0	...	...	...
Tantalum	...	0.20 max	...	...	...	...	...	...
Zirconium, max	...	0.10	...	...	...	...	...	...
Cerium	...	...	...	...	...	...	...	...
Yttrium	...	...	...	...	...	...	...	...

[A] Element shall be determined arithmetically by difference.

TABLE 2
MECHANICAL PROPERTY REQUIREMENTS[A]

Material and Condition	Maximum Section Thickness, in. (mm)	Tensile Strength, Min., ksi (MPa)	Yield Strength, 0.2% Offset, Min., ksi (MPa)	Elongation in 2 in. or 50 mm or 4*D*, Min., %
Nickel alloy UNS N02200, annealed	...	55 (380)	15 (105)	40
Nickel-copper alloy UNS N04400, annealed	...	70 (483)	25 (172)	35
Nickel-chromium-iron alloy UNS N06600, annealed	...	80 (552)	35 (241)	30
UNS N06690, annealed	...	85 (586)	35 (241)	30
Low-carbon nickel-chromium molybdenum				
alloy UNS N06058	...	110 (760)	52 (360)	40
alloy UNS N06059	...	100 (690)	45 (310)	45
Low-carbon nickel-chromium-molybdenum-copper alloy UNS N06200	...	100 (690)	41 (283)	45
Nickel-iron-chromium alloys:				
Annealed (alloy UNS N08120)	...	90 (621)	40 (276)	30
Annealed (alloy UNS N08800)	...	75 (517)	30 (207)	30
Annealed (alloys UNS N08810 and UNS N08811)	...	65 (448)	25 (172)	30
Nickel-chromium-molybdenum-columbium alloy UNS N06625, annealed	Up to 4 (102), incl	120 (827)	60 (414)	30
	Over 4[B] (102) to 10 (254) incl	110 (758)	50 (345)	25
Nickel-chromium-molybdenum-tungsten alloy UNS N06110, annealed	Up to 4 (102), incl	95 (655)	45 (310)	60
	Over 4 (102) to 10 (254), incl	90 (621)	40 (276)	50
Nickel-iron-chromium-molybdenum-copper alloy UNS N08825	...	85 (586)	35 (241)	30
Low-carbon nickel-molybdenum-chromium alloy UNS N10276, annealed	...	100 (690)	41 (283)	40
Low-carbon nickel-molybdenum-chromium alloy UNS N06022	...	100 (690)	45 (310)	45
Iron-nickel-chromium-molybdenum-nitrogen alloy UNS N08367	...	95 (655)	45 (310)	30
Low-carbon nickel-iron-chromium-molybdenum-copper-alloy UNS N08031	...	94 (650)	40 (276)	40
Nickel-chromium-tungsten-molybdenum alloy UNS N06230, annealed [C]	...	110 (758)	45 (310)	40
Nickel-chromium-cobalt-molybdenum alloy UNS N06617	...	95 (655)	35 (241)	35
Nickel-molybdenum alloy UNS N10665, annealed	...	110 (760)	51 (350)	40
Nickel-molybdenum alloy UNS N10675, annealed	...	110 (760)	51 (350)	40
Nickel-molybdenum-chromium-iron alloy UNS N10242, annealed	...	105 (725)	45 (310)	40
Low-carbon nickel-chromium-molybdenum-tungsten alloy UNS N06686	...	100 (690)	45 (310)	45
Nickel-cobalt-chromium-silicon alloy UNS N12160, annealed	...	90 (620)	35 (240)	40
Low-carbon chromium-nickel-iron-nitrogen alloy UNS R20033	...	109 (750)	55 (380)	40
Nickel-molybdenum alloy UNS N10629, annealed	...	110 (760)	51 (350)	40
Nickel-chromium-iron-aluminum alloy UNS N06025, annealed	Up to 4 (102), incl	98 (680)	39 (270)	30
	Over 4 (102) to 12 (305), incl	84 (580)	39 (270)	15
Nickel-chromium-iron-aluminum alloy UNS N06603, annealed	...	94 (650)	43 (300)	25
Nickel-chromium-iron-silicon alloy UNS N06045, annealed	...	90 (620)	35 (240)	35
Nickel-molybdenum-chromium-iron alloy UNS N10624, annealed	...	104 (720)	46 (320)	40
Low-carbon nickel-molybdenum-chromium-tantalum alloy UNS N06210, annealed	...	100 (690)	45 (310)	45
Nickel-chromium-molybdenum-silicon alloy UNS N06219	...	96 (680)	39 (270)	50

[A] Forging quality is furnished to chemical requirements and surface inspection only.
[B] Over 4 to 10-in. (102 to 254-mm) diameter for parts machined from forged bar.
[C] Solution annealed at a minimum temperature of 2150°F (1177°C) followed by a water quench or rapidly cooled by other means.

3.1.6 *Samples for Product (Check) Analysis* — Whether samples for product (check) analysis should be furnished (see 4.2).

3.1.7 *Purchaser Inspection* — If the purchaser wishes to witness tests or inspection of material at the place of manufacture, the purchase order must so state indicating which tests or inspections are to be witnessed (12.1).

4. Chemical Composition

4.1 The material shall conform to the composition limits specified in Table 1.

4.2 If a product (check) analysis is performed by the purchaser, the material shall conform to the product (check) analysis variations per B 880.

5. Mechanical Properties and Other Requirements

5.1 *Mechanical Properties* — The material shall conform to the mechanical properties specified in Table 2.

5.2 *Grain Size* — Annealed alloys (UNS N08810, N08120, and UNS N08811) shall conform to an average grain size of ASTM No. 5 or coarser.

6. Dimensions and Permissible Variations

6.1 Dimensions and tolerances shall be as specified on the applicable forging sketch or drawing.

7. Workmanship, Finish, and Appearance

7.1 The material shall be uniform in quality and condition, sound, and free of injurious imperfections.

8. Sampling

8.1 *Lot Definition:*

8.1.1 A lot for chemical analysis shall consist of one heat.

8.1.2 A lot for mechanical properties and grain size testing shall consist of all material from the same heat, size, finish, condition, and processed at one time.

8.2 *Test Material Selection:*

8.2.1 *Chemical Analysis* — Representative samples shall be taken during pouring or subsequent processing.

8.2.1.1 Product (check) analysis shall be wholly the responsibility of the purchaser.

8.2.2 *Mechanical Properties and Grain Size* — Samples of the material to provide test specimens for mechanical properties and grain size shall be taken from such locations in each lot as to be representative of that lot.

9. Number of Tests

9.1 *Chemical Analysis* — One test per lot.

9.2 *Mechanical Properties* — One test per lot.

9.3 *Grain Size* — For alloys N08810, N08120, and UNS N08811, one test per lot.

10. Specimen Preparation

10.1 The tension test specimen representing each lot shall be taken from a forging or from a test prolongation.

10.2 The axis of the specimen shall be located at any point midway between the center and the surface of solid forgings and at any point midway between the inner and outer surfaces of the wall of hollow forgings, and shall be parallel to the direction of greatest metal flow.

10.3 The specimens shall be the largest possible round type shown in Test Methods E 8.

11. Test Methods

11.1 The chemical composition, mechanical, and other properties of the material as enumerated in this specification shall be determined, in case of disagreement, in accordance with the following methods:

Test	ASTM Designation
Chemical analysis	E 76, E 350, E 1473
Tension	E 8
Rounding procedure	E 29
Grain size	E 112

11.2 The measurement of average grain size may be carried out by the planimetric method, the comparison method, or the intercept method described in Test Methods E 112. In case of dispute, the "referee" method for determining average grain size shall be the planimetric method.

11.3 For purposes of determining compliance with the specified limits for requirements of the properties listed in the following table, an observed value, or a calculated value, shall be rounded as indicated as follows, in accordance with the rounding method of Practice E 29:

Test	Rounded Unit for Observed or Calculated Value
Chemical composition	Nearest unit in the last right-hand place of figures of the specified limit
Tensile strength, yield strength	Nearest 1000 psi (6.9 MPa)
Elongation	Nearest 1%
Grain size:	
0.0024 in. (0.060 mm) or larger	Nearest multiple of 0.0002 in. (0.005 mm)
less than 0.0024 in. (0.060 mm)	Nearest multiple of 0.0001 in. (0.002 mm)

12. Inspection

12.1 Inspection of the material by the purchaser shall be made as agreed upon between the purchaser and the seller as part of the purchase contract.

13. Rejection and Rehearing

13.1 Material, tested by the purchaser, that fails to conform to the requirements of this specification may be rejected. Rejection should be reported to the producer or supplier promptly and in writing. In case of dissatisfaction with the results of the test, the producer or supplier may make claim for a rehearing.

14. Certification

14.1 A manufacturer's certification shall be furnished to the purchaser stating that material has been manufactured, tested, and inspected in accordance with this specification, and that the test results on representative samples meet specification requirements. A report of the test results shall be furnished.

15. Product Marking

15.1 The material shall be marked legibly with the name of the material, this specification number, the heat number and condition, and such other information as may be defined in the contract or order.

16. Keywords

16.1 nickel alloy forgings

SPECIFICATION FOR UNS N06002, UNS N06230, UNS N12160, AND UNS R30556 ROD

SB-572

(Identical with ASTM Specification B 572-97.)

1. Scope

1.1 This specification covers alloys UNS N06002, UNS N06230, UNS N12160, and UNS R30556 in the form of rod for heat resisting and general corrosive service.

1.2 The following products are covered under this specification:

1.2.1 Rods $^{5}/_{16}$ to $^{3}/_{4}$ in. (7.94 to 19.05 mm) exclusive in diameter, hot or cold finished, solution-annealed, and pickled or mechanically descaled.

1.2.2 Rods $^{3}/_{14}$ to $3^{1}/_{2}$ in. (19.05 to 88.9 mm) inclusive in diameter, hot or cold finished, solution annealed, ground, or turned.

1.3 The values stated in inch-pound units are to be regarded as the standard. The values given in parentheses are for information only.

2. Referenced Documents

2.1 *ASTM Standards:*

E 8 Test Methods for Tension Testing of Metallic Materials

E 29 Practice for Using Significant Digits in Test Data to Determine Conformance With Specifications

E 55 Practice for Sampling Wrought Nonferrous Metals and Alloys for Determination of Chemical Composition

E 354 Test Methods for Chemical Analysis of High-Temperature, Electrical, Magnetic, and Other Similar Iron, Nickel, and Cobalt Alloys

3. Terminology

3.1 *Description of Term Specific to This Standard*

3.1.1 *rod* — product of round solid section furnished in straight lengths.

4. Ordering Information

4.1 It is the responsibility of the purchaser to specify all requirements that are necessary for the safe and satisfactory performance of material ordered under this specification. Examples of such requirements include, but are not limited to, the following:

4.1.1 Alloy.

4.1.2 Dimensions — Nominal diameter and length. The shortest useable multiple length shall be specified (Table 5).

4.1.3 Certification — State if certification or a report of test results is required (Section 16).

4.1.4 Purchaser Inspection — State which tests or inspections are to be witnessed (Section 13).

4.1.5 Samples for Product (Check) Analysis — State whether samples shall be furnished (9.2.2).

5. Chemical Composition

5.1 The material shall conform to the requirements as to chemical composition prescribed in Table 1.

5.2 If a product (check) analysis is made by the purchaser, the material shall conform to the requirements specified in Table 1 subject to the permissible tolerances in Table 2.

6. Mechanical and Other Requirements

6.1 The mechanical properties of the material at room temperature shall conform to the those shown in Table 3.

6.2 *Grain Size* — Annealed alloy (UNS N12160) shall conform to an average grain size of ASTM Number 5 or coarser.

TABLE 1
CHEMICAL REQUIREMENTS

Element	Composition Limits, %			
	UNS N06002	UNS N06230	UNS N12160	UNS R30556
Nickel	Remainder [Note (1)]	Remainder [Note (1)]	Remainder [Note (1)]	19.0–22.5
Iron	17.0–20.0	3.0 max	3.5 max	Remainder [Note (1)]
Chromium	20.5–23.0	20.0–24.0	26.0–30.0	21.0–23 .0
Cobalt	0.5–2.5	5.0 max	27.0–33.0	16.0–21.0
Molybdenum	8.0–10.0	1.0–3.00	1.0 max	2.5–4.0
Tungsten	0.2–1.0	13.0–15.0	1.0 max	2.0–3.5
Carbon	0.05–0.15	0.05–0.15	0.15 max	0.05–0.15
Silicon	1.00 max	0.25–0.75	2.4–3.0	0.20–0.80
Manganese	1.00 max	0.30–1.00	1.5 max	0.50–2.00
Phosphorus	0.04	0.30 max	0.030 max	0.04 max
Sulfur	0.03	0.015 max	0.015 max	0.015 max
Columbium	...	...	1.0 max	0.30 max
Tantalum	...	...	...	0.30–1.25
Aluminum	...	0.20–0.50	...	0.10–0.50
Zirconium	...	...	...	0.001–0.10
Lanthanum	...	0.005–0.050	...	0.005–0.10
Nitrogen	...	...	...	0.10–0.30
Boron	...	0.015 max	...	0.02 max
Titanium	...	...	0.20–0.80	...

NOTE:
(1) See 12.1.1.

7. Dimensions, Mass, and Permissible Variations

7.1 *Diameter* — The permissible variations from the specified diameter shall be as prescribed in Table 4.

7.2 *Out-of-Roundness* — The permissible variation in roundness shall be as prescribed in Table 4.

7.3 *Machining Allowances* — When the surfaces of finished material are to be machined, the following allowances are suggested for normal machining operations:

7.3.1 *As-finished* (Annealed and Descaled) — For diameters of $^{5}/_{16}$ to $^{11}/_{16}$ in. (7.94 to 17.46 mm) inclusive, an allowance of $^{1}/_{16}$ in. (1.59 mm) on the diameter should be made for finish machining.

7.4 *Length:*

7.4.1 Unless multiple, nominal, or cut lengths are specified, random mill lengths shall be furnished.

7.4.2 The permissible variations in length of multiple, nominal, or cut length rod shall be as prescribed in Table 5. Where rods are ordered in multiple length, a $^{1}/_{4}$-in. (6.35-mm) length addition shall be allowed for each uncut multiple length.

7.5 *Ends:*

7.5.1 Rods ordered to random or nominal lengths shall be furnished with either cropped or sawed ends.

7.5.2 Rods ordered to cut lengths shall be furnished with square saw cut or machined ends.

7.6 *Weight* — For calculations of mass or weight, the following densities shall be used:

Alloy	Density	
	lb/in.^{3}	g/cm^3
N06002	0.297	(8.23)
N06230	0.319	(8.83)
N12160	0.292	(8.08)
R30556	0.297	(8.23)

7.7 *Straightness* — The maximum curvature (depth of chord) shall not exceed 0.050 in. multiplied by the length of the chord in feet (0.004 mm multiplied by the length in centimetres).

8. Workmanship, Finish, and Appearance

8.1 The material shall be uniform in quality and condition, smooth, and free of injurious defects.

9. Sampling

9.1 *Lots for Chemical and Mechanical Testing:*

9.1.1 A lot for chemical analysis shall consist of one heat.

9.1.2 A lot of bar for mechanical testing shall be defined as the material from one heat in the same condition and specified diameter.

TABLE 2
PRODUCT (CHECK) ANALYSIS TOLERANCE

Element	Tolerance Over the Maximum or Under the Minimum Limit, %			
	UNS N06002	UNS N06230	UNS N12160	UNS R30556
Nickel	...	...	...	0.20 under min. 0.25 over max
Iron	0.30	0.07 over max	0.07 over max	...
Chromium	0.25	0.25	0.30	0.25
Cobalt	0.03 under min. 0.05 over max	0.05 over max	0.30 under min. 0.35 over max	0.20 under min. 0.25 over max
Molybdenum	0.15	0.03 under min. 0.05 over max	0.03 over max	0.05 under min. 0.10 over max
Tungsten	0.04	0.25	0.04 over max	0.10 under min. 0.15 over max
Carbon	0.01	0.01	0.01 over max	0.01
Silicon	0.05	0.02 under min. 0.05 over max	0.10	0.02 under min. 0.05 over max
Manganese	0.03	0.03	0.04 over max	0.03 under min. 0.04 over max
Phosphorus	0.005	0.005	0.005	0.005
Sulfur	0.005	0.003	0.003	0.003
Columbium (Nb) + Tantalum	...	...	0.05 over max	0.05
Aluminum	...	0.05	...	0.02 under min. 0.05 over max
Lanthanum	...	0.005	...	...
Boron	...	0.005	...	...
Titanium			0.03 under min. 0.04 over max	

9.2 *Sampling for Chemical Analysis:*

9.2.1 A representative sample shall be obtained from each heat during pouring or subsequent processing.

9.2.2 Product (check) analysis shall be wholly the responsibility of the purchaser.

9.3 *Sampling for Mechanical Testing* — A representative sample shall be taken from each lot of finished material.

10. Number of Tests and Retests

10.1 *Chemical Analysis* — One test per heat.

10.2 *Tension Tests* — One test per lot.

10.3 *Retests* — If the specimen used in the mechanical test of any lot fails to meet the specified requirements, two additional specimens shall be taken from different sample pieces and tested. The results of the tests on both of these specimens shall meet the specified requirements.

11. Specimen Preparation

11.1 Tension test specimens shall be taken from material after final heat treatment and tested in the direction of fabrication.

11.2 Tension test specimens shall be any of the standard or subsized specimens shown in Test Methods E 8.

TABLE 3
MECHANICAL PROPERTY REQUIREMENTS

UNS	Tensile Strength, Min., ksi (MPA)	Yield Strength (0.2% Offset), Min., ksi (MPa)	Elongation in 2 in. (50.8 mm) or 4*D*, [Note (1)] Min., %
N06002	95 (660)	35 (240)	35
N06230 [Note (2)]	110 (760)	45 (310)	40
N12160 [Note (3)]	90 (620)	35 (240)	40
R30556 [Note (4)]	100 (690)	45 (310)	40

NOTES:
(1) *D* refers to the diameter of the tension specimen.
(2) Solution annealed at a temperature between 2200 to 2275°F (1,204 to 1,1246°C), followed by water quench or rapidly cooled by other means.
(3) Solution annealed at 1,950°F (1,065°C) minimum.
(4) Solution annealed at 2,100°F (1,150°C) minimum.

TABLE 4
PERMISSIBLE VARIATIONS IN DIAMETER AND OUT-OF-ROUNDNESS OF FINISHED RODS

Specified Diameter, in. (mm)	Permissible Variations, in. (mm)		
	Diameter		
	+	−	Out of Roundness, Max
Hot-Finished, Annealed, and Descaled Rods			
5/16 to 7/16 (7.94–11.11), incl	0.012 (0.30)	0.012 (0.30)	0.018 (0.46)
Over 7/16 to 5/8 (11.11–15.87), incl	0.014 (0.36)	0.014 (0.36)	0.020 (0.51)
Over 5/8 to 3/4 (15.87–19.05), excl	0.016 (0.41)	0.016 (0.41)	0.024 (0.61)
Hot-Finished, Annealed, and Ground or Turned Rods			
3/4 to 3 1/2 (19.05–88.9), incl	0.010 (0.25)	0	0.008 (0.20)

TABLE 5
PERMISSIBLE VARIATIONS IN LENGTH OF RODS

Random mill lengths	2 to 12 ft (610 to 3,660 mm) long with not more than 25 weight % under 4 ft (1.22 m).
Multiple lengths	Furnished in multiples of a specified unit length, within the length limits indicated above. For each multiple, an allowance of 1/4 in. (6.35 mm) shall be made for cutting, unless otherwise specified. At the manufacturer's option, individual specified unit lengths may be furnished.
Nominal lengths	Specified nominal lengths having a range of not less than 2 ft (610 mm) with no short lengths allowed.
Cut lengths	A specified length to which all rods shall be cut with a permissible variation of + 1/8 in. (3.17 mm) − 0.

11.3 In the event of disagreement, the referee specimen shall be the largest possible round specimen shown in Tes Methods E 8.

12. Test Methods

12.1 The chemical composition and mechanical properties of the material as enumerated in this specification shall be determined, in case of disagreement, in accordance with the following ASTM methods:

12.1.1 *Chemical Analysis* — Test Methods E 354. For elements not covered by Test Methods E 354, the referee method shall be as agreed upon between the manufacturer and the purchaser. The composition of the remainder element shall be determined arithmetically by difference.

12.1.2 *Tension Test* — Test Methods E 8.

12.1.3 *Method of Sampling* — Practice E 55.

12.1.4 *Determining Significant Places* — Practice E 29.

12.2 For purposes of determining compliance with the limits in this specification, an observed value or a calculated value shall be rounded in accordance with the rounding method of Practice E 29:

Requirements	Rounded Unit for Observed or Calculated Value
Chemical composition and tolerance	Nearest unit in the last right-hand place of figures of the specified limit
Tensile strength and yield strength	Nearest 1000 psi (7 MPa)
Elongation	Nearest 1%

13. Inspection

13.1 Inspection of the material shall be made as agreed upon between the manufacturer and the purchaser as part of the purchase contract.

14. Rejection and Rehearing

14.1 Material, tested by the purchaser, that fails to conform to the requiremetns of this specification may be rejected. Rejection should be reported to the producer or supplier promptly and in writing. In case of dissatisfaction with the results of the test, the producer or supplier may make claim for a rehearing.

15. Certification

15.1 When specified in the purchase order or contract, a manufacturer's certification shall be furnished to the purchaser stating that material has been manufactured, tested, and inspected in accordance with this specification, and that the test results on representative samples meet specification requirements. When specified in the purchase order or contract, a report of the test results shall be furnished.

16. Product Marking

16.1 Each piece of material $\frac{1}{2}$ in. (12.7 mm) and over in diameter shall be marked with this specification number, alloy, name of the material, and size of the product.

16.2 Each bundle or shipping container shall be marked with the name of the material; the specification number alloy; the size; gross, tare, and net weight; consignor and consignee address; contract or order number; and such other information as may be defined in the contract or order.

APPENDIX

(Nonmandatory Information)

X1. HEAT TREATMENT

X1.1 Proper heat treatment during or subsequent to fabrication is necessary for optimum performance, and the manufacturer shall be consulted for details.

SPECIFICATION FOR NICKEL-MOLYBDENUM-CHROMIUM-IRON ALLOYS (UNS N10003, N10242) ROD

SB-573

(Identical with ASTM Specification B 573-00 except that certification has been made mandatory.)

1. Scope

1.1 This specification covers nickel-molybdenum-chromium-iron alloys (UNS N10003 and UNS N10242) rod for use in general corrosive service.

1.2 The following products are covered under this specification:

1.2.1 Rods $^{5}/_{16}$ to $^{3}/_{4}$ in. (7.94 to 19.05 mm) excl in diameter, hot or cold finished, annealed, and pickled or mechanically descaled.

1.2.2 Rods $^{3}/_{4}$ to $3^{1}/_{2}$ in. (19.05 to 88.9 mm) incl in diameter, hot or cold finished, annealed, ground, or turned.

1.3 The values stated in inch-pound units are to be regarded as the standard.

2. Referenced Documents

2.1 *ASTM Standards:*

B 880 Specification for General Requirements for Chemical Check Analysis Limits for Nickel, Nickel Alloys, and Cobalt Alloys

E 8 Test Methods for Tension Testing of Metallic Materials

E 29 Practice for Using Significant Digits in Test Data to Determine Conformance With Specifications

E 1473 Test Methods for Chemical Analysis of Nickel, Cobalt, and High-Temperature Alloys

3. Terminology

3.1 *Description of Term Specific to This Standard:*

3.1.1 *rod* — a product of round solid section furnished in straight lengths.

4. Ordering Information

4.1 It is the responsibility of the purchaser to specify all requirements that are necessary for the safe and satisfactory performance of material ordered under this specification. Examples of such requirements include but are not limited to the following:

4.1.1 *Dimensions* — nominal diameter and length. The shortest usable multiple length shall be specified (Table 1).

4.1.2 *Certification* — Certification and a report of test results are required (Section 15).

4.1.3 *Purchaser Inspection* — State which tests or inspections are to be witnessed (Section 13).

TABLE 1
PERMISSIBLE VARIATIONS IN LENGTH OF RODS

Random mill lengths	2 to 12 ft (610 to 3,660 mm) long with not more than 25 weight % under 4 ft (1.22 m).
Multiple lengths	Furnished in multiples of a specified unit length, within the length limits indicated above. For each multiple, an allowance of $^{1}/_{4}$ in. (6.35 mm) shall be made for cutting, unless otherwise specified. At the manufacturer's option, individual specified unit lengths may be furnished.
Nominal lengths	Specified nominal lengths having a range of not less than 2 ft (610 mm) with no short lengths allowed.
Cut lengths	A specified length to which all rods shall be cut with a permissible variation of $+ {}^{1}/_{8}$ in. (3.17 mm) − 0.

TABLE 2
CHEMICAL REQUIREMENTS

Element	Composition, % UNS N10242	UNS N10003
Chromium	7.0–9.0	6.0–8.0
Iron, max	2.0	5.0
Carbon	0.03 max	0.04–0.08
Silicon, max	0.80	1.00
Cobalt, max	1.00	0.20
Manganese, max	0.80	1.00
Tungsten, max	...	0.50
Vanadium, max	...	0.50
Molybdenum	24.0–26.0	15.0–18.0
Phosphorus, max	0.030	0.015
Sulfur, max	0.015	0.020
Aluminum plus titanium, max	...	0.50
Copper, max	0.50	0.35
Boron, max	0.006	0.010
Nickel	remainder	remainder
Aluminum, max	0.50	...

4.1.4 *Samples for Product (Check) Analysis* — State whether samples shall be furnished (9.2.2).

5. Chemical Composition

5.1 The material shall conform to the requirements as to chemical composition prescribed in Table 2.

5.2 If a product (check) analysis is made by the purchaser, the material shall conform to the requirements specified in Table 2 subject to the permissible tolerances in B 880.

6. Mechanical Properties and Other Requirements

6.1 The mechanical properties of the material at room temperature shall conform to those shown in Table 3.

7. Dimensions and Permissible Variations

7.1 *Diameter* — The permissible variations from the specified diameter shall be as prescribed in Table 4.

7.2 *Out-of-Roundness* — The permissible variation in roundness shall be as prescribed in Table 4.

7.3 *Machining Allowances* — When the surfaces of finished material are to be machined, the following allowances are suggested for normal machining operations:

7.3.1 *As-finished (Annealed and Descaled)* — For diameters of $^{5}/_{16}$ to $^{11}/_{16}$ in. (7.94 to 17.46 mm) incl, an allowance of $^{1}/_{16}$ in. (1.59 mm) on the diameter should be made for finish machining.

TABLE 3
MECHANICAL PROPERTY REQUIREMENTS

UNS	Tensile Strength, min., ksi (MPa)	Yield Strength, (0.2% Offset), min, ksi (MPa)	Elongation in 2 in. (50.8 mm) or $4D$[A], min, %
N10003	100 000 (690)	40 000 (280)	35
N10242	105 000 (725)	45 000 (310)	40

[A] $4D$ — D refers to the diameter of the tension specimen.

7.4 *Length:*

7.4.1 Unless multiple, nominal, or cut lengths are specified, random mill lengths shall be furnished.

7.4.2 The permissible variations in length of multiple, nominal, or cut length rod shall be as prescribed in Table 1. Where rods are ordered in multiple lengths, $^{1}/_{4}$ in. (6.35 mm) length addition shall be allowed for each uncut multiple length.

7.5 *Ends:*

7.5.1 Rods ordered to random or nominal lengths shall be furnished with either cropped or sawed ends.

7.5.2 Rods ordered to cut lengths shall be furnished with square saw cut or machined ends.

7.6 *Weight* — For calculation of mass or weight, the following densities shall be used:

Alloy	lb/in^3	g/cm^3
N10003	0.317	8.76
N10242	0.327	9.05

7.7 *Straightness* — The maximum curvature (depth of chord) shall not exceed 0.050 in. multiplied by the length of the chord in feet (0.04 mm multiplied by the length in centimetres).

8. Workmanship, Finish, and Appearance

8.1 The material shall be uniform in quality and condition, smooth, and free of injurious imperfections.

9. Sampling

9.1 *Lots for Chemical Analysis and Mechanical Testing:*

9.1.1 A lot for chemical analysis shall consist of one heat.

9.1.2 A lot of bar for mechanical testing shall be defined as the material from one heat in the same condition and specified diameter.

TABLE 4
PERMISSIBLE VARIATIONS IN DIAMETER AND OUT-OF-ROUNDNESS OF FINISHED RODS

Specified Dia, in. (mm)	Permissible Variations, in. (mm)		
	Dia		Out Of Roundness, Max
	Plus	Minus	
Hot-Finished, Annealed, and Descaled Rods			
5/16 to 7/16 (7.94 to 11.11) incl	0.012 (0.30)	0.012 (0.30)	0.018 (0.46)
Over 7/16 to 5/8 (11.11 to 15.87) incl	0.014 (0.36)	0.014 (0.36)	0.020 (0.51)
Over 5/8 to 3/4 (15.87 to 19.05) excl	0.016 (0.41)	0.016 (0.41)	0.024 (0.61)
Hot-Finished, Annealed, and Ground or Turned Rods			
3/4 to 3 1/2 (19.05–88.9) incl	0.010 (0.25)	0	0.008 (0.20)

9.2 *Sampling for Chemical Analysis:*

9.2.1 A representative sample shall be obtained from each heat during pouring or subsequent processing.

9.2.2 Product (check) analysis shall be wholly the responsibility of the purchaser.

9.3 *Sampling for Mechanical Testing* — A representative sample shall be taken from each lot of finished material.

10. Number of Tests and Retests

10.1 *Chemical Analysis* — One test per heat.

10.2 *Tension Tests* — One test per lot.

10.3 *Retests* — If the specimen used in the mechanical test of any lot fails to meet the specified requirements, two additional specimens shall be taken from different sample pieces and tested. The results of the tests on both of these specimens shall meet the specified requirements.

11. Specimen Preparation

11.1 Tension test specimens shall be taken from material after final heat treatment and tested in the direction of fabrication.

11.2 Tension test specimens shall be any of the standard or subsized specimens shown in Test Methods E 8.

11.3 In the event of disagreement, the referee specimen shall be the largest possible round specimen shown in Test Methods E 8.

12. Test Methods

12.1 The chemical composition and mechanical properties of the material as enumerated in this specification shall be determined, in case of disagreement, in accordance with the following ASTM methods:

12.1.1 *Chemical Analysis* — Test Methods E 1473.

12.1.2 *Tension Test* — Test Methods E 8.

12.1.3 *Determining Significant Places* — Practice E 29.

12.2 For purposes of determining compliance with the limits in this specification, an observed value or a calculated value shall be rounded in accordance with the rounding method of Practice E 29:

Requirements	Rounded Unit for Observed or Calculated Value
Chemical composition and tolerance	Nearest unit in the last right-hand place of figures of the specified limit
Tensile strength and yield strength	Nearest 1,000 psi (7 MPa)
Elongation	Nearest 1%

13. Inspection

13.1 Inspection of the material shall be made as agreed upon between the manufacturer and the purchaser as part of the purchase contract.

14. Rejection and Rehearing

14.1 Material tested by the purchaser that fails to conform to the requirements of this specification may be rejected. Rejection should be reported to the producer or supplier promptly and in writing. In case of dissatisfaction with the results of the test, the producer or supplier may make claim for a rehearing.

15. Certification

15.1 The manufacturer's certification shall be furnished to the purchaser stating that material has been

manufactured, tested, and inspected in accordance with this specification, and that the test results on representative samples meet specification requirements. A report of the test results shall be furnished.

16. Product Marking

16.1 Each piece of material ½ in. (12.7 mm) or over in diameter shall be marked with this specification number, name of the material, and size of the product.

16.2 Each bundle or shipping container shall be marked with the name of the material; this specification number; the size; gross, tare, and net weight; consignor and consignee address; contract or order number; and such other information as may be defined in the contract or order.

17. Keywords

17.1 rod; UNS N10003; UNS N10242

APPENDIX

(Nonmandatory Information)

X1. HEAT TREATMENT

X1.1 Proper heat treatment during or subsequent to fabrication is necessary for optimum performance, and the manufacturer shall be consulted for details.

SPECIFICATION FOR LOW-CARBON NICKEL-MOLYBDENUM-CHROMIUM, LOW-CARBON NICKEL-CHROMIUM-MOLYBDENUM, LOW-CARBON NICKEL-MOLYBDENUM-CHROMIUM-TANTALUM, LOW-CARBON NICKEL-CHROMIUM-MOLYBDENUM-COPPER, AND LOW-CARBON NICKEL-CHROMIUM-MOLYBDENUM-TUNGSTEN ALLOY ROD



SB-574

(Identical with ASTM Specification B 574-99 except that certification has been made mandatory.)

1. Scope

1.1 This specification covers rod of low-carbon nickel-molybdenum-chromium alloys (UNS N10276, N06022, and N06455), low-carbon nickel-chromium-molybdenum alloy (UNS N06059), low-carbon nickel-molybdenum-chromium-tantalum (UNS N06210), low-carbon nickel-chromium-molybdenum-copper alloy (UNS N06200), and low-carbon nickel-chromium-molybdenum-tungsten (UNS N06686) as shown in Table 1, for use in general corrosive service.

1.2 The following products are covered under this specification:

1.2.1 Rods $^{5}/_{16}$ to $^{3}/_{4}$ in. (7.94 to 19.05 mm), exclusive, in diameter, hot or cold finished, solution annealed and pickled, or mechanically descaled.

1.2.2 Rods $^{3}/_{4}$ to $3^{1}/_{2}$ in. (19.05 to 88.9 mm), inclusive, in diameter, hot or cold finished, solution annealed, ground or turned.

1.3 The values stated in inch-pound units are to be regarded as the standard. The values given in parentheses are for information only.

2. Referenced Documents

2.1 *ASTM Standards:*

E 8 Test Methods for Tension Testing of Metallic Materials

E 29 Practice for Using Significant Digits in Test Data to Determine Conformance with Specifications

E 55 Practice for Sampling Wrought Nonferrous Metals and Alloys for Determination of Chemical Composition

E 1473 Test Methods for Chemical Analysis of Nickel, Cobalt, and High-Temperature Alloys

3. Terminology

3.1 *Definitions of Term Specific to This Standard:*

3.1.1 *rod* — a product of round solid section furnished in straight lengths.

4. Ordering Information

4.1 It is the responsibility of the purchaser to specify all requirements that are necessary for the safe and satisfactory performance of material ordered under this specification. Examples of such requirements include, but are not limited to, the following:

4.1.1 *Alloy* — Table 1.

4.1.2 *Dimensions* — Nominal diameter and length. The shortest usable multiple length should be specified (Table 2).

TABLE 1
CHEMICAL REQUIREMENTS

Element	Composition Limits, %						
	Alloy N10276	Alloy N06022	Alloy N06455	Alloy N06059	Alloy N06200	Alloy N06210	Alloy N06686
Molybdenum	15.0–17.0	12.5–14.5	14.0–17.0	15.0–16.5	15.0–17.0	18.0–20.0	15.0–17.0
Chromium	14.5–16.5	20.0–22.5	14.0–18.0	22.0–24.0	22.0–24.0	18.0–20.0	19.0–23.0
Iron	4.0–7.0	2.0–6.0	3.0 max	1.5 max	3.0 max	1.0 max	5.0 max
Tungsten	3.0–4.5	2.5–3.5	...	...	...	...	3.0–4.4
Cobalt, max	2.5	2.5	2.0	0.3	2.0 max	1.0	...
Carbon, max	0.010	0.015	0.015	0.010	0.010	0.015	0.010
Silicon, max	0.08	0.08	0.08	0.10	0.08	0.08	0.08
Manganese, max	1.0	0.50	1.0	0.5	0.50	0.5	0.75
Vanadium, max	0.35	0.35	...	...	...	0.35	...
Phosphorus, max	0.04	0.02	0.04	0.015	0.025	0.02	0.04
Sulfur, max	0.03	0.02	0.03	0.010	0.010	0.02	0.02
Titanium	...	...	0.7 max	...	...	...	0.02–0.25
Nickel	Remainder[A]	Remainder[A]	Remainder[A]	Bal	Remainder[A]	Remainder[A]	Remainder[A]
Aluminum	...	...	...	0.1–0.4	0.50 max	...	...
Copper	...	...	...	0.50 max	1.3–1.9	...	...
Tantalum	...	...	...	...	...	1.5–2.2	...

[A] See 12.1.1.

TABLE 2
PERMISSIBLE VARIATIONS IN DIAMETER AND OUT-OF-ROUNDNESS OF FINISHED RODS

Specified Diameter, in. (mm)	Permissible Variations, in. (mm)		
	Diameter		
	+	–	Out of Roundness, Max
Hot-Finished, Annealed, and Descaled Rods			
5/16–7/16 (7.94–11.11), incl	0.012 (0.30)	0.012 (0.30)	0.018 (0.46)
Over 7/16–5/8 (11.11–15.87), incl	0.014 (0.36)	0.014 (0.36)	0.020 (0.51)
Over 5/8–3/4 (15.87–19.05), excl	0.016 (0.41)	0.016 (0.41)	0.024 (0.61)
Hot-Finished, Annealed, and Ground or Turned Rods			
3/4–3 1/2 (19.05–88.9),incl	0.010 (0.25)	0	0.008 (0.20)

4.1.3 *Certification* — Certification and a report of test results are required (Section 15).

4.1.4 *Purchaser Inspection* — State which tests or inspections are to be witnessed (Section 13).

4.1.5 *Samples for Product (Check) Analysis* — State whether samples shall be furnished (9.2.2).

5. Chemical Composition

5.1 The material shall conform to the composition limits specified in Table 1.

5.2 If a product (check) analysis is made by the purchaser, the material shall conform to the requirements specified in Table 1 subject to the permissible tolerances in Table 3.

6. Mechanical Properties and Other Requirements

6.1 The mechanical properties of the material at room temperature shall conform to those shown in Table 4.

7. Dimensions and Permissible Variations

7.1 *Diameter* — The permissible variations from the specified diameter shall be as prescribed in Table 2.

7.2 *Out of Roundness* — The permissible variation in roundness shall be as prescribed in Table 2.

7.3 *Machining Allowances* — When the surfaces of finished material are to be machined, the following allowances are suggested for normal machining operations.

TABLE 3
PRODUCT (CHECK) ANALYSIS TOLERANCES

Element	Tolerances, Over Max or Under Min., Limit, %						
	Alloy N10276	Alloy N06022	Alloy N06455	Alloy N06059	Alloy N06200	Alloy N06210	Alloy N06686
Molybdenum	0.15	0.15	0.15	0.15	0.15	[A]	0.15
Chromium, under min.	0.15	0.25	0.15	0.25	0.25	0.25	0.25
Over max	0.25	0.25	0.25	0.25	0.25	0.25	0.25
Iron, under min.	0.07	0.05	...	...	...	0.05	...
Over max	0.10	0.10	0.07	0.05	0.10	0.05	0.07
Tungsten, under min.	0.10	0.10	...	...	...	...	0.10
Over max	0.15	0.15	...	...	...	...	0.15
Cobalt	0.05	0.05	0.05	0.03	0.05	[B]	...
Carbon	0.005	0.005	0.005	0.005	0.005	0.005	0.005
Silicon	0.02	0.02	0.02	0.02	0.02	0.02	0.02
Manganese	0.03	0.03	0.03	0.03	0.03	0.03	0.03
Vanadium	0.04	0.04	...	...	...	0.04	...
Phosphorus	0.005	0.005	0.005	0.005	0.005	0.005	0.005
Sulfur	0.005	0.003	0.005	0.003	0.003	0.003	0.003
Titanium	...	...	0.04	...	...	...	[C]
Aluminum	...	...	...	0.05	0.05	...	...
Copper	...	...	...	...	0.05	...	...
Tantalum	...	...	...	...	...	0.10	...

[A] Under min.— 0.15; over max — 0.25.
[B] Over max — 0.05.
[C] Under min— 0.02; over max — 0.03.

TABLE 4
MECHANICAL PROPERTY REQUIREMENTS

Alloy	Tensile Strength, Min., psi (MPa)	Yield Strength (0.2% Offset), Min., psi (MPa)	Elongation in 2 in. (50.8 mm) or $4D$[A] Min., %
N10276	100,000 (690)	41,000 (283)	40
N06022	100,000 (690)	45,000 (310)	45
N06455	100,000 (690)	40,000 (276)	40
N06059	100,000 (690)	45,000 (310)	45
N06200	100,000 (690)	41,000 (283)	45
N06686	100,000 (690)	45,000 (310)	45
N06210	100,000 (690)	45,000 (310)	45

[A] D refers to the diameter of the tension specimen.

7.3.1 *As-finished (Annealed and Descaled)* — For diameters of $^{5}/_{16}$ to $^{11}/_{16}$ in. (7.94 to 17.46 mm) inclusive, an allowance of $^{1}/_{16}$ in. (1.59 mm) on the diameter should be made for finish machining.

7.4 *Length:*

7.4.1 Unless multiple, nominal, or cut lengths are specified, random mill lengths shall be furnished.

7.4.2 The permissible variations in length of multiple, nominal, or cut length rod shall be as prescribed in Table 5. Where rods are ordered in multiple lengths, a $^{1}/_{4}$-in. (6.35-mm) length addition shall be allowed for each uncut multiple length.

7.5 *Ends:*

7.5.1 Rods ordered to random or nominal lengths shall be furnished with either cropped or sawed ends.

7.5.2 Rods ordered to cut lengths shall be furnished with square sawcut or machined ends.

TABLE 5
PERMISSIBLE VARIATIONS IN LENGTH OF RODS

Random mill lengths	2 to 12 ft (610 to 3,660 mm) long with not more than 25 weight % under 4 ft (1.22 m).
Multiple lengths	Furnished in multiples of a specified unit length, within the length limits indicated above. For each multiple, an allowance of $\frac{1}{4}$ in. (6.35 mm) shall be made for cutting, unless otherwise specified. At the manufacturer's option, individual specified unit lengths may be furnished.
Nominal lengths	Specified nominal lengths having a range of not less than 2 ft (610 mm) with no short lengths allowed.
Cut lengths	A specified length to which all rods shall be cut with a permissible variation of $\pm\frac{1}{8}$ in. (3.17 mm) −0.

7.6 *Weight* — For calculations of mass or weight, the following densities shall be used:

	Density	
Alloy	lb/in.^{3}	g/cm^3
N10276	0.321	8.87
N06022	0.314	8.69
N06455	0.312	8.64
N06059	0.311	8.6
N06200	0.307	8.50
N06686	0.315	8.73
N06210	0.316	8.76

7.7 *Straightness* — The maximum curvature (depth of chord) shall not exceed 0.050 in. multiplied by the length of the chord in feet (0.04 mm multiplied by the length in centimeters).

8. Workmanship, Finish, and Appearance

8.1 The material shall be uniform in quality and condition, smooth, and free of injurious imperfections.

9. Sampling

9.1 *Lots for Chemical Analysis and Mechanical Testing:*

9.1.1 A lot for chemical analysis shall consist of one heat.

9.1.2 A lot of bar for mechanical testing shall be defined as the material from one heat in the same condition and specified diameter.

9.2 *Sampling for Chemical Analysis:*

9.2.1 A representative sample shall be obtained from each heat during pouring or subsequent processing.

9.2.2 Product (check) analysis shall be wholly the responsibility of the purchaser.

9.3 *Sampling for Mechanical Testing* — A representative sample shall be taken from each lot of finished material.

10. Number of Tests and Retests

10.1 *Chemical Analysis* — One test per heat.

10.2 *Tension Tests* — One test per lot.

10.3 *Retests* — If the specimen used in the mechanical test of any lot fails to meet the specified requirements, two additional specimens shall be taken from different sample pieces and tested. The results of the tests on both of these specimens shall meet the specified requirements.

11. Specimen Preparation

11.1 Tension test specimens shall be taken from material after final heat-treatment and tested in the direction of fabrication.

11.2 Tension test specimens shall be any of the standard or subsized specimens shown in Test Methods E 8.

11.3 In the event of disagreement, the referee specimen shall be the largest possible round specimen shown in Test Methods E 8.

12. Test Methods

12.1 The chemical composition and mechanical properties of the material as enumerated in this specification shall be determined, in case of disagreement, in accordance with the following ASTM methods:

12.1.1 *Chemical Analysis* — Test Methods E 1473. For elements not covered by Test Methods E 1473, the referee method shall be as agreed upon between the manufacturer and the purchaser. The nickel composition shall be determined arithmetically by difference.

12.1.2 *Tension Test* — Test Methods E 8.

12.1.3 *Method of Sampling* — Practice E 55.

12.1.4 *Determining Significant Places* — Practice E 29.

12.2 For purposes of determining compliance with the limits in this specification, an observed value or a

calculated value shall be rounded in accordance with the rounding method of Practice E 29:

Requirements	Rounded Unit for Observed or Calculated Value
Chemical composition and tolerances	Nearest unit in the last right-hand place of figures of the specified limit
Tensile strength and yield strength	Nearest 1,000 psi (7 MPa)
Elongation	Nearest 1%

13. Inspection

13.1 Inspection of the material shall be made as agreed upon by the manufacturer and the purchaser as part of the purchase contract.

14. Rejection and Rehearing

14.1 Material that fails to conform to the requirements of this specification may be rejected. Rejection should be reported to the producer or supplier promptly and in writing. In case of dissatisfaction with the results of the test, the producer or supplier may make claim for a rehearing.

15. Certification

15.1 A manufacturer's certification shall be furnished to the purchaser stating that material has been manufactured, tested, and inspected in accordance with this specification, and that the test results on representative samples meet specification requirements. A report of the test results shall be furnished.

16. Product Marking

16.1 Each piece of material ½ in. (12.7 mm) and over in diameter shall be marked with the specification number, alloy, heat number, manufacturer's identification, and size. The markings shall have no deleterious effect on the material or its performance and shall be sufficiently stable to withstand normal handling.

16.2 Each bundle or shipping container shall be marked with the name of the material; this specification number; alloy; the size; gross, tare and net weight; consignor and consignee address; contract or order number; and such other information as may be defined in the contract or order.

17. Keywords

17.1 N06022; N06059; N06200; N06210; N06455; N06686; N10276; rod

APPENDIX

(Nonmandatory Information)

X1. HEAT TREATMENT

X1.1 Proper heat treatment during or subsequent to fabrication is necessary for optimum performance, and the manufacturer shall be consulted for details.

SPECIFICATION FOR LOW-CARBON NICKEL-MOLYBDENUM-CHROMIUM, LOW-CARBON NICKEL-CHROMIUM-MOLYBDENUM, LOW-CARBON NICKEL-CHROMIUM-MOLYBDENUM-COPPER, LOW-CARBON-NICKEL-CHROMIUM-MOLYBDENUM-TANTALUM, AND LOW-CARBON NICKEL-CHROMIUM-MOLYBDENUM-TUNGSTEN ALLOY PLATE, SHEET, AND STRIP

SB-575

(Identical with ASTM Specification B 575-99a except that certification has been made mandatory.)

1. Scope

1.1 This specification covers plate, sheet, and strip of low-carbon nickel-molybdenum-chromium alloys (UNS N10276, N06022, and N06455), low-carbon nickel-chromium-molybdenum alloy (UNS N06058, UNS N06059), low-carbon nickel-chromium-molybdenum-copper alloy (UNS N06200), low-carbon nickel-chromium-molybdenum-tantalum alloy (UNS N06210), and low-carbon nickel-chromium-molybdenum-tungsten alloy (UNS N06686) as shown in Table 1, for use in general corrosive service.

1.2 The following products are covered under this specification:

1.2.1 *Sheet and Strip* — Hot or cold rolled, solution annealed, and descaled unless solution anneal is performed in an atmosphere yielding a bright finish.

1.2.2 *Plate* — Hot or cold rolled, solution annealed, and descaled.

1.3 The values stated in inch-pound units are to be regarded as the standard. The values given in parentheses are for information only.

2. Referenced Documents

2.1 *ASTM Standards:*

E 8 Test Methods for Tension Testing of Metallic Materials

E 18 Test Methods for Rockwell Hardness and Rockwell Superficial Hardness of Metallic Materials

E 29 Practice for Using Significant Digits in Test Data to Determine Conformance with Specifications

E 55 Practice for Sampling Wrought Nonferrous Metals and Alloys for Determination of Chemical Composition

E 112 Test Methods for Determining the Average Grain Size

E 140 Hardness Conversion Tables for Metals (Relationship Between Brinell Hardness, Vickers Hardness, Rockwell Hardness, Rockwell Superficial Hardness, and Knoop Hardness)

E 1473 Test Methods for Chemical Analysis of Nickel, Cobalt, and High-Temperature Alloys

3. Terminology

3.1 *Definitions of Terms Specific to This Standard:*

3.1.1 *cold-rolled plate* — material $^{3}/_{16}$ to $^{3}/_{8}$ in. (4.76 to 9.52 mm), inclusive, in thickness.

3.1.2 *hot-rolled plate* — material $^{3}/_{16}$ in. (4.76 mm) and over in thickness.

3.1.3 *plate* — material $^{3}/_{16}$ in. (4.76 mm) and over in thickness.

3.1.4 *sheet and strip* — material under $^{3}/_{16}$ in. (4.76 mm) in thickness.

4. Ordering Information

4.1 It is the responsibility of the purchaser to specify all requirements that are necessary for the safe and satisfactory performance of material ordered under this specification. Examples of such requirements include, but are not limited to, the following:

4.1.1 *Alloy* — Table 1,

4.1.2 *Dimensions* — Thickness (in decimals of an inch), width, and length (inch or fractions of an inch),

4.1.3 *Optional Requirement* — Plate; state how plate is to be cut (see 7.8.1 and Table 2),

4.1.4 *Certification* — Certification and a report of test results are required (Section 15),

4.1.5 *Purchase Inspection* — State which tests or inspections are to be witnessed (Section 13), and

4.1.6 *Samples for Product (Check) Analysis* — State whether samples shall be furnished (9.2.2).

5. Chemical Composition

5.1 The material shall conform to the composition limits specified in Table 1.

5.2 If a product (check) analysis is made by the purchaser, the material shall conform to the requirements specified in Table 1 subject to the permissible tolerances in Table 3.

6. Mechanical Properties and Other Requirements

6.1 *Tensile Properties* — The material shall conform to the room temperature tensile properties prescribed in Table 4.

6.2 *Hardness* — The hardness values given in Table 4 are informative only.

6.3 *Grain Size for Sheet and Strip* — Sheet and strip shall conform to the grain sizes as illustrated in Plate 1 of Test Methods E 112. The requirements shall be as indicated in Table 5.

7. Dimensions, Mass, and Permissible Variations

7.1 *Weight* — For calculations of mass or weight, the following densities shall be used:

	Density	
Alloy	lb/in.^{3}	g/cm^3
N10276	0.321	(8.87)
N06022	0.314	(8.69)
N06455	0.312	(8.64)
N06058	0.318	(8.80)
N06059	0.311	(8.60)
N06200	0.307	(8.50)
N06210	0.316	(8.76)
N06686	0.315	(8.73)

7.2 *Thickness:*

7.2.1 *Plate* — The permissible variations in thickness of plate shall be as prescribed in Table 6.

7.2.2 *Sheet and Strip* — The permissible variations in thickness of sheet and strip shall be as prescribed in Table 7. The thickness shall be measured with the micrometer spindle $^{3}/_{8}$ in. (9.525 mm) or more from any edge for material 1 in. (25.4 mm) or over in width and at any place on material under 1 in. (25.4 mm) in width.

7.3 *Width:*

7.3.1 *Plate* — The permissible variations in width of rectangular plates shall be as prescribed in Table 2.

7.3.2 *Sheet and Strip* — The permissible variations in width for sheet and strip shall be as prescribed in Table 8.

7.4 *Length:*

7.4.1 *Plate* — Permissible variations in the length of rectangular plate shall be as prescribed in Table 2.

7.4.2 *Sheet and Strip* — Sheet and strip may be ordered to cut lengths, in which case a variation of $^{1}/_{8}$ in. (3.175 mm) over the specified length shall be permitted, with a 0 minus tolerance.

7.5 *Straightness:*

7.5.1 The edgewise curvature (depth of chord) of flat sheet, strip, and plate shall not exceed 0.05 in. (1.27 mm) multiplied by the length in feet or 0.04 mm multiplied by the length in centimeters.

7.5.2 Straightness for coiled strip is subject to agreement between the manufacturer and the purchaser.

7.6 *Squareness* (Sheet) — For sheets of all thicknesses and widths of 6 in. (152.4 mm) or more, the angle between adjacent sides shall be 90 ± 0.15° ($^{1}/_{16}$ in. in 24 in. of 2.6 mm/m).

7.7 *Flatness* — Plate, sheet, and strip shall be commercially flat.

TABLE 1
CHEMICAL REQUIREMENTS

Element	Composition Limits, %							
	Alloy N10276	Alloy N06022	Alloy N06455	Alloy N06059	Alloy N06058	Alloy N06200	Alloy N06210	Alloy N06686
Molybdenum	15.0 to 17.0	12.5 to 14.5	14.0 to 17.0	15.0 to 16.5	19.0 to 21.0	15.0 to 17.0	18.0 to 20.0	15.0 to 17.0
Chromium	14.5 to 16.5	20.0 to 22.5	14.0 to 18.0	22.0 to 24.0	20.0 to 23.0	22.0 to 24.0	18.0 to 20.0	19.0 to 23.0
Iron	4.0 to 7.0	2.0 to 6.0	3.0 max	1.5 max	1.5 max	3.0 max	1.0 max	5.0 max
Tungsten	3.0 to 4.5	2.5 to 3.5	...	...	0.3 max	...	...	3.0 to 4.4
Cobalt, max	2.5	2.5	2.0	0.3	0.3	2.0 max	1.0	...
Carbon, max	0.010	0.015	0.015	0.010	0.010	0.010	0.015	0.010
Silicon, max	0.08	0.08	0.08	0.10	0.10	0.08	0.08	0.08
Manganese, max	1.0	0.50	1.0	0.5	0.5	0.50	0.5	0.75
Vanadium, max	0.35	0.35	...	...	...	...	0.35	...
Phosphorus, max	0.04	0.02	0.04	0.015	0.015	0.025	0.02	0.04
Sulfur, max	0.03	0.02	0.03	0.010	0.010	0.010	0.02	0.02
Titanium	...	...	0.7 max	...	...	...	...	0.02 to 0.25
Nickel	Remainder[A]	Remainder[A]	Remainder[A]	Bal	Bal	Remainder[A]	Reminder[A]	Remainder[A]
Aluminum	...	...	...	0.1 to 0.4	0.40 max	0.50 max	...	...
Copper	...	...	...	0.50 max	0.50 max	1.3 to 1.9	...	...
Tantalum	...	...	...	...	...	...	1.5 to 2.2	...

[A] See 9.2.2.

TABLE 2
PERMISSIBLE VARIATIONS IN WIDTH AND LENGTH OF SHEARED, TORCH-CUT, OR ABRASIVE-CUT RECTANGULAR PLATE

	Permissible Variations in Widths and Lengths for Dimensions Given, in. (mm)			
	Up to 30 (760), incl		Over 30 (760)	
Specified Thickness	+	−	+	−
	Inches			
Sheared:				
3/16 to 5/16, excl	3/16	1/8	1/4	1/8
5/16 to 1/2, incl	1/4	1/8	3/8	1/8
Abrasive-cut:				
3/16 to 1 1/2, incl	1/16	1/16	1/16	1/16
Over 1 1/2 to 2 1/2, incl	1/8	1/8	1/8	1/8
Torch-cut:[A]				
3/16 to 2 excl	1/2	0	1/2	0
2 to 3 incl	5/8	0	5/8	0
	Millimetres			
Sheared:				
4.76 to 7.94, excl	4.76	3.18	6.35	3.18
7.94 to 12.70, incl	6.35	3.18	9.52	3.18
Abrasive-cut:				
4.76 to 38.1, incl	1.59	1.59	1.59	1.59
Over 38.1 to 63.5, incl	3.18	3.18	3.18	3.18
Torch-cut:[A]				
4.8 to 50.8 excl	12.7	0	12.7	0
50.8 to 76.2 incl	15.9	0	15.9	0

[A] The tolerance spread shown for torch-cutting may be obtained all on the minus side, or divided between the plus and the minus side if so specified by the purchaser.

7.8 *Edges:*

7.8.1 Plates shall have sheared or cut (machined, abrasive cut, powder cut, or inert arc cut) edges, as specified.

7.8.2 Sheet and strip shall have sheared or slit edges.

8. Workmanship, Finish, and Appearance

8.1 The material shall be uniform in quality and condition, smooth and free of injurious imperfections.

9. Sampling

9.1 *Lots for Chemical Analysis and Mechanical Testing:*

9.1.1 A lot for chemical analysis shall consist of one heat.

9.1.2 A lot of plate, sheet, or strip for mechanical testing shall be defined as the material from one heat in the same condition and specified thickness.

9.2 *Sampling for Chemical Analysis:*

9.2.1 A representative sample shall be obtained from each heat during pouring or subsequent processing.

9.2.2 Product (check) analysis shall be wholly the responsibility of the purchaser.

9.3 *Sampling for Mechanical Testing:*

9.3.1 Representative samples shall be taken from each lot of finished material.

10. Number of Tests and Retests

10.1 *Chemical Analysis* — One test per heat.

10.2 *Tension Tests* — One test per lot.

10.3 *Grain Size* — One test per lot.

10.4 *Retests* — If one of the specimens used in the above tests of any lot fails to meet the specified requirements, two additional specimens shall be taken from different sample pieces and tested. The results of the tests

TABLE 3
PRODUCT (CHECK) ANALYSIS TOLERANCES

Element	Tolerances, Over Max or Under Min., Limit, %							
	Alloy N10276	Alloy N06022	Alloy N06455	Alloy N06059	Alloy N06058	Alloy N06200	Alloy N06210	Alloy N06686
Molybdenum	0.15	0.15	0.15	0.15	0.15	0.15	[A]	0.15
Chromium, under min	0.15	0.25	0.15	0.25	0.25	0.25	0.25	0.25
over max	0.25	0.25	0.25	0.25	0.25	0.25	0.25	0.25
Iron, under min	0.07	0.05	...	...	...	...	0.05	...
over max	0.10	0.10	0.07	0.05	0.05	0.10	0.05	0.07
Tungsten, under min	0.10	0.10	...	...	0.3 max	...	...	0.10
over max	0.15	0.15	...	...	...	...	...	0.15
Cobalt	0.05	0.05	0.05	0.03	0.03	0.05	[B]	...
Carbon	0.005	0.005	0.005	0.005	0.005	0.005	0.005	0.005
Silicon	0.02	0.02	0.02	0.02	0.02	0.02	0.02	0.02
Manganese	0.03	0.03	0.03	0.03	0.03	0.03	0.03	0.03
Vanadium	0.04	0.04	...	...	...	...	0.04	...
Phosphorus	0.005	0.005	0.005	0.005	0.005	0.005	0.005	0.005
Sulfur	0.005	0.003	0.005	0.003	0.003	0.003	0.003	0.003
Titanium	...	...	0.04	...	...	...	...	[C]
Aluminum	...	...	...	0.05	0.05	0.05	...	...
Copper	...	...	...	...	...	0.05	...	...
Tantalum	...	...	...	...	...	...	0.10	...

[A] Under min—0.15; over max—0.25.
[B] Over max—0.05.
[C] Under min—0.02; over max—0.03.

TABLE 4
MECHANICAL PROPERTY REQUIREMENTS

Alloy	Tensile Strength, Min., psi (MPa)	Yield Strength (0.2% Offset), Min., psi (MPa)	Elongation in 2 in. (50.8 mm) or $4D$[A] Min., %	Rockwell Hardness,[B] Max
N10276	100 000 (690)	41 000 (283)	40	100 HRB
N06022	100 000 (690)	45 000 (310)	45	100 HRB
N06455	100 000 (690)	40 000 (276)	40	100 HRB
N06058	110 000 (760)	52 000 (360)	40	100 HRB
N06059	100 000 (690)	45 000 (310)	45	100 HRB
N06200	100 000 (690)	41 000 (283)	45	100 HRB
N06686	100 000 (690)	45 000 (310)	45	100 HRB
N06210	100 000 (690)	45 000 (310)	45	100 HRB

[A] D refers to the diameter of the tension specimen.
[B] Hardness values are shown for information purposes only and are not to be used as a basis of acceptance or rejection. For approximate hardness conversions, see Hardness Conversion Tables E 140.

TABLE 5
GRAIN SIZE FOR ANNEALED SHEET

Thickness, in. (mm)	ASTM Micrograin Size Number	Average Grain Diameter,mm (in.)
0.125 (3.175) and under	3.0 or finer	0.127 (0.0050)
Over 0.125 (3.175)	1.5 or finer	0.214 (0.0084)

TABLE 6
PERMISSIBLE VARIATIONS IN THICKNESS OF PLATE[A]

Specified Thickness, in. (mm)	Permissible Variations in Thickness, in. (mm)[B,C] +	−
3/16 to 7/32 (4.762 to 5.556), incl	0.021 (0.53)	0.010 (0.25)
Over 7/32 to 1/4 (5.556 to 6.350), incl	0.024 (0.61)	0.010 (0.25)
Over 1/4 to 3/8 (6.350 to 9.525), incl	0.027 (0.69)	0.010 (0.25)
Over 3/8 to 1/2 (9.525 to 12.70), incl	0.030 (0.76)	0.010 (0.25)
Over 1/2 to 5/8 (12.70 to 5.88), incl	0.035 (0.89)	0.010 (0.25)
Over 5/8 to 3/4 (15.88 to 19.05), incl	0.040 (1.02)	0.010 (0.25)
Over 3/4 to 7/8 (19.05 to 22.25), incl	0.045 (1.14)	0.010 (0.25)
Over 7/8 to 1 (22.25 to 25.4), incl	0.050 (1.27)	0.010 (0.25)
Over 1 to 2 1/2 (25.4 to 63.5), incl	5[D]	0.010 (0.25)

[A] Applicable to plate 48 in. (1.22 m) and under in width.
[B] Measured 3/8 in. (9.525 mm) or more from any edge.
[C] Buffing or grinding for removal of light surface imperfections shall be permitted. The depth of such buffed or ground areas shall not exceed the minimum tolerance thickness.
[D] Expressed as percent of thickness.

on both of these specimens shall meet the specified requirements.

11. Specimen Preparation

11.1 Tension test specimens shall be taken from material in the final condition and tested transverse to the direction of rolling when width will permit.

11.2 Tension test specimens shall be any of the standard or subsize specimens shown in Test Methods E 8.

11.3 In the event of disagreement, referee specimens shall be as follows:

11.3.1 Full thickness of the material, machined to the form and dimensions shown for the sheet-type specimen in Test Methods E 8 for material under 1/2 in. (12.7 mm) in thickness.

11.3.2 The largest possible round specimen shown in Test Methods E 8 for material 1/2 in. (12.7 mm) and over.

12. Test Methods

12.1 The chemical composition and mechanical properties of the material as enumerated in this specification shall be determined, in case of disagreement, in accordance with the following ASTM standards:

12.1.1 *Chemical Analysis* — Test Methods E 1473. For elements not covered by Test Methods E 1473, the referee test method shall be as agreed upon between the manufacturer and the purchaser. The nickel composition shall be determined arithmetically by difference.

12.1.2 *Tension Test* — Test Methods E 8.

12.1.3 *Rockwell Hardness Test* — Test Methods E 18.

12.1.4 *Hardness Conversion* — Hardness Conversion Tables E 140.

12.1.5 *Grain Size* — Test Methods E 112.

12.1.6 *Determining Significant Places* — Practice E 29.

12.1.7 *Method of Sampling* — Practice E 55.

TABLE 7
PERMISSIBLE VARIATIONS IN THICKNESS OF SHEET[A] AND STRIP

Specified Thickness, in. (mm)	Permissible Variations in Thickness, in.[B,C] (mm) (All Widths) +	−
0.020 to 0.034 (0.51 to 0.86), incl	0.004 (0.10)	0.004 (0.10)
Over 0.034 to 0.056 (0.86 to 1.42), incl	0.005 (0.13)	0.005 (0.13)
Over 0.056 to 0.070 (1.42 to 1.78), incl	0.006 (0.15)	0.006 (0.15)
Over 0.070 to 0.078 (1.78 to 1.98), incl	0.007 (0.18)	0.007 (0.18)
Over 0.078 to 0.093 (1.98 to 2.36), incl	0.008 (0.20)	0.008 (0.20)
Over 0.093 to 0.109 (2.36 to 2.77), incl	0.009 (0.23)	0.009 (0.23)
Over 0.109 to 0.125 (2.77 to 3.18), incl	0.010 (0.25)	0.010 (0.25)
Over 0.125 to 0.140 (3.18 to 3.56), incl	0.013 (0.33)	0.010 (0.25)
Over 0.140 to 0.171 (3.56 to 4.34), incl	0.016 (0.41)	0.010 (0.25)
Over 0.171 to 0.187 (4.34 to 4.75), incl	0.018 (0.46)	0.010 (0.25)

[A] Applicable to sheet 48 in. (1.22 m) and under in width.
[B] Measured 3/8 in. (9.525 mm) or more from any edge.
[C] Buffing for removal of light surface imperfections shall be permitted. The depth of such buffed areas shall not exceed the permissible minus variation.

TABLE 8
PERMISSIBLE VARIATIONS IN WIDTH OF SHEET AND STRIP

Specified Thickness, in. (mm)	Specified Width, in. (mm)	Permissible Variations in Specified Width, in. (mm)	
		+	−
	Sheet		
0.187 (4.76) and under	2 (50.8) and over	0.125 (3.18)	0
	Strip (Slit Edges)		
Over 0.020 to 0.075 (0.51 to 1.90), incl	24 (610) and under	0.007 (0.18)	0.007 (0.18)
Over 0.075 to 0.100 (1.90 to 2.54), incl	24 (610) and under	0.009 (0.23)	0.009 (0.23)
Over 0.100 to 0.125 (2.54 to 3.18), incl	24 (610) and under	0.012 (0.30)	0.012 (0.30)

12.2 For purposes of determining compliance with the limits in this specification, an observed or calculated value shall be rounded in accordance with the rounding method of Practice E 29:

Requirements	Rounded Unit for Observed or Calculated Value
Chemical composition and tolerances	Nearest unit in the last right-hand place of figures of the specified limit
Tensile strength and yield strength	Nearest 1,000 psi (7 MPa)
Elongation	Nearest 1%

13. Inspection

13.1 Inspection of the material by the purchaser at the place of manufacture shall be made as agreed upon between the purchaser and the manufacturer as part of the purchase contract.

14. Rejection and Rehearing

14.1 Material that fails to conform to the requirements of this specification may be rejected. Rejection should be reported to the producer or supplier promptly and in writing. In case of dissatisfaction with the results of the test, the producer or supplier may make claim for a rehearing.

15. Certification

15.1 A manufacturer's certification shall be furnished to the purchaser stating that material has been manufactured, tested, and inspected in accordance with this specification, and that the test results on representative samples meet specification requirements. A report of the test results shall be furnished.

16. Product Marking

16.1 Each plate, sheet, or strip shall be marked on one face with the specification number, alloy, heat number, manufacturer's identification, and size. The markings shall have no deleterious effect on the material or its performance and shall be sufficiently stable to withstand normal handling.

16.2 Each bundle or shipping container shall be marked with the name of the material; this specification number; alloy; the size; gross, tare, and net weight; consignor and consignee address; contract or order number; and such other information as may be defined in the contract or order.

17. Keywords

17.1 N06022; N06058; N06059; N06200; N06455; N06686; N10276; plate; sheet; strip

APPENDIX

(Nonmandatory Information)

X1. HEAT TREATMENT

X1.1 Proper heat treatment during or subsequent to fabrication is necessary for optimum performance, and the manufacturer shall be consulted for details.

SPECIFICATION FOR NICKEL-CHROMIUM-IRON-MOLYBDENUM-COPPER ALLOY ROD

SB-581

(Identical with ASTM Specification B 581-97 except that certification has been made mandatory.)

1. Scope

1.1 This specification covers rod of Ni-Cr-Fe-Mo-Cu alloys (UNS N06007, N06975, N06985, N06030, and N08031) as shown in Table 1, for use in general corrosive service.

1.2 The following products are covered under this specification:

1.2.1 Rods $^{5}/_{16}$ to $^{3}/_{4}$ in. (7.94 to 19.05 mm) excl in diameter, hot- or cold-finished, solution annealed and pickled or mechanically descaled.

1.2.2 Rods $^{3}/_{4}$ to $3^{1}/_{2}$ in. (19.05 to 88.9 mm) incl in diameter, hot- or cold-finished, solution annealed, ground or turned.

1.3 The values stated in inch-pound units are to be regarded as the standard.

2. Referenced Documents

2.1 *ASTM Standards:*

E 8 Test Methods of Tension Testing of Metallic Materials

E 29 Practice for Using Significant Digits in Test Data to Determine Conformance with Specifications

E 55 Practice for Sampling Wrought Nonferrous Metals and Alloys for Determination of Chemical Composition

TABLE 1
CHEMICAL REQUIREMENTS

Element	Composition Limits, %				
	Alloy N08031	Alloy N06007	Alloy N06975	Alloy N06985	Alloy N06030
Nickel	30.0–32.0	remainder[A]	47.0–52.0	remainder[A]	remainder[A]
Chromium	26.0–28.0	21.0–23.5	23.0–26.0	21.0–23.5	28.0–31.5
Iron	remainder[A]	18.0–21.0	remainder[A]	18.0–21.0	13.0–17.0
Molybdenum	6.0–7.0	5.5–7.5	5.0–7.0	6.0–8.0	4.0–6.0
Copper	1.0–1.4	1.5–2.5	0.70–1.20	1.5–2.5	1.0–2.4
Manganese	2.0 max	1.0–2.0	1.0 max	1.0 max	1.5 max
Cobalt, max	...	2.5	...	5.0 max	5.0 max
Carbon, max	0.015	0.05	0.03	0.015 max	0.03 max
Tungsten	...	1.0 max	...	1.5 max	1.5–4.0
Silicon, max	0.3	1.0	1.0	1.0 max	0.8 max
Phosphorus, max	0.020	0.04	0.03	0.04 max	0.04 max
Sulfur, max	0.010	0.03	0.03	0.03 max	0.02 max
Columbium + tantalum	...	1.75–2.50	...	0.50 max	0.30–1.50
Titanium	...	...	0.7–1.5	...	...
Nitrogen	0.15–0.25	...	...	...	...

[A] See 13.1.1.

E 354 Test Methods for Chemical Analysis of High-Temperature, Electrical, Magnetic, and Other Similar Iron, Nickel, and Cobalt Alloys

3. Terminology

3.1 *Description of Term Specific to This Standard:*

3.1.1 *rod* — material of round solid section furnished in straight lengths.

4. Ordering Information

4.1 Orders for material under this specification shall include the following information:

4.1.1 *Alloy* — Table 1.

4.1.2 *Dimensions* — Nominal diameter and length. The shortest usable multiple length shall be specified (Table 4).

4.1.3 *Certification* — Certification and a report of test results are required (Section 16).

4.1.4 *Purchaser Inspection* — State which tests or inspections are to be witnessed (Section 14).

4.1.5 *Samples for Product (Check) Analysis* — State whether samples shall be furnished (10.2.2).

5. Chemical Composition

5.1 *Heat Analysis* — The material shall conform to the composition limits specified in Table 1.

5.2 *Product (Check) Analysis* — If a product (check) analysis is made by the purchaser, the material shall conform to the requirements specified in Table 1 subject to the permissible tolerances in Table 2.

6. Mechanical and Other Requirements

6.1 The material shall conform to the requirements of Table 3.

7. Straightness

7.1 The maximum curvature (depth of cord) shall not exceed 0.050 in. multiplied by the length in feet (0.04 mm multiplied by the length in centimeters).

8. Permissible Variations in Dimensions

8.1 *Diameter* — The permissible variations from the specified diameter and out-of-roundness shall be as prescribed in Table 4.

8.2 *Machining Allowances* — When the surfaces of finished material are to be machined, the following allowances are suggested for normal machining operations:

8.2.1 *As-Finished Rounds (Annealed and Descaled)* — For diameters of $^{5}/_{16}$ to $^{11}/_{16}$ in. (7.94 to 17.46 mm) incl, an allowance of $^{1}/_{16}$ in. (1.59 mm) on the diameter should be made for finish machining.

8.3 *Length* — The permissible variations in length of finished rods shall be as prescribed in Table 5. Unless otherwise specified, random mill lengths shall be furnished. Rods ordered to random or nominal lengths shall be furnished with either cropped or saw-cut ends; material ordered to cut lengths shall be furnished with square saw-cut or machined ends. Where rods are ordered in multiple lengths, a $^{1}/_{4}$-in. (6.35-mm) length addition shall be allowed for each uncut multiple length.

8.4 *Weight* — For calculation of mass or weight, the following densities shall be used:

	Density	
Alloy	lb/in.^{3}	(g/cm^3)
N06007	0.300	8.31
N06975	0.295	8.17
N06985	0.300	8.31
N06030	0.297	8.22
N08031	0.293	8.10

9. Workmanship, Finish, and Appearance

9.1 The material shall be uniform in quality and condition, smooth, commercially straight, and free of injurious imperfections.

10. Sampling

10.1 *Lots for Chemical Analysis and Mechanical Testing:*

10.1.1 A lot for chemical analysis shall consist of one heat.

10.1.2 A lot of rod for mechanical testing shall be defined as the material from one heat in the same condition and specified thickness.

10.2 *Sampling for Chemical Analysis:*

10.2.1 A representative sample shall be obtained from each lot during pouring or subsequent processing.

10.2.2 Product (check) analysis shall be wholly the responsibility of the purchaser.

10.3 *Sampling for Mechanical Testing:*

10.3.1 A representative sample shall be taken from each lot of finished material.

TABLE 2
PRODUCT (CHECK) ANALYSIS TOLERANCES

	Tolerances Over max or Under min, Limit, %				
	Alloy N08031	Alloy N06007	Alloy N06975	Alloy N06985	Alloy N06030
Nickel	0.30	...	0.35	...	...
Chromium	0.30	0.25	0.25 under min 0.30 over max	0.25	0.30
Iron	0.30	0.30	...	0.30	0.15 under min 0.30 over max
Molybdenum	0.15	0.15	0.10 under min 0.15 over max	0.15	0.10 under min 0.15 over max
Copper	0.04	0.04	0.04	0.04	0.04
Manganese	0.04	0.03 under min 0.04 over max	0.03	0.03	0.04
Cobalt	...	0.05	...	0.05	0.05
Carbon	0.005	0.01	0.005	0.005	0.01
Tungsten	...	0.04	...	0.10	0.10 under min 0.15 over max
Silicon	0.03	0.05	0.05	0.05	0.05
Phosphorus	0.005	0.005	0.005	0.005	0.005
Sulfur	0.003	0.005	0.005	0.005	0.003
Columbium + tantalum	...	0.10	...	0.05	0.05
Titanium	...	...	0.04 under min 0.05 over max	...	...
Nitrogen	...	0.01	...	...	...

TABLE 3
MECHANICAL PROPERTY REQUIREMENTS

Alloy	Specified Diameter, in. (mm)	Tensile Strength min, psi (MPa)	Yield Strength (0.2% Offset), min, psi (MPa)	Elongation in 2 in. or 50.8 mm or $4D^A$ min
N06007	5/16 to 3/4 (7.94 to 19.05), incl	90 000 (621)	35 000 (241)	35
	Over 3/4 to 3 1/2 (19.05 to 88.9), incl	85 000 (586)	30 000 (207)	30
N06975	5/16 to 3 1/2 (7.94 to 88.9), incl	85 000 (586)	32 000 (221)	40
N06985	5/16 to 3/4 (7.9 to 19.05), incl	90 000 (621)	35 000 (241)	45
	Over 3/4 to 3 1/2 (19.05 to 88.9), incl	85 000 (586)	30 000 (207)	35
N06030	...	85 000 (586)	35 000 (241)	30
N08031	All sizes	94 000 (648)	40 000 (276)	40

[A] D refers to the diameter of the tension specimen.

TABLE 4
PERMISSIBLE VARIATIONS IN DIAMETER AND OUT-OF-ROUNDNESS OF RODS

	Permissible Variations, in. (mm)		
	Diameter		
Specified Diameter, in. (mm)	+	−	Out-of-Roundness, max
Hot-Finished, Annealed, and Descaled Rods			
5/16 to 7/16 (7.94 to 11.11), incl	0.012 (0.305)	0.012 (0.305)	0.018 (0.457)
Over 7/16 to 5/8 (11.11 to 15.87), incl	0.014 (0.355)	0.014 (0.355)	0.020 (0.508)
Over 5/8 to 3/4 (15.87 to 19.05), excl	0.016 (0.406)	0.016 (0.406)	0.024 (0.610)
Hot-Finished, Annealed, and Ground or Turned Rods			
3/4 to 3 1/2 (19.05 to 88.9), incl	0.010 (0.254)	0	0.008 (0.203)

TABLE 5
PERMISSIBLE VARIATIONS IN LENGTH OF RODS

Random mill lengths	2 to 12 ft (61 to 366 cm) long with not more than 25 weight % under 4 ft (122 cm).
Multiple lengths	Furnished in multiples of a specified unit length, within the length limits indicated above. For each multiple, an allowance of $\frac{1}{4}$ in. (6.35 mm) will be made for cutting, unless otherwise specified. At the manufacturer's option, individual specified unit lengths may be furnished.
Nominal lengths	Specified nominal lengths having a range of not less than 2 ft (61 cm) with no short lengths allowed.
Cut lengths	A specified length to which all rods will be cut with a permissible variation of $+\frac{1}{8}$ in. (3.17 mm), −0.

11. Number of Tests and Retests

11.1 *Chemical Analysis* — One test per lot.

11.2 *Tension Tests* — One test per lot.

11.3 *Retests* — If the specimen used in the mechanical test of any lot fails to meet the specified requirements, two additional specimens shall be taken from different sample pieces and tested. The results of the tests on both of these specimens shall meet the specified requirements.

12. Specimen Preparation

12.1 Tension test specimens shall be taken from material after final heat treatment and tested in the direction of fabrication.

12.2 Tension test specimens shall be any of the standard or subsized specimens shown in Test Methods E 8.

12.3 In the event of disagreement, the referee specimen shall be the largest possible round specimen shown in Test Methods E 8.

13. Test Methods and Chemical Analysis

13.1 The chemical composition and mechanical properties of the material as enumerated in this specification shall be determined, in case of disagreement, in accordance with the following ASTM methods:

13.1.1 *Chemical Analysis* — Test Methods E 354. For elements not covered by Test Methods E 354, the referee method shall be as agreed upon between the manufacturer and purchaser. The composition of the remainder element shall be determined arithmetically by difference.

13.1.2 *Tension Test* — Test Methods E 8.

13.1.3 *Method of Sampling* — Practice E 55.

13.1.4 *Determining Significant Places* — Practice E 29.

13.2 For purposes of determining compliance with the limits in this specification, an observed value or a calculated value shall be rounded in accordance with the rounding method of Practice E 29:

Requirements	Rounded Unit for Observed or Calculated Value
Chemical composition and tolerances	nearest unit in the last right-hand place of figures of the specified limit
Tensile strength and yield strength	nearest 1000 psi (7 MPa)
Elongation	nearest 1%

14. Inspection

14.1 Inspection of the material shall be made as agreed upon by the manufacturer and the purchaser as part of the purchase contract.

15. Rejection and Rehearing

15.1 Material that fails to conform to the requirements of this specification may be rejected. Rejection should be reported to the producer or supplier promptly and in writing. In case of dissatisfaction with the results of the test, the producer or supplier may make claim for a rehearing.

16. Certification

16.1 A manufacturer's certification shall be furnished to the purchaser stating that material has been manufactured, tested, and inspected in accordance with this specification, and that the test results on representative samples meet specification requirements. A report of the test results shall be furnished.

17. Product Marking

17.1 Each piece of material $\frac{1}{2}$ in. (12.7 mm) and over in diameter shall be marked with this specification

number, name of the material, and size of the product.

17.2 Each bundle or shipping container shall be marked with the name of the material; this specification number; alloy; the size; gross, tare and net weight; consignor and consignee address; contract or other number; or such other information as may be defined in the contract or order.

APPENDIX

(Nonmandatory Information)

X1. HEAT TREATMENT

X1.1 Proper heat treatment during or subsequent to fabrication is necessary for optimum performance and the manufacturer shall be consulted for details.

SPECIFICATION FOR NICKEL-CHROMIUM-IRON-MOLYBDENUM-COPPER ALLOY PLATE, SHEET, AND STRIP

SB-582

(Identical with ASTM Specification B 582-92.)

1. Scope

1.1 The specification covers plate, sheet, and strip of nickel-chromium-iron-molybdenum-copper alloys (UNS N06007, N06975, N06985, and N06030) as shown in Table 1, for use in general corrosive service.

1.2 The following products are covered under this specification:

1.2.1 *Sheet and Strip* — Hot or cold rolled, solution annealed, and descaled unless solution anneal is performed in an atmosphere yielding a bright finish.

1.2.2 *Plate* — Hot or cold rolled, solution annealed, and descaled.

1.3 The values stated in inch-pound units are to be regarded as the standard. The values given in parentheses are for information only.

2. Referenced Documents

2.1 *ASTM Standards:*

E 8 Test Methods of Tension Testing of Metallic Materials

E 18 Test Methods for Rockwell Hardness and Rockwell Superficial Hardness of Metallic Materials

E 29 Practice for Using Significant Digits in Test Data to Determine Conformance with Specifications

TABLE 1
CHEMICAL REQUIREMENTS

Element	Composition Limits, %			
	Alloy N06007	Alloy N06975	Alloy N06985	Alloy N06030
Nickel	remainder[A]	47.0 to 52.0	remainder[A]	remainder[A]
Chromium	21.0 to 23.5	23.0 to 26.0	21.0 to 23.5	28.0 to 31.5
Iron	18.0 to 21.0	remainder[A]	18.0 to 21.0	13.0 to 17.0
Molybdenum	5.5 to 7.5	5.0 to 7.0	6.0 to 8.0	4.0 to 6.0
Copper	1.5 to 2.5	0.70 to 1.20	1.5 to 2.5	1.0 to 2.4
Manganese	1.0 to 2.0	1.0 max	1.0 max	1.5 max
Cobalt, max	2.5	...	5.0	5.0
Carbon, max	0.05	0.03	0.015	0.03
Tungsten	1.0 max	...	1.5 max	1.5 to 4.0
Silicon, max	1.0	1.0	1.0	0.8
Phosphorus, max	0.04	0.03	0.04	0.04
Sulfur, max	0.03	0.03	0.03	0.02
Columbium + tantalum	1.75 to 2.50	...	0.50 max	0.30 to 1.50
Titanium	...	0.70–1.50	...	...

[A] See 13.1.1.

E 55 Practice for Sampling Wrought Nonferrous Metals and Alloys for Determination of Chemical Composition
E 140 Hardness Conversion Tables for Metals (Relationship Between Brinell Hardness, Vickers Hardness, Rockwell Hardness, Rockwell Superficial Hardness, and Knoop Hardness)
E 354 Test Methods for Chemical Analysis of High-Temperature, Electrical, Magnetic, and Other Similar Iron, Nickel, and Cobalt Alloys

3. Terminology

3.1 *Descriptions of Terms Specific to This Standard:*

3.1.1 *cold-rolled plate* — material $^{3}/_{16}$ to $^{3}/_{8}$ in. (4.76 to 9.52 mm), inclusive, in thickness.

3.1.2 *hot-rolled plate* — material $^{3}/_{16}$ in. (4.76 mm) and over in thickness.

3.1.3 *plate* — material $^{3}/_{16}$ in. (4.76 mm) and over in thickness.

3.1.4 *sheet and strip* — material under $^{3}/_{16}$ in. (4.76 mm) in thickness.

4. Ordering Information

4.1 Orders for material under this specification shall include the following information:

4.1.1 *Alloy* — Table 1,

4.1.2 *Dimensions* — Thickness (in decimals of an inch), width, and length (inch or fractions of an inch),

4.1.3 *Optional Requirement, Plate* — How the plate is to be cut (see 7.1 and Table 6),

4.1.4 *Certification* — State if certification or a report of test results is required (Section 16),

4.1.5 *Purchaser Inspection* — State which tests or inspections are to be witnessed (Section 14), and

4.1.6 *Samples for Product (Check) Analysis* — State whether samples shall be furnished (Section 5).

5. Chemical Composition

5.1 *Heat Analysis* — The material shall conform to the composition limits specified in Table 1.

5.2 *Product (Check) Analysis* — If a product (check) analysis is made by the purchaser, the material shall conform to the requirements specified in Table 1 subject to the permissible tolerances in Table 2.

6. Mechanical Properties and Other Requirements

6.1 *Tensile Properties* — The material shall conform to the mechanical property requirements prescribed in Table 3.

6.2 *Hardness* — The hardness values given in Table 3 are informative only.

7. Edges

7.1 Plates shall have sheared or cut machined, abrasive cut, powder cut, or inert arc cut edges, as specified.

7.2 Sheet and strip shall have sheared or slit edges.

8. Permissible Variations in Dimensions

8.1 *Weight* — For calculation of mass or weight, the following densities shall be used:

Alloy	Density lb/in.^{3}	Density g/cm^3
N06007	0.300	8.31
N06975	0.295	8.17
N06985	0.300	8.31
N06030	0.297	8.22

8.2 *Thicknesses:*

8.2.1 *Plate* — The permissible variations in thickness of plate shall be as prescribed in Table 4.

8.2.2 *Sheet and Strip* — The permissible variations in thickness of sheet and strip shall be as prescribed in Table 5. The thickness shall be measured with the micrometer spindle $^{3}/_{8}$ in. (9.52 mm) or more from any edge for material 1 in. (25.4 mm) or over in width and at any place on material under 1 in. (25.4 mm) in width.

8.3 *Width:*

8.3.1 *Plate* — The permissible variations in width of rectangular plates shall be as prescribed in Table 6.

8.3.2 *Sheet and Strip* — The permissible variations in width for sheet and strip shall be as prescribed in Table 7.

8.4 *Length:*

8.4.1 *Plate* — Permissible variations in the length of rectangular plate shall be as prescribed in Table 6.

8.4.2 *Sheet and Strip* — Sheet and strip may be ordered to cut lengths, in which case a variation of $^{1}/_{8}$ in. (3.18 mm) over the specified length shall be permitted, with a 0 minus tolerance.

8.5 *Straightness* — The edgewise curvature (depth of cord) of sheet, strip, and plate shall not exceed 0.05 in./ft (4.2 mm/m).

TABLE 2
PRODUCT (CHECK) ANALYSIS TOLERANCES

	Tolerances Over max or Under min, Limit, %			
	Alloy N06007	Alloy N06975	Alloy N06985	Alloy N06030
Nickel	...	0.35	...	...
Chromium	0.25	0.25 under min 0.30 over max	0.25	0.30
Iron	0.30	...	0.30	0.15 under min 0.30 over max
Molybdenum	0.15	0.10 under min 0.15 over max	0.15	0.10 under min 0.15 over max
Copper	0.04	0.04	0.04	0.04
Manganese	0.03 under min 0.04 over max	0.03	0.03	0.04
Cobalt	0.05	...	0.05	0.05
Carbon	0.01	0.005	0.005	0.01
Tungsten	0.04	...	0.10	0.10 under min 0.15 over max
Silicon	0.05	0.05	0.05	0.05
Phosphorus	0.005	0.005	0.005	0.005
Sulfur	0.005	0.005	0.005	0.003
Columbium + tantalum	0.10	...	0.05	0.05
Titanium	...	0.04 under min 0.05 over max	...	...

8.6 *Squareness (Sheet)* — For sheets of all thickness and widths of 6 in. (152.4 mm) or more, the angle between adjacent sides shall be 90 ± 0.15° ($^1/_{16}$ in. in 24 in. or 2.6 mm/m).

8.7 *Flatness* — Plate, sheet, and strip shall be commercially flat.

9. Workmanship, Finish, and Appearance

9.1 The material shall be uniform in quality and condition, smooth, and free of injurious imperfections.

10. Sampling

10.1 *Lots for Chemical Analysis and Mechanical Testing:*

10.1.1 A lot for chemical analysis shall consist of one heat.

10.1.2 A lot of plate, sheet, or strip for mechanical testing shall be defined as the material from one heat in the same condition and specified thickness.

10.2 *Sampling for Chemical Analysis:*

10.2.1 A representative sample shall be obtained from each lot during pouring or subsequent processing.

10.2.2 Product (check) analysis shall be wholly the responsibility of the purchaser.

10.3 *Sampling for Mechanical Testing:*

10.3.1 Representative samples shall be taken from each lot of finished material.

11. Number of Tests and Retests

11.1 *Chemical Analysis* — One test per lot.

11.2 *Tension Tests* — One test per lot.

11.3 *Hardness Tests* — One test per lot.

11.4 *Retests* — If one of the specimens used in the above tests of any lot fails to meet the specified requirements, two additional specimens shall be taken from different sample pieces and tested. The results of the tests on both of these specimens shall meet the specified requirements.

12. Specimen Preparation

12.1 Tension test specimens shall be taken from material in the final condition and tested transverse to the direction of rolling when width will permit.

12.2 Tension test specimens shall be any of the standard or subsize specimens shown in Test Methods E 8.

12.3 In the event of disagreement, referee specimens shall be as follows:

TABLE 3
MECHANICAL PROPERTY REQUIREMENTS

Alloy	Thickness, in. (mm)	Tensile Strength min, psi (MPa)	Yield Strength (0.2 % Offset), min, psi (MPa)	Elongation in 2 in. or 50.8 mm or $4D^A$ min	Rockwell Hardness,[B] max
		Annealed Plate			
N06007	3/16 to 3/4 (4.76 to 19.05), incl	90 000 (621)	35 000 (241)	35	100 HRB
	Over 3/4 to 2 1/2 (19.05 to 63.5), incl	85 000 (586)	30 000 (207)	30	100 HRB
N06975	3/16 to 2 1/2 (4.76 to 63.5), incl	85 000 (586)	32 000 (221)	40	100 HRB
N06985	3/16 to 3/4 (4.76 to 19.05), incl	90 000 (621)	35 000 (241)	45	100 HRB
	Over 3/4 to 2 1/2 (19.05 to 63.5), incl	85 000 (586)	30 000 (207)	35	100 HRB
N06030	...	85 000 (586)	35 000 (241)	30	...
		Annealed Sheet			
N06985	Over 0.020 (0.51)	90 000 (621)	35 000 (241)	45	100 HRB
		Annealed Sheet and Strip			
N06007	Over 0.020 (0.51)	90 000 (621)	35 000 (241)	40	100 HRB
N06975	Over 0.020 (0.51)	85 000 (586)	32 000 (221)	40	100 HRB
N06030	Over 0.020 (0.51)	85 000 (586)	35 000 (241)	30	...

[A] D refers to the diameter of the tension specimen.

[B] Hardness values are shown for information purposes only and are not to be used as a basis for rejection or acceptance. For approximate hardness conversions, see Hardness Conversion Tables E 140.

TABLE 4
PERMISSIBLE VARIATIONS IN THICKNESS OF PLATE[A]

Specified Thickness, in. (mm)	Permissible Variations in Thickness, in. (mm)[B,C] +	−
3/16 to 7/32 (4.76 to 5.56), incl	0.021 (0.53)	0.010 (0.25)
Over 7/32 to 1/4 (5.56 to 6.35), incl	0.024 (0.61)	0.010 (0.25)
Over 1/4 to 3/8 (6.35 to 9.52), incl	0.027 (0.69)	0.010 (0.25)
Over 3/8 to 1/2 (9.52 to 12.70), incl	0.030 (0.76)	0.010 (0.25)
Over 1/2 to 5/8 (12.70 to 15.88), incl	0.035 (0.89)	0.010 (0.25)
Over 5/8 to 3/4 (15.88 to 19.05), incl	0.040 (1.02)	0.010 (0.25)
Over 3/4 to 7/8 (19.05 to 22.25), incl	0.045 (1.14)	0.010 (0.25)
Over 7/8 to 1 (22.25 to 25.4), incl	0.050 (1.27)	0.010 (0.25)
Over 1 to 2 1/2 (25.4 to 63.5), incl	5[D]	0.010 (0.25)

[A] Applicable to plate 48 in. (1.22 m) and under in width.
[B] Measured 3/8 in. (9.52 mm) or more from any edge.
[C] Buffing or grinding for removal of light surface imperfections shall be permitted. The depth of such buffed or ground areas shall not exceed the minimum tolerance thickness.
[D] Expressed as percent of thickness

TABLE 5
PERMISSIBLE VARIATIONS IN THICKNESS OF SHEET[A] AND STRIP

Specified Thickness, in. (mm)	Permissible Variations in Thickness, in.[B,C] (mm) (All Widths) +	−
0.020 to 0.034 (0.51 to 0.86), incl	0.004 (0.10)	0.004 (0.10)
Over 0.034 to 0.056 (0.86 to 1.42), incl	0.005 (0.13)	0.005 (0.13)
Over 0.056 to 0.070 (1.42 to 1.78), incl	0.006 (0.15)	0.006 (0.15)
Over 0.070 to 0.078 (1.78 to 1.98), incl	0.007 (0.18)	0.007 (0.18)
Over 0.078 to 0.093 (1.98 to 2.36), incl	0.008 (0.20)	0.008 (0.20)
Over 0.093 to 0.109 (2.36 to 2.77), incl	0.009 (0.23)	0.009 (0.23)
Over 0.109 to 0.125 (2.77 to 3.18), incl	0.010 (0.25)	0.010 (0.25)
Over 0.125 to 0.140 (3.18 to 3.56), incl	0.013 (0.33)	0.010 (0.25)
Over 0.140 to 0.171 (3.56 to 4.34), incl	0.016 (0.41)	0.010 (0.25)
Over 0.171 to 0.187 (4.34 to 4.75), incl	0.018 (0.46)	0.010 (0.25)

[A] Applicable to sheet 48 in. (1.22 m) and under in width.
[B] Measured 3/8 in. (9.52 mm) or more from any edge.
[C] Buffing for removal of light surface imperfections shall be permitted. The depth of such buffed areas shall not exceed the permissible minus variation.

12.3.1 Full thickness of the material, machined to the form and dimensions shown for the sheet-type specimen in Test Methods E 8 for material under 1/2 in. (12.7 mm) in thickness.

12.3.2 The largest possible round specimen shown in Test Methods E 8 for material 1/2 in. (12.7 mm) and over.

13. Test Methods and Chemical Analysis

13.1 The chemical composition and mechanical properties of the material as enumerated in this specification shall be determined, in case of disagreement, in accordance with the following ASTM standards:

13.1.1 *Chemical Analysis* — Test Methods E 354. For elements not covered by Test Methods E 354, the referee test method shall be as agreed upon between the manufacturer and the purchaser. The composition of the remainder element shall be determined arithmetically by difference.

13.1.2 *Tension Test* — Test Methods E 8.

13.1.3 *Rockwell Hardness Test* — Test Methods E 18.

TABLE 6
PERMISSIBLE VARIATIONS IN WIDTH AND LENGTH OF SHEARED, TORCH-CUT, OR ABRASIVE-CUT RECTANGULAR PLATE

Specified Thickness	Permissible Variations in Widths and Lengths for Dimensions Given, in. (mm)			
	Up to 30 (760), incl		Over 30 (760), incl	
	+	−	+	−
Inches				
Sheared:				
3/16 to 5/16, incl	3/16	1/8	1/4	1/8
Over 5/16 to 1/2, incl	1/4	1/8	3/8	1/8
Abrasive-cut:				
3/16 to 1 1/2, incl	1/16	1/16	1/16	1/16
Over 1 1/2 to 2 1/2, incl	1/8	1/8	1/8	1/8
Torch-cut:[A]				
3/16 to 2, excl	1/2	0	1/2	0
2 to 3, incl	5/8	0	5/8	0
Millimetres				
Sheared:				
4.76 to 7.94, incl	4.76	3.18	6.35	3.18
Over 7.94 to 12.70, incl	6.35	3.18	9.52	3.18
Abrasive-cut:				
4.76 to 38.1, incl	1.59	1.59	1.59	1.59
Over 38.1 to 63.5, incl	3.18	3.18	3.18	3.18
Torch-cut:[A]				
4.8 to 50.8, excl	12.7	0	12.7	0
50.8 to 76.2, incl	15.9	0	15.9	0

[A] The tolerance spread shown for torch-cutting may be obtained all on the minus side, or divided between the plus and the minus side, if so specified by the purchaser.

TABLE 7
PERMISSIBLE VARIATIONS IN WIDTH OF SHEET AND STRIP

Specified Thickness, in. (mm)	Specified Width, in. (mm)	Permissible Variations in Specified Width, in. (mm)	
		+	−
Sheet			
0.187 (4.76) and under	2 (50.8) and over	0.125 (3.18)	0
Strip (Slit Edges)			
Over 0.020 to 0.075 (0.51 to 1.90), incl	24 (610) and under	0.007 (0.18)	0.007 (0.18)
Over 0.075 to 0.100 (1.90 to 2.54), incl	24 (610) and under	0.009 (0.23)	0.009 (0.23)
Over 0.100 to 0.125 (2.54 to 3.18), incl	24 (610) and under	0.012 (0.30)	0.012 (0.30)

13.1.4 *Hardness Conversion* — Hardness Conversion Tables E 140.

13.1.5 *Determining Significant Places* — Practice E 29.

13.1.6 *Method of Sampling* — Practice E 55.

13.2 For purposes of determining compliance with the specified limits for requirements of the properties listed in the following table, an observed or calculated value shall be rounded in accordance with the rounding method of Practice E 29.

Requirements	Rounded unit for observed or calculated value
Chemical composition and tolerances	nearest unit in the last right-hand place of figures of the specified limit
Tensile strength and yield strength	nearest 1000 psi (7 MPa)
Elongation	nearest 1%

14. Inspection

14.1 Inspection of the material shall be made as agreed upon between the manufacturer and the purchaser as part of the purchase contract.

15. Rejection and Rehearing

15.1 Material that fails to conform to the requirements of this specification may be rejected. Rejection should be reported to the producer or supplier promptly and in writing. In case of dissatisfaction with the results of the test, the producer or supplier may make claim for a rehearing.

16. Certification

16.1 When specified in the purchase order or contract, a manufacturer's certification shall be furnished to the purchaser stating that material has been manufactured, tested, and inspected in accordance with this specification, and that the test results on representative samples meet specification requirements. When specified in the purchase order or contract, a report of the test results shall be furnished.

17. Product Marking and Package Marking

17.1 Each plate, sheet, or strip shall be marked on one face with the specification number, heat number, manufacturer's identification, and size. The markings shall have no deleterious effect on the material or its performance and shall be sufficiently stable to withstand normal handling.

17.2 Each bundle or shipping container shall be marked with the name of the material; this specification number; alloy; the size; gross, tare, and net weight; consignor and consignee address; contract or order number; and such other information as may be defined in the contract or order.

APPENDIX

(Nonmandatory Information)

X1. HEAT TREATMENT

X1.1 Proper heat treatment during or subsequent to fabrication is necessary for optimum performance, and the manufacturer shall be consulted for details.

SPECIFICATION FOR COPPER ALLOY SAND CASTINGS FOR GENERAL APPLICATIONS

SB-584

(Identical with ASTM Specification B 584-00 for the alloys and tempers covered. Certification has been made mandatory, and welding/casting repair requirements have been added for alloys C84400 and C90300.)

1. Scope

1.1 This specification covers requirements for copper alloy sand castings for general applications. Nominal compositions of the alloys defined by this specification are shown in Table 1. This is a composite specification replacing former documents as shown in Table 1.

NOTE 1 — Other copper alloy castings are included in the following ASTM specifications: B 22, B 61, B 62, B 66, B 67, B 148, B 176, B 271, B 369, B 427, B 492, B 505, B 763, B 770, and B 806.

1.2 Component part castings produced to this specification may be manufactured in advance and supplied from stock. In such cases the manufacturer shall maintain a general quality certification of all castings without specific record or date of casting for a specific casting.

1.3 The values stated in inch-pound units are to be regarded as the standard. The values given in parentheses are provided for information purposes only.

2. Referenced Documents

2.1 *ASTM Standards:*

B 22 Specification for Bronze Castings for Bridges and Turntables
B 61 Specification for Steam or Valve Bronze Castings
B 62 Specification for Composition Bronze or Ounce Metal Castings
B 66 Specification for Bronze Castings for Steam Locomotive Wearing Parts
B 67 Specification for Car and Tender Journal Bearings, Lined
B 148 Specification for Aluminum-Bronze Sand Castings
B 176 Specification for Copper-Alloy Die Castings
B 208 Practice for Preparing Tension Test Specimens for Copper Alloy Sand, Permanent Mold, Centrifugal, and Continuous Castings
B 271 Specification for Copper-Base Alloy Centrifugal Castings
B 369 Specification for Copper-Nickel Alloy Castings
B 427 Specification for Gear Bronze Alloy Castings
B 492 Specification for Cast Copper-Nickel Ship Tailshaft Sleeves
B 505 Specification for Copper-Base Alloy Continuous Castings
B 763 Specification for Copper Alloy Sand Castings for Valve Application
B 770 Specification for Copper-Beryllium Alloy Sand Castings for General Applications
B 806 Specification for Copper Alloy Permanent Mold Castings for General Applications
B 824 Specification for General Requirements for Copper Alloy Castings
B 846 Terminology for Copper and Copper Alloys
E 527 Practice for Numbering Metals and Alloys (UNS)

2.2 *ASME Specifications:*

SB-61 Specification for Steam Valve Bronze Castings
SB-62 Specification for Composition Valve Bronze or Ounce Metal Castings
SB-148 Specification for Aluminum Bronze Sand Castings
SB-271 Specification for Copper-Base Alloy Centrifugal Castings
SB-369 Specification for Copper-Nickel Alloy Castings
SB-505 Specification for Copper-Base Alloy Continuous Castings
SB-824 Specification for General Requirements for Copper Alloy Castings

3. Terminology

3.1 Definitions of terms relating to copper alloys can be found in Terminology B 846.

TABLE 1
NOMINAL COMPOSITIONS

Classification	Copper Alloy UNS No.	Previous Designation	Commercial Designation	Copper	Tin	Lead	Zinc	Nickel	Iron	Aluminum	Manganese	Silicon	Niobium	Bismuth
Leaded red brass	C83450	...	...	88	2½	2	6½	1	...	...	...	...	...	...
	C83600	B 145-4A	85-5-5-5 or No. 1 composition	85	5	5	5	...	...	...	...	...	...	...
	C83800	B 145-4B	commercial red brass, 83-4-6-7	83	4	6	7	...	...	...	...	...	...	
Leaded semi-red brass	C84400	B 145-5A	valve composition, 81-3-7-9	81	3	7	9	...	...	...	...	...	...	...
	C84800	B 145-5B	semi-red brass, 76-2½-6½-15	76	2½	6½	15	...	...	...	...	...	...	...
Leaded yellow brass	C85200	B 146-6A	high-copper yellow brass	72	1	3	24	...	...	...	...	...	...	...
	C85400	B 146-6B	commercial No. 1 yellow brass	67	1	3	29	...	...	...	...	...	...	...
	C85700	B 146-6C	leaded naval brass	61	1	1	37	...	...	...	...	...	...	...
High-strength yellow brass	C86200	B 147-8B	high-strength manganese bronze	63	...	...	27	...	3	4	3	...	...	...
	C86300	B 147-8C	high-strength manganese bronze	61	...	...	27	...	3	6	3	...	...	...
	C86400	B 147-7A	leaded manganese bronze	58	1	1	38	...	1	½	½	...	...	...
	C86400	B 132-A												
	C86500	B 147-8A	No. 1 manganese bronze	58	...	...	39	...	1	1	1	...	...	...
	C86700	B 132-B	leaded manganese bronze	58	1	1	34	...	2	2	2	...	...	...
Silicon bronze + silicon brass	C87300	B 198-12A	silicon bronze	95	...	...	...	...	...	...	1	4	...	...
	C87400	B 198-13A	silicon brass	82	...	½	14	...	...	...	...	3½	...	...
	C87500	B 198-13B	silicon brass	82	...	...	14	...	...	...	...	4	...	...
	C87600	B 198-13C	silicon bronze	91	...	...	5	...	...	...	...	4	...	...
	C87610	B 198-12A	silicon bronze	92	...	...	4	...	...	...	...	4	...	...
Bismuth selenium brass	C89510[A]	...	sebiloy I	87	5	...	5	...	...	...	...	...	...	1.0
	C89520[B]	...	sebiloy II	86	5½	...	5	...	...	...	...	...	...	1.9
Bismuth semi-red brass	C89844	...	bismuth brass	84½	4	...	8	...	...	...	...	...	...	3
Tin bronze + leaded tin bronze	C90300	B 143-1B	modified "G" bronze, 88-8-0-4	88	8	...	4	...	...	...	...	...	...	...
	C90500	B 143-1A	"G" bronze, 88-10-0-2	88	10	...	2	...	...	...	...	...	...	...
	C92200	B 143-2A	steam or valve bronze-Navy "M"	88	6	1½	4½	...	...	...	...	...	...	...
	C92210	...	...	88	5	2	4	1	...	...	...	...	...	...
	C92300	B 143-2B	87-5-1-4, Navy PC	87	8	1	4	...	...	...	...	...	...	...
	C92600	...	87-10-1-2	87	10	1	2	...	...	...	...	...	...	...
High-lead tin bronze	C93200	B 144-3B	83-7-7-3	83	7	7	3	...	...	...	...	...	...	...
	C93500	B 144-3C	85-5-9-1	85	5	9	1	...	...	...	...	...	...	...
	C93700	B 144-3A	80-10-10	80	10	10	...	...	...	...	...	...	...	...
	C93800	B 144-3D	78-7-15	78	7	15	...	...	...	...	...	...	...	...
	C94300	B 144-3E	71-5-24	71	5	24	...	...	...	...	...	...	...	...

(continued)

TABLE 1
NOMINAL COMPOSITIONS (CONT'D)

Classification	Copper Alloy UNS No.	Previous Designation	Commercial Designation	Copper	Tin	Lead	Zinc	Nickel	Iron	Aluminum	Manganese	Silicon	Niobium	Bismuth
Nickel-tin bronze + leaded nickel-tin bronze	C94700	B 292-A	nickel-tin bronze Grade "A"	88	5	...	2	5	...	...	...	...	...	...
	C94800	B 292-B	leaded nickel-tin bronze Grade "B"	87	5	1	2	5	...	...	...	...	...	...
	C94900	...	leaded nickel-tin bronze Grade "C"	80	5	5	5	5	...	...	...	...	...	...
Spinodal alloy	C96800	...	...	82	8	...	...	10	...	...	...	...	0.2	...
Leaded nickel bronze	C97300	B 149-10A	12% leaded nickel silver	57	2	9	20	12	...	...	...	...	...	...
	C97600	B 149-11A	20% leaded nickel silver	64	4	4	8	20	...	...	...	...	...	...
	C97800	B 149-11B	25% leaded nickel silver	66	5	2	2	25	...	...	...	...	...	...

[A] Selenium 0.5.
[B] Selenium 0.9.

4. General Requirements

4.1 The following sections of Specification B 824 form a part of this specification. In the event of a conflict between this specification and Specification B 824, the requirements of this specification shall take precedence.

4.1.1 Terminology,

4.1.2 Other Requirements,

4.1.3 Dimensions, Mass, and Permissible Variations,

4.1.4 Workmanship, Finish, and Appearance,

4.1.5 Sampling,

4.1.6 Number of Tests and Retests,

4.1.7 Specimen Preparation,

4.1.8 Test Methods,

4.1.9 Significance of Numerical Limits,

4.1.10 Inspection,

4.1.11 Rejection and Rehearing,

4.1.12 Certification,

4.1.13 Test Report,

4.1.14 Product Marking,

4.1.15 Packaging and Package Marking, and

4.1.16 Supplementary Requirements.

5. Ordering Information

5.1 Orders for castings under this specification should include the following information:

5.1.1 Specification title, number, and year of issue,

5.1.2 Quantity of castings,

5.1.3 Copper alloy UNS Number (Table 1) and temper (as-cast, heat treated, and so forth),

5.1.4 Pattern or drawing number, and condition (as-cast, machined, etc.),

5.1.5 ASME Boiler and Pressure Vessel Code—compliance (Section 10),

5.1.6 When material is purchased for agencies of the U.S. Government, the Supplementary Requirements of Specification B 824 may be specified.

5.2 The following options are available and should be specified in the purchase order when required:

5.2.1 Chemical analysis of residual elements (7.3),

5.2.2 Pressure test or soundness requirements (Specification B 824),

5.2.3 Approval of weld repair or impregnation, or both (Section 9),

5.2.4 Certification (Specification B 824),

5.2.5 Foundry test report (Specification B 824),

5.2.6 Witness inspection (Specification B 824), and

5.2.7 Product marking (Specification B 824).

6. Manufacture

6.1 Copper alloy UNS Nos. C94700 and C96800 may be supplied in the heat treated condition to obtain the higher mechanical properties shown in Table 2. Suggested heat treatments for these alloys are given in Table 3. Actual practice may vary by manufacturer.

6.2 Separately cast test bar coupons representing castings made in copper alloy UNS Nos. C94700HT and C96800HT shall be heat treated with the castings.

7. Chemical Composition

7.1 The castings shall conform to the compositional requirements for named elements as shown in Table 4 for the copper alloy UNS numbers specified in the purchase order.

7.2 These specification limits do not preclude the presence of other elements. Limits may be established and analysis required for unnamed elements agreed upon between manufacturer or supplier and purchaser. Copper or zinc, when zinc is 20% or greater, may be given as remainder and may be taken as the difference between the sum of all elements analyzed and 100%. When all named elements in Table 4 are analyzed, their sum shall be as specified in Table 5.

7.3 It is recognized that residual elements may be present in cast copper alloys. Analysis shall be made for residual elements only when specified in the purchase order.

8. Mechanical Properties

8.1 Mechanical properties shall be determined from separately cast test bar castings, and shall meet the requirements shown in Table 2.

9. Casting Repair

9.1 The castings shall not be weld repaired without approval of the purchaser (5.2.3).

9.2 The castings shall not be impregnated without approval of the purchaser (5.2.3).

TABLE 2
MECHANICAL REQUIREMENTS

Copper Alloy UNS No.	Tensile Strength, min ksi[B]	Tensile Strength, min MPa[C]	Yield Strength,[A] min ksi[B]	Yield Strength,[A] min MPa[C]	Elongation in 2 in. or 50 mm, min, %
C83450	30	207	14	97	25
C83600	30	207	14	97	20
C83800	30	207	13	90	20
C84400	29	200	13	90	18
C84800	28	193	12	83	16
C85200	35	241	12	83	25
C85400	30	207	11	76	20
C85700	40	276	14	97	15
C86200	90	621	45	310	18
C86300	110	758	60	414	12
C86400	60	414	20	138	15
C86500	65	448	25	172	20
C86700	80	552	32	221	15
C87300	45	310	18	124	20
C87400	50	345	21	145	18
C87500	60	414	24	165	16
C87600	60	414	30	207	16
C87610	45	310	18	124	20
C89510	26	184	17	120	8
C89520	25	176	17	120	6
C89844	28	193	13	90	15
C90300	40	276	18	124	20
C90500	40	276	18	124	20
C92200	34	234	16	110	22
C92210	32	225	15	103	20
C92300	36	248	16	110	18
C92600	40	276	18	124	20
C93200	30	207	14	97	15
C93500	28	193	12	83	15
C93700	30	207	12	83	15
C93800	26	179	14	97	12
C94300	24	165	...	...	10
C94700	45	310	20	138	25
C94700 (HT)	75	517	50	345	5
C94800	40	276	20	138	20
C94900	38	262	15	103	15
C96800	125	862	100[D]	689[D]	3
C96800 (HT)	135	931	120[D]	821[D]	...
C97300	30	207	15	103	8
C97600	40	276	17	117	10
C97800	50	345	22	152	10

[A] Yield strength shall be determined as the stress producing an elongation under load of 0.5%, that is, 0.01 in. (0.254 mm) in a gage length of 2 in. or 50 mm.
[B] ksi = 1000 psi.
[C] See Appendix X1.
[D] Yield strength 0.2%, offset.

TABLE 3
SUGGESTED HEAT TREATMENTS

Copper Alloy UNS No.	Solution Treatment (not less than 1 h followed by water quench)	Annealing Treatment (not less than 2 h followed by air cool)
C96800	1500°F (815°C)	(Age to develop properties) 660°F (350°C)
	Solution treatment (not less than 2 h followed by water quench)	Precipitation hardening (5 h)
C94700	1425–1475°F (775–800°C)	580–620°F (305–325°C)

10. ASME Requirements

10.1 Castings in copper alloy UNS Nos. C84400, C90300, C92200, C93700, and C97600 shall comply with the following:

10.1.1 Certification requirements of Specification SB-824. A manufacturer's certificate of compliance shall be furnished to the purchaser stating that samples representing each lot have been tested and inspected in accordance with this specification and the requirements have been met.

10.1.2 Foundry test report requirements of Specification B 824.

10.1.3 Castings shall be marked with the manufacturer's name, the copper alloy UNS number, and the casting quality factor. In addition, heat numbers or serial numbers that are traceable to heat numbers shall be marked on all pressure-containing castings individually weighing 50 lbs (22.7 kg) or more. Pressure-containing castings weighing less than 50 lbs (22.7 kg) shall be marked with either the heat number or a serial number that will identify the casting as to the month in which it was poured. Marking shall be in such a position as to not impair the usefulness of the casting.

10.2 The castings shall not be repaired, plugged, welded, or "burned in" unless permission from the purchaser has been previously secured. This will be given only when the defects are such that after the approved repair the usefulness and strength of the castings has not been impaired.

10.3 Alloys in this specification are generally weldable. Preparation for repair welding shall include inspection to ensure complete removal of the defect. Repairs shall be made utilizing welding procedures qualified in accordance with Section IX if the ASME code and repair welding shall be done by welders or welding operators meeting the qualification requirements of ASME Section

TABLE 4
CHEMICAL REQUIREMENTS

Copper Alloy UNS No.	Composition, % Max Except as Indicated																			
	Major Elements											Residual Elements								
	Copper	Tin	Lead	Zinc	Iron	Nickel Incl. Cobalt	Alumi-num	Manga-nese	Silicon	Bismuth	Selenium	Iron	Anti-mony	Nickel incl. Cobalt	Sulfur	Phos-phorus	Alumi-num	Manga-nese	Silicon	Lead
C83450	87.0–89.0	2.0–3.5	1.5–3.0	5.5–7.5	...	0.75–2.0	...	...	...	...	...	0.30	0.25	...	0.08	0.05	0.005	...	0.005	...
C83600	84.0–86.0	4.0–6.0	4.0–6.0	4.0–6.0	...	1.0[A]	...	...	...	...	...	0.30	0.25	...	0.08	0.05	0.005	...	0.005	...
C83800	82.0–83.8	3.3–4.2	5.0–7.0	5.0–8.0	...	1.0[A]	...	...	...	...	...	0.30	0.25	...	0.08	0.03	0.005	...	0.005	...
C84400	78.0–82.0	2.3–3.5	6.0–8.0	7.0–10.0	...	1.0[A]	...	...	...	...	...	0.40	0.25	...	0.08	0.02	0.005	...	0.005	...
C84800	75.0–77.0	2.0–3.0	5.5–7.0	13.0–17.0	...	1.0[A]	...	...	...	...	...	0.40	0.25	...	0.08	0.02	0.005	...	0.005	...
C85200	70.0–74.0	0.7–2.0	1.5–3.8	20.0–27.0	...	...	...	...	...	...	...	0.6	0.20	1.0	0.05	0.02	0.005	...	0.05	...
C85400	65.0–70.0	0.50–1.5	1.5–3.8	24.0–32.0	...	...	...	...	...	...	...	0.7	...	1.0	...	...	0.35	...	0.05	...
C85700	58.0–64.0	0.50–1.5	0.8–1.5	32.0–40.0	...	...	...	...	...	...	...	0.7	...	1.0	...	...	0.80	...	0.05	...
C86200	60.0–66.0	0.20	0.20	22.0–28.0	2.0–4.0	...	3.0–4.9	2.5–5.0	...	...	...	...	...	1.0	...	...	...	...	...	...
C86300	60.0–66.0	0.20	0.20	22.0–28.0	2.0–4.0	...	5.0–7.5	2.5–5.0	...	...	...	...	...	1.0	...	...	...	...	...	...
C86400	56.0–62.0	0.50–1.5	0.50–1.5	34.0–42.0	0.40–2.0	...	0.50–1.5	0.10–1.0	...	...	...	...	...	1.0	...	...	...	...	...	...
C86500	55.0–60.0	1.0	0.40	36.0–42.0	0.40–2.0	...	0.50–1.5	0.10–1.5	...	...	...	...	...	1.0	...	...	...	...	...	...
C86700	55.0–60.0	1.5	0.50–1.5	30.0–38.0	1.0–3.0	...	1.0–3.0	1.0–3.5	...	...	...	...	...	1.0	...	...	...	...	...	...
C87300	94.0 min	0.20	0.25	...	...	...	...	0.8–1.5	3.6–5.0	...	...	0.20	...	...	...	...	...	...	...	...
C87400	79.0 min	...	1.0	12.0–16.0	...	...	...	...	2.5–4.0	...	...	...	...	...	...	...	0.80	...	...	...
C87500	79.0 min	...	0.50	12.0–16.0	...	...	...	...	3.0–5.0	...	...	...	...	...	...	...	0.50	...	...	...
C87600	88.0 min	...	0.50	4.0–7.0	...	...	...	...	3.5–5.5	...	...	...	...	...	...	...	...	...	...	...
C87610	90.0 min	...	0.20	3.0–5.0	...	...	...	...	3.0–5.0	...	...	0.20	...	...	...	...	...	0.25	...	...
C89510	86.0–88.0	4.0–6.0	0.25	4.0–6.0	0.30	1.0	...	...	...	0.5–1.5	0.35–0.70	...	0.25	...	0.08	0.05	0.005	...	0.005	...
C89520	85.0–87.0	5.0–6.0	0.25	4.0–6.0	0.20	1.0	...	...	...	1.6–2.2	0.8–1.1	...	0.25	...	0.08	0.05	0.005	...	0.005	...
C89844	83.0–86.0	3.0–5.0	...	7.0–10.0	...	1.0[A]	...	...	...	2.0–4.0	...	0.30	0.25	...	0.08	0.05	0.005	...	0.005	0.2
C90300	86.0–89.0	7.5–9.0	0.30	3.0–5.0	...	1.0[A]	...	...	...	...	...	0.20	0.20	...	0.05	0.05	0.005	...	0.005	...
C90500	86.0–89.0	9.0–11.0	0.30	1.0–3.0	...	1.0[A]	...	...	...	...	...	0.20	0.20	...	0.05	0.05	0.005	...	0.005	...
C92200	86.0–90.0	5.5–6.5	1.0–2.0	3.0–5.0	...	1.0[A]	...	...	...	...	...	0.25	0.25	...	0.05	0.05	0.005	...	0.005	...
C92210	86.0–89.0	4.5–5.5	1.7–2.5	3.0–4.5	...	0.7–1.0	...	...	...	...	...	0.25	0.20	...	0.05	0.03	0.005	...	0.005	...
C92300	85.0–89.0	7.5–9.0	0.30–1.0	2.5–5.0	...	1.0[A]	...	...	...	...	...	0.25	0.25	...	0.05	0.05	0.005	...	0.005	...
C92600	86.0–88.5	9.3–10.5	0.8–1.5	1.3–2.5	...	0.7[A]	...	...	...	...	...	0.20	0.25	...	0.05	0.03	0.005	...	0.005	...
C93200	81.0–85.0	6.3–7.5	6.0–8.0	2.0–4.0	...	1.0[A]	...	...	...	...	...	0.20	0.35	...	0.08	0.15	0.005	...	0.005	...
C93500	83.0–86.0	4.3–6.0	8.0–10.0	2.0	...	1.0[A]	...	...	...	...	...	0.20	0.30	...	0.08	0.05	0.005	...	0.005	...
C93700	78.0–82.0	9.0–11.0	8.0–11.0	0.8	...	1.0[A]	...	...	...	...	...	0.15	0.50	...	0.08	0.15	0.005	...	0.005	...
C93800	75.0–79.0	6.3–7.5	13.0–16.0	0.8	...	1.0[A]	...	...	...	...	...	0.15	0.80	...	0.08	0.05	0.005	...	0.005	...
C94300	67.0–72.0	4.5–6.0	23.0–27.0	0.8	...	1.0[A,B,C]	...	...	...	...	...	0.15	0.80	...	0.08	0.05	0.005	...	0.005	...
C94700	85.0–90.0	4.5–6.0	0.10	1.0–2.5	...	4.5–6.0	...	...	...	...	...	0.25	0.15	...	0.05	0.05	0.005	0.20	0.005	...
C94800	84.0–89.0	4.5–6.0	0.30–1.0	1.0–2.5	...	4.5–6.0	...	...	...	...	...	0.25	0.15	...	0.05	0.05	0.005	0.20	0.005	...
C94900	79.0–81.0	4.0–6.0	4.0–6.0	4.0–6.0	...	4.0–6.0	...	...	...	...	...	0.30	0.25	...	0.08	0.05	0.005	0.10	0.005	...
C96800	remainder	...	0.005	1.0	0.50	9.5–10.5	0.10	0.05–0.30	...	...	...	...	0.02	...	0.0025	0.005	...	...	...	...
C97300	53.0–58.0	1.5–3.0	8.0–11.0	17.0–25.0	1.5	11.0–14.0	...	...	...	...	...	...	0.35	...	0.08	0.05	0.005	0.50	0.15	...
C97600	63.0–67.0	3.5–4.5	3.0–5.0	3.0–9.0	1.5	19.0–21.5	...	...	...	...	...	...	0.25	...	0.08	0.05	0.005	1.0	0.15	...
C97800	64.0–67.0	4.0–5.5	1.0–2.5	1.0–4.0	1.5	24.0–27.0	...	...	...	...	...	...	0.20	...	0.08	0.05	0.005	1.0	0.15	...

[A] In determining copper minimum, copper may be calculated as copper plus nickel.
[B] It is possible that the mechanical requirements of copper alloy UNS No. C94700 (heat treated) will not be obtained if the lead content exceeds 0.01%.
[C] Niobium 0.10–0.30%, boron 0.001% max, bismuth 0.001% max, magnesium 0.0005–0.15%, and titanium 0.01% max.

IX. The following records shall be maintained:

10.3.1 A sketch or drawing showing the dimensions, depth, and location of excavations,

10.3.2 Postweld heat treatment, when applicable,

10.3.3 Weld repair inspection results,

10.3.4 Casting identification number,

10.3.5 Weld procedure identification number,

10.3.6 Welder identification, and

10.3.7 Name of inspector.

11. Sampling

11.1 Test bar castings for copper alloy UNS Nos. C86200, C86300, C86400, C86500, and C86700 shall be cast to the form and dimensions shown in Figs. 1 or 2 of Practice B 208. Test bar castings for all other alloys listed in this specification shall be cast to the form and dimensions shown in Figs. 2, 3, or 4 of Practice B 208.

11.2 When castings are specified to meet the requirements of the ASME Boiler and Pressure Vessel Code, for small remelts the lot size shall not exceed 1000 lbs (455 kg) of castings and shall consist of all of the metal from a single master heat poured from an individual melting unit or group of melting units operating during the course of one-half shift, not to exceed 5 h.

12. Test Methods

12.1 Analytical chemical methods are given in Specification B 824.

13. Keywords

13.1 copper alloy castings; copper-base alloy castings; sand castings

TABLE 5
SUM OF ALL NAMED ELEMENTS ANALYZED

Copper Alloy UNS Number	Copper Plus Major Elements, % Minimum
C83450	99.3
C83600	99.3
C83800	99.3
C84400	99.3
C84800	99.3
C85200	99.1
C85400	98.9
C85700	98.7
C86200	99.0
C86300	99.0
C86400	99.0
C86500	99.0
C86700	99.0
C87300	99.5
C87400	99.2
C87500	99.5
C87600	99.5
C87610	99.5
C89510	99.3
C89520	99.3
C89844	99.3
C90300	99.4
C90500	99.7
C92200	99.3
C92210	99.3
C92300	99.3
C92600	99.3
C93200	99.2
C93500	99.4
C93700	99.0
C93800	98.9
C94300	99.0
C94700	99.3
C94800	99.3
C94900	99.2
C96800	99.5
C97300	99.0
C97600	99.7
C97800	99.6

APPENDIX

(Nonmandatory Information)

X1. METRIC EQUIVALENTS

X1.1 The SI unit for strength properties now shown is in accordance with the International System of Units (SI). The derived SI unit for force is the newton (N), which is defined as that force that when applied to a body having a mass of one kilogram gives it an acceleration of one meter per second squared ($N = kg \cdot m/s^2$). The derived SI unit for pressure or stress is the newton per square meter (N/m^2), which has been named the pascal (Pa) by the General Conference on Weights and Measures. Since 1 ksi = 6 894 757 Pa, the metric equivalents are expressed as megapascal (MPa), which is the same as MN/m^2 and N/mm^2.

SPECIFICATION FOR NICKEL-IRON-CHROMIUM-MOLYBDENUM-COLUMBIUM STABILIZED ALLOY (UNS N08700) PLATE, SHEET, AND STRIP

SB-599

(Identical with ASTM Specification A 599-92.)

1. Scope

1.1 This specification covers nickel-iron-chromium-molydenum-columbium stabilized alloy (UNS N08700) plate, sheet, and strip in the solution-annealed condition.

1.2 The values stated in inch-pound units are to be regarded as the standard.

2. Referenced Documents

2.1 *ASTM Standards:*

A 262 Practices for Detecting Susceptibility to Intergranular Attack in Austenitic Stainless Steels

E 8 Test Methods of Tension Testing of Metallic Materials

E 10 Test Method for Brinell Hardness of Metallic Materials

E 18 Test Methods for Rockwell Hardness and Rockwell Superficial Hardness of Metallic Materials

E 29 Practice for Using Significant Digits in Test Data to Determine Conformance with Specifications

E 55 Practice for Sampling Wrought Nonferrous Metals and Alloys for Determination of Chemical Composition

E 140 Hardness Conversion Tables for Metals (Relationship Between Brinell Hardness, Vickers Hardness, Rockwell Hardness, Rockwell Superficial Hardness, and Knoop Hardness)

E 350 Test Method for Chemical Analysis of Carbon Steel, Low-Alloy Steel, Silicon Electrical Steel, Ingot Iron, and Wrought Iron

E 353 Test Methods for Chemical Analysis of Stainless, Heat-Resisting, Maraging, and Other Similar Chromium-Nickel-Iron Alloys

3. Terminology

3.1 *Descriptions of Terms Specific to This Standard:*

3.1.1 The terms plate, sheet, and strip as used in this specification are described as follows:

3.1.1.1 *plate* — material 0.1875 in. (4.76 mm) and over in thickness and over 10 in. (254 mm) in width.

3.1.1.2 *sheet* — material under 0.1875 in. (4.76 mm) in thickness and over 24 in. (610 mm) in width.

3.1.1.3 *strip* — material under 0.1875 in. (4.76 mm) in thickness and under 24 in. (610 mm) in width.

4. Ordering Information

4.1 Orders for material under this specification should include the following information:

4.1.1 Quantity (weight or number of pieces).

4.1.2 Name of material or UNS N08700.

4.1.3 Form (plate, sheet, or strip).

4.1.4 Dimensions.

4.1.5 Type of edge required (for strip only, see 9.4).

4.1.6 *Finish* (Section 10) — For sheet ordered with No.4 finish, specify whether one or both sides are to be polished.

4.1.7 ASTM designation and year of issue.

4.1.8 *Corrosion Test* — State if intergranular corrosion test is required (Section 8).

4.1.9 *Marking* — State if metal die identification is required on plate $\frac{1}{4}$ in. (6.35 mm) or thicker (Section 17).

4.1.10 *Certification or Test Reports* — State if certification or test reports are required (Section 16).

TABLE 1
CHEMICAL REQUIREMENTS

Element	Composition, %
Nickel	24.0–26.0
Iron	remainder[A]
Chromium	19.0–23.0
Molybdenum	4.3–5.0
Columbium	8 × carbon to 0.40
Carbon, max	0.04
Silicon, max	1.00
Manganese, max	2.00
Phosphorus, max	0.040
Sulfur, max	0.030
Copper, max	0.50

[A] Determined arithmetically by difference.

TABLE 2
PRODUCT (CHECK) ANALYSIS

Element	Tolerances Over the Maximum Limit or Under the Minimum Limit, %
Nickel	0.20
Chromium	0.20
Molybdenum	0.10
Columbium	0.05
Carbon	0.01
Silicon	0.05
Manganese	0.04
Phosphorus	0.005
Sulfur	0.005
Copper	0.03

5. Materials and Manufacture

5.1 *Heat Treatment* — The final heat treatment shall be a solution anneal. Minor cold working such as flattening or temper rolling may be performed after the final solution annealing treatment.

NOTE — This recommended solution anneal consists of heating to a minimum temperature of 2000°F (1090°C) and cooling rapidly to room temperature.

6. Chemical Composition

6.1 The material sampled, in accordance with 11.2, shall conform to the composition limits prescribed in Table 1.

6.2 If a product analysis is subsequently made, the material shall conform to the composition limits with the product analysis variation prescribed in Table 2.

7. Mechanical Requirements

7.1 The material shall conform to the requirements as to the mechanical property prescribed in Table 3.

8. Intergranular Corrosion Test

8.1 All material supplied to this specification shall be capable of passing the intergranular corrosion test, but the test need not be performed on any given lot unless it is specified on the purchase order. If the test is specified, it shall be performed by the manufacturer on specimens taken in the as-shipped condition. Specimens shall be tested in the sensitized condition (1 h at 1250°F (677°C)), and tested in accordance with Practice C of Practices A 262. The corrosion rate shall not exceed 2.5 mils/month (165 mg/dm^2·day).

9. Dimensions and Permissible Variations

9.1 *Sheet* — The material referred to as sheet shall conform to the variations in dimensions prescribed in Tables 4 to 9, inclusive.

9.2 *Cold-Rolled Strip* — The material referred to as cold-rolled strip shall conform to the permissible variations in dimensions prescribed in Tables 10 to 13, inclusive.

9.3 *Plate* — The material referred to as plate shall conform to the permissible variations in dimensions prescribed in Tables 14 to 19, inclusive.

9.4 *Edges for Cold-Rolled Strip:*

9.4.1 The various types of edges procurable shall be as follows:

9.4.1.1 *No. 1 Edge* — Rolled edge, contour as specified.

9.4.1.2 *No. 3 Edge* — An edge produced by slitting.

9.4.1.3 *No. 5 Edge* — Approximately square edge produced by rolling or filing, or both, after slitting.

10. Workmanship, Finish, and Appearance

10.1 The material shall be free of injurious imperfections and shall correspond to the designated finish as described as follows:

10.1.1 *Sheet* — The various types of finish procurable on sheet products shall be as follows:

10.1.1.1 *No. 1 Finish* — Hot rolled, annealed, and descaled; produced by hot rolling to specified thicknesses followed by annealing and descaling (see 10.2).

10.1.1.2 *No. 2D Finish* — Dull, cold-rolled finish; produced by cold rolling to the specified thickness,

TABLE 3
MECHANICAL PROPERTY REQUIREMENTS

Form	Tensile Strength, min, ksi (MPa)	Yield Strength (0.2 % offset), min, ksi (MPa)	Elongation in 2 in. or 50 mm, or 4D, min, %	Rockwell Hardness (or equivalent)[A]
Sheet	80 (550)	35 (240)	30	75–90 HRB
Strip	80 (550)	35 (240)	30	75–90 HRB
Plate	80 (550)	35 (240)	30	75–90 HRB

[A] Hardness values are shown for information only and shall not constitute a basis for acceptance or rejection as long as the other mechanical properties are met.

TABLE 4
THICKNESS TOLERANCES FOR HOT-ROLLED AND COLD-ROLLED SHEETS

Specified Thickness, in. (mm)	Tolerance, over and under, in. (mm)
Over 0.145 to less than 0.1875 (3.68 to less than 4.76)	0.014 (0.36)
Over 0.130 to 0.145 (3.30 to 3.68), incl	0.012 (0.30)
Over 0.114 to 0.130 (2.90 to 3.30), incl	0.010 (0.25)
Over 0.098 to 0.114 (2.49 to 2.90), incl	0.009 (0.23)
Over 0.083 to 0.098 (2.11 to 2.49), incl	0.008 (0.20)
Over 0.072 to 0.083 (1.83 to 2.11), incl	0.007 (0.18)
Over 0.058 to 0.072 (1.47 to 1.83), incl	0.006 (0.15)
Over 0.040 to 0.058 (1.02 to 1.47), incl	0.005 (0.13)
Over 0.026 to 0.040 (0.66 to 1.02), incl	0.004 (0.10)
Over 0.016 to 0.026 (0.41 to 0.66), incl	0.003 (0.08)
Over 0.007 to 0.016 (0.18 to 0.41), incl	0.002 (0.05)
Over 0.005 to 0.007 (0.13 to 0.18), incl	0.0015 (0.04)
0.005 (0.13)	0.001 (0.03)

TABLE 5
WIDTH AND LENGTH TOLERANCES FOR HOT-ROLLED AND COLD-ROLLED RESQUARED SHEETS (STRETCHER LEVELED FLATNESS)

Specified Dimensions, in. (mm)	Tolerance, in. (mm) Over	Under
For thicknesses under 0.031 (0.79):		
Widths up to 48 (1219), excl	1/16 (1.6)	0
Widths 48 (1219) and over	1/8 (3.2)	0
Lengths up to 120 (3048), excl	1/16 (1.6)	0
Lengths 120 (3048) and over	1/8 (3.2)	0
For thicknesses 0.031 (0.79) and over:		
All widths and lengths	1/4 (6.4)	0

annealing, and descaling. The dull finish results from the descaling and pickling operations.

10.1.1.3 *No. 2B Finish* — Bright, cold-rolled finish; produced by giving a final light cold-rolled pass with polished rolls, to a sheet that has been annealed and descaled.

10.1.1.4 *No. 4 Finish* — General-purpose polished finish. Following initial grinding with coarser abrasives, sheets are generally finished last with abrasives approximately 120 to 150 mesh. Sheets can be produced with one or two sides polished. When polished on one side only, the other side may be rough ground in order to obtain the necessary flatness.

10.1.1.5 *Bright Annealed* — Bright finish produced by cold rolling to thickness, then annealing in a protective atmosphere.

10.1.2 *Strip* — The type of finish procurable on cold-rolled strip shall be as follows:

10.1.2.1 *No. 1 Finish* — Cold rolled to specified thickness, annealed, and pickled (see 10.2). Appearance of this finish is a dull gray.

10.1.2.2 *No. 2 Finish* — Same as No. 1 finish, followed by a final light cold-rolled pass, generally on highly polished rolls.

10.1.2.3 *Bright Annealed* — Bright finish produced by cold rolling to thickness, then annealing in a protective atmosphere.

TABLE 6
WIDTH, LENGTH, AND CAMBER TOLERANCES FOR HOT-ROLLED AND COLD-ROLLED SHEETS NOT RESQUARED

Width Tolerances		
	Tolerance for Specified Width, in. (mm)	
Specified Thickness, in. (mm)	24 to 48 (610 to 1219), excl	48 (1219) and Over
Less than 3/16 (4.76)	1/16 (1.6) over, 0 under	1/8 in. (3.2) over, 0 under

Length Tolerances		
	Tolerance, in. (mm)	
Specified Length, ft (mm)	Over	Under
Up to 10 (3050), incl	1/4 (6.4)	0 (0)
Over 10 to 20 (3050 to 6100), incl	1/2 (12.7)	0 (0)

Camber Tolerances[A]	
Specified Width, in. (mm)	Tolerance per Unit Length of any 8 ft (2440 mm), in. (mm)
24 to 36 (610 to 914), incl	1/8 (3.2)
Over 36 (914)	3/32 (2.4)

[A] Camber is the greatest deviation of a side edge from a straight line, and measurement is taken by placing an 8-ft (2440-mm) straightedge on the concave side and measuring the greatest distance between the sheet edge and the straightedge.

TABLE 7
FLATNESS TOLERANCES FOR HOT-ROLLED AND COLD-ROLLED SHEETS

Sheets not Specified to Stretcher Leveled Standard of Flatness		
Specified Thickness, in. (mm)	Width, in. (mm)	Flatness Tolerance (max Deviation from a Horizontal Flat Surface), in. (mm)
0.062 (1.57) and over	to 60 (1524), incl	1/2 (12.7)
	over 60 to 72 (1524 to 1829), incl	3/4 (19.1)
	over 72 (1829)	1 (25.4)
Under 0.062 (1.57)	to 36 (914), incl	1/2 (12.7)
	over 36 to 60 (914 to 1524), incl	3/4 (19.1)
	over 60 (1524)	1 (25.4)

Sheets Specified to Stretcher Level Standard of Flatness			
Specified Thickness, in. (mm)	Width, in. (mm)	Length, in. (mm)	Flatness Tolerance, in. (mm)
Under 3/16 (4.76)	to 48 (1219), incl	to 96 (2438), incl	1/8 (3.2)
Under 3/16 (4.76)	to 48 (1219), incl	over 96 (2438)	1/4 (6.4)
Under 3/16 (4.76)	over 48 (1219)	to 96 (2438), incl	1/4 (6.4)
Under 3/16 (4.76)	over 48 (1219)	over 96 (2438)	1/4 (6.4)

TABLE 8
DIAMETER TOLERANCES FOR HOT-ROLLED AND COLD-ROLLED SHEETS, SHEARED CIRCLES

Specified Thickness, in. (mm)	Tolerance Over Specified Diameter (No Tolerance Under), in. (mm)		
	Under 30 (762)	30 to 48 (762 to 1219), incl	Over 48 (1219)
Over 0.097 (2.46)	1/8 (3.2)	3/16 (4.8)	1/4 (6.4)
Over 0.057 to 0.097 (1.45 to 2.46), incl	3/32 (2.4)	5/32 (4.0)	7/32 (5.6)
0.057 (1.45) and under	1/16 (1.6)	1/8 (3.2)	3/16 (4.8)

TABLE 9
WEIGHT TOLERANCES FOR HOT-ROLLED AND COLD-ROLLED SHEETS

It is not practicable to produce hot-rolled and cold-rolled sheets to exact theoretical weight. Sheets of any one item of a specified thickness and size in any finish may be overweight to the following extent:

(1) An item of five sheets or less, or an item estimated to weigh 200 lb (90.7 kg) or less, may actually weigh as much as 10% over the theoretical weight.

(2) An item of more than five sheets and estimated to weigh more than 200 lb (90.7 kg) may actually weigh as much as 7½% over the theoretical weight.

(3) The underweight variations for sheets are limited by the under thickness tolerances shown in Table 4.

For determining theoretical weight the factor, 42 lb/ft^2 · in. (0.0008 kg/cm^2 · mm) thickness may be used.

10.1.3 *Plate* — The types of finish procurable on plates shall be as follows:

10.1.3.1 *Hot- or Cold-Rolled, Annealed* — Scale not removed (see 10.2).

10.1.3.2 *Hot- or Cold-Rolled, Annealed, Descaled* — Scale removed by a blast cleaning or pickling operation (see 10.2).

10.2 Spot grinding to remove surface imperfections is permitted for material produced in accordance with 10.1.1.1, 10.1.2.1, 10.1.3.1, and 10.1.3.2, provided such grinding does not reduce the thickness or width at any point beyond the permissible variations in dimensions.

11. Sampling

11.1 *Lots of Chemical Analysis, Mechanical Testing, and Corrosion Testing:*

11.1.1 A lot for chemical analysis shall consist of one heat.

11.1.2 *Plate* — A lot of plate for testing and inspection purposes shall consist of the products resulting from the rolling of one heat of material in the same condition and specified thickness, solution annealed by the same practice, but in no case more than 25,000 lb (11,340 kg).

11.1.3 *Sheet and Strip* — A lot of sheet or strip for testing and inspection purposes shall consist of material from one heat in the same form (sheet or strip), condition, finish, and specified thickness, solution annealed by the same practice but in no case more than 25,000 lb (11,340 kg).

11.2 *Sampling for Chemical Analysis:*

11.2.1 A representative sample shall be taken from each lot during pouring or subsequent processing.

11.2.2 Product analysis, if performed, shall be wholly the responsibility of the purchaser.

11.3 *Sampling for Mechanical Tests:*

11.3.1 A sample of the material to provide test specimens for mechanical tests shall be taken from such a location in each lot as to be representative of that lot.

11.3.2 When samples are to be taken after delivery, the purchaser of material ordered to cut lengths may request on the purchase order additional material of adequate size to provide sample coupons for inspection purposes.

11.4 *Sampling for Corrosion Tests* — A sample for corrosion testing shall be taken from a location chosen to be representative of the lot.

12. Number of Tests and Retests

12.1 In the case of sheet or strip supplied in coil form, two or more tension tests (one from each end of each coil), and one or more hardness tests shall be made on specimens taken from each end of the coil. When material is supplied in flat sheet, flat strip, or plate, one tension

TABLE 10
THICKNESS TOLERANCES[A,B,C] FOR COLD-ROLLED STRIP FOR THE THICKNESSES AND WIDTHS GIVEN, OVER AND UNDER

	Width, in.							
	0.187 to 1, incl	Over 1 to 3, incl	Over 3 to 6, incl	Over 6 to 9, incl	Over 9 to 12, incl	Over 12 to 16, incl	Over 16 to 20, incl	Over 20 to 24, incl
Specified Thickness, in.	Thickness Tolerance, in.							
Over 0.160 to less than 0.1875	0.002	0.003	0.004	0.004	0.004	0.005	0.006	0.006
Over 0.099 to 0.160, incl	0.002	0.002	0.003	0.003	0.004	0.004	0.005	0.005
Over 0.068 to 0.099, incl	0.002	0.002	0.003	0.003	0.003	0.004	0.004	0.004
Over 0.049 to 0.068, incl	0.002	0.002	0.003	0.003	0.003	0.003	0.004	0.004
Over 0.039 to 0.049, incl	0.002	0.002	0.0025	0.003	0.003	0.003	0.004	0.004
Over 0.034 to 0.039, incl	0.002	0.002	0.0025	0.0025	0.003	0.003	0.003	0.003
Over 0.028 to 0.034, incl	0.0015	0.0015	0.002	0.002	0.0025	0.0025	0.003	0.003
Over 0.025 to 0.028, incl	0.001	0.0015	0.0015	0.002	0.002	0.002	0.0025	0.003
Over 0.019 to 0.025, incl	0.001	0.001	0.0015	0.0015	0.002	0.002	0.0025	0.0025
Over 0.016 to 0.019, incl	0.001	0.001	0.001	0.0015	0.0015	0.002	0.002	0.002
Over 0.012 to 0.016, incl	0.001	0.001	0.001	0.001	0.0015	0.0015	0.002	0.002
Over 0.011 to 0.012, incl	0.001	0.001	0.001	0.001	0.0015	0.0015	0.0015	0.0015
Over 0.010 to 0.011, incl	0.001	0.001	0.001	0.001	0.001	0.0015	0.0015	0.0015
0.010	0.001	0.001	0.001	0.001	0.001	0.001	0.0015	0.0015

	Width, mm							
	4.76 to 25.4, incl	Over 25.4 to 76.2, incl	Over 76.2 to 152.4, incl	Over 152.4 to 228.6, incl	Over 228.6 to 304.8, incl	Over 304.8 to 406.4, incl	Over 406.4 to 508, incl	Over 508 to 609.6, incl
Specified Thickness, mm	Thickness Tolerance, mm							
Over 4.06 to less than 4.75	0.05	0.08	0.10	0.10	0.10	0.13	0.15	0.15
Over 2.51 to 4.06, incl	0.05	0.05	0.08	0.08	0.10	0.10	0.13	0.13
Over 1.73 to 2.51, incl	0.05	0.05	0.08	0.08	0.08	0.10	0.10	0.10
Over 1.24 to 1.73, incl	0.05	0.05	0.08	0.08	0.08	0.08	0.10	0.10
Over 0.99 to 1.24, incl	0.05	0.05	0.06	0.08	0.08	0.08	0.10	0.10
Over 0.86 to 0.99, incl	0.05	0.05	0.06	0.06	0.08	0.08	0.08	0.08
Over 0.71 to 0.86, incl	0.04	0.04	0.05	0.05	0.06	0.06	0.08	0.08
Over 0.64 to 0.71, incl	0.02	0.04	0.04	0.05	0.05	0.05	0.06	0.08
Over 0.48 to 0.64, incl	0.02	0.02	0.04	0.04	0.05	0.05	0.06	0.06
Over 0.41 to 0.48, incl	0.02	0.02	0.02	0.04	0.04	0.05	0.05	0.05
Over 0.30 to 0.41, incl	0.02	0.02	0.02	0.02	0.04	0.04	0.05	0.05
Over 0.28 to 0.30, incl	0.02	0.02	0.02	0.02	0.04	0.04	0.04	0.04
Over 0.25 to 0.28, incl	0.02	0.02	0.02	0.02	0.02	0.04	0.04	0.04
0.25	0.02	0.02	0.02	0.02	0.02	0.02	0.04	0.04

[A] For thicknesses under 0.010 to 0.005 in. (0.254 to 0.127 mm), incl, in widths up to and including 16 in. (406 mm), a tolerance of ±10% of the thickness applies. For thicknesses under 0.010 to 0.005 in. (0.254 to 0.127 mm), incl, in widths over 16 to 24 in. (406 to 610 mm), excl, a tolerance of ±15 % of the thickness applies. For thickness tolerances on thicknesses under 0.005 in. (0.127 mm) in widths up to 24 in. (610 mm), excl, the producer should be consulted.

[B] Thickness measurements are taken $\frac{3}{8}$ in. (9.5 mm) in from the edge of the strip, except that on widths less than 1 in. (25.4 mm) the tolerances are applicable for measurements at all locations.

[C] The tolerances in this table do not include crown tolerances

TABLE 11
CROWN TOLERANCES FOR COLD-ROLLED STRIP

Specified Thickness, in. (mm)	Additional Thickness, at Middle of Strip Over That Shown in Table 10 for Edge Measurement, for Widths and Thicknesses Given, in. (mm)		
	Width, in. (mm)		
	To 5 (127), incl	Over 5 to 12 (127 to 305), incl	Over 12 to 24 (305 to 610), excl
0.005 to 0.010 (0.127 to 0.254), incl	0.0075 (0.19)	0.001 (0.02)	0.0015 (0.04)
Over 0.010 to 0.025 (0.254 to 0.635), incl	0.001 (0.02)	0.0015 (0.04)	0.002 (0.05)
Over 0.025 to 0.065 (0.635 to 1.65), incl	0.0015 (0.04)	0.002 (0.05)	0.0025 (0.06)
Over 0.065 to 0.1875 (1.65 to 4.76), excl	0.002 (0.05)	0.0025 (0.06)	0.003 (0.08)

and one or more hardness tests shall be made on each 100 or less sheets, strips, or plates of the same lot. When specified, one corrosion test shall be conducted for each lot.

12.2 If any specimens selected to represent any lot fail to meet any of the test requirements, the material represented by such specimens may be retested. If there is valid reason to believe the result is not representative, the material may be re-reannealed and retested.

13. Specimen Preparation

13.1 Tension test specimens from material under ½ in. (12.7 mm) in thickness shall be of the full thickness of the material and machined to the form and dimensions shown for the sheet-type specimen in Test Methods E 8. Tension test specimens from material ½ in. (12.7 mm) and over shall be of the full thickness of the material, machined to the form and dimensions shown for the plate-type specimen in Test Methods E 8, or shall be the largest possible round specimen shown in Test Methods E 8. Tension test specimens shall be taken from material after final heat treatment and shall be selected in the transverse direction unless prohibited by width.

13.2 Corrosion test specimens shall be prepared so that at least one major surface represents the as-supplied surface, with only light surface grinding permitted on this surface.

14. Test Methods

14.1 Determine the chemical composition and properties of the material as enumerated in this specification, in case of disagreement, in accordance with the following methods:

Test	ASTM Designations
Chemical analysis	E 350, E 353[A,B]
Tension	E 8
Brinell hardness	E10
Rockwell hardness	E 18
Hardness conversion	E 140
Rounding procedure	E 29
Method of sampling for product analysis	E 55
Intergranular corrosion test	A 262, Practice C

[A] Iron shall be determined arithmetically by difference.
[B] Test Methods E 350 are to be used only for elements not covered by Test Methods E 353.

14.2 For purpose of determining compliance with the limits in this specification, an observed value or a calculated value shall be rounded as indicated in accordance with the rounding method of Practice E 29.

Requirements	Rounded Unit for Observed or Calculated Value
Chemical composition hardness and tolerance (when expressed in decimals)	Nearest unit in the last right-hand place of figures of the specified limit
Tensile strength and yield strength	nearest 1000 psi (7 MPa)
Elongation	nearest 1%

15. Rejection and Rehearing

15.1 Material that fails to conform to the requirements of this specification may be rejected. Rejection should be reported to the producer or supplier promptly and in writing. In case of dissatisfaction with the results of the test, the producer or supplier may make claim for a rehearing.

16. Certification

16.1 When specified in the purchase order or contract, a manufacturer's certification shall be furnished to the

TABLE 12
WIDTH TOLERANCES FOR COLD-ROLLED STRIP ON EDGE NOS. 1, 5, and 3

Edge Nos. 1 and 5

Specified Edge No.	Width, in.	Thickness, in.	Width Tolerance for Thickness and Width Given, in.	
			Over	Under
1 and 5	9/32 and under	1/16 and under	0.005	0.005
1 and 5	over 9/32 to 3/4, incl	3/32 and under	0.005	0.005
1 and 5	over 3/4 to 5, incl	1/8 and under	0.005	0.005
5	over 5 to 9, incl	1/8 to 0.008, incl	0.010	0.010
5	over 9 to 20, incl	0.105 to 0.015	0.010	0.010
5	over 20 to 23 15/16, incl	0.080 to 0.023	0.015	0.015

Edge No. 3

Specified Thickness, in.	Width Tolerance for Thickness and Width Given, Over and Under, in.					
	Under 1/2 to 3/16, incl	1/2 to 6, incl	Over 6 to 9, incl	Over 9 to 12, incl	Over 12 to 21, incl	Over 21 to 24, incl
Under 0.1875 to 0.161, incl	...	0.016	0.020	0.020	0.031	0.031
0.160 to 0.100, incl	0.010	0.010	0.016	0.016	0.020	0.020
0.099 to 0.069, incl	0.008	0.008	0.010	0.010	0.016	0.020
0.068 and under	0.005	0.005	0.005	0.010	0.016	0.020

Edge Nos. 1 and 5

Specified Edge No.	Width, mm	Thickness, mm	Width Tolerance for Thickness and Width Given, mm	
			Over	Under
1 and 5	7.1 and under	1.6 and under	0.13	0.13
1 and 5	Over 7.1 to 19.0, incl	2.4 and under	0.13	0.13
1 and 5	Over 19.0 to 127	3.2 and under	0.13	0.13
5	Over 127 to 229	3.2 to 0.203, incl	0.25	0.25
5	Over 229 to 508	2.7 to 0.381, incl	0.25	0.25
5	Over 508 to 608	2.0 to 0.584, incl	0.38	0.38

Edge No. 3

Specified Thickness, mm	Width Tolerance for Thickness and Width Given, Over and Under, mm					
	Under 12.7 to 4.76, incl	12.7 to 152, incl	Over 152 to 229, incl	Over 229 to 305, incl	Over 305 to 533, incl	Over 533 to 610, excl
Under 4.76 to 4.09, incl	...	0.41	0.51	0.51	0.79	0.79
4.06 to 2.54, incl	0.25	0.25	0.41	0.41	0.51	0.51
2.51 to 1.75, incl	0.20	0.20	0.25	0.25	0.41	0.51
1.73 and under	0.13	0.13	0.13	0.25	0.41	0.51

TABLE 13
LENGTH AND CAMBER[A] TOLERANCES FOR COLD-ROLLED STRIP

Length Tolerances	
Specified Length, ft (mm)	Tolerance Over Specified Length (No Under Tolerance), in. (mm)
To 5 (1524), incl	3/8 (9.5)
Over 5 to 10 (1520 to 3050), incl	1/2 (12.7)
Over 10 to 20 (3050 to 6100), incl	5/8 (15.9)
Camber Tolerances	
Specified Width, in. (mm)	Tolerance per Unit Length of any 8 ft (2440 mm), in. (mm)
To 1 1/2 (38.1), incl	1/2 (12.7)
Over 1 1/2 to 24 (38.1 to 610), excl	1/4 (6.4)

[A] Camber is the deviation of a side edge from a straight line, and measurement is taken by placing an 8-ft straightedge on the concave side and measuring the greatest distance between the strip edge and the straightedge.

TABLE 14
THICKNESS[A] TOLERANCES ON PLATES[B,C]

	Width, in. (mm) Tolerance Over Specified Thickness, in. (mm)			
Specified Thickness, in. (mm)	To 84 (2134), incl	Over 84 to 120 (2134 to 3048), incl	Over 120 to 144 (3048 to 3658), incl	Over 144 (3658)
3/16 to 3/8 (4.76 to 9.53), excl	0.046 (1.17)	0.050 (1.27)		
3/8 to 3/4 (9.53 to 19.05), excl	0.054 (1.37)	0.058 (1.47)	0.075 (1.91)	0.090 (2.29)
3/4 to 1 (19.05 to 25.4), excl	0.060 (1.52)	0.064 (1.63)	0.083 (2.11)	0.100 (2.54)
1 to 2 (25.4 to 50.8), incl	0.070 (1.78)	0.074 (1.88)	0.095 (2.41)	0.115 (2.92)

[A] Thickness is measured along the longitudinal edges of the plate at least 3/8 in. (9.53 mm), but not more than 3 in. (76.20 mm), from the edge.

[B] For circles, the above over-thickness tolerances apply to the diameter of the circle corresponding to the width ranges shown. For plates of irregular shape, the above over-thickness tolerances apply to the greatest width corresponding to the width ranges shown.

[C] For plates up to 2 in. (50.8 mm), incl, in thickness, the tolerance under specified thickness is 0.01 in. (0.254 mm).

purchaser stating that material has been manufactured, tested, and inspected in accordance with this specification, and that the test results on representative samples meet specification requirements. When specified in the purchase order or contract, a report of the test results shall be furnished.

17. Product Marking

17.1 Each piece (plate, sheet, strip, or coil) shall be marked legibly with the specification number, UNS number, heat number, and the name of the manufacturer. When specified, marking shall be by die stamping on plates 1/4 in. (6.35 mm) or thicker.

TABLE 15
WIDTH AND LENGTH TOLERANCES FOR PLATES[A,B]

		Tolerance Over Specified Width and Length for Given Width, Length, and Thickness, in.					
		Under 3/8 in.		3/8 to 1/2, incl, in Thickness		Over 1/2 in Thickness	
Width, in.	Length, in.	Width	Length	Width	Length	Width	Length
48 and under	144 and under	1/8	3/16	3/16	1/4	5/16	3/8
Over 48 to 60, incl		3/16	1/4	1/4	5/16	3/8	7/16
Over 60 to 84, incl		1/4	5/16	5/16	3/8	7/16	1/2
Over 84 to 108, incl		5/16	3/8	3/8	7/16	1/2	9/16
Over 108		3/8	7/16	7/16	1/2	5/8	11/16
48 and under	over 144 to 240	3/16	3/8	1/4	1/2	5/16	5/8
Over 48 to 60, incl		1/4	7/16	5/16	5/8	3/8	3/4
Over 60 to 84, incl		3/8	1/2	7/16	11/16	1/2	3/4
Over 84 to 108, incl		7/16	9/16	1/2	3/4	5/8	7/8
Over 108		1/2	5/8	5/8	7/8	11/16	1
48 and under	over 240 to 360	1/4	1/2	5/16	5/8	3/8	3/4
Over 48 to 60, incl		5/16	5/8	3/8	3/4	1/2	3/4
Over 60 to 84, incl		7/16	11/16	1/2	3/4	5/8	7/8
Over 84 to 108, incl		9/16	3/4	5/8	7/8	3/4	1
Over 108		5/8	7/8	11/16	1	7/8	1
60 and under	over 360 to 480	7/16	1 1/8	1/2	1 1/4	5/8	1 3/8
Over 60 to 84, incl		1/2	1 1/4	5/8	1 3/8	3/4	1 1/2
Over 84 to 108, incl		9/16	1 1/4	3/4	1 3/8	7/8	1 1/2
Over 108		3/4	1 3/8	7/8	1 1/2	1	1 5/8
60 and under	over 480 to 600	7/16	1 1/4	1/2	1 1/2	5/8	1 5/8
Over 60 to 84, incl		1/2	1 3/8	5/8	1 1/2	3/4	1 5/8
Over 84 to 108, incl		5/8	1 3/8	3/4	1 1/2	7/8	1 5/8
Over 108		3/4	1 1/2	7/8	1 5/8	1	1 3/4
60 and under	over 600	1/2	1 3/4	5/8	1 7/8	3/4	1 7/8
Over 60 to 84, incl		5/8	1 3/4	3/4	1 7/8	7/8	1 7/8
Over 84 to 108, incl		5/8	1 3/4	3/4	1 7/8	7/8	1 7/8
Over 108		7/8	1 3/4	1	2	1 1/8	2 1/4

		Tolerance Over Specified Width and Length for Given Width, Length, and Thickness, mm					
		Under 9.5 mm		9.5 to 12.7 mm incl, in Thickness		Over 12.7 mm in Thickness	
Width, mm	Length, mm	Width	Length	Width	Length	Width	Length
1219 mm and under	3658 and under	3.2	4.8	4.8	6.4	7.9	9.5
Over 1219 to 1524, incl		4.8	6.4	6.4	7.9	9.5	11.1
Over 1524 to 2134, incl		6.4	7.9	7.9	9.5	11.1	12.7
Over 2134 to 2743, incl		7.9	9.5	9.5	11.1	12.7	14.3
Over 2743		9.5	11.1	11.1	12.7	15.9	17.5
1219 mm and under	over 3658 to 6096	4.8	9.5	6.4	12.7	7.9	15.9
Over 1219 to 1524, incl		6.4	11.1	7.9	15.9	9.5	19.1
Over 1524 to 2134, incl		9.5	12.7	11.1	17.5	12.7	19.1
Over 2134 to 2743, incl		11.1	14.3	12.7	19.1	15.9	22.2
Over 2743		12.7	15.9	15.9	22.2	17.5	25.4
1219 mm and under	over 6096 to 9144	6.4	12.7	7.9	15.9	9.5	19.1
Over 1219 to 1524, incl		7.9	15.9	9.5	19.1	12.7	19.1
Over 1524 to 2134, incl		11.1	17.5	12.7	19.1	15.9	22.2
Over 2134 to 2743, incl		14.3	19.1	15.9	22.2	19.1	25.4
Over 2743		15.9	22.2	17.5	25.4	22.2	25.4
1524 mm and under	over 9144 to 12 192	11.1	28.6	12.7	31.8	15.9	34.9
Over 1524 to 2134, incl		12.7	31.8	15.9	34.9	19.1	38.1
Over 2134 to 2743, incl		14.3	31.8	19.1	34.9	22.2	38.1
Over 2743		19.1	34.9	22.2	38.1	25.4	41.3
1524 mm and under	over 12 192 to 15 240	11.1	31.8	12.7	38.1	19.1	41.3
Over 1524 to 2134, incl		12.7	34.9	15.9	38.1	22.2	41.3
Over 2134 to 2743, incl		15.9	34.9	19.1	38.1	22.2	41.3
Over 2743		19.1	38.1	22.2	41.3	25.4	44.5
1524 mm and under	over 15 240	12.7	44.5	15.9	47.6	19.1	47.6
Over 1524 to 2134, incl		15.9	44.5	19.1	47.6	22.2	47.6
Over 2134 to 2743, incl		15.9	44.5	19.1	47.6	22.2	47.6
Over 2743		22.2	44.5	25.4	50.8	28.6	57.2

[A] The tolerance under specified width and length is 1/4 in. (6.35 mm).

[B] Rectangular plates over 1 in. (25.4 mm) in thickness are not commonly sheared and are machined or otherwise cut to length and width or produced in the size as rolled, uncropped.

TABLE 16
CAMBER TOLERANCE FOR PLATES

Maximum camber[A] = 1/8 in. (3.2 mm) in any 5 ft (1524 mm)

[A] Camber is the deviation of a side edge from a straight line, and measurement is taken by placing a 5-ft (1524-mm) straight-edge on the concave side and measuring the greatest distance between the plate and the staightedge.

TABLE 17
DIAMETER TOLERANCES FOR CIRCULAR PLATES

	Tolerance over Specified Diameter for Given Diameter and Thickness (No Under Tolerance), in. (mm)		
	Thickness		
Specified Diameter, in. (mm)	To 0.375 (9.53), excl	0.375 to 0.625 (9.53 to 15.88), excl	0.625 (15.88) and over
To 60 (1524), excl	1/4 (6.4)	3/8 (9.5)	1/2 (12.7)
60 to 84 (1524 to 2134), excl	5/16 (7.9)	7/16 (11.1)	9/16 (14.3)
84 to 108 (2134 to 2743), excl	3/8 (9.5)	1/2 (12.7)	5/8 (15.9)
108 to 130 (2743 to 3302), excl	7/16 (11.1)	9/16 (14.3)	11/16 (17.5)

TABLE 18
FLATNESS TOLERANCES FOR PLATES

Specified Thickness, in.	Flatness Tolerance (Deviation from a Flat Horizontal Surface) for Thickness and Width Given, in.								
	Width, in.								
	48 and Under	Over 48 to 60, excl	60 to 72, excl	72 to 84, excl	84 to 96, excl	96 to 108, excl	108 to 120, excl	120 to 144, excl	144 and Over
3/16 to 1/4, excl	3/4	1 1/16	1 1/4	1 3/8	1 5/8	1 5/8	1 7/8	2	
1/4 to 3/8, excl	11/16	3/4	15/16	1 1/8	1 3/8	1 7/16	1 9/16	1 7/8	
3/8 to 1/2, excl	1/2	9/16	11/16	3/4	15/16	1 1/8	1 1/4	1 7/16	1 3/4
1/2 to 3/4, excl	1/2	9/16	5/8	5/8	3/16	1 1/8	1 1/8	1 1/8	1 3/8
3/4 to 1, excl	1/2	9/16	5/8	5/8	3/4	3/16	15/16	1	1 1/8
1 to 1 1/2, excl	1/2	9/16	9/16	9/16	11/16	11/16	11/16	3/4	1
1 1/2 to 4, excl	3/16	5/16	3/8	7/16	1/2	9/16	5/8	3/4	7/8
4 to 6, excl	1/4	3/8	1/2	9/16	5/8	3/4	7/8	1	1 1/8

Specified Thickness, mm	Flatness Tolerance (Deviation from a Flat Horizontal Surface) for Thickness and Width Given, mm								
	Width, mm								
	1219 and Under	Over 1219 to 1524, excl	1524 to 1829, excl	1829 to 2134, excl	2134 to 2438, excl	2438 to 2743, excl	2743 to 3048, excl	3048 to 3658, excl	3658 and Over
4.76 to 6.35, excl	19.1	27.0	31.8	34.9	41.3	41.3	47.6	50.8	
6.35 to 9.53, excl	17.5	19.1	23.8	28.6	34.9	36.5	39.7	47.6	
9.53 to 12.7, excl	12.7	14.3	17.5	19.1	23.8	28.6	31.8	36.5	44.5
12.7 to 19.05, excl	12.7	14.3	15.9	15.9	20.6	28.6	28.6	28.6	34.9
19.05 to 25.4, excl	12.7	14.3	15.9	15.9	19.1	20.6	23.8	25.4	28.6
25.4 to 38.1, excl	12.7	14.3	14.3	14.3	17.5	17.5	17.5	19.1	25.4
38.1 to 102, excl	4.8	7.9	9.5	11.1	12.7	14.3	15.9	19.1	22.2
102 to 152, excl	6.4	9.5	12.7	14.3	15.9	19.1	22.2	25.4	28.6

TABLE 19
RECOMMENDED PLATE FLAME-CUTTING
TOLERANCES TO CLEANUP IN MACHINING

Specified Thickness, in. (mm)	Machining Allowance per Edge, in. (mm)
2 (51) and under	1/4 (6.4)
Over 2 to 3 (51 to 76), incl	3/8 (9.5)
Over 3 to 6 (76 to 152), incl	1/2 (12.7)

TABLE 20
ABRASIVE-CUTTING WIDTH AND LENGTH TOLERANCES

Specified Thickness, in. (mm)	Tolerance Over[A] Specified Width and Length, in. (mm)	
	Width	Length
Up to 1 1/4 (32)	1/8 (3.2)	1/8 (3.2)
Over 1 1/4 to 2 3/4 (32 to 70)	3/16 (4.8)	3/16 (4.8)

[A] The tolerance under the specified width and length is 1/8 in. (3.2 mm).

SPECIFICATION FOR WELDED NICKEL AND NICKEL-COBALT ALLOY PIPE

SB-619

(Identical with ASTM Specification B 619-00 except that certification has been made mandatory.)

1. Scope

1.1 This specification covers welded pipe of nickel and nickel-cobalt alloys (UNS N10001; UNS N10242; UNS N10665; UNS N12160; UNS N10624; UNS N10629; UNS N10675; UNS N10276; UNS N06455; UNS N06007; UNS N06975; UNS N08320; UNS N06002; UNS N06022; UNS N06058; UNS N06059; UNS N06200; UNS N06985; UNS N06030; UNS R30556; UNS N08031; UNS N06230; UNS N06686; UNS N06210; and UNS R20033), as shown in Table 1.

1.2 This specification covers pipe in Schedules 5S, 10S, 40S, and 80S through 8-in. nominal pipe size as set forth in ANSI B36.19 (see Table 2).

1.3 Two classes of pipe are covered as follows:

1.3.1 *Class I* — As welded and solution annealed or welded and sized and solution annealed.

1.3.2 *Class II* — Welded, cold worked, and solution annealed.

1.4 All pipe shall be furnished in the solution annealed and descaled condition. When atmosphere control is used, descaling is not necessary.

1.5 The values stated in inch-pound units are to be regarded as the standard. The values given in parentheses are for information only.

2. Referenced Documents

2.1 *ASTM Standard:*

B 775 Specification for General Requirements for Nickel and Nickel Alloy Welded Pipe

2.2 *ANSI Standards:*

B36.19 Stainless Steel Pipe

B2.1 Pipe Threads

3. General Requirement

3.1 Material furnished under this specification shall conform to the applicable requirements of Specification B 775 unless otherwise provided herein.

4. Ordering Information

4.1 It is the responsibility of the purchaser to specify all requirements that are necessary for the safe and satisfactory performance of material ordered under this specification. Examples of such requirements include, but are not limited to, the following:

4.1.1 *Alloy* (Table 1),

4.1.2 *Class* (1.3),

4.1.3 *Quantity* (feet or number of lengths),

4.1.4 *Size* (nominal size or outside diameter and schedule number or average wall thickness),

4.1.5 *Length* — Specify cut length or random,

4.1.6 *Certification* — Certification and a report of test results are required,

4.1.7 *Purchaser Inspection* — State which tests or inspections are to be witnessed,

4.1.8 *Ends* — Plain ends cut and deburred will be furnished, unless otherwise specified, and

4.1.9 *Samples for Product (Check) Analysis* — State whether samples shall be furnished.

5. Materials and Manufacture

5.1 The pipe shall be made from flat-rolled alloy by an automatic welding process with no addition of filler metal.

5.2 Subsequent to welding and prior to final heat treatment, Class II pipes shall be cold worked either in

TABLE 1
CHEMICAL REQUIREMENTS

	Composition Limits, %																						
	Ni	Cr	Mo	Fe	W	C	Si, Max	Co	Mn	V	P, Max	S, Max	Ti	Cu	Cb (Nb) + Ta	Al	Zr	La	N	B	Cb (Nb)	Ta	Ni + Mo	Mg
Ni-Mo Alloys																								
N10001	Remainder[A]	1.0 max	26.0–30.0	4.0–6.0	...	0.05 max	1.0	2.5 max	1.0 max	0.2–0.4	0.04	0.03												
N10665	Remainder[A]	1.0 max	26.0–30.0	2.0 max	...	0.02 max	0.10	1.0 max	1.0 max	...	0.04	0.03												
N10675	65.0 min.	1.0–3.0	27.0–32.0	1.0–3.0	3.0 max	0.01 max	0.10	3.0 max	3.0 max	0.20 max	0.030	0.010	0.20 max	0.20 max	...	0.50 max	0.10 max	...	...	...	0.20 max	0.20 max	94.0–98.0	
N10629	Remainder[A]	0.5–1.5	26.0–30.0	1.0–6.0	...	0.01 max	0.05	2.5 max	1.5 max	...	0.04	0.01	...	0.5 max	...	0.1–0.5	...	...	...	...	...	...		
N10624	Remainder[A]	6.0–10.0	21.0–25.0	5.0–8.0	...	0.01 max	0.10	1.0 max	1.0 max	...	0.025	0.01	...	0.5 max	...	...	...	...	...	...	...	...	...	
Ni-Mo-Cr-Fe Alloy N10242	Remainder[A]	7.0–9.0	24.0–26.0	2.0 max		0.03 max	0.80	1.00 max	0.80 max		0.030	0.015		0.50		0.50 max				0.006 max				
Low C Ni-Mo-Cr Alloys																								
N10276	Remainder[A]	14.5–16.5	15.0–17.0	4.0–7.0	3.0–4.5	0.010 max	0.08	2.5 max	1.0 max	0.35 max	0.04	0.03												
N06022	Remainder[A]	20.0–22.5	12.5–14.5	2.0–6.0	2.5–3.5	0.015 max	0.08	2.5 max	0.50 max	0.35 max	0.02	0.02												
N06455	Remainder[A]	14.0–18.0	14.0–17.0	3.0 max	...	0.015 max	0.08	2.0 max	1.0 max	...	0.04	0.03	0.70 max											
Ni-Cr-Fe-Mo-Cu Alloys																								
N06007	Remainder[A]	21.0–23.5	5.5–7.5	18.0–21.0	1.0 max	0.05 max	1.0	2.5 max	1.0–2.0		0.04	0.03		1.5–2.5	1.75–2.5									
N06975	47.0–52.0	23.0–26.0	5.0–7.0	Remainder[A]	...	0.03 max	1.0	...	1.0 max		0.03	0.03	0.70–1.50	0.70–1.20										
N06985	Remainder[A]	21.0–23.5	6.0–8.0	18.0–21.0	1.5 max	0.015	1.0	5.0 max	1.0 max	...	0.04	0.03	...	1.5–2.5	0.50 max									
N06030	Remainder[A]	28.0–31.5	4.0–6.0	13.0–17.0	1.5–4.0	0.03 max	0.8	5.0 max	1.5 max	...	0.04	0.02	...	1.0–2.4	0.30–1.50									
Ni-Fe-Cr-Mo Alloy																								
N08320	25.0–27.0	21.0–23.0	4.0–6.0	Remainder[A]	...	0.05 max	1.0		2.5 max		0.04	0.03	4 × C min.											
Ni-Cr-Mo-Fe Alloy																								
N06002	Remainder[A]	20.5–23.0	8.0–10.0	17.0–20.0	0.20–1.0	0.05–0.15	1.0	0.5–2.5	1.0 max		0.04	0.03	...											
Ni-Fe-Cr-Co Alloy																								
R30556	19.0–22.5	21.0–23.0	2.5–4.0	Remainder[A]	2.0–3.5	0.05–0.15	0.20–0.80	16.0–21.0	0.50–2.00	...	0.04	0.015	...	...	...	0.10–0.50	0.001–0.10	0.005–0.10	0.10–0.30	0.02 max	0.30 max	0.3–1.25		
Ni-Cr-W-Mo Alloy																								
N06230	Remainder[A]	20.0–24.0	1.0–3.0	3.0 max	13.0–15.0	0.05–0.15	0.25–0.75	5.0 max	0.30–1.00	...	0.03	0.015	...	...	...	0.20–0.50	...	0.005–0.050	...	0.015 max	...	...		

(continued)

TABLE 1
CHEMICAL REQUIREMENTS (CONT'D)

	Composition Limits, %																						
	Ni	Cr	Mo	Fe	W	C	Si, Max	Co	Mn	V	P, Max	S, Max	Ti	Cu	Cb (Nb) + Ta	Al	Zr	La	N	B	Cb (Nb)	Ta	Ni + Mo	Mg
Low C-Ni-Cr-Mo Alloy N06058	Balance	20.0–23.0	19.0–21.0	1.5 max	0.3 max	0.010 max	0.10 max	0.3 max	0.50 max		0.015	0.010	...	0.50 max	...	0.40 max			0.02–0.15					
N06059	Balance	22.0–24.0	15.0–16.5	1.5 max	...	0.010 max	0.10	0.3 max	0.5 max	...	0.015	0.010	...	0.50 max	...	0.1–0.4	...	...	...	...	...	...		
Low C-Ni-Cr-Mo-Cu Alloy N06200	Remainder[A]	22.0–24.0	15.0–17.0	3.00 max	...	0.010 max	0.080	2.00 max	0.50 max	...	0.025	0.010	...	1.3–1.9		0.50 max								
Low C-Ni-Fe-Cr-Mo-Cu Alloy N08031	30.0–32.0	26.0–28.0	6.0–7.0	Balance	...	0.015 max	0.3	...	2.0 max	...	0.020	0.010	...	1.0–1.4	...	...	...	...	0.15–0.25	...	...	...		
Low C-Ni-Cr-Mo-W Alloy N06686	Remainder[A]	19.0–23.0	15.0–17.0	5.0 max	3.0–4.4	0.010 max	0.08	...	0.75 max	...	0.04	0.02	0.02–0.25	...	...	...	...	...	...	...	...	...		
Ni-Co-Cr-Si Alloy N12160	Remainder[A]	26.0–30.0	1.0 max	3.5 max	1.0 max	0.15 max	2.4–3.0	27.0–33.0	1.5 max	...	0.030	0.5	0.20–0.80	...	...	...	...	...	...	...	1.0 max	...	...	
Cr-Ni-Fe-N Alloy R20033	30.0–33.0	31.0–35.0	0.50–2.0	Balance	...	0.015 max	0.50	...	2.0 max	...	0.02	0.01	...	0.30–1.20	...	...	...	...	0.35–0.60	...	...	...	...	...
Low C-Ni-Mo-Cr-Ta Alloy N06210	Remainder[A]	18.0–20.0	18.0–20.0	1.0 max	...	0.015 max	0.08	1.0 max	0.5	0.35 max	0.02	0.02	...		...		...	...	...	...	...	1.5–2.2		

[A] The composition of the remainder element shall be determined arithmetically by difference.

TABLE 2
DIMENSIONS OF WELDED PIPE

Nominal Pipe Size,	Outside Diameter		Nominal Wall Thickness							
			Schedule 5S [Note (1)]		Schedule 10S [Note (1)]		Schedule 40S		Schedule 80S	
in.	in.	mm	in.	mm	in.	mm	in.	mm	in.	mm
1/8	0.405	10.29	...	...	0.049	1.24	0.068	1.73		
1/4	0.540	13.72	...	...	0.065	1.65	0.088	2.24		
3/8	0.675	17.15	...	...	0.065	1.65	0.091	2.31		
1/2	0.840	21.34	0.065	1.65	0.083	2.11	0.109	2.77		
3/4	1.050	26.67	0.065	1.65	0.083	2.11	0.113	2.87		
1.0	1.315	33.41	0.065	1.65	0.109	2.77	0.133	3.38		
1 1/4	1.660	42.16	0.065	1.65	0.109	2.77	0.140	3.56		
1 1/2	1.900	48.26	0.065	1.65	0.109	2.77	0.145	3.68		
2	2.375	60.03	0.065	1.65	0.109	2.77	0.154	3.91	0.218	5.54
2 1/2	2.875	73.03	0.083	2.11	0.120	3.05	0.203	5.16	0.276	7.01
3	3.500	88.90	0.083	2.11	0.120	3.05	0.216	5.33		
3 1/2	4.000	101.60	0.083	2.11	0.120	3.05	0.226	5.74		
4	4.500	114.30	0.083	2.11	0.120	3.05	0.237	6.02		
5	5.563	141.30	0.109	2.77	0.134	3.40	0.258	6.55		
6	6.625	168.28	0.109	2.77	0.134	3.40	0.280	7.11		
8	8.625	219.18	0.109	2.77	0.148	3.76	0.322	8.18		

GENERAL NOTES:
(a) This Table is a partial reprint of Table 1 of ANSI B36.19.
(b) The decimal thickness listed for the respective pipe sizes represents their nominal or average wall dimensions.

NOTE:
(1) Schedules 5S and 10S wall thicknesses do not permit threading in accordance with ANSI B2.1-1960.

both weld and base metal or in weld metal only. The method of cold working may be specified by the purchaser.

6. Chemical Composition

6.1 The material shall conform to the composition limits specified in Table 1.

6.2 If a product (check) analysis is made by the purchaser, the material shall conform to the requirements specified in Table 1 subject to the permissible tolerances in Table 1 of Specification B 775.

7. Mechanical Properties and Other Requirements

7.1 *Tension Test* — The tensile properties of the material at room temperature shall conform to those shown in Table 3.

7.1.1 One tension test shall be made on each lot of pipe.

7.2 *Flattening Test* — One flattening test shall be made on a specimen from one end of one pipe from each lot.

7.3 *Hydrostatic or Nondestructive Electric Test* — Each pipe shall be subjected to either the hydrostatic or the nondestructive electric test at the manufacturer's option.

8. Dimensions and Permissible Variations

8.1 *Wall Thickness* — Variations in wall thickness shall not exceed the specified nominal wall thickness by more than ±12 1/2%, except as follows:

8.1.1 If weld beads are present on the inner surface of the pipe, they shall not exceed the wall thickness of the pipe by more than 20% or 0.050 in. (1.27 mm), whichever is less, of the specified nominal wall thickness for Class I pipe, and 5% or 0.005 in. (0.127 mm), whichever is less, of the specified nominal wall thickness for Class II pipe.

8.1.2 Sunken welds in Class I pipe shall not be deeper than 15% of the specified nominal wall thickness and never deeper than 0.030 in. (0.79 mm). Class II pipe shall not have sunken welds.

8.2 *Outside Diameter* — The permissible variations in outside diameter shall not exceed the limits prescribed in Table 4, except as provided for in 8.1.2.

TABLE 3
MECHANICAL PROPERTIES OF PIPE

Alloy	Tensile Strength, Min., ksi (MPa)	Yield Strength (0.2% Offset), Min., ksi (MPa)	Elongation in 2 in. (50.8 mm) or 4*D*,[A] Min., %
Ni-Mo Alloys			
alloy N10001	100 (690)	45 (310)	40
alloy N10665	110 (760)	51 (350)	40
alloy N10675	110 (760)	51 (350)	40
alloy N10629	110 (760)	51 (350)	40
alloy N10624	104 (720)	46 (320)	40
Ni-Mo-Cr-Fe Alloy			
alloy N10242	105 (725)	45 (310)	40
Low C Ni-Mo-Cr Alloys			
alloy N10276	100 (690)	41 (283)	40
alloy N06022	100 (690)	45 (310)	45
alloy N06455	100 (690)	40 (276)	40
Ni-Cr-Fe-Mo-Cu Alloys			
alloy N06007	90 (621)	35 (241)	35
alloy N06975	85 (586)	32 (221)	40
alloy N06985	90 (621)	35 (241)	45
alloy N06030	85 (586)	35 (241)	30
Ni-Fe-Cr-Mo Alloy (N08320)	75 (517)	28 (193)	35
Ni-Cr-Mo-Fe Alloy (N06002)	100 (690)	40 (276)	35
Ni-Fe-Cr-Co Alloy (R30556)	100 (690)	45 (310)	40
Ni-Cr-W-Mo Alloy (N06230)[B]	110 (760)	45 (310)	40
Low C-Ni-Cr-Mo Alloys			
alloy N06058	110 (760)	52 (360)	40
alloy N06059	100 (690)	45 (310)	45
Low C-Ni-Cr-Mo-Cu Alloy (N06200)	100 (690)	41 (283)	45
Ni-Fe-Cr-Mo-Cu Low Carbon Alloy (N08031)	94 (650)	40 (276)	40
Low C Ni-Cr-Mo-W Alloy (N06686)	100 (690)	45 (310)	45
Ni-Co-Cr-Si Alloy N12160	90 (620)	35 (240)	40
Cr-Ni-Fe-N Low Carbon Alloy (R20033)	109 (750)	55 (380)	40
Low C Ni-Cr-Mo-Ta Alloy (N06210)	100 (690)	45 (310)	45

[A] *D* refers to the diameter of the tension specimen.

[B] Solution annealed at a temperature between 2,200 to 2,275°F (1,204 to 1,246°C) followed by water quench or rapidly cooled by other means.

9. Keywords

9.1 UNS N06002; UNS N06007; UNS N06022; UNS N06030; UNS N06058; UNS N06059; UNS N06200; UNS N06210; UNS N06230; UNS N06455; UNS N06975; UNS N06985; UNS N08031; UNS N08320; UNS N10001; UNS N10242; UNS N10276; UNS N10624; UNS N10629; UNS N10665; UNS N10675; UNS R30556; welded pipe

TABLE 4
PERMISSIBLE VARIATIONS IN OUTSIDE DIAMETER

Nominal Pipe Size, in.	Permissible Variation in Outside Diameter [Note (1)]			
	in.		mm	
1/8	+0.002	−0.006	+0.05	−0.15
1/4	+0.003	−0.008	+0.08	−0.20
3/8	+0.004	−0.008	+0.08	−0.20
1/2	+0.004	−0.010	+0.10	−0.25
3/4	+0.005	−0.012	+0.13	−0.30
1	+0.005	−0.012	+0.13	−0.30
1 1/4	+0.005	−0.012	+0.13	−0.30
1 1/2	+0.008	−0.015	+0.20	−0.38
2	+0.010	−0.016	+0.25	−0.41
2 1/2	+0.010	−0.016	+0.25	−0.41
3	+0.012	−0.018	+0.30	−0.46
3 1/2	+0.012	−0.018	+0.30	−0.46
4	+0.014	−0.020	+0.36	−0.51
5	+0.063	0.031	+1.60	−0.79
6	+0.063	0.031	+1.60	−0.79
8	+0.063	0.031	+1.60	−0.79

NOTE:
(1) The permissible variations in the above Table apply to individual measurements, including out of roundness (ovality).

APPENDIX

(Nonmandatory Information)

X1. HEAT TREATMENT

X1.1 Proper heat treatment during or subsequent to fabrication is necessary for optimum performance, and the manufacturer shall be consulted for details.

SPECIFICATION FOR NICKEL-IRON-CHROMIUM-MOLYBDENUM ALLOY (UNS N08320) PLATE, SHEET, AND STRIP

SB-620

(Identical with ASTM Specification B 620-93.)

1. Scope

1.1 This specification covers rolled nickel-iron-chromium-molybdenum alloy (UNS N08320) plate, sheet, and strip, for use in general corrosive service.

1.2 The following products are covered under this specification:

1.2.1 *Sheet and Strip* — Hot or cold rolled, solution annealed, and descaled unless solution anneal is performed in an atmosphere yielding a bright finish.

1.2.2 *Plate* — Hot rolled, solution annealed, and descaled.

1.3 The values stated in inch-pound units are to be regarded as the standard.

2. Referenced Documents

2.1 *ASTM Standards:*

E 8 Test Methods of Tension Testing of Metallic Materials

E 18 Test Methods for Rockwell Hardness and Rockwell Superficial Hardness of Metallic Materials

E 29 Practice for Using Significant Digits in Test Data to Determine Conformance with Specifications

E 55 Practice for Sampling Wrought Nonferrous Metals and Alloys for Determination of Chemical Composition

E 140 Standard Hardness Conversion Tables for Metals (Relationship Between Brinell Hardness, Vickers Hardness, Rockwell Hardness, Rockwell Superficial Hardness, and Knoop Hardness)

E 354 Test Methods for Chemical Analysis of High-Temperature, Electrical, Magnetic, and Other Similar Iron, Nickel, and Cobalt Alloys

3. Terminology

3.1 *Descriptions of Terms Specific to This Standard:*

3.1.1 *plate* — material $^{3}/_{16}$ in. (4.76 mm) and over in thickness.

3.1.2 *sheet and strip* — material under $^{3}/_{16}$ in. (4.76 mm) in thickness.

4. Ordering Information

4.1 Orders for material under this specification shall include the following information:

4.1.1 *Dimensions* — Thickness (in decimals of an inch), width, and length (inch or fraction of an inch).

4.1.2 *Certification* — State if certification or a report of test results is required (Section 15).

4.1.3 *Optional Requirement:*

4.1.3.1 *Plate* — State how plate is to be cut (see 7.8.1 and Table 6).

4.1.4 *Purchase Inspection* — State which tests or inspections are to be witnessed (Section 13).

4.1.5 *Samples for Product (Check) Analysis* — State whether samples shall be furnished (9.2.2).

5. Chemical Composition

5.1 The material shall conform to the composition limits specified in Table 1.

5.2 If a product (check) analysis is made by the purchaser, the material shall conform to the requirements specified in Table 1 subject to the permissible tolerances in Table 2.

TABLE 1
CHEMICAL REQUIREMENTS

Element	Composition Limits, %
Nickel	25.0–27.0
Iron	remainder[A]
Chromium	21.0–23.0
Molybdenum	4.0–6.0
Manganese, max	2.5
Carbon, max	0.05
Titanium, min	4 × carbon
Silicon, max	1.00
Phosphorus, max	0.04
Sulfur, max	0.03

[A] See 12.1.1.

TABLE 2
PRODUCT (CHECK ANALYSIS TOLERANCES)

Element	Tolerances, over the max or under the min, Specified Limit, %
Nickel	0.25
Chromium	0.25
Molybdenum, under min	0.10
over max	0.15
Manganese	0.04
Carbon	0.01
Titanium	0.02
Silicon	0.05
Phosphorus	0.005
Sulfur	0.005

TABLE 3
MECHANICAL PROPERTY REQUIREMENTS

Tensile Strength min, psi (MPa)	Yield Strength (0.2 % Offset) min, psi (MPa)	Elongation in 2 in. (50.8 mm) or 4D[A] min, %	Rockwell Hardness,[B] max
75 000 (517)	28 000 (193)	35	95 HRB

[A] D refers to the diameter of the tension specimen.
[B] Hardness values are shown for information purposes only and are not to be used as a basis for rejection or acceptance. For approximate hardness conversions, see Hardness Conversion Tables E 140.

6. Mechanical Properties and Other Requirements

6.1 *Tensile Properties* — The material shall conform to the room temperature tensile properties prescribed in Table 3.

6.2 *Hardness* — The hardness values given in Table 3 are informative only.

TABLE 4
PERMISSIBLE VARIATIONS IN THICKNESS OF PLATE[A]

Specified Thickness, in. (mm)	Permissible Variations in Thickness, in. (mm)[B,C] +	−
3/16 to 7/32 (4.76 to 5.56), incl	0.021 (0.53)	0.010 (0.25)
Over 7/32 to 1/4 (5.56 to 6.35), incl	0.024 (0.61)	0.010 (0.25)
Over 1/4 to 3/8 (6.35 to 9.52), incl	0.027 (0.69)	0.010 (0.25)
Over 3/8 to 1/2 (9.52 to 12.70), incl	0.030 (0.76)	0.010 (0.25)
Over 1/2 to 5/8 (12.70 to 15.88), incl	0.035 (0.89)	0.010 (0.25)
Over 5/8 to 3/4 (15.88 to 19.05), incl	0.040 (1.02)	0.010 (0.25)
Over 3/4 to 7/8 (19.05 to 22.22), incl	0.045 (1.14)	0.010 (0.25)
Over 7/8 to 1 (22.22 to 25.4), incl	0.050 (1.27)	0.010 (0.25)
Over 1 to 2 1/2 (25.4 to 63.5), incl	5[D]	0.010 (0.25)

[A] Applicable to plate 48 in. (1.22 m) and under in width.
[B] Measured 3/8 in. (9.52 mm) or more from any edge.
[C] Buffing or grinding for removal of light surface imperfections shall be permitted. The depth of such buffed or ground areas shall not exceed the minimum tolerance thickness.
[D] Expressed as percentage of thickness.

7. Dimensions, Mass, and Permissible Variations

7.1 *Weight* — The material covered by this specification shall be assumed to weigh 0.291 lb/in.^{3} (8.05g/cm^3).

7.2 *Thickness:*

7.2.1 *Plate* — The permissible variations in thickness of plate shall be as prescribed in Table 4.

7.2.2 *Sheet and Strip* — The permissible variations in thickness of sheet and strip shall be as prescribed in Table 5. The thickness shall be measured with the micrometer spindle 3/8 in. (9.525 mm) or more from any edge for material 1 in. (25.4 mm) or over in width and at any place on material under 1 in. in width.

7.3 *Width:*

7.3.1 *Plate* — The permissible variations in width of rectangular plates shall be as prescribed in Table 6.

7.3.2 *Sheet and Strip* — The permissible variations in width for sheet and strip shall be as prescribed in Table 7.

TABLE 5
PERMISSIBLE VARIATIONS IN THICKNESS OF SHEET[A] AND STRIP

Specified Thickness, in. (mm)	Permissible Variations in Thickness, in[B,C] (mm) (All Widths)	
	+	−
0.020 to 0.034 (0.51 to 0.86), incl	0.004 (0.10)	0.004 (0.10)
Over 0.034 to 0.056 (0.86 to 1.42), incl	0.005 (0.13)	0.005 (0.13)
Over 0.056 to 0.070 (1.42 to 1.78), incl	0.006 (0.15)	0.006 (0.15)
Over 0.070 to 0.078 (1.78 to 1.98), incl	0.007 (0.18)	0.007 (0.18)
Over 0.078 to 0.093 (1.98 to 2.36), incl	0.008 (0.20)	0.008 (0.20)
Over 0.093 to 0.109 (2.36 to 2.77), incl	0.009 (0.23)	0.009 (0.23)
Over 0.109 to 0.125 (2.77 to 3.18), incl	0.010 (0.25)	0.010 (0.25)
Over 0.125 to 0.140 (3.18 to 3.56), incl	0.013 (0.33)	0.010 (0.25)
Over 0.140 to 0.171 (3.56 to 4.34), incl	0.016 (0.41)	0.010 (0.25)
Over 0.171 to 0.187 (4.34 to 4.75), incl	0.018 (0.46)	0.010 (0.25)

[A] Applicable to sheet 48 in. (1.22 m) and under in width.
[B] Measured 3/8 in. (9.52 mm) or more from any edge.
[C] Buffing for removal of light surface imperfections shall be permitted. The depth of such buffed areas shall not exceed the permissible minus variation.

7.4 *Length:*

7.4.1 *Plate* — Permissible variations in the length of rectangular plate shall be as prescribed in Table 6.

7.4.2 *Sheet and Strip* — Sheet and strip may be ordered to cut lengths, in which case a variation of 1/8 in. (3.175 mm) over the specified length shall be permitted with a zero minus tolerance.

7.5 *Straightness:*

7.5.1 The edgewise curvature (depth of cord) of flat sheet, strip, and plate shall not exceed 0.05 in. multiplied by the length in feet or 0.04 mm multiplied by the length in centimeters.

7.5.2 Straightness for coiled strip is subject to agreement between the manufacturer and the purchaser.

7.6 *Squareness* (Sheet) — For sheets of all thicknesses and widths of 6 in. (152.4 mm) or more, the angle between adjacent sides shall be 90 ± 0.15 deg. (1/16 in./24 in. or 2.6 mm/m).

7.7 *Flatness* — Plate, sheet, and strip shall be commercially flat.

TABLE 6
PERMISSIBLE VARIATIONS IN WIDTH AND LENGTH OF SHEARED, PLASMA-TORCH-CUT, OR ABRASIVE CUT RECTANGULAR PLATE

	Permissible Variations in Widths and Lengths for Dimensions Given, in. (mm)			
	Up to 30 (760), incl		Over 30 (760), incl	
Specified Thickness	+	−	+	−
Inches				
Sheared:				
3/16 to 5/16, incl	3/16	1/8	1/4	1/8
Over 5/16 to 1/2, excl	1/4	1/8	3/8	1/8
Abrasive cut:				
3/16 to 1 1/2, incl	1/16	1/16	1/16	1/16
Over 1 1/2 to 2 1/2, incl	1/8	1/8	1/8	1/8
Plasma-Torch-Cut:[A]				
3/16 to 2, excl	1/2	0	1/2	0
2 to 3, incl	5/8	0	5/8	0
Millimetres				
Sheared:				
4.76 to 7.94, incl	4.76	3.18	6.35	3.18
Over 7.94 to 12.70, incl	6.35	3.18	9.52	3.18
Abrasive cut:				
4.76 to 38.1, incl	1.59	1.59	1.59	1.59
Over 38.1 to 63.5, incl	3.18	3.18	3.18	3.18
Plasma-Torch-Cut:[A]				
4.8 to 50.8, excl	12.7	0	12.7	0
50.8 to 76.2, incl	15.9	0	15.9	0

[A] The tolerance spread shown for plasma-torch-cutting may be obtained all on the minus side, or divided between the plus and the minus side if so specified by the purchaser.

7.8 *Edges:*

7.8.1 Plate shall have sheared or abrasive cut or plasma-torch-cut edges as specified.

7.8.2 Sheet and strip shall have sheared or slit edges.

8. Workmanship, Finish, and Appearance

8.1 The material shall be uniform in quality and condition, smooth, and free of injurious imperfections.

9. Sampling

9.1 *Lots for Chemical Analysis and Mechanical Testing:*

9.1.1 A lot for chemical analysis shall consist of one heat.

TABLE 7
PERMISSIBLE VARIATIONS IN WIDTH OF SHEET AND STRIP

Specified Thickness, in. (mm)	Specified Width, in. (mm)	Permissible Variations in Specified Width, in. (mm) Plus	Minus
	Sheet		
0.187 (4.76) and under	2 (50.8) and over	0.125 (3.18)	0
Strip (Slit Edges)			
Over 0.020 to 0.075 (0.51 to 1.90), incl	24 (610) and under	0.007 (0.18)	0.007 (0.18)
Over 0.075 to 0.100 (1.90 to 2.54), incl	24 (610) and under	0.009 (0.23)	0.009 (0.23)
Over 0.100 to 0.125 (2.54 to 3.18), incl	24 (610) and under	0.012 (0.30)	0.012 (0.30)

9.1.2 A lot of plate, sheet, or strip for mechanical testing shall be defined as the material from one heat in the same condition and specified thickness.

9.2 *Sampling for Chemical Analysis:*

9.2.1 A representative sample shall be obtained from each heat during pouring or subsequent processing.

9.2.2 Product (check) analysis shall be wholly the responsibility of the purchaser.

9.3 *Sampling for Mechanical Testing:*

9.3.1 Representative samples shall be taken from each lot of finished material.

10. Number of Tests and Retests

10.1 *Chemical Analysis* — One test per heat.

10.2 *Tension Tests* — One test per lot.

10.3 *Retests* — If the specimen used in the mechanical test of any lot fails to meet the specified requirements, two additional specimens shall be taken from different sample pieces and tested. The results of the tests on both of these specimens shall meet the specified requirements.

11. Specimen Preparation

11.1 Tension test specimens shall be taken from material in the final condition and tested transverse to the direction of rolling when width will permit.

11.2 Tension test specimens shall be any of the standard or subsize specimens shown in Test Methods E 8.

11.3 In the event of disagreement, referee specimens shall be as follows:

11.3.1 Full thickness of the material, machined to the form and dimensions shown for the sheet-type specimen in Test Method E 8 for material under $\frac{1}{2}$ in. (12.7 mm) in thickness.

11.3.2 The largest possible round specimen shown in Test Methods E 8 for material $\frac{1}{2}$ in. (12.7 mm) and over.

12. Test Methods

12.1 The chemical composition and mechanical properties of the material as enumerated in this specification shall be determined, in case of disagreement, in accordance with the following ASTM methods:

12.1.1 *Chemical Analysis* — Test Methods E 354. For elements not covered by Test Methods E 354, the referee method shall be as agreed upon between the manufacturer and the purchaser. The iron composition shall be determined arithmetically by difference.

12.1.2 *Tension Test* — Test Methods E 8.

12.1.3 *Rockwell Hardness Test* — Test Methods E 18.

12.1.4 *Hardness Conversion* — Hardness Conversion Tables E 140.

12.1.5 *Determining Significant Places* — Practice E 29.

12.1.6 *Method of Sampling* — Practice E 55.

12.2 For purposes of determining compliance with the limits in this specification, an observed value or a calculated value shall be rounded in accordance with the rounding method of Practice E 29.

Requirements	Rounded unit for observed or calculated value
Chemical composition and tolerances	nearest unit in the last right-hand place of figures of the specified limit
Tensile strength and yield strength	nearest 1000 psi (7 MPa)
Elongation	nearest 1%

13. Inspection

13.1 Inspection of the material by the purchaser at the place of manufacture shall be made as agreed upon between the purchaser and the manufacturer as part of the purchase contract.

14. Rejection and Rehearing

14.1 Material tested by the purchaser that fails to conform to the requirements of this specification may be rejected. Rejection should be reported to the producer or supplier promptly and in writing. In case of dissatisfaction with the results of the test, the producer or supplier may make claim for a rehearing.

15. Certification

15.1 When specified in the purchase order or contract, a manufacturer's certification shall be furnished to the purchaser stating that material has been manufactured, tested, and inspected in accordance with this specification, and that the test results on representative samples meet specification requirements. When specified in the purchase order or contract, a report of the test results shall be furnished.

16. Product Marking

16.1 Each plate, sheet, or strip shall be marked on one face with the specification number, alloy, heat number, manufacturer's identification, and size. The markings shall have no deleterious effect on the material or its performance and shall be sufficiently stable to withstand normal handling.

16.2 Each bundle or shipping container shall be marked with the name of the material; this specification number; alloy; the size; gross, tare, and net weight; consignor and consignee address; contract or order number; and such other information as may be defined in the contract or order.

APPENDIX

(Nonmandatory Information)

X1. HEAT TREATMENT

X1.1 Proper heat treatment during or subsequent to fabrication is necessary for optimum performance, and the manufacturer shall be consulted for details.

SPECIFICATION FOR NICKEL-IRON-CHROMIUM-MOLYBDENUM ALLOY (UNS N08320) ROD

SB-621

(Identical with ASTM Specification B 621-95)

1. Scope

1.1 This specification covers nickel-iron chromium-molybdenum alloy (UNS N08320) rod for use in general corrosive service.

1.2 The following products are covered under this specification:

1.2.1 rods $^{5}/_{16}$ to $^{3}/_{4}$ in. (7.94 to 19.05 mm) excl in diameter, hot or cold finished, solution annealed, and pickled or mechanically descaled; and

1.2.2 rods $^{3}/_{4}$ to $3^{1}/_{2}$ in. (19.05 to 88.9 mm) incl in diameter, hot or cold finished, solution annealed, ground, or turned.

1.3 The values stated in inch-pound units are to be regarded as the standard.

2. Referenced Documents

2.1 *ASTM Standards*

E 8 Test Methods for Tension Testing of Metallic Materials

E 29 Practice for Using Significant Digits in Test Data to Determine Conformance With Specifications

E 55 Practice for Sampling Wrought Nonferrous Metals and Alloys for Determination of Chemical Composition

E 1473 Test Methods for Chemical Analysis of Nickel, Cobalt, and High-Temperature Alloys

3. Terminology

3.1 *Description of Term Specific to This Standard:*

3.1.1 *rod* — a product of round solid section furnished in straight lengths

4. Ordering Information

4.1 Orders for material under this specification should include the following information:

4.1.1 *Dimensions* — nominal diameter and length. The shortest useable multiple length shall be specified (Table 5).

4.1.2 *Certification* — State if certification or a report of test results is required (Section 15).

4.1.3 Purchaser Inspection — State which tests or inspections are to be witnessed (Section 13).

4.1.4 *Samples for Product (Check) Analysis* — State whether samples shall be furnished (9.2.2).

5. Chemical Composition

5.1 The material shall conform to the composition limits specified in Table 1.

5.2 If a product (check) analysis is made by the purchaser, the material shall conform to the requirements

TABLE 1
CHEMICAL REQUIREMENTS

Element	Composition Limits, %
Nickel	25.0–27.0
Iron	Remainder [Note (1)]
Chromium	21.0–23.0
Molybdenum	4.0–6.0
Manganese, max	2.5
Carbon, max	0.05
Titanium, min.	4 × carbon
Silicon, max	1.00
Phosphorus, max	0.04
Sulfur, max	0.03

NOTE:
(1) See 12.1.1.

TABLE 2
PRODUCT (CHECK) ANALYSIS TOLERANCES

Element	Tolerances, Over the Max or Under the Min., Specified Limit, %
Nickel	0.25
Chromium	0.25
Molybdenum, under min.	0.10
Over max	0.15
Manganese	0.04
Carbon	0.01
Titanium	0.02
Silicon	0.05
Phosphorus	0.005
Sulfur	0.005

TABLE 3
MECHANICAL PROPERTY REQUIREMENTS

Tensile Strength, Min., psi (MPa)	Yield Strength (0.2% Offset), Min., psi (MPa)	Elongation in 2 in. (50.8) or 4*D*, [Note (1)], Min., %
75,000 (517)	28,000 (193)	35

NOTE:
(1) *D* refers to the diameter of the tension specimen.

specified in Table 1 subject to the permissible tolerances in Table 2.

6. Mechanical Properties and Other Requirements

6.1 The mechanical properties of the material at room temperature shall conform to those shown in Table 3.

7. Dimensions, Mass, and Permissible Variations

7.1 *Diameter* — The permissible variations from the specified diameter shall be as prescribed in Table 4.

7.2 *Out of Roundness* — The permissible variation in roundness shall be as prescribed in Table 4.

7.3 *Matching Allowances* — When the surfaces of finished material are to be machined, the following allowances are suggested for normal machining operations.

7.3.1 *As-Finished (Annealed and Descaled)* — For diameters of $^{5}/_{16}$ to $^{11}/_{16}$ in. (7.94 to 17.46 mm) incl, an allowance of $^{1}/_{16}$ in. (1.59 mm) on the diameter should be made for finish machining.

7.4 *Length*

7.4.1 Unless multiple, nominal, or cut lengths are specified, random mill lengths shall be furnished.

7.4.2 The permissible variations in length of multiple, nominal, or cut length rod shall be as prescribed in Table 5. Where rods are ordered in multiple lengths, an additional $^{1}/_{4}$ in. (6.35 mm) in length shall be allowed for each uncut multiple length.

7.5 *Ends*

7.5.1 Rods ordered to random or nominal lengths shall be furnished with either cropped or sawed ends.

7.5.2 Rods ordered to cut lengths shall be furnished with square saw cut or machined ends.

7.6 *Weight* — The material covered by this specification shall be assumed to weigh 0.291 lb/in.^{3} (8.05 g/cm^3).

7.7 *Straightness* — The maximum curvature (depth of cord) shall not exceed 0.050 in. multiplied by the length of the cord in feet (0.04 mm multiplied by the length in centimetres).

8. Workmanship, Finish, and Appearance

8.1 The material shall be uniform in quality and condition, smooth, and free of injurious imperfections.

9. Sampling

9.1 *Lots for Chemical Analysis and Mechanical Testing*

9.1.1 A lot for chemical analysis shall consist of one heat.

9.1.2 A lot of bar for mechanical testing shall be defined as the material from one heat in the same condition and specified diameter.

9.2 *Sampling for Chemical Analysis*

9.2.1 A representative sample shall be obtained from each heat during pouring or subsequent processing.

9.2.2 Product (check) analysis shall be wholly the responsibility of the purchaser.

9.3 *Sampling for Mechanical Testing*

9.3.1 A representative sample shall be taken from each lot of finished material.

10. Number of Tests and Retests

10.1 *Chemical Analysis* — one test per heat;

10.2 *Tension Tests* — one test per lot; and

10.3 *Retests* — If the specimen used in the mechanical test of any lot fails to meet the specified requirements, two additional specimens shall be taken from different

TABLE 4
PERMISSIBLE VARIATIONS IN DIAMETER AND OUT-OF-ROUNDNESS OF FINISHED RODS

Specified Dia, in. (mm)	Permissible Variations, in. (mm)		
	Dia		Out of Roundness, Max
	Plus	Minus	
Hot-Finished, Annealed, and Descaled Rods			
5/16 to 7/16 (7.94–11.11) incl	0.012 (0.30)	0.012 (0.30)	0.018 (0.46)
Over 7/16 to 5/8 (11.11–15.87) incl	0.014 (0.36)	0.014 (0.36)	0.020 (0.51)
Over 5/8 to 3/4 (15.87–19.05) excl	0.016 (0.41)	0.016 (0.41)	0.024 (0.61)
Hot-Finished, Annealed, and Ground or Turned Rods			
3/4 to 3 1/2 (19.05–88.9) incl	0.010 (0.25)	0	0.008 (0.20)

TABLE 5
PERMISSIBLE VARIATIONS IN LENGTH OF RODS

Random mill lengths	2 to 12 ft (610 to 3,660 mm) long with not more than 25 weight % under 4 ft (1.22 m).
Multiple lengths	Furnished in multiples of a specified unit length within the length limits indicated above. For each multiple, an allowance of 1/4 in. (6.35 mm) shall be made for cutting, unless otherwise specified. At the manufacturer's option, individual specified unit lengths may be furnished.
Nominal lengths	Specified nominal lengths having a range of not less than 2 ft (610 mm) with no short lengths allowed.
Cut lengths	A specified length to which all rods shall be cut with a permissible variation of + 1/8 in. (3.17 mm) − 0.

sample pieces and tested. The results of the tests on both of these specimens shall meet the specified requirements.

11. Specimen Preparation

11.1 Tension test specimens shall be taken from material after final heat treatment and tested in the direction of fabrication.

11.2 Tension test specimens shall be any of the standard or subsized specimens shown in Test Methods E 8.

11.3 In the event of a disagreement, the referee specimen shall be the largest possible round specimen shown in Test Methods E 8.

12. Test Methods

12.1 The chemical composition and mechanical properties of the material as enumerated in this specification shall be determined, in case of disagreement, in accordance with the following ASTM methods:

12.1.1 *Chemical Analysis* — Test Methods E 1473. The iron composition shall be determined arithmetically by difference;

12.1.2 *Tension Test* — Test Methods E 8;

12.1.3 *Method of Sampling* — Practice E 55; and

12.1.4 *Determining Significant Places* — Practice E 29.

12.2 For purposes of determining compliance with the limits in this specification, an observed value or a calculated value shall be rounded in accordance with the rounding method of Practice of E 29.

Requirements	Rounded Unit for Observed or Calculated Value
Chemical composition and tolerance	Nearest unit in the last right-hand place of figures of the specified limit
Tensile strength and yield strength	Nearest 1,000 psi (7 MPa)
Elongation	Nearest 1%

13. Inspection

13.1 Inspection of the material shall be made as agreed upon by the manufacturer and the purchaser as part of the purchase contract.

14. Rejection and Rehearing

14.1 Material tested by the purchaser that fails to conform to the requirements of this specification may be rejected. Rejection should be reported to the producer or supplier promptly and in writing. In case of dissatisfaction with the results of the test, the producer or supplier may make claim for a rehearing.

15. Certification

15.1 When specified in the purchase order or contract, a manufacturer's certification shall be furnished to the purchaser stating that material has been manufactured, tested, and inspected in accordance with this specification, and that the test results on representative samples meet specification requirements. When specified in the purchase order or contract, a report of the test results shall be made.

16. Product Marking

16.1 Each piece of material ½ in. (12.7 mm) or over in diameter shall be marked with the specification number, alloy, heat number, manufacturer's identification, and size. The markings shall have no deleterious effect on the material or its performance and shall be sufficiently stable to withstand normal handling.

16.2 Each bundle or shipping container shall be marked with the name of the material; this specification number; alloy; the size; gross, tare, and net weight; consignor and consignee address; contract or order number; and such other information as may be defined in the contract or order.

17. Keywords

17.1 N08320; rod

APPENDIX

(Nonmandatory Information)

X1. HEAT TREATMENT

X1.1 Proper heat treatment during or subsequent to fabrication is necessary for optimum performance, and the manufacturer shall be consulted for details.

SPECIFICATION FOR SEAMLESS NICKEL AND NICKEL-COBALT ALLOY PIPE AND TUBE

SB-622

(Identical with ASTM Specification B 622-00 except that certification has been made mandatory in para. 4.1.4 and Section 16. Table 1 has been corrected and editorial changes made.)

1. Scope

1.1 This specification covers seamless pipe and tube of nickel and nickel-cobalt alloys (UNS N10001, UNS N10242, UNS N10665, UNS N12160, UNS N10675, UNS N10276, UNS N06455, UNS N06007, UNS N08320, UNS N06975, UNS N06002, UNS N06985, UNS N06022, UNS N08135, UNS N06255, UNS, N06058, UNS N06059, UNS N06200, UNS N06030, UNS N08031, UNS R30556, UNS N08535, UNS N06250, UNS N06060, UNS N06230, UNS N06686, UNS N10629, UNS N06210, UNS N10624, and UNS R20033) as shown in Table 1.

1.2 Pipe and tube shall be supplied in the solution annealed and descaled condition. When atmosphere control is used, descaling is not necessary.

1.3 The values stated in inch-pound units are to be regarded as the standard. The values given in parentheses are for information only.

2. Referenced Documents

2.1 *ASTM Standards:*

B 880 Specification for General Requirements for Chemical Check Analysis Limits for Nickel, Nickel Alloys, and Cobalt Alloys

E 8 Test Methods for Tension Testing of Metallic Materials

E 29 Practice for Using Significant Digits in Test Data to Determine Conformance With Specifications

E 55 Practice for Sampling Wrought Nonferrous Metals and Alloys for Determination of Chemical Composition

E 1473 Test Methods for Chemical Analysis of Nickel, Cobalt, and High-Temperature Alloys

3. Terminology

3.1 *Definitions:*

3.1.1 *average diameter* — the average of the maximum and minimum outside diameters, or the maximum and minimum inside diameters, as determined at any cross-section of the tube.

3.1.2 *pipe* — seamless tube conforming to the particular dimensions commercially known as standard pipe sizes (Appendix X2).

3.1.3 *tube* — a hollow product of round or any other cross-section having a continuous periphery.

4. Ordering Information

4.1 It is the responsibility of the purchaser to specify all requirements that are necessary for the safe and satisfactory performance of material ordered under this specification. Examples of such requirements include, but are not limited to, the following:

4.1.1 Alloy (see Table 1);

4.1.2 *Dimensions:*

4.1.2.1 *Tube* — Outside diameter, minimum or average wall thickness, and length;

4.1.2.2 *Pipe* — Standard pipe size and schedule (Appendix X2);

4.1.3 *Ends* — Plain ends cut and deburred will be furnished;

4.1.4 *Certification* — Certification and a report of test results are required (Section 16).

4.1.5 *Samples for Check Analysis* — State whether samples for check analysis should be furnished (10.2.2).

4.1.6 *Purchaser Inspection* — If the purchaser wishes to witness tests or inspection of material at the

TABLE 1
CHEMICAL REQUIREMENTS

	Composition Limits, %																						
	Ni	Cr	Mo	Fe	W	C	Si max.	Co	Mn	V	P max.	S max.	Ti	Cu	Cb (Nb) + Ta	Al	Zr	La	N	B	Cb (Nb)	Ta	Ni + Mo	Mg
Ni-Mo Alloys																								
N10001	Rem.[A]	1.0, max.	26.0–30.0	4.0–6.0	...	0.05, max.	1.0	2.5, max.	1.0, max.	0.2–0.4	0.04	0.03	...	...	...	...	...	...	...	...	...	...	...	...
N10665	Rem.[A]	1.0, max.	26.0–30.0	2.0, max.	...	0.02, max.	0.10	1.0, max.	1.0, max.	...	0.04	0.03	...	...	...	...	...	...	...	...	...	...	...	...
N10675	65.0, min.	1.0–3.0	27.0–32.0	1.0–3.0	3.0, max.	0.01, max.	0.10	3.0, max.	3.0, max.	0.20, max.	0.030	0.010	0.2, max.	0.20, max.	...	0.50, max.	0.10, max.	...	...	...	0.20, max.	0.20, max.	94.0–98.0	...
N10629	Rem.[A]	0.5–1.5	26.0–30.0	1.0–6.0	...	0.01, max.	0.05	2.5, max.	1.5, max.	...	0.04	0.01	...	0.5, max.	...	0.1–0.5	...	...	...	...	...	...	...	...
N10624	Rem.[A]	6.0–10.0	21.0–25.0	5.0–8.0	...	0.01, max.	0.10	1.0, max.	1.0, max.	...	0.025	0.01	...	0.5, max.	...	...	...	...	...	...	...	...	...	...
Ni-Mo-Cr-Fe Alloy																								
N10242	Rem.[A]	7.0–9.0	24.0–26.0	2.0, max.	...	0.03, max.	0.80	1.00, max.	0.80, max.	...	0.030	0.015	...	0.50, max.	...	0.50, max.	...	...	...	0.006, max.	...	...	...	...
Low C Ni-Mo-Cr Alloys																								
N10276	Rem.[A]	14.5–16.5	15.0–17.0	4.0–7.0	3.0–4.5	0.010, max.	0.08	2.5, max.	1.0, max.	0.35, max.	0.04	0.03	...	...	...	...	...	...	...	...	...	...	...	...
N06022	Rem.[A]	20.0–22.5	12.5–14.5	2.0–6.0	2.5–3.5	0.015, max.	0.08	2.5, max.	0.5, max.	0.35, max.	0.02	0.02	...	...	...	...	...	...	...	...	...	...	...	...
N06455	Rem.[A]	14.0–18.0	14.0–17.0	3.0, max.	...	0.015, max.	0.08	2.0, max.	1.0, max.	...	0.04	0.03	0.70, max.	...	...		...		...		...		...	...
Ni-Cr-Fe-Mo-Cu Alloys																								
N06007	Rem.[A]	21.0–23.5	5.5–7.5	18.0–21.0	1.0, max.	0.05, max.	1.0	2.5, max.	1.0–2.0	...	0.04	0.03	...	1.5–2.5	1.75–2.5	...	...	...	...	...	...	...	...	...
N06975	47.0–52.0	23.0–26.0	5.0–7.0	Rem.[A]	...	0.03, max.	1.0	...	1.0, max.	...	0.03	0.03	0.70–1.50	0.70–1.20	...	...	...	...	...	...	...	...	...	...
N06985	Rem.[A]	21.0–23.5	6.0–8.0	18.0–21.0	1.5, max.	0.015, max.	1.0	5.0, max.	1.0, max.	...	0.04	0.03	...	1.5–2.5	0.50, max.	...	...	...	...	...	...	...	...	...
N06030	Rem.[A]	28.0–31.5	4.0–6.0	13.0–17.0	1.5–4.0	0.03, max.	0.8	5.0, max.	1.5, max.	...	0.04	0.02	...	1.0–2.4	0.30–1.50	...	...	...	...	...	...	...	...	...
N06255	47.0–52.0	23.0–26.0	6.0–9.0	Rem.[A]	3.0, max.	0.03, max.	1.0	...	1.0, max.	...	0.03	0.03	0.69, max.	1.2, max.	...	...	...	...	...	...	...	...	...	...
N06250	50.0–54.0	20.0–23.0	10.1–12.0	Rem.[A]	0.25–1.25	0.020, max.	0.09	...	1.00, max.	...	0.030	0.005	...	0.25–1.25	...	...	...	...	...	...	...	...	...	...
Ni-Fe-Cr-Mo Alloys																								
N08320	25.0–27.0	21.0–23.0	4.0–6.0	Rem.[A]	...	0.05, max.	1.0	...	2.5, max.	...	0.04	0.03	4 × C min.	...	...	...	...	...	...	...	...	...	...	...
N08135	33.0–38.0	20.5–23.5	4.0–5.0	Rem.[A]	0.20–0.80	0.030, max.	0.75	...	1.00, max.	...	0.03	0.03	...	0.70, max.	...	...	...	...	...	...	...	...	...	...
N06002	Rem.[A]	20.5–23.0	8.0–10.0	17.0–20.0	0.20–1.0	0.05–0.15	1.0	0.5–2.5	1.0, max.	...	0.04	0.03	...	...	...	...	...	...	...	...	...	...	...	...
N06060	54.0–60.0	19.0–22.0	12.0–14.0	Rem.[A]	0.25–1.25	0.03, max.	0.50	...	1.50, max.	...	0.030	0.005	...	0.25–1.25	0.50–1.25	...	...	...	...	...	...	...	...	...

GENERAL NOTE: Rem. = Remainder

[A] See 13.1.1.

(continued)

TABLE 1
CHEMICAL REQUIREMENTS (CONT'D)

	Composition Limits, %																						
	Ni	Cr	Mo	Fe	W	C	Si max.	Co	Mn	V	P max.	S max.	Ti	Cu	Cb (Nb) + Ta	Al	Zr	La	N	B	Cb (Nb)	Ta	Ni + Mo	Mg
Ni-Fe-Cr-Co Alloy R30556	19.0–22.5	21.0–23.0	2.5–4.0	Rem.[A]	2.0–3.5	0.05–0.15	0.20–0.80	16.0–21.0	0.50–2.00	...	0.04	0.015	...	...	...	0.10–0.50	0.001–0.10	0.005–0.10	0.10–0.30	0.02 max.	0.30, max.	0.3–1.25	...	...
Ni-Cr-W-Mo Alloy N06230	Rem.[A]	20.0–24.0	1.0–3.0	3.0, max.	13.0–15.0	0.05–0.15	0.25–0.75	5.0, max.	0.30–1.00	...	0.03	0.015	...	...	...	0.20–0.50	...	0.005–0.050	...	0.015, max.	...	...	...	...
Low C Ni-Cr-Mo N06058	Balance	20.0–23.0	19.0–21.0	1.5, max.	0.3, max.	0.010, max.	0.10	0.3, max.	0.50, max.	...	0.015	0.010	...	0.50, max.	...	0.40, max.	...	...	0.02–0.15	...	...	...	...	...
N06059	Balance	22.0–24.0	15.0–16.5	1.5, max.	...	0.010, max.	0.10	0.3, max.	0.50, max.	...	0.015	0.010	...	0.50, max.	...	0.1–0.4	...	...	...	...	...	...	...	...
Low C Ni-Cr-Mo-Cu Alloy N06200	Rem.[A]	22.0–24.0	15.0–17.0	3.0, max.	...	0.010, max.	0.08	2.0, max.	0.50, max.	...	0.025	0.010	...	1.3–1.9	...	0.50, max.	...	...	...	...	...	...	...	...
Low C Ni-Fe-Cr-Mo-Cu Alloys N08031	30.0–32.0	26.0–28.0	6.0–7.0	Balance	...	0.015, max.	0.3	...	2.0, max.	...	0.020	0.010	...	1.0–1.4	...	...	...	...	0.15–0.25	...	...	...	...	...
N08535	29.0–36.5	24.0–27.0	2.5–4.0	Rem.[A]	...	0.03, max.	0.50	...	1.0, max.	...	0.03	0.03	...	1.50, max.	...	...	...	...	...	...	...	...	...	...
Low C Ni-Cr-Mo-W Alloy N06686	Rem.[A]	19.0–23.0	15.0–17.0	5.0, max.	3.0–4.4	0.010, max.	0.08	...	0.75, max.	...	0.04	0.02	0.02–0.25	...	...	...	...	...	...	...	...	...	...	...
Ni-Co-Cr-Si Alloy N12160	Rem.[A]	26.0–30.0	1.0, max.	3.5, max.	1.0, max.	0.15, max.	2.4–3.0	27.0–33.0	1.5, max.	...	0.030	0.015	0.20–0.80	...	...	...	...	...	...	...	1.0, max.	...	...	...
Cr-Ni-Fe-N Alloy R20033	30.0–33.0	31.0–35.0	0.50–2.0	Balance	...	0.015, max.	0.50	...	2.0, max.	...	0.02	0.01	...	0.3–1.20	...	...	...	...	0.35–0.60	...	...	...	...	...
Low C Ni-Mo-Cr-Ta Alloy N06210	Rem.[A]	18.0–20.0	18.0–20.0	1.0, max.	...	0.015, max.	0.08	1.0, max.	0.5	0.35, max.	0.02	0.02	...	...	...	...	...	...	...	...	...	1.5–2.2	...	...

GENERAL NOTE: Rem. = Remainder

[A] See 13.1.1.

place of manufacture, the purchase order must so state, indicating which tests or inspections are to be witnessed (Section 14).

5. Chemical Composition

5.1 The material shall conform to the composition limits specified in Table 1.

5.2 If a product (check) analysis is made by the purchaser, the material shall conform to the requirements specified in Table 1 subject to the permissible tolerances per B 880.

6. Mechanical Properties

6.1 The mechanical properties of the material at room temperature shall conform to those shown in Table 2.

7. Hydrostatic Test

7.1 Each pipe or tube shall be tested by the manufacturer to an internal hydrostatic pressure, not to exceed 1000 psi (6.89 MPa), that will produce a fiber stress, S, in the tube wall, calculated in accordance with the following equation:

$$P = 2St/D$$

where:

P = hydrostatic test pressure, psi (MPa),
S = allowable fiber stress of material in the condition furnished, as follows:

Alloy	S psi	S MPa
Nickel-molybdenum:		
UNS N10001	25,000	172
UNS N10665	27,500	190
UNS N10675	27,500	190
UNS N10629	27,500	190
UNS N10624	26,000	180
Nickel-molybdenum-chromium-iron:		
UNS N10242	26,500	182
Low carbon nickel-molybdenum-chromium:		
UNS N10276	25,000	172
UNS N06022	25,000	172
UNS N06455	25,000	172
Nickel-chromium-iron-molybdenum-copper:		
UNS N06007	22,000	152
UNS N06975	21,000	145
UNS N06985	22,500	155
UNS N06030	21,000	145
UNS N06255	21,000	145
UNS N06250	22,500	155
Nickel-iron-chromium-molybdenum:		
UNS N08320	18,500	127
UNS N08135	18,300	126
Nickel-chromium-molybdenum-iron:		
UNS N06002	23,000	159
UNS N06060	22,500	155
Nickel-iron-chromium-cobalt:		
UNS R30556	25,000	172
Nickel-chromium-tungsten-molybdenum:		
UNS N06230	27,500	190
Low carbon-nickel-chromium-molybdenum:		
UNS N06058	27,500	190
UNS N06059	25,000	172
UNS N06200	25,000	172
Low carbon nickel-iron-chromium-molybdenum-copper:		
UNS N08031	22,500	155
UNS N08535	18,300	126
Low carbon-nickel-chromium molybdenum-tungsten:		
UNS N06686	25,000	172
Nickel-cobalt-chromium-silicon:		
UNS N12160	22,500	155
Chromium-nickel-iron-nitrogen:		
UNS R20033	27,000	186
Low carbon nickel-molybdenum-chromium-tantalum		
UNS N06210	25,000	172

t = minimum wall thickness, in. (mm), equal to the specified average wall minus the permissible "minus" wall tolerance (Table 3) or the specified minimum wall thickness, and
D = outside diameter of the tube, in. (mm).

7.2 Any pipe or tube showing leaks during the hydrostatic test shall be rejected.

8. Dimensions and Permissible Variations

8.1 *Outside Diameter and Wall Thickness* — The permissible variations in the outside diameter and wall thickness of pipe and tube shall not exceed those prescribed in Table 3.

8.2 *Length* — When pipe or tube is ordered cut-to-length, the length shall not be less than that specified, but a variation of $+\frac{1}{8}$ in. (3.2 mm) shall be permitted, except that for lengths over 30 ft (9.1 m), a variation of $+\frac{1}{4}$ in. (6.4 mm) shall be permitted.

8.3 *Straightness* — Material shall be reasonably straight and free of bends or kinks.

8.4 *Weight* — For calculation of mass or weight, the following densities shall be used:

TABLE 2
MECHANICAL PROPERTIES OF PIPE AND TUBE

Alloy	Tensile Strength, Min., ksi (MPa)	Yield Strength (0.2% Offset), Min., ksi (MPa)	Elongation in 2 in. (50.8 mm) or 4*D*,[A] Min., %
Ni-Mo			
UNS N10001	100 (690)	45 (310)	40
UNS N10665	110 (760)	51 (350)	40
UNS N10675	110 (760)	51 (350)	40
UNS N10629	110 (760)	51 (350)	40
UNS N10624	104 (720)	46 (320)	40
Ni-Mo-Cr-Fe			
UNS N10242	105 (725)	45 (310)	40
Low C Ni-Mo-Cr			
UNS N10276	100 (690)	41 (283)	40
UNS N06022	100 (690)	45 (310)	45
UNS N06455	100 (690)	40 (276)	40
Ni-Cr-Fe-Mo-Cu			
UNS N06007	90 (621)	35 (241)	35
UNS N06975	85 (586)	32 (221)	40
UNS N06985	90 (621)	35 (241)	40
UNS N06030	85 (586)	35 (241)	30
UNS N06255	85 (586)	32 (221)	40
UNS N06250	90 (621)	35 (241)	40
Ni-Fe-Cr-Mo			
UNS N08320	75 (517)	28 (193)	35
UNS N08135	73 (503)	31 (214)	40
Ni-Cr-Mo-Fe			
UNS N06002	100 (690)	40 (276)	35
UNS N06060	90 (621)	35 (241)	40
Ni-Fe-Cr-Co			
UNS R30556	100 (690)	45 (310)	40
Ni-Cr-W-Mo			
UNS N06230[B]	110 (760)	45 (310)	40
Low C Ni-Cr-Mo			
UNS N06058	110 (760)	52 (360)	40
UNS N06059	100 (690)	45 (310)	45
Low C Ni-Cr-Mo-Cu			
UNS N06200	100 (690)	41 (283)	45
Ni-Fe-Cr-Mo-Cu Low Carbon			
UNS N08031	94 (650)	40 (276)	40
UNS N08535	73 (503)	31 (214)	40
Low C Ni-Cr-Mo-W			
UNS N06686	100 (690)	45 (310)	45
Ni-Co-Cr-Si			
UNS N12160	90 (620)	35 (240)	40
Low C Cr-Ni-Fe-N			
UNS R20033	109 (750)	55 (380)	40
Low C Ni-Mo-Cr-Ta			
UNS N06210	100 (690)	45 (310)	45

[A] *D* refers to the diameter of the tension specimen.

[B] Solution annealed at a minimum temperature of 2200°F (1204°C) followed by a water quench or rapidly cooled by other means.

TABLE 3
PERMISSIBLE VARIATIONS IN OUTSIDE DIAMETER AND WALL THICKNESS (AVERAGE WALL)

Specified Outside Diameter	Wall Thickness, %					
	Outside Diameter		Average		Minimum Wall	
	+	−	+	−	+	−
	Inches					
0.500 to 5/8, incl.	0.005	0.005	12.5	12.5	25.0	0
Over 5/8 to 1 1/2, incl.	0.0075	0.0075	10.0	10.0	20.0	0
Over 1 1/2 to 3 1/2, incl.	0.010	0.010	10.0	10.0	22.0	0
	Millimeters					
12.7 to 15.88, incl.	0.13	0.13	12.5	12.5	25.0	0
Over 15.88 to 38.100, incl.	0.190	0.190	10.0	10.0	20.0	0
Over 38.100 to 88.900, incl.	0.254	0.254	10.0	10.0	22.0	0

Alloy	Density lb/in.^{3}	Density g/cm^3
Nickel-molybdenum:		
UNS N10001	0.334	9.24
UNS N10242	0.327	9.05
UNS N10665	0.333	9.22
UNS N10675	0.333	9.22
UNS N10629	0.333	9.22
UNS N10624	0.322	8.9
Low carbon nickel-molybdenum-chromium:		
UNS N10276	0.321	8.87
UNS N06022	0.314	8.69
UNS N06455	0.312	8.64
Nickel-chromium-iron-molybdenum-copper:		
UNS N06007	0.300	8.31
UNS N06975	0.295	8.17
UNS N06985	0.300	8.31
UNS N06030	0.297	8.22
UNS N06255	0.299	8.29
UNS N06250	0.307	8.58
Nickel-iron-chromium-molybdenum:		
UNS N08320	0.291	8.05
UNS N08135	0.292	8.10
Nickel-chromium-molybdenum-iron:		
UNS N06002	0.297	8.23
UNS N06060	0.315	8.71
Nickel-iron-chromium-cobalt:		
UNS R30556	0.297	8.23
Nickel-chromium-tungsten-molybdenum:		
UNS N06230	0.324	8.97
Low carbon-nickel-chromium-molybdenum:		
UNS N06058	0.318	8.80
UNS N06059	0.311	8.6
UNS N06200	0.307	8.50
Low carbon nickel-iron-chromium-molybdenum-copper:		
UNS N08031	0.29	8.1
UNS N08535	0.291	8.07
Low carbon-nickel-chromium molybdenum-tungsten:		
UNS N06686	0.315	8.73
Nickel-cobalt-chromium-silicon:		
UNS N12160	0.292	8.08
Low carbon chromium-nickel-iron-nitrogen:		
UNS R20033	0.29	8.1
Low carbon nickel-molybdenum-chromium-tantalum:		
UNS N06210	0.316	8.76

9. Workmanship, Finish, and Appearance

9.1 The material shall be uniform in quality and condition, smooth, and free of injurious imperfections.

10. Sampling

10.1 *Lots for Chemical Analysis and Mechanical Testing:*

10.1.1 A lot for chemical analysis shall consist of one heat.

10.1.2 A lot of pipe or tube for mechanical testing shall be defined as the material from one heat in the same condition and specified cross-section and in no case more than 10,000 lb (4500 kg).

10.2 *Sampling of Chemical Analysis:*

10.2.1 A representative sample shall be taken from each lot during pouring or subsequent processing.

10.2.2 Product (check) analysis shall be wholly the responsibility of the purchaser.

10.3 *Sampling for Mechanical Testing:*

10.3.1 A representative sample shall be taken from each lot of finished material.

11. Number of Tests and Retests

11.1 *Chemical Analysis* — One test per lot.

11.2 *Tension Test* — One test per lot.

11.3 *Retests* — If the specimen used in the mechanical test of any lot fails to meet the specified requirements, two additional specimens shall be taken from different sample pieces and tested. The results of the tests on both of these specimens shall meet the specified requirements.

12. Specimen Preparation

12.1 Tension test specimens shall be taken from material after final heat treatment and tested in the direction of fabrication.

12.2 Whenever possible, all pipe and tube shall be tested in full tubular size. When testing in full tubular size is not possible, longitudinal strip specimens, or the largest possible round specimen prepared in accordance with Test Methods E 8, shall be used.

13. Test Methods

13.1 The chemical composition and mechanical properties of the material as enumerated in this specification shall be determined, in case of disagreement, in accordance with the following methods:

13.1.1 *Chemical Analysis* — Test Methods E 1473. For elements not covered by Test Methods E 1473, the referee method shall be as agreed upon between the manufacturer and the purchaser. The elements listed as "remainder" shall be determined arithmetically by difference.

13.1.2 *Tension Test* — Test Methods E 8.

13.1.3 *Determining Significant Places* — Practice E 29.

13.1.4 *Method of Sampling* — Practice E 55.

13.2 For purposes of determining compliance with the specified limits for requirements of the properties listed in the following table, an observed value or a calculated value shall be rounded in accordance with the rounding method of Practice E 29.

Requirements	Rounded Unit for Observed or Calculated Value
Chemical composition and tolerances	Nearest unit in the last right-hand place of figures of the specified limit
Tensile strength and yield strength	Nearest 1000 psi (7 MPa)
Elongation	Nearest 1%

14. Inspection

14.1 Inspection of the material shall be in accordance with agreements between the manufacturer and the purchaser as part of the purchase contract.

15. Rejection and Rehearing

15.1 Material, tested by the purchaser, that fails to conform to the requirements of this specification may be rejected. Rejection should be reported to the producer or supplier promptly and in writing. In case of dissatisfaction with the results of the test, the producer or supplier may make claim for a rehearing.

16. Certification

16.1 A manufacturer's certification shall be furnished to the purchaser stating that material has been manufactured, tested, and inspected in accordance with this specification, and that the test results on representative samples meet specification requirements. A report of the test results shall be furnished.

17. Product Marking

17.1 Each piece of material ½ in. (12.7 mm) and over in diameter shall be marked with this specification number, alloy, heat number, name of the material, and size of the product.

17.2 Each bundle or shipping container shall be marked with the name of the material; specification number; alloy; class; condition; size; gross, tare, and net weights; consignor and consignee addresses; contract or order number; and such information as may be defined in the contract or order.

18. Keywords

18.1 seamless pipe; seamless tube; UNS N06002; UNS N06007; UNS N06022; UNS N06030; UNS N06058; UNS N06059; UNS N06060; UNS N06200; UNS N06210; UNS N06230; UNS N06250; UNS N06255; UNS N06455; UNS N06686; UNS N06975; UNS N06985; UNS N08031; UNS N08135; UNS N08320; UNS N08535; UNS N10001; UNS N10242; UNS N10276; UNS N10624; UNS N10629; UNS N10665; UNS N10675; UNS N12160; UNS R20033; UNS R30556

APPENDIX

(Nonmandatory Information)

X1. HEAT TREATMENT

X1.1 Proper heat treatment during or subsequent to fabrication is necessary for optimum performance and the manufacturer shall be consulted for details.

X2. PIPE SCHEDULES

X2.1 The schedules listed in Table X2.1 are regularly available. This Table is published for information only.

TABLE X2.1
PIPE SCHEDULES[A]

Nominal Pipe Size, in.	Outside Diameter	Nominal Wall Thickness		
		Schedule No. 10	Schedule No. 40	Schedule No. 80
		Inches		
1/4	0.540	0.065	0.088	...
3/8	0.675	0.065	0.091	0.126
1/2	0.840	0.083	0.109	0.147
3/4	1.050	0.083	0.113	0.154
1	1.315	0.109	0.133	0.179
1 1/4	1.660	0.109	0.140	0.191
1 1/2	1.900	0.109	0.145	0.200
2	2.375	0.109	0.154	0.218
2 1/2	2.875	0.120	0.203	0.276
3	3.500	0.120	0.216	0.300
		Millimeters		
1/4	13.72	1.65	2.24	...
3/8	17.14	1.65	2.31	3.20
1/2	21.34	2.11	2.77	3.73
3/4	26.67	2.11	2.87	3.91
1	33.40	2.77	3.38	4.55
1 1/4	42.16	2.77	3.56	4.85
1 1/2	48.26	2.77	3.68	5.08
2	60.32	2.77	3.91	5.54
2 1/2	73.02	3.05	5.16	7.04
3	88.90	3.05	5.49	7.62

[A] The pipe schedules shown conform with standards adopted by the American National Standards Institute.

SPECIFICATION FOR UNS N08904, UNS N08925, UNS N08031, UNS N08932, UNS N08926, AND UNS R20033 PLATE, SHEET, AND STRIP

SB-625

(Identical with ASTM Specification B 625-99 except that certification has been made mandatory.)

1. Scope

1.1 This specification covers alloys UNS N08904, UNS N08925, UNS N08031, UNS N08932, UNS N08926, and UNS R20033 plate, sheet, and strip in the annealed temper.

1.2 The values stated in inch-pound units are to be regarded as the standard. The values given in parentheses are for information only.

1.3 The following safety hazards caveat pertains only to the test methods portion, Section 12, of this specification: *This standard does not purport to address all of the safety concerns, if any, associated with its use. It is the responsibility of the user of this standard to establish appropriate safety and health practices and determine the applicability of regulatory limitations prior to use.*

2. Referenced Documents

2.1 *ASTM Standards:*

E 8 Test Methods of Tension Testing of Metallic Materials

E 10 Test Method for Brinell Hardness of Metallic Materials

E 18 Test Methods for Rockwell Hardness and Rockwell Superficial Hardness of Metallic Materials

E 29 Practice for Using Significant Digits in Test Data to Determine Conformance with Specifications

E 38 Methods for Chemical Analysis of Nickel-Chromium and Nickel-Chromium-Iron Alloys

E 55 Practice for Sampling Wrought Nonferrous Metals and Alloys for Determination of Chemical Composition

E 140 Hardness Conversion Tables for Metals

E 353 Test Methods for Chemical Analysis of Stainless, Heat-Resisting, Maraging, and Other Similar Chromium-Nickel-Iron Alloys

3. Terminology

3.1 *Definitions of Terms Specific to This Standard:*

3.1.1 *plate* — material $^{3}/_{16}$ in. (4.76 mm) and over in thickness and over 10 in. (254 mm) in width.

3.1.2 *sheet* — material under $^{3}/_{16}$ in. (4.76 mm) in thickness and 24 in. (609.6 mm) and over in width. Material under $^{3}/_{16}$ in. (4.75 mm) in thickness and in all widths with No. 4 finish.

3.1.3 *strip* — material under $^{3}/_{16}$ in. (4.76 mm) in thickness and under 24 in. (609.6 mm) in width.

4. Ordering Information

4.1 Orders for material under this specification shall include the following information:

4.1.1 Quantity (weight or number of pieces),

4.1.2 Alloy name or UNS number,

4.1.3 Form, plate, sheet or strip,

4.1.4 Dimensions,

4.1.5 Type edge required, for strip only (see 7.4.1),

4.1.6 Finish (Section 8) — For sheet with No. 4 finish, specify whether one or both sides are to be polished,

4.1.7 ASTM designation,

4.1.8 Additions to the specification or special requirements,

TABLE 1
CHEMICAL REQUIREMENTS

Elements	Composition, % UNS N08904	Composition, % UNS N08925	Composition, % UNS N08932	Composition, % UNS N08031	Composition, % UNS N08926	Composition, % UNS R20033
Carbon, max	0.020	0.020	0.020	0.015	0.020	0.015
Manganese, max	2.00	1.00	2.00	2.0	2.00	2.0
Phosphorus, max	0.045	0.045	0.025	0.020	0.03	0.02
Sulfur, max	0.035	0.030	0.010	0.010	0.01	0.01
Silicon, max	1.00	0.50	0.40	0.3	0.5	0.50
Nickel	23.00–28.00	24.00–26.00	24.0–26.0	30.0–32.0	24.00–26.00	30.0–33.0
Chromium	19.00–23.00	19.00–21.00	24.0–26.0	26.0–28.0	19.00–21.00	31.0–35.0
Molybdenum	4.0–5.0	6.0–7.0	4.5–6.5	6.0–7.0	6.0–7.0	0.50–2.0
Copper	1.0–2.0	0.8–1.5	1.0–2.0	1.0–1.4	0.5–1.5	0.30–1.20
Nitrogen	...	0.10–0.20	0.15–0.25	0.15–0.25	0.15–0.25	0.35–0.60
Iron	balance	balance	balance	balance	balance	balance

TABLE 2
PRODUCT ANALYSIS TOLERANCES

	Tolerances over the max limit or under the min limit, %			
Elements	UNS N08904 UNS N08925 UNS N08932	UNS N08031	UNS N08926	UNS R20033
Carbon	0.005	0.005	0.005	0.005
Manganese	0.04	0.04	0.04	0.04
Phosphorus	0.005	0.005	0.005	0.005
Sulfur	0.005	0.003	0.003	0.003
Silicon	0.05	0.03	0.03	0.05
Chromium	0.20	0.30	0.25	0.30
Nickel	0.20	0.30	0.25	0.30
Molybdenum	0.10	0.15	0.15	0.05
Copper	0.10	0.04	0.04	0.10
Nitrogen	...	0.01	0.01	0.03

4.1.9 Certification and test reports — Certification and test reports are required (Section 15), and

4.1.10 Source inspection — State if inspection is required (Section 13).

5. Chemical Composition

5.1 The material sampled, in accordance with 9.2, shall conform to the composition limits specified in Table 1.

5.2 If a product analysis is subsequently made, the material shall conform to the composition limits with the product analysis variation specified in Table 2.

6. Mechanical Properties and other Requirements

6.1 *Tensile and Hardness Requirements* — The material shall conform to the mechanical property requirements specified in Table 3.

7. Dimensions and Permissible Variations

7.1 *Sheet* — The material referred to as sheet shall conform to the variations in dimensions specified in Tables 4 to 9, inclusive.

7.2 *Cold-Rolled Strip* — The material referred to as cold-rolled strip shall conform to the permissible variations in dimensions specified in Tables 10 to 13, inclusive.

TABLE 3
MECHANICAL PROPERTY REQUIREMENTS

Alloy	Form	Tensile Strength, min, ksi (MPa)	Yield Strength (0.2% offset), min, psi (MPa)	Elongation in 2 in. or 50.8 mm, or 4*D*, min, %	Rockwell Hardness (or equivalent)[A]
UNS N08904	sheet	71 (490)	31 000 (215)	35	70–90 HRB
	strip	71 (490)	31 000 (215)	35	70–90 HRB
	plate	71 (490)	31 000 (215)	35	70–90 HRB
UNS N08925	sheet	87 (600)	43 000 (295)	40	...
	strip	87 (600)	43 000 (295)	40	...
	plate	87 (600)	43 000 (295)	40	...
UNS N08932	plate	87 (600)	44 000 (305)	40	...
UNS N08031	sheet	94 (650)	40 000 (276)	40	...
	strip	94 (650)	40 000 (276)	40	...
	plate	94 (650)	40 000 (276)	40	...
UNS N08926	sheet	94 (650)	43 000 (295)	35	...
	strip	94 (650)	43 000 (295)	35	...
	plate	94 (650)	43 000 (295)	35	...
UNS R20033	sheet	109 (750)	55 000 (380)	40	...
	strip	109 (750)	55 000 (380)	40	...
	plate	109 (750)	55 000 (380)	40	...

[A] Hardness values are shown for information only and shall not constitute a basis for acceptance or rejection as long as the other mechanical properties are met.

TABLE 4
THICKNESS TOLERANCES FOR HOT-ROLLED AND COLD-ROLLED SHEETS

Specified Thickness,[A] in. (mm)	Tolerance Over and Under, in. (mm)
Over 0.145 (3.68) to less than $^3/_{16}$ (4.76)	0.014 (0.36)
Over 0.130 (3.30) to 0.145 (3.68), incl	0.012 (0.30)
Over 0.114 (2.89) to 0.130 (3.30), incl	0.010 (0.25)
Over 0.098 (2.49) to 0.114 (2.89), incl	0.009 (0.23)
Over 0.083 (2.10) to 0.098 (2.49), incl	0.008 (0.20)
Over 0.072 (1.83) to 0.083 (2.10), incl	0.007 (0.18)
Over 0.058 (1.47) to 0.072 (1.83), incl	0.006 (0.15)
Over 0.040 (1.02) to 0.058 (1.47), incl	0.005 (0.13)
Over 0.026 (0.66) to 0.040 (1.02), incl	0.004 (0.10)
Over 0.016 (0.41) to 0.026 (0.66), incl	0.003 (0.08)
Over 0.007 (0.18) to 0.016 (0.41), incl	0.002 (0.05)
Over 0.005 (0.13) to 0.007 (0.18), incl	0.0015 (0.04)
0.005 (0.13)	0.001 (0.02)

[A] Thickness measurements are taken at least $^3/_8$ in. (9.5 mm) from the edge of the sheet.

TABLE 5
WIDTH AND LENGTH TOLERANCES FOR HOT-ROLLED AND COLD-ROLLED RESQUARED SHEETS (STRETCHER LEVELLED STANDARD OF FLATNESS)[A]

Specified Dimensions	Tolerance, in.		Tolerance, mm	
	Over	Under	Over	Under
For thicknesses under 0.131 in. (3.33 mm):				
Widths up to 48 in. (1.22 m), excl	$^1/_{16}$	0	1.6	0
Widths 48 in. (1.22 m) and over	$^1/_8$	0	3.2	0
Lengths up to 120 in. (3.05 m), excl	$^1/_{16}$	0	1.6	0
Lengths 120 in. (3.05 m) and over	$^1/_8$	0	3.2	0
For thicknesses 0.131 in. (3.33 mm) and over:				
All widths and lengths	$^1/_4$	0	6.4	0

[A] Polished sheets with finishes No. 4 are produced to tolerances given in this table.

TABLE 6
WIDTH, LENGTH, AND CAMBER TOLERANCES FOR HOT-ROLLED AND COLD-ROLLED SHEETS NOT RESQUARED

Width Tolerances		
	Tolerance for Specified Width	
Specified Thickness	24 to 48 in. (0.61 to 1.2 m), excl	48 in. (1.2 m) and over
Less than 3/16 in. (4.7 mm)	1/16 in. (1.6 mm) over, 0 under	1/8 in. (3.2 mm) over, 0 under

Length Tolerances		
	Tolerance	
Specified Length	Over	Under
Up to 10 ft (3.0 m), incl	1/4 in. (6.4 mm)	0
Over 10 ft (3.0 m) to 20 ft (6.1 m), incl	1/2 in. (12.7 mm)	0

Camber Tolerances[A]	
Specified Width	Tolerance per Unit Length of Any 8 ft (2.4 m)
24 in. (0.61 m) to 36 in. (0.9 m), incl	1/8 in. (3.17 mm)
Over 36 in. (0.9 m)	3/32 in. (2.38 mm)

[A] Camber is the greatest deviation of a side edge from a straight line, the measurement being taken on the concave side with a straight edge.

TABLE 7
FLATNESS TOLERANCES FOR HOT-ROLLED AND COLD-ROLLED SHEETS

Sheets Not Specified to Stretcher Levelled-Standard of Flatness (Exclusive of Dead Soft and Deep Drawing Sheets)		
Specified Thickness	Width	Flatness Tolerance (max deviation from a horizontal flat surface)
0.062 in. (1.57 mm) and over	To 60 in. (1.5 m), incl	1/2 in. (12.7 mm)
	Over 60 in. (1.5 m) to 72 in. (1.8 m), incl	3/4 in. (19.0 mm)
	Over 72 in. (1.8 m)	1 in. (25.4 mm)
Under 0.062 in. (1.57 mm)	To 36 in. (0.9 m), incl	1/2 in (12.7 mm)
	Over 36 in. (0.9 m) to 60 in. (1.5 m), incl	3/4 in. (19.0 mm)
	Over 60 in. (1.5 m)	1 in. (25.4 mm)

Sheets Specified to Stretcher-Levelled Standard of Flatness			
Specified Thickness	Width	Length	Flatness Tolerance (max deviation from a horizontal flat surface)
Under 3/16 in. (4.75 mm)	to 48 in. (1.22 m), incl	to 96 in. (2.44 m), incl	1/8 in. (3.17 mm)
Under 3/16 in. (4.75 mm)	to 48 in. (1.22 m), incl	Over 96 in. (2.44 m)	1/4 in. (6.35 mm)
Under 3/16 in. (4.75 mm)	Over 48 in. (1.22 m)	to 96 in. (2.44 m), incl	1/4 in. (6.35 mm)
Under 3/16 in. (4.75 mm)	Over 48 in. (1.22 m)	Over 96 in. (2.44 m)	1/4 in. (6.35 mm)

TABLE 8
DIAMETER TOLERANCES FOR HOT-ROLLED AND COLD-ROLLED SHEETS SHEARED CIRCLES

Specified Thickness	Tolerance Over Specified Diameter (No Tolerance Under)		
	Diameters Under 30 in. (0.762 m)	Diameters 30 to 48 in (0.762 m to 1.219 m)	Diameters Over 48 in. (1.219 m)
0.0972 in. (2.47 mm) and thicker	1/8 in. (3.17 mm)	3/16 in. (4.76 mm)	1/4 in. (6.35 mm)
0.0971 in. (2.47 mm) to 0.0568 in. (1.443 mm), incl	3/32 in. (2.38 mm)	5/32 in. (3.97 mm)	7/32 in. (5.56 mm)
0.0567 in. (1.440 mm) and thinner	1/16 in. (1.59 mm)	1/8 in. (3.17 mm)	3/16 in. (4.75 mm)

TABLE 9
WEIGHT TOLERANCES FOR HOT-ROLLED AND COLD-ROLLED SHEETS

It is not praticable to produce hot-rolled and cold-rolled sheets to exact theoretical weight. Sheets of any one item of a specified thickness and size in any finish may be overweight to the following extent.

(1) Any item of five sheets or less, or any item estimated to weigh 200 lb (90.7 kg) or less, may actually weigh as much as 10 % over the theoretical weight.

(2) Any item of more than five sheets and estimated to weigh more than 200 to (90.7 kg) may actually weigh as much as 7.5 % over the theoretical weight.

The underweight variations for sheets are limited by the under thickness tolerances shown in Table 4.

For determining estimated weights the following factors are used:

41.9 lb/ft^2·in. thickness or

19.0 kg/cm^2·mm thickness

7.3 *Plate* — The material referred to as plate shall conform to the permissible variations in dimensions specified in Tables 14 to 19, inclusive.

7.4 *Edges for Cold-Rolled Strip:*

7.4.1 *The various types of edges procurable shall be as follows:*

7.4.1.1 *No. 1 Edge* — Rolled edge, contour as specified.

7.4.1.2 *No. 3 Edge* — An edge produced by slitting.

7.4.1.3 *No. 5 Edge* — Approximately square edge produced by rolling or filling, or both, after slitting.

8. Workmanship, Finish, and Appearance

8.1 The material shall be free of injurious imperfections and shall correspond to the designated finish as described below.

8.1.1 *Sheet* — The various types of finish procurable on sheet products shall be as follows:

8.1.1.1 *No. 1 Finish* — Hot rolled, annealed, and descaled; produced by hot rolling to specified thicknesses followed by annealing and descaling (see 8.2).

8.1.1.2 *No. 2D Finish* — Dull, cold-rolled finish; produced by cold rolling to the specified thickness, annealing, and descaling. The dull finish results from the descaling and pickling operations.

8.1.1.3 *No. 2B Finish* — Bright, cold-rolled finish; produced by giving a final light cold-rolled pass with polished rolls, to a sheet which has been annealed and descaled.

8.1.1.4 *No. 4 Finish* — General purpose, polished finish. Following initial grinding with coarser abrasives, sheets are generally finished last with abrasives approximately 120 to 150 mesh. Sheets can be produced with one or two sides polished. When polished on one side only, the other side may be rough ground in order to obtain the necessary flatness.

8.1.1.5 *Bright Annealed* — Bright finish produced by cold rolling to thickness, then annealing in a protective atmosphere.

8.1.2 *Strip* — The type of finish procurable on cold-rolled strip shall be as follows:

8.1.2.1 *No. 1 Finish* — Cold rolled to specified thickness, annealed, and pickled (see 8.2). Appearance of this finish is a dull gray.

8.1.2.2 *Bright Annealed* — Bright finish produced by cold rolling to thickness, then annealing in a protective atmosphere.

8.1.3 *Plate* — The types of finish procurable on plates shall be as follows:

8.1.3.1 *Hot Rolled, Annealed* — Scale not removed.

8.1.3.2 *Hot Rolled, Annealed, Descaled* — Scale removed by a blast cleaning or pickling operation.

8.1.3.3 *Cold Rolled, Annealed* — Scale not removed.

8.1.3.4 *Cold Rolled, Annealed, Descaled* — Scale removed by a blast cleaning or pickling operation.

TABLE 10
THICKNESS TOLERANCES FOR COLD-ROLLED STRIP

Specified Thickness, in.	Thickness Tolerances for the Thicknesses and Widths Over and Under, in Width, in.							
	3/4 to 1, incl	Over 1 to 3, incl	Over 3 to 6, incl	Over 6 to 9, incl	Over 9 to 12, incl	Over 12 to 16, incl	Over 16 to 20, incl	Over 20 to 24, excl
	Thickness Tolerances, in.							
Over 0.160 to less than 3/16	0.002	0.003	0.004	0.004	0.004	0.005	0.006	0.006
Over 0.099 to 0.160, incl	0.002	0.002	0.003	0.004	0.004	0.004	0.005	0.005
Over 0.068 to 0.099, incl	0.002	0.002	0.003	0.003	0.003	0.004	0.004	0.004
Over 0.049 to 0.068, incl	0.002	0.002	0.003	0.003	0.003	0.003	0.004	0.004
Over 0.039 to 0.049, incl	0.002	0.002	0.0025	0.003	0.003	0.003	0.004	0.004
Over 0.034 to 0.039, incl	0.002	0.002	0.0025	0.003	0.003	0.003	0.003	0.003
Over 0.028 to 0.034, incl	0.0015	0.0015	0.002	0.0025	0.0025	0.0025	0.003	0.003
Over 0.025 to 0.028, incl	0.001	0.0015	0.0015	0.002	0.002	0.002	0.0025	0.003
Over 0.019 to 0.025, incl	0.001	0.001	0.0015	0.002	0.002	0.002	0.0025	0.0025
Over 0.016 to 0.019, incl	0.001	0.001	0.001	0.0015	0.0015	0.002	0.002	0.002
Over 0.012 to 0.016, incl	0.001	0.001	0.001	0.0015	0.0015	0.0015	0.002	0.002
Over 0.011 to 0.012, incl	0.001	0.001	0.001	0.0015	0.0015	0.0015	0.0015	0.0015
Over 0.010 to 0.011, incl	0.001	0.001	0.001	0.001	0.0015	0.0015	0.0015	0.0015
0.010	0.001	0.001	0.001	0.001	0.001	0.001	0.0015	0.0015

Specified Thickness, mm	Thickness Tolerances for the Thicknesses and Widths Given Over and Under, mm Width, mm							
	19.05 to 25.4, incl	Over 25.4 76.2, incl	Over 76.2 to 152.4, incl	Over 152.4 to 228.6, incl	Over 228.6 to 304.8, incl	Over 304.8 to 406.4, incl	Over 406.4 to 508.0, incl	Over 508.0 to 609.6, excl
	Thickness Tolerance, mm							
Over 4.06 to less than 4.76	0.05	0.08	0.10	0.10	0.10	0.13	0.15	0.15
Over 2.51 to 4.06, incl	0.05	0.05	0.08	0.10	0.10	0.10	0.13	0.13
Over 1.73 to 2.51, incl	0.05	0.05	0.08	0.08	0.08	0.10	0.10	0.10
Over 1.24 to 1.73, incl	0.05	0.05	0.08	0.08	0.08	0.08	0.10	0.10
Over 0.99 to 1.24, incl	0.05	0.05	0.06	0.08	0.08	0.08	0.10	0.10
Over 0.86 to 0.99, incl	0.05	0.05	0.06	0.08	0.08	0.08	0.08	0.08
Over 0.71 to 0.86, incl	0.04	0.04	0.05	0.06	0.06	0.06	0.08	0.08
Over 0.64 to 0.71, incl	0.02	0.04	0.04	0.05	0.05	0.05	0.06	0.08
Over 0.48 to 0.64, incl	0.02	0.02	0.04	0.05	0.05	0.05	0.06	0.06
Over 0.41 to 0.48, incl	0.02	0.02	0.02	0.04	0.04	0.05	0.05	0.05
Over 0.30 to 0.41, incl	0.02	0.02	0.02	0.04	0.04	0.04	0.05	0.05
Over 0.28 to 0.30, incl	0.02	0.02	0.02	0.02	0.04	0.04	0.04	0.04
Over 0.25 to 0.28, incl	0.02	0.02	0.02	0.02	0.02	0.04	0.04	0.04
0.25	0.02	0.02	0.02	0.02	0.02	0.02	0.04	0.04

8.2 *Sheet, Strip, and Plate* — Material may be ground to remove surface imperfections, provided such grinding does not reduce the thickness or width at any point beyond the permissible variations in dimensions.

9. Sampling

9.1 *Lots for Chemical Analysis and Mechanical Testing:*

9.1.1 A lot for chemical analysis shall consist of one heat.

9.1.2 *Plate* — A lot of plate for testing and inspection purposes shall consist of the products resulting from the rolling of one heat of material in the same condition (temper) and specified thickness.

9.1.3 *Sheet and Strip* — A lot of sheet or strip for testing and inspection purposes shall consist of material from one heat in the same form (sheet or strip), condition (temper), finish, and specified thickness but in no case more than 25 000 lb (11 340 kg).

NOTE 1 — Where material cannot be identified by heat, a lot shall consist of not more than 500 lb (227 kg) of material in the same thickness and condition, except that for plates weighing over 500 lb, only one specimen shall be taken.

TABLE 11
CROWN TOLERANCES FOR COLD-ROLLED STRIP

Specified Thickness	Additional Thickness, at Middle of Strip Over That Shown in Table 10 for Edge Measurement, for Widths and Thicknesses Given		
	Width		
	To 5 in. (127 mm), incl	Over 5 in. (127 mm) to 12 in. (304.8 mm), incl	Over 12 in. (304.8 mm) to 24 in. (609.6 mm), excl
0.005 in. (0.13 mm) to 0.010 in. (0.25 mm), incl	0.00075 in. (0.02 mm)	0.001 in. (0.02 mm)	0.0015 in. (0.04 mm)
Over 0.010 in. (0.25 mm) to 0.025 in. (0.64 mm), incl	0.001 in. (0.02 mm)	0.0015 in. (0.04 mm)	0.002 in. (0.05 mm)
Over 0.025 in. (0.64 mm) to 0.065 in. (1.65 mm), incl	0.0015 in. (0.04 mm)	0.002 in. (0.05 mm)	0.0025 in. (0.06 mm)
Over 0.065 in. (1.65 mm) to $^3/_{16}$ in. (4.75 mm), excl	0.002 in. (0.05 mm)	0.0025 in. (0.06 mm)	0.003 in. (0.08 mm)

NOTE — Cold-rolled strip may be thicker at the middle than at the edges by the amounts given in this table.

9.2 *Sampling for Chemical Analysis:*

9.2.1 A representative sample shall be taken from each heat during pouring or subsequent processing.

9.2.2 If the manufacturer determines that the material meets the chemcial requirements during pouring or subsequent processing, he shall not be required to sample and analyze the finished product.

9.2.3 Product analysis, if performed, shall be wholly the responsibility of the purchaser.

9.3 *Sampling for Mechanical Tests:*

9.3.1 A sample of the material to provide test specimens for mechanical tests shall be taken from such a location in each lot as to be representative of that lot.

9.3.2 When samples are to be taken after delivery, the purchaser of material ordered to cut lengths may request on the purchase order additional material of adequate size to provide sample coupons for inspection purposes.

10. Number of Tests

10.1 In the case of sheet or strip supplied in coil form, two or more tension tests (one from each end of each coil) and one or more hardness tests shall be made on specimens taken from each end of the coil. When material is supplied in flat sheet, flat strip, or plate, one tension, and one or more hardness tests, shall be made on each 100 or less sheets, strips, or plates of the same lot.

10.2 If any specimens selected to represent any heat fail to meet any of the test requirements, the material represented by such specimens may be reheat-treated and resubmitted for test.

11. Specimen Preparation

11.1 Tension test specimens from material under $^1/_2$ in. (12.7 mm) in thickness shall be of the full thickness of the material and machined to the form and dimensions shown for the sheet-type specimen in Test Methods E 8.

11.2 Tension test specimens from material $^1/_2$ in. (12.7 mm) and over shall be of the full thickness of the material, machined to the form and dimensions shown for the plate-type specimen in Test Methods E 8, or shall be the largest possible round specimen shown in Test Methods E 8. In case of dispute, the referee method shall be to use the plate-type specimen.

11.3 Tension test specimens shall be taken from material after final heat treatment and shall be selected in the transverse direction unless prohibited by width.

12. Test Methods

12.1 The chemical composition and mechanical properties of the material as enumerated in this specification shall, in case of disagreement, be determined in accordance with the following methods:

TABLE 12
WIDTH TOLERANCES FOR COLD-ROLLED STRIP OF EDGE NUMBERS 1, 3, AND 5

Edge Numbers 1 and 5

Specifed Edge No.	Width	Thickness	Width Tolerance for Thickness and Width Given	
			Over	Under
1 and 5	$^{9}/_{32}$ in. (7.14 mm) and under	$^{1}/_{16}$ in. (1.59 mm) and under	0.005 in. (0.13 mm)	0.005 in. (0.13 mm)
1 and 5	Over $^{9}/_{32}$ in. (7.14 mm) to $^{3}/_{4}$ in. (19.050 mm), incl	$^{3}/_{32}$ in. (2.38 mm) and under	0.005 in. (0.13 mm)	0.005 in. (0.13 mm)
1 and 5	Over $^{3}/_{4}$ in. (19.050 mm) to 5 in. (127.0 mm), incl	$^{1}/_{8}$ in. (3.17 mm) and under	0.005 in. (0.13 mm)	0.005 in. (0.13 mm)
5	Over 5 in. (127.0 mm) to 9 in. (228.6 mm), incl	$^{1}/_{8}$ in. (3.17 mm) to 0.008 in. (0.20 mm), incl	0.010 in. (0.25 mm)	0.010 in. (0.25 mm)
5	Over 9 in. (228.6 mm) to 20 in. (508.0 mm), incl	0.105 in. (2.667 mm) to 0.015 in. (0.381 mm)	0.010 in. (0.25 mm)	0.010 in. (0.25 mm)
5	Over 20 in. (508.0 mm) to $23^{15}/_{16}$ in. (608.0 mm), incl	0.080 in. (2.032 mm) to 0.023 in. (0.584 mm)	0.015 in. (0.38 mm)	0.015 in. (0.38 mm)

Edge Number 3

Specified Thickness, in.	Width Tolerance for Thickness and Width Given, Over and Under, in.					
	Under $^{1}/_{2}$ to $^{3}/_{16}$, incl	$^{1}/_{2}$ to 6, incl	Over 6 to 9, incl	Over 9 to 12, incl	Over 12 to 20, incl	Over 20 to 24, excl
Under $^{3}/_{16}$ in. to 0.161, incl	...	0.016	0.020	0.020	0.031	0.031
0.16 to 0.100, incl	0.010	0.010	0.016	0.016	0.020	0.020
0.100 to 0.069, incl	0.008	0.008	0.010	0.010	0.016	0.020
0.068	0.005	0.005	0.005	0.010	0.016	0.020

Specified Thickness, mm	Width Tolerance for Thickness and Width Given, Over and Under, mm					
	Under 12.7 to 4.76, incl	12.7 to 152.4, incl	Over 152.4 to 228.6, incl	Over 228.6 to 304.8, incl	Over 304.8 to 508.0, incl	Over 508.0 to 609.6, excl
Under 4.76 to 4.09, incl	...	0.41	0.51	0.51	0.79	0.79
4.09 to 2.54, incl	0.25	0.25	0.41	0.41	0.51	0.51
2.54 to 1.75, incl	0.20	0.20	0.25	0.25	0.41	0.51
1.75 and under	0.13	0.13	0.13	0.25	0.41	0.51

TABLE 13
LENGTH AND CAMBER TOLERANCES FOR COLD-ROLLED STRIP

Length Tolerances

Specified Length	Tolerance, Over Specified Length (No Tolerance Under)
To 5 ft (1.5 m), incl	$^{3}/_{8}$ in. (9.52 mm)
Over 5 ft (1.5 m) to 10 ft (3.0 m), incl	$^{1}/_{2}$ in. (12.70 mm)
Over 10 ft (3.0 m) to 20 ft (6.1 m), incl	$^{5}/_{8}$ in. (15.88 mm)

Camber Tolerances[A]

Specified Width, in. (mm)	Tolerance per Unit Length of Any 8 ft (2438 mm), in. (mm)
To $1^{1}/_{2}$ (38.1), incl	$^{1}/_{2}$ (12.7)
Over $1^{1}/_{2}$ (38.1) to 24 (609.6), excl	$^{1}/_{4}$ (6.4)

[A] Camber is the deviation of a side edge from a straight line, and measurement is taken by placing an 8-ft (2.4-m) straightedge on the concave side and measuring the greatest distance between the strip edge and the straightedge.

TABLE 14
THICKNESS TOLERANCES OF PLATES

Specified Thickness, in. (mm)	Width,[A] in. (mm)			
	Tolerance Over Specified Thickness,[B] in. (mm)			
	To 84 (2.1), incl	Over 84 to 120 (2.1 to 3.0), incl	Over 120 to 144 (3.0 to 3.7), incl	Over 144 (3.7)
3/16 to 3/8 (4.76 to 9.52), excl	0.046 (1.17)	0.050 (1.27)	...	...
3/8 to 3/4 (9.52 to 19.05), excl	0.054 (1.37)	0.058 (1.47)	0.075 (1.90)	0.090 (2.29)
3/4 to 1 (19.05 to 25.40), excl	0.060 (1.52)	0.064 (1.63)	0.083 (2.11)	0.100 (2.54)
1 to 2 (25.40 to 50.80), incl[C]	0.070 (1.78)	0.074 (1.88)	0.095 (2.41)	0.115 (2.92)

NOTE — Thickness is measured along the longitudinal edges of the plate at least 3/8 in. (9.53 mm) from the edge.

[A] For circles the above over-thickness tolerances apply to the diameter of the circle corresponding to the width ranges shown. For plates of irregular shape the above over-thickness tolerances apply to the greatest width corresponding to the width ranges shown.

[B] For plates up to 2 in. (50.8 mm), incl, in thickness, the tolerance under specified thickness is 0.01 in. (0.25 mm).

[C] Plates over 2 in. (50.8 mm) thick are produced. Thickness tolerances for such plates are not included.

TABLE 15
WIDTH AND LENGTH TOLERANCE FOR PLATE

Width, in.	Length, in.	Tolerances Over Specified Width and Length for Given Width, Length, and Thickness, in.[A]					
		Under 3/8 in. in Thickness		3/8 to 1/2 in. incl in Thickness		Over 1/2 in. in Thickness	
		Width	Length	Width	Length	Width	Length
48 and under	144 and under	1/8	3/16	3/16	1/4	5/16	3/8
Over 48 to 60, incl		3/16	1/4	1/4	5/16	3/8	7/16
Over 60 to 84, incl		1/4	5/16	5/16	3/8	7/16	1/2
Over 84 to 108, incl		5/16	3/8	3/8	7/16	1/2	9/16
Over 108		3/8	7/16	7/16	1/2	5/8	11/16
48 and under	Over 144 to 240	3/16	3/8	1/4	1/2	5/16	5/8
Over 48 to 60, incl		1/4	7/16	5/16	5/8	3/8	3/4
Over 60 to 84, incl		3/8	1/2	7/16	11/16	1/2	3/4
Over 84 to 108, incl		7/16	9/16	1/2	3/4	5/8	7/8
Over 108		1/2	5/8	5/8	7/8	11/16	1
48 and under	Over 240 to 360	1/4	1/2	5/16	5/8	3/8	3/4
Over 48 to 60, incl		5/16	5/8	3/8	3/4	1/2	3/4
Over 60 to 84, incl		7/16	11/16	1/2	3/4	5/8	7/8
Over 84 to 108, incl		9/16	3/4	5/8	7/8	3/4	1
Over 108		5/8	7/8	11/16	1	7/8	1
60 and under	Over 360 to 480	7/16	1 1/8	1/2	1 1/4	5/8	1 3/8
Over 60 to 84, incl		1/2	1 1/4	5/8	1 3/8	3/4	1 1/2
Over 84 to 108, incl		9/16	1 1/4	3/4	1 3/8	7/8	1 1/2
Over 108		3/4	1 3/8	7/8	1 1/2	1	1 5/8
60 and under	Over 480 to 600	7/16	1 1/4	1/2	1 1/2	5/8	1 5/8
Over 60 to 84, incl		1/2	1 3/8	5/8	1 1/2	3/4	1 5/8
Over 84 to 108, incl		5/8	1 3/8	3/4	1 1/2	7/8	1 5/8
Over 108		3/4	1 1/2	7/8	1 5/8	1	1 3/4
60 and under	Over 600	1/2	1 3/4	5/8	1 7/8	3/4	1 7/8
Over 60 to 84, incl		5/8	1 3/4	3/4	1 7/8	7/8	1 7/8
Over 84 to 108, incl		5/8	1 3/4	3/4	1 7/8	7/8	1 7/8
Over 108		7/8	1 3/4	1	2	1 1/8	2 1/4

TABLE 15 (CONT'D)
WIDTH AND LENGTH TOLERANCE FOR PLATE

		Tolerances Over Specified Width and Length for Given Width, Length, and Thickness, mm[A]					
		Under 3/8 in. in Thickness		3/8 in. to 1/2 in., incl in Thickness		Over 1/2 in. in Thickness[B]	
Width, in.	Length, in.	Width	Length	Width	Length	Width	Length
1.21 and under	3.66 and under	3.2	4.8	4.8	6.4	7.9	9.5
Over 1.21 to 1.52, incl		4.8	6.4	6.4	7.9	9.5	11.1
Over 1.52 to 2.13, incl		6.4	7.9	7.9	9.5	11.1	12.7
Over 2.13 to 2.74, incl		7.9	9.5	9.5	11.1	12.7	14.3
Over 2.74		9.5	11.1	11.1	12.7	15.9	17.5
1.21 and under	Over 3.66 to 6.10	4.8	9.5	6.4	12.7	7.9	15.9
Over 1.21 to 1.52, incl		6.4	11.1	7.9	15.9	9.5	19.0
Over 1.52 to 2.13, incl		9.5	12.7	11.1	17.5	12.7	19.0
Over 2.13 to 2.74, incl		11.1	14.3	12.7	19.0	15.9	22.2
Over 2.74		12.7	15.9	15.9	22.2	17.5	25.4
1.21 and under	Over 6.10 to 9.14	6.4	12.7	7.9	15.9	9.5	19.0
Over 1.21 to 1.52, incl		7.9	15.9	9.5	19.0	12.7	19.0
Over 1.52 to 2.13, incl		11.1	17.5	12.7	19.0	15.9	22.2
Over 2.13 to 2.74, incl		14.3	19.0	15.9	22.2	19.0	25.4
Over 2.74		15.9	22.2	17.5	25.4	22.2	25.4
1.52 and under		11.1	28.6	12.7	31.8	15.9	34.9
Over 1.52 to 2.13, incl	Over 9.14 to 12.19	12.7	31.8	15.9	34.9	19.0	38.1
Over 2.13 to 2.74, incl		14.3	31.8	19.0	34.9	22.2	38.1
Over 2.74		19.0	34.9	22.2	38.1	25.4	41.3
1.52 and under		11.1	31.8	12.7	38.1	15.9	41.3
Over 1.52 to 2.13, incl	Over 12.19 to 15.24	12.7	34.9	15.9	38.1	19.0	41.3
Over 2.13 to 2.74, incl		15.9	34.9	19.0	38.1	22.2	41.3
Over 2.74		19.0	38.1	22.2	41.3	25.4	44.4
1.52 and under		12.7	44.4	15.9	47.6	19.0	47.6
Over 1.52 to 2.13, incl	Over 15.24	15.9	44.4	19.0	47.6	22.2	47.6
Over 2.13 to 2.74, incl		15.9	44.4	19.0	47.6	22.2	47.6
Over 2.74		22.2	44.4	25.4	50.8	28.6	57.2

[A] The tolerance under specified width and length is 1/4 in. (6.35 mm).

[B] Rectangular plates over 1 in. (25.4 mm) in thickness are not commonly sheared and are machined or otherwise cut to length and width or produced in the size as rolled, uncropped.

TABLE 16
CAMBER TOLERANCES FOR PLATES

Maximum camber[A] = 1/8 in. (3.2 mm) in any 5 ft (1.5 m)

[A] Camber is the deviation of a side edge from a straight line, and measurement is taken by placing a 5-ft (1.5-m) straightedge on the concave side and measuring the greatest distance between the plate and the straightedge.

TABLE 17
DIAMETER TOLERANCES FOR CIRCULAR PLATES

Specified Diameter, in. (m)	Tolerance Over Specified Diameter for Given Diameter and Thickness (No Tolerance Under), in. (mm)		
	To 3/8 (9.5), excl in Thickness	3/8 to 5/8 (9.5 to 15.9), excl, in Thickness	5/8 (15.9) and Over in Thickness[A]
To 60, (1.5), excl	1/4 (6.4)	3/8 (9.5)	1/2 (12.7)
60 to 84 (1.5 to 2.1), excl	5/16 (7.9)	7/16 (11.1)	9/16 (14.3)
84 to 108 (2.1 to 2.7), excl	3/8 (9.5)	1/2 (12.7)	5/8 (15.9)
108 to 130 (2.7 to 3.3), excl	7/16 (11.1)	9/16 (14.3)	11/16 (17.5)

[A] Circular and sketch plates over 5/8 in. (15.9 mm) in thickness are not commonly sheared and are machined or otherwise cut.

TABLE 18
FLATNESS TOLERANCES FOR ANNEALED PLATES

Specified Thickness, in.	Flatness Tolerance (Deviation from a Horizontal Flat Surface), for Thicknesses and Width Given, in.								
	Width, in.								
	48 and Under	Over 48 to 60, excl	60 to 72, excl	72 to 84, excl	84 to 96, excl	96 to 108, excl	108 to 120, excl	120 to 144, excl	144 and Over
3/16 to 1/4, excl	3/4	1 1/16	1 1/4	1 3/8	1 5/8	1 5/8	1 7/8	2	...
1/4 to 3/8, excl	11/16	3/4	15/16	1 1/8	1 3/8	1 7/16	1 9/16	1 7/8	...
3/8 to 1/2, excl	1/2	9/16	11/16	3/4	15/16	1 1/8	1 1/4	1 7/16	1 3/4
1/2 to 3/4, excl	1/2	9/16	5/8	5/8	13/16	1 1/8	1 1/8	1 1/8	1 3/8
3/4 to 1, excl	1/2	9/16	5/8	5/8	3/4	13/16	15/16	1	1 1/8
1 to 1 1/2, excl	1/2	9/16	9/16	9/16	11/16	11/16	11/16	3/4	1
1 1/2 to 4, excl	3/16	5/16	3/8	7/16	1/2	9/16	5/8	3/4	7/8
4 to 6, excl	1/4	3/8	1/2	9/16	5/8	3/4	7/8	1	1 1/8

Specified Thickness, mm	Flatness Tolerance (Deviation from a Horizontal Flat Surface) for Thicknesses and Width Given, mm								
	Width, mm								
	1.2 and Under	Over 1.2 to 1.5, excl	1.5 to 1.8, excl	1.8 to 2.1, excl	2.1 to 2.4, excl	2.4 to 2.7, excl	2.7 to 3.0, excl	3.0 to 3.6, excl	3.6 and Over
4.8 to 6.4, excl	19.0	27.0	31.8	34.9	41.3	41.3	47.6	50.8	...
6.4 to 9.5, excl	17.5	19.0	23.8	28.6	34.9	36.5	39.7	47.6	...
9.5 to 12.7, excl	12.7	14.3	17.5	19.0	23.8	28.6	31.8	36.5	44.4
12.7 to 19.0, excl	12.7	14.3	15.9	15.9	20.6	28.6	28.6	28.6	34.9
19.0 to 25.4, excl	12.7	14.3	15.9	15.9	19.0	20.6	23.8	25.4	28.6
25.4 to 38.1, excl	12.7	14.3	14.3	14.3	17.5	17.5	17.5	19.0	25.4
38.1 to 101.6, excl	4.8	7.9	9.5	11.1	12.7	14.3	15.9	19.0	22.2
101.6 to 152.4, excl	6.4	9.5	12.7	14.3	15.9	19.0	22.2	25.4	28.6

NOTE 1 — Tolerances in this table apply to plates up to 15 ft. (4.6 m) in length, or to any 15 ft. (4.6 m) of longer plates.

NOTE 2 — If the longer dimension is under 36 in. (0.9 m), the tolerance shall not be greater than 1/4 in. (6.4 mm).

NOTE 3 — The shorter dimenesion specified is considered the width and the flatness deviation across the width shall not exceed the tabular amount for that dimension.

NOTE 4 — The maximum deviation from a horizontal flat surface shall not exceed the tabular tolerance for the longer dimension specified.

Test	ASTM Designation
Chemical Analysis	E 38, E 353[A, B]
Tension	E 8
Brinell Hardness	E 10
Rockwell Hardness	B 18
Hardness Conversion	E 140
Rounding Procedure	E 29
Method of Sampling	E 55

[A] Iron shall be determined arithmetically by difference.

[B] Methods E 38 are to be used only for elements not covered by Test Methods E 353.

12.2 For purposes of determining compliance with the limits in this specification, an observed value or a calculated value shall be rounded as indicated in accordance with the rounding method of Practice of E 29.

Requirements	Rounded Unit for Observed or Calculated Value
Chemical composition hardness and tolerance (when expressed in decimals)	Nearest unit in the last right-hand place of figures of the specified limit
Tensile strength and yield strength	Nearest 1000 psi (7 MPa)
Elongation	Nearest 1

13. Inspection

13.1 Inspection of the material by the purchaser shall be made as agreed upon by the purchaser and the manufacturer as set forth in the purchase contract.

14. Rejection and Rehearing

14.1 *Rejection:*

14.1.1 Any rejection based on tests made by the purchaser in accordance with this specification shall be reported to the manufacturer. Disposition of rejected material shall be a matter of agreement between the manufacturer and purchaser.

14.1.2 Material that shows injurious imperfections subsequent to its acceptance at the manufacturer's works may be rejected and the manufacturer shall be notified.

TABLE 19
RECOMMENDED PLATE FLAME-CUTTING ALLOWANCES TO CLEAN UP IN MACHINING

Specified Thickness, in. (mm)	Machine Allowance per Edge, in. (mm)
2 (50.8) and under	1/4 (6.4)
Over 2 (50.8) to 3 (76.2), incl	3/8 (9.5)
Over 3 (76.2) to 6 (152.4), incl[A]	1/2 (12.7)

[A] Cutting allowance for plates over 6 in. (152.4 mm) thick are not included herein.

Such rejection shall be based only upon inherent imperfections present in the material as received by the purchaser.

14.2 *Rehearing* — Samples tested in accordance with this specification that represent rejected material shall be preserved. In case of dissatisfaction with the results of the test, the manufacturer may make claim for a rehearing.

15. Certification

15.1 A manufacturer's certification that the material was manufactured and tested in accordance with this specification shall be furnished at the time of shipment.

15.2 A copy of the test results shall be furnished at the time of shipment.

16. Product Marking

16.1 Each piece (plate, sheet, strip, or coil) or each container or bundle (where applicable) shall be marked legibly with the specification number, grade, heat number, and the name of the manufacturer. When specified, marking shall be by die stamping on plates 1/4 in. (6.35 mm) or thicker.

17. Keywords

17.1 plate; sheet; strip; UNS N08031; UNS N08904; UNS N08925; UNS N08926; UNS N08932; UNS R20033

SPECIFICATION FOR WELDED NICKEL AND NICKEL-COBALT ALLOY TUBE

SB-626

(Identical with ASTM Specification B 626-03 except that certification has been made mandatory in para. 5.1.6 and Section 9.) 04

1. Scope

1.1 This specification covers welded tubes made from the nickel and nickel-cobalt alloys (UNS N10001, UNS N10242, UNS N10665, UNS N12160, UNS N10629, UNS N10624, UNS N10675, UNS N10276, UNS N06455, UNS N06007, UNS N06975, UNS N08320, UNS N06985, UNS N06002, UNS N06022, UNS N06030, UNS N06058, UNS N06059, UNS N06200, UNS N06210, UNS N08031, UNS R30556, UNS N06230, UNS N06686, and UNS R20033) listed in Table 1 intended for heat exchanger and condenser tubes and tubes for general corrosive service for heat-resisting applications.

1.2 This specification covers tube $\frac{1}{8}$ to $3\frac{1}{2}$ in. (3.2 to 88.9 mm) in outside diameter and 0.015 to 0.148 in. (0.41 to 3.7 mm) inclusive, in wall thickness.

1.3 The values stated in inch-pound units are to be regarded as the standard. The values given in parentheses are for information only.

1.4 *This standard does not purport to address all of the safety concerns, if any, associated with its use. It is the responsibility of the user of this standard to become familiar with all hazards including those identified in the appropriate safety and health practices, and determine the applicability of regulatory limitations prior to use.*

2. Referenced Documents

2.1 *ASTM Standard:*

B 751 Specification for General Requirements for Nickel and Nickel Alloy Welded Tube

3. General Requirements

3.1 Material furnished in accordance with this specification shall conform to the applicable requirements of the current edition of Specification B 751 unless otherwise provided herein.

4. Classification

4.1 Five classes of tube are covered as follows:

4.1.1 *Class IA* — Welded, sized, solution annealed, and nondestructively tested in accordance with 4.2.1.

4.1.2 *Class IB* — Welded, sized, and solution annealed.

4.1.3 *Class IIA* — Welded, cold worked, solution annealed, and nondestructively tested in accordance with 4.2.1.

4.1.4 *Class IIB* — Welded, cold worked, and solution annealed.

4.1.5 *Class III* — Welded, cold worked, solution annealed, and nondestructively tested in accordance with 4.2.2.

4.2 *Nondestructive Tests:*

4.2.1 *Class IA and Class IIA Tubes* — Each finished tube shall be subjected to the hydrostatic test, the pneumatic test, or the eddy current test at the manufacturer's option.

4.2.2 *Class III Tubes* — Each finished tube shall be subjected to the pneumatic test and the eddy current test. Tubes larger than $1\frac{1}{2}$ in. (38.1 mm) in outside diameter may be subjected to the hydrostatic test in lieu of the pneumatic test at the manufacturer's option.

5. Ordering Information

5.1 It is the responsibility of the purchaser to specify all requirements that are necessary for material ordered under this specification. Examples of such requirements

TABLE 1 CHEMICAL REQUIREMENTS

	Composition Limits, %																						
	Ni	Cr	Mo	Fe	W	C	Si, Max	Co	Mn	V	P, Max	S, Max	Ti	Cu	Cb (Nb) +Ta	Al	Zr	La	N	B	Cb (Nb)	Ta	Ni+ Mo	Mg
Ni–Mo Alloys																								
N10001	Rem.[A]	1.0 max	26.0–30.0	4.0–6.0	...	0.05 max	1.0	2.5 max	1.0 max	0.2–0.4	0.04	0.03	...	...	...	...	...	...	...	...	...	...	...	...
N10665	Rem.[A]	1.0 max	26.0–30.0	2.0 max	...	0.02 max	0.10	1.0 max	1.0 max	...	0.04	0.03	...	...	...	...	...	...	...	...	...	...	...	...
N10675	65.0 min	1.0–3.0	27.0–32.0	1.0–3.0	3.0 max	0.01 max	0.10	3.0 max	3.0 max	0.20 max	0.030	0.010	0.20 max	0.20 max	...	0.50 max	0.10 max	...	...	...	0.20 max	0.20 max	94.0–98.0	...
N10629	Rem.[A]	0.5–1.5	26.0–30.0	1.0–6.0	...	0.01 max	0.05	2.5 max	1.5 max	...	0.04	0.01	...	0.5 max	...	0.1–0.5	...	...	...	...	...	...	...	...
N10624	Rem.[A]	6.0–10.0	21.0–25.0	5.0–8.0	...	0.01 max	0.10	1.0 max	1.0 max	...	0.025	0.01	...	0.5 max	...	...	...	...	...	...	...	...	...	...
Ni–Mo–Cr–Fe Alloy																								
N10242	Rem.[A]	7.0–9.0	24.0–26.0	2.0 max	...	0.03 max	0.80	1.00 max	0.80 max		0.030	0.015	...	0.50 max	...	0.50 max	...	...	...	0.006 max	...	...	...	...
Low C Ni–Mo–Cr Alloys																								
N10276	Rem.[A]	14.5–16.5	15.0–17.0	4.0–7.0	3.0–4.5	0.010 max	0.08	2.5 max	1.0 max	0.35 max	0.04	0.03	...	...	...	...	...	...	...	...	...	...	...	...
N06022	Rem.[A]	20.0–22.5	12.5–14.5	2.0–6.0	2.5–3.5	0.015 max	0.08	2.5 max	0.5 max	0.35 max	0.02	0.02	...	...	...	...	...	...	...	...	...	...	...	...
N06455	Rem.[A]	14.0–18.0	14.0–17.0	3.0 max	...	0.015 max	0.08	2.0 max	1.0 max	...	0.04	0.03	0.70 max	...	...	...	...	...	...	...	...	...	...	...
Ni–Cr–Fe–Mo–Cu Alloys	...	...	...	...	...	...	...	...	...															
N06007	Rem.[A]	21.0–23.5	5.5–7.5	18.0–21.0	1.0 max	0.05 max	1.0	2.5 max	1.0–2.0	...	0.04	0.03	...	1.5–2.5	1.75–2.5	...	...	...	...	...	...	...	...	...
N06975	47.0–52.0	23.0–26.0	5.0–7.0	Rem.[A]	...	0.03 max	1.0	...	1.0 max	...	0.03	0.03	0.70–1.50	0.70–1.20	...	...	...	...	...	...	...	...	...	...
N06985	Rem.[A]	21.0–23.5	6.0–8.0	18.0–21.0	1.5 max	0.015 max	1.0 max	5.0 max	1.0 max	...	0.04	0.03	...	1.5–2.5	0.50 max	...	...	...	...	...	...	...	...	...
N06030	Rem.[A]	28.0–31.5	4.0–6.0	13.0–17.0	1.5–4.0	0.03 max	0.8	5.0 max	1.5 max	...	0.04	0.02	...	1.0–2.4	0.30–1.50	...	...	...	...	...	...	...	...	...
Ni–Fe–Cr–Mo Alloys																								
N08320	25.0–27.0	21.0–23.0	4.0–6.0	Rem.[A]	...	0.05 max	1.0	...	2.5 max	...	0.04	0.03	4×C min	...	...	...	...	...	...	...	...	...	...	...
Ni–Cr–Mo–Fe Alloy																								
N06002	Rem.[A]	20.5–23.0	8.0–10.0	17.0–20.0	0.20–1.0	0.05–0.15	1.0	0.5–2.5	1.0 max	...	0.04	0.03	...	...	...	...	...	...	...	...	...	...	...	...
Ni–Fe–Cr–Co Alloy																								
R30556	19.0–22.5	21.0–23.0	2.5–4.0	Rem.[A]	2.0–3.5	0.05–0.15	0.20–0.80	16.0–21.0	0.50–2.00	...	0.03	0.015	...	...	...	0.10–0.50	0.001–0.10	0.005–0.10	0.10–0.30	0.02 max	0.30 max	0.3–1.25	...	...

TABLE 1 CHEMICAL REQUIREMENTS (CONT'D)

	Composition Limits, %																						
	Ni	Cr	Mo	Fe	W	C	Si, Max	Co	Mn	V	P, Max	S, Max	Ti	Cu	Cb (Nb) +Ta	Al	Zr	La	N	B	Cb (Nb)	Ta	Ni+ Mo	Mg
Ni–Cr–W–Mo Alloy N06230	Rem.[A]	20.0–24.0	1.0–3.0	3.0 max	13.0–15.0	0.05–0.15	0.25–0.75	5.0 max	0.30–1.00	...	0.03	0.015	...	...	...	0.20–0.50	...	0.005–0.050	...	0.015 max	...	...	...	
Low C–Ni–Cr–Mo Alloy N06058	balance	20.0–23.0	19.0–21.0	1.5 max	0.3 max	0.010 max	0.10 max	0.3 max	0.50 max		0.015	0.010	...	0.50 max	...	0.40 max			0.02–0.15					
N06059	balance	22.0–24.0	15.0–16.5	1.5 max	...	0.010 max	0.010	0.3 max	0.5 max	...	0.015	0.010	...	0.50 max	...	0.1–0.4	...	...	...	...	...	...	...	...
Low C–Ni–Cr–Mo–Cu Alloy N06200	Rem.[A]	22.0–24.0	15.0–17.0	3.0 max	...	0.010 max	0.08	2.0 max	0.50 max	...	0.025	0.010	...	1.3–1.9	...	0.50 max	...	...	...	...	...	...	...	...
Low C–Ni–Fe–Cr–Mo–Cu Alloy N08031	30.0–32.0	26.0–28.0	6.0–7.0	balance	...	0.015 max	0.3	...	2.0 max	...	0.020	0.010	...	1.0–1.4	...	...	...	...	0.15–0.25	...	...	...	...	...
Low C–Ni–Cr–Mo–W Alloy N06686	Rem.[A]	19.0–23.0	15.0–17.0	5.0 max	3.0–4.4	0.010 max	0.08	...	0.75 max	...	0.04	0.02	0.02–0.25	...	...	...	...	...	...	...	...	...	...	...
Ni–Co–Cr–Si Alloy N12160	Rem.[A]	26.0–30.0	1.0 max	3.5 max	1.0 max	0.15 max	2.4–3.0	27.0–33.0	1.5 max	...	0.030	0.015	0.20–0.80	...	...	...	...	...	...	...	1.0 max	...	...	...
Cr–Ni–Fe–N Alloy R20033	30.0–33.0	31.0–35.0	0.50–2.0	balance	...	0.015 max	0.050	...	2.0 max	...	0.02	0.01	...	0.3–1.20	...	...	...	...	0.35–0.60	...	...	...	...	...
Low C–Ni–Mo–Cr–Ta Alloy N06210	Rem.[A]	18.0–20.0	18.0–20.0	1.0 max	...	0.015 max	0.08	1.0 max	0.5	0.35 max	0.02	0.02	...		...	...	...	...	...	...	...	1.5–2.2	...	...

GENERAL NOTE: Rem. = Remainder

include, but are not limited to the following:

5.1.1 *Alloy* (Table 1),

5.1.2 *Class* (see 4),

5.1.3 *Quantity* (feet or number of lengths),

5.1.4 *Size* (outside diameter and average wall thickness),

5.1.5 *Length* (cut or random),

5.1.6 *Certification* — Certification and a report of test results are required,

5.1.7 *Purchaser Inspection* — State which tests or inspections are to be witnessed,

5.1.8 *Ends* — Plain ends cut and deburred will be furnished, unless otherwise specified, and

5.1.9 *Samples for Product (Check) Analysis* — State whether samples shall be furnished.

6. Materials and Manufacture

6.1 The tubes shall be made from flat–rolled alloy by an automatic welding process with no addition of filler metal.

6.2 Subsequent to welding and prior to final heat treatment, Class II and Class III tubes shall be cold worked either in both weld and base metal or in weld metal only. The method and amount of cold working may be specified by the purchaser. When cold drawn, the purchaser may specify the minimum amount of reduction in cross–sectional area or wall thickness, or both.

6.3 All tubes shall be furnished in the solution annealed and descaled condition. When atmosphere control is used, descaling is not necessary.

7. Chemical Composition

7.1 The material shall conform to the requirements for chemical composition prescribed in Table 1. One test is required for each lot as defined in Specification B 751.

7.2 If a product (check) analysis is performed by the purchaser, the material shall conform to the requirements specified in Table 1 subject to permissible variations specified in Specification B 751.

8. Mechanical Properties and Other Requirements

8.1 *Mechanical Properties* — The material shall conform to the mechanical properties prescribed in Table 2. One test is required for each lot as defined in Specification B 751.

8.2 *Flattening Test Requirements:*

8.2.1 Evidence of laminated or unsound material or of incomplete weld that is revealed during the entire flattening test shall be cause for rejection.

8.2.2 Surface imperfections in the test specimens before flattening, but revealed during the flattening test, shall be judged in accordance with the finish requirements.

8.2.3 Superficial ruptures resulting from surface imperfections shall not be cause for rejection.

8.2.4 One test is required for each lot as defined in Specification B 751.

8.3 *Flange Test Requirements:*

8.3.1 Flange test specimens shall show no cracking or flaws. Superficial ruptures resulting from surface imperfections shall not be cause for rejection.

8.3.2 For tube less than 0.093 in. (2.36 mm) in inside diameter and tube having a wall thickness equal to or greater than the inside diameter, the flange test shall not be required.

8.3.3 One test is required for each lot as defined in Specification B 751.

8.4 *Hydrostatic Test* — When tested by the manufacturer, each tube shall be subjected to the hydrostatic test per Specification B 751.

8.5 *Pneumatic Test* — When tested by the manufacturer, each tube shall be subjected to the pneumatic test per Specification B 751.

8.6 *Eddy Current Test* — When tested by the manufacturer, each tube shall be subjected to an electromagnetic (eddy current) test per Specification B 751.

9. Certification

9.1 A manufacturer's certification shall be furnished to the purchaser stating that the material has been manufactured, tested, and inspected in accordance with this specification, and that the test results on representative samples meet specification requirements. A report of the test results shall be furnished.

10. Keywords

10.1 UNS N10001; UNS N10242; UNS N10665; UNS N12160; UNS N10629; UNS N10624; UNS

N10675; UNS N10276; UNS N06455; UNS N06007; UNS N06975; UNS N08320; UNS N06985; UNS N06002; UNS N06022; UNS N06030; UNS N06058; UNS N06059; UNS N06200; UNS N06210; UNS N08031; UNS N06230; UNS N06686; UNS R30556; UNS R20033; welded tube

TABLE 2 MECHANICAL PROPERTIES

Alloy	Tensile Strength, min, ksi (MPa)	Yield Strength (0.2 Offset) min, ksi (MPa)	Elongation in 2 in. (50.8 mm) or 4D[A], min,%
Ni–Mo			
UNS N10001	100 (690)	45 (310)	40
UNS N10665	110 (760)	51 (350)	40
UNS N10675	110 (760)	51 (350)	40
UNS N10629	110 (760)	51 (350)	40
UNS N10624	104 (720)	46 (320)	40
Ni–Mo–Cr–Fe			
UNS N10242	105 (725)	45 (310)	40
Low C Ni–Mo–Cr			
UNS N10276	100 (690)	41 (283)	40
UNS N06022	100 (690)	45 (310)	45
UNS N06455	100 (690)	40 (276)	40
Ni–Cr–Fe–Mo–Cu			
UNS N06007	90 (621)	35 (241)	35
UNS N06975	85 (586)	32 (221)	40
UNS N06985	90 (621)	35 (241)	45
UNS N06030	85 (586)	35 (241)	30
Ni–Fe–Cr–Mo			
UNS N08320	75 (517)	28 (193)	35
Ni–Cr–Mo–Fe			
UNS N06002	100 (690)	40 (276)	35
Ni–Fe–Cr–Co			
UNS R30556	100 (690)	45 (310)	40
Ni–Cr–W–Mo			
UNS N06230[B]	110 (760)	45 (310)	40
Low C–Ni–Cr–Mo			
UNS N06058	110 (760)	52 (360)	40
UNS N06059	100 (690)	45 (310)	45
Low C–Ni–Cr–Mo–Cu			
UNS N06200	100 (690)	41 (283)	45
Low C–Ni–Fe–Cr–Mo–Cu			
UNS N08031	94 (650)	40 (276)	40
Low C–Ni–Cr–Mo–W			
UNS N06686	100 (690)	45 (310)	45
Ni–Co–Cr–Si			
UNS N12160	90 (620)	35 (240)	40
Low C–Cr–Ni–Fe–N			
UNS R20033	109 (750)	55 (380)	40
Low C–Ni–Mo–Cr–Ta			
UNS N06210	100 (690)	45 (310)	45

[A] *D* refers to the diameter of the tension specimen.

[B] Solution annealed at a minimum temperature of 2200° F (1204° C) followed by a water quench or rapidly cooled by other means.

APPENDIX

(Nonmandatory Information)

X1. HEAT TREATMENT

X1.1 Proper heat treatment during or subsequent to fabrication is necessary for optimum performance and the manufacturer shall be consulted for details.

SPECIFICATION FOR PRECIPITATION-HARDENING NICKEL ALLOY BARS, FORGINGS, AND FORGING STOCK FOR HIGH-TEMPERATURE SERVICE

SB-637

(Identical with ASTM Specification B 637-93a)

1. Scope

1.1 This specification covers hot- and cold-worked precipitation-hardenable nickel alloy rod, bar, forgings, and forging stock for high-temperature service (Table 1).

1.2 The values stated in inch-pound units are to be regarded as the standard. The values given in parentheses are for information only.

2. Referenced Documents

2.1 *ASTM Standards:*

E 8 Test Methods of Tension Testing of Metallic Materials

E 29 Practice for Using Significant Digits in Test Data to Determine Conformance With Specifications

E 38 Methods for Chemical Analysis of Nickel-Chromium and Nickel-Chromium-Iron Alloys

E 139 Practice for Conducting Creep Creep-Rupture, and Stress-Rupture Tests of Metallic Materials

E 354 Test Methods for Chemical Analysis of High-Temperature, Electrical, Magnetic, and Other Similar Iron, Nickel, and Cobalt Alloys

3. Terminology

3.1 *Descriptions of Terms Specific to This Standard:*

3.1.1 *bar* — material of rectangular (flats), hexagonal, octagonal, or square solid section in straight lengths.

3.1.2 *rod* — material of round solid section furnished in straight lengths.

4. Ordering Information

4.1 Orders for material under this specification shall include the following information:

4.1.1 Alloy (Table 1).

4.1.2 Condition (temper) (Table 4).

4.1.3 Shape — Rod or bar (round, rectangle, square, hexagon, octagon).

4.1.3.1 Forging (sketch or drawing).

4.1.4 Dimensions, including length.

4.1.5 Quantity (mass or number of pieces).

4.1.6 Forging Stock — Specify if material is stock for reforging.

4.1.7 Finish.

4.1.8 Certification — State if certification is required (Section 15).

4.1.9 Samples for Product (Check) Analysis — Whether samples for product (check) analysis shall be furnished (9.2).

4.1.10 Purchaser Inspection — If the purchaser wishes to witness tests or inspection of material at the place of manufacture, the purchase order must so state indicating which tests or inspections are to be witnessed (Section 13).

5. Chemical Composition

5.1 The material shall conform to the requirements as to chemical composition prescribed in Table 1.

5.2 If a product (check) analysis is performed by the purchaser, the material shall conform to the product (check) analysis variations prescribed in Table 1.

6. Mechanical Properties

6.1 *Tensile and Hardness Requirements* — The material shall conform to the requirements for tensile and

TABLE 1
CHEMICAL REQUIREMENTS

Element	Composition Limits, %	Product (Check) Analysis Variations, Under min or Over max, of the Specified Limit of Element	Composition Limits, %	Product (Check) Analysis Variations, Under min or Over max, of the Specified Limit of Element
	UNS N07252 (Formerly Grade 689)		UNS N07001 (Formerly Grade 685)	
Carbon	0.10–0.20	0.01	0.03–0.10	0.01
Manganese	0.50 max	0.03	1.00 max	0.03
Silicon	0.50 max	0.03	0.75 max	0.05
Phosphorus	0.015 max	0.005	0.030 max	0.005
Sulfur	0.015 max	0.003	0.030 max	0.005
Chromium	18.00–20.00	0.25	18.00–21.00	0.25
Cobalt	9.00–11.00	0.10 under min, 0.15 over max	12.00–15.00	0.15
Molybdenum	9.00–10.50	0.15	3.50–5.00	0.10
Titanium	2.25–2.75	0.07	2.75–3.25	0.07
Aluminum	0.75–1.25	0.10	1.20–1.60	0.10
Zirconium	...	...	0.02–0.12	0.01 under min, 0.02 over max
Boron	0.003–0.01	0.002	0.003–0.01	0.002
Iron	5.00 max	0.07	2.00 max	0.05
Copper	...	...	0.50 max	0.03
Nickel	Remainder[A]	...	Remainder[A]	...
	UNS N07500 (Formerly Grade 684)		UNS N07750 (Formerly Grade 688)	
Carbon	0.15 max	0.01	0.08 max	0.01
Manganese	0.75 max	0.03	1.00 max	0.03
Silicon	0.75 max	0.05	0.50 max	0.03
Phosphorus	0.015 max	0.005	...	...
Sulfur	0.015 max	0.003	0.01 max	0.003
Chromium	15.00–20.00	0.15 under min, 0.25 over max	14.00–17.00	0.15 under min, 0.25 over max
Cobalt	13.00–20.00	0.15 under min, 0.20 over max	1.00 max[B]	0.03
Molybdenum	3.00–5.00	0.10	...	...
Columbium (Nb) + tantalum	...	...	0.70–1.20	0.05
Titanium	2.50–3.25	0.07	2.25–2.75	0.07
Aluminum	2.50–3.25	0.20	0.40–1.00	0.05 under min, 0.10 over max
Boron	0.003–0.01	0.002	...	...
Iron	4.00 max	0.07	5.00–9.00	0.10
Copper	0.15 max	0.02	0.50 max	0.03
Nickel	Remainder[A]	...	70.00 min	0.45
	UNS N07718 (Formerly Grade 718)		UNS N07080 (Formerly Grade 80A)	
Carbon	0.08 max	0.01	0.10 max	0.01
Manganese	0.35 max	0.03	1.00 max	0.03
Silicon	0.35 max	0.03	1.00 max	0.05
Phosphorus	0.015 max	0.005	...	...
Sulfur	0.015 max	0.003	0.015 max	0.003
Chromium	17.0–21.0	0.25	18.00–21.00	0.25
Cobalt[B]	1.0 max	0.03	...	...
Molybdenum	2.80–3.30	0.05 under min, 0.10 over max	...	...
Columbium (Nb) + tantalum	4.75–5.50	0.15 under min, 0.20 over max	...	...
Titanium	0.65–1.15	0.04 under min, 0.05 over max	1.80–2.70	0.05 under min, 0.07 over max
Aluminum	0.20–0.80	0.05 under min, 0.10 over max	0.50–1.80	0.05 under min, 0.10 over max
Boron	0.006 max	0.002	...	...
Iron	Remainder[A]	...	3.00 max	0.07
Copper	0.30 max	0.03	...	...
Nickel	50.0–55.0	0.35	Remainder[A]	...
	UNS N07752			
Carbon	0.020–0.060	0.01		
Manganese	1.00 max	0.03		
Silicon	0.50 max	0.03		
Phosphorus	0.008 max	0.003		
Sulfur	0.003 max	0.001		
Chromium	14.50–17.00	0.15 under min, 0.25 over max		
Cobalt	0.050 max	0.03		
Columbium + tantalum	0.70–1.20	0.05		
Titanium	2.25–2.75	0.07		
Aluminum	0.40–1.00	0.05 under min, 0.10 over max		
Boron	0.007 max	0.002		
Iron	5.00–9.00	0.10		
Copper	0.50 max	0.03		
Zirconium	0.050 max	0.01		
Vanadium	0.10 max	0.01		
Nickel	70.0 min	0.45		

[A] The element shall be determined arithmetically by difference.
[B] If determined.

hardness properties prescribed in Table 2.

6.2 *Stress-Rupture Requirements* — The material shall conform to the requirements for stress-rupture properties prescribed in Table 3.

7. Dimensions and Permissible Variations

7.1 *Diameter, Thickness, or Width* — The permissible variations from the specified dimensions of cold-worked rod and bar shall be as prescribed in Table 5, and of hot-worked rod and bar as prescribed in Table 6.

7.1.1 *Out of Round* — Cold-worked and hot-worked rod, all sizes, in straight lengths, shall not be out-of-round by more than one half the total permissible variations in diameter shown in Tables 5 and 6, except for hot-worked rod ½ in. (12.7 mm) and under, which may be out-of-round by the total permissible variations in diameter shown in Table 6.

7.1.2 *Corners* — Cold-worked bar shall have practically exact angles and sharp corners.

7.1.3 *Cut Lengths* — A specified length to which all rod and bar will be cut with a permissible variation of +⅛ in. (3.18 mm), −0 for sizes 8 in. (203 mm) and less in diameter or the distance between parallel surfaces. For larger sizes, the permissible variation shall be + ¼ in. (6.35 mm), −0.

7.1.4 *Straightness for Cold-Worked and Hot-Worked Rod and Bar* — The maximum curvature (depth of chord) shall not exceed 0.050 in. multiplied by the length in feet (0.04 mm) multiplied by the length in centimeters. Material under ½ in. (12.7 mm) in diameter or the distance between parallel surfaces shall be reasonably straight and free of sharp bends and kinks.

7.1.5 For forgings, dimensions and tolerances shall be as specified on the order, sketch, or drawing.

7.1.6 Dimensions and tolerances for forging stock shall be as agreed upon between the purchaser and the manufacturer.

8. Workmanship, Finish, and Appearance

8.1 The material shall be uniform in quality and condition, smooth, commercially straight or flat, and free of injurious imperfections.

9. Sampling

9.1 *Lot* — Definitions:

9.1.1 A lot for chemical analysis shall consist of one heat.

9.1.2 *Mechanical Properties* — A lot for tension, hardness, and stress-rupture testing shall consist of all material from the same heat, nominal diameter or thickness, or forging size, and condition (temper).

9.1.2.1 For forging stock, a lot shall consist of one heat.

9.1.2.2 Where material cannot be identified by heat, a lot shall consist of not more than 500 lb (227 kg) of material in the same size and condition (temper).

9.2 *Test Material Selection:*

9.2.1 *Chemical Analysis* — Representative samples shall be taken during pouring or subsequent processing.

9.2.1.1 Product (Check) Analysis shall be wholly the responsibility of the purchaser.

9.2.2 *Mechanical Properties* — Samples of the material to provide test specimens for mechanical properties shall be taken from such locations in each lot as to be representative of that lot.

10. Number of Tests

10.1 Chemical Analysis — One test per lot.

10.2 Tension — One test per lot.

10.3 Hardness — One test per lot.

10.4 Stress-Rupture — One test per lot.

11. Specimen Preparation

11.1 *Rod and Bar:*

11.1.1 Tension test specimens shall be taken from material in the final condition (temper) and tested in the direction of fabrication.

11.1.2 All rod and bar shall be tested in full cross-section size when possible. When a full cross-section size test cannot be performed, the largest possible round specimen shown in Test Methods E 8 shall be used. Longitudinal strip specimens shall be prepared in accordance with Test Methods E 8 for rectangular bar up to ½ in. (12.7 mm), inclusive, in thickness, which are too wide to be pulled full size.

11.1.3 Forging stock test specimens shall be taken from a forged-down coupon or a sample taken directly from stock.

11.2 *Forgings:*

11.2.1 The tension test specimen representing each lot shall be taken from a forging or from a test prolongation.

TABLE 2
TENSILE AND HARDNESS REQUIREMENTS[A]

Alloy	Heat Treatment	Tensile Strength, min, psi (MPa)	Yield Strength (0.2% offset) min, psi (MPa)	Elongation in 2 in. (50 mm) or 4*D*, min, %	Reduction of Area, min, %	Brinell Hardness
N07252	solution + precipitation harden	160 000 (1100)	90 000 (620)	20	18	310 min
N07001	solution + stabilize + precipitation harden	160 000 (1100)	110 000 (760)	15[B]	18[B]	310 min
N07500 (rod and bar)	anneal + solution + stabilize + precipitation harden	175 000 (1205)	105 000 (725)	15	15	310 min
N07500 (forgings)	solution + stabilize + precipitation harden	170 000 (1170)	100 000 (690)	20	18	310 min
N07750 Type 1	solution at 2100°F (1149°C) + stabilize + precipitation harden	140 000 (965)	90 000 (620)	8	...	262 min
N07750 Type 2[C]	solution at 1800°F (982°C) + precipitation harden	170 000 (1170)	115 000 (790)	18	18	302 to 363
N07750 Type 2[D]	solution at 1800°F (982°C) + precipitation harden	170 000 (1170)	115 000 (790)	15 (10)[E]	15 (12)[E]	302 to 363
N07750 Type 3	solution anneal at 2000°F (1093°C) + precipitation harden	160 000 (1103), min 185 000 (1276), max	100 000 (689), min 130 000 (896), max	20	20	267–363, Bm 27–40, Rc
N07752 Type 1	solution anneal at 1975°F (1080°C) + precipitation harden	160 000 (1103), min 185 000 (1276), max	100 000 (689), min 130 000 (896), max	20	20	267 to 363, Ba 27 to 40, Rc
N07752 Type 2	solution anneal at 1975°F (1080°C) + precipitation harden	140 000 (965)	85 000 (585)	20	20	...
N07718	solution + precipitation harden	185 000 (1275)	150 000 (1034)	12 (6)[E]	15 (8)[E]	331 min
N07080	solution + stabilization + precipitation harden	135 000 (930)	90 000 (620)	20	...	...

[A] The supplier shall demonstrate that the material will meet fully heat-treated properties after full heat treatment in accordance with Table 4.
[B] Forgings.
[C] Up to 2.50 in. (63.5 mm), exclusive.
[D] 2.50 to 4.00 in. (63.5 to 101.6 mm), exclusive.
[E] These values apply for tension specimens machined tangentially from near the center of large disk forgings over 50 in.^{2} in cross section or radially from rings 3 in. (76.2 mm) or more in thickness.

TABLE 3
STRESS-RUPTURE REQUIREMENTS[A]

Alloy	Heat Treatment	Test Temperature, °F (°C)	Stress, psi (MPa)[B]	Minimum Hours	Elongation in 2 in. or 50 mm (or 4*D*), min, %
N07252	solution + precipitation harden	1500 (816)	30 000 (205)	100	10
N07001	solution + stabilize + precipitation harden	1500 (816)	33 000 (230)	100	5
N07500 (rod and bar)	anneal + solution + stabilize + precipitation harden	1500 (816)	38 000 (260)	100	5
N07500 (forgings)	solution + stabilize + precipitation harden	1500 (816)	38 000 (260)	100	5
N07750 Type 1	solution at 2100°F (1149°C) + stabilize + precipitation harden	1350 (732)	45 000 (310)	100	5 (3 if hours exceed 136)
N07718	solution + precipitation harden	1200 (649)	100 000 (690)	23	5
N07080	solution + stabilize + precipitation harden	1400 (760)	47 000 (325)	23	3.5

[A] The supplier shall demonstrate that the material will meet fully heat-treated properties after full heat treatment in accordance with Table 4.
[B] Test specimens meeting minimum requirements may be overloaded to produce rupture in a reasonable and practical time period.

TABLE 4
HEAT TREATMENT[A]

Alloy	Recommended Annealing Treatment	Recommended Solution Treatment	Recommended Stabilizing Treatment	Precipitation Hardening Treatment
N07252	...	1950 ± 25°F (1066 ± 14°C), hold 4 h, air cool	...	1400 ± 25°F (760 ± 14°C), hold 15 h, air cool or furnace cool
N07001	...	1825 to 1900°F (996 to 1038°C), hold 4 h, oil or water quench	1550 ± 25°F (843 ± 14°C), hold 4 h, air cool	1400 ± 25°F (760 ± 14°C), hold 16 h, air cool or furnace cool
N07500	2150 ± 25°F (1177 ± 14°C), hold 2 h, air cool (bars only)	1975 ± 25°F (1080 ± 14°C), hold 4 h, air cool	1550 ± 25°F (843 ± 14°C), hold 4 h, air cool	1400 ± 25°F (760 ± 14°C), hold 16 h, air cool or furnace cool
N07750 Type 1 (Service above 1100°F) (593°C)	...	2100 ± 25°F (1149 ± 14°C), hold 2 to 4 h, air cool	1550 ± 25°F (843 ± 14°C), hold 4 h, air cool	1300 ± 25°F (704 ± 14°C), hold 20 h, air cool or furnace cool
N07750 Type 2 (Service up to 1100°F) (593°C)	...	1800 ± 25°F (982 ± 14°C), hold ½ h min, cool at rate equivalent to air cool or faster	...	1350 ± 25°F (732 ± 14°C), hold 8 h, furnace cool to 1150 ± 25°F (621 ± 14°C), hold until total precipitation heat treatment has reached 18 h, air cool
N07750 Type 3	...	1975–2050°F (1079–1121°C), hold 1 to 2 h, air cool	...	1300 ± 25°F (704 ± 14°C), hold 20 h, + 4 − 0 h, air cool
N07752 Type 1	...	1975 ± 25°F (1080 ± 14°C), hold 1 to 2 h, cool by water or oil quenching	...	1320 ± 25°F (715 ± 14°C), hold 20 h, + 2 − 0 h, air cool
N07752 Type 2	...	1975 ± 25°F (1080 ± 14°C), hold 1 to 2 h, cool by water or oil quenching	...	1400 ± 25°F (760 ± 14°C), hold 100 h, + 4 − 0 h, air cool
N07718	...	1700 to 1850°F (924 to 1010°C), hold ½ h min, cool at rate equivalent to air cool or faster	...	1325 ± 25°F (718 ± 14°C), hold at temperature for 8 h, furnace cool to 1150 ± 25°F (621 ± 14°C), hold until total precipitation heat treatment time has reached 18 h, air cool
N07080	...	1950 ± 25°F (1066 ± 14°C), hold 8 h, air cool	1560 ± 25°F (849 ± 14°C), hold 24 h, air cool	1290 ± 25°F (699 ± 14°C), hold 16 h, air cool

[A] The purchaser shall designate on the purchase order or inquiry any partial stage of heat treatment required on material to be shipped.

TABLE 5
PERMISSIBLE VARIATIONS IN DIAMETER OR DISTANCE BETWEEN PARALLEL SURFACES OF COLD-WORKED RODS AND BARS

Specified Dimension, in. (mm)[A]	Permissible Variations from Specified Dimension, in. (mm)	
	Plus	Minus
Rods:		
1/16 to 3/16 (1.59 to 4.76), excl	0	0.002 (0.051)
3/16 to 1/2 (4.76 to 12.70), excl	0	0.003 (0.076)
1/2 to 15/16 (12.70 to 23.81), incl	0.001 (0.025)	0.002 (0.051)
Over 15/16 to 1 15/16 (23.81 to 49.2), incl	0.0015 (0.038)	0.003 (0.076)
Over 1 15/16 to 2 1/2 (49.2 to 63.5), incl	0.002 (0.051)	0.004 (0.102)
Bars:		
1/16 to 3/16 (1.59 to 4.76), excl	0	0.002 (0.051)
3/16 to 1/2 (4.76 to 12.7), excl	0	0.003 (0.076)

[A] Dimensions apply to the diameter of rods, to the distance between parallel surfaces of hexagonal, octagonal, and square bar, and separately to width and thickness of rectangular bar.

TABLE 6
PERMISSIBLE VARIATIONS IN DIAMETER OR DISTANCE BETWEEN PARALLEL SURFACES OF HOT-WORKED RODS AND BARS

Specified Dimension, in. (mm)[A]	Permissible Variations from Specified Dimension, in. (mm)	
	+	−
Rod and bar, hot-finished:		
1 (25.4) and under	0.016 (0.406)	0.016 (0.406)
Over 1 to 2 (25.4 to 50.8), incl	0.031 (0.787)	0.016 (0.406)
Over 2 to 4 (50.8 to 101.6), incl	0.047 (1.19)	0.031 (0.787)
Over 4 (101.6)	0.125 (3.18)	0.063 (1.60)
Rod, hot-finished and rough-turned or ground:		
Under 1 (25)	0.005 (0.13)	0.005 (0.13)
1 (25) and over	0.031 (0.79)	0

[A] Dimensions apply to the diameter of rods, to the distance between parallel surfaces of hexagonal, octagonal, and square bar, and separately to width and thickness of rectangular bar.

11.2.2 The axis of the specimen shall be located at any point midway between the center and the surface of solid forgings and at any point midway between the innner and outer surfaces of the wall of hollow forgings, and shall be parallel to the direction of greatest metal flow.

11.2.3 The specimens shall be the largest possible round-type shown in Test Methods E 8.

11.3 Stress-rupture specimens shall be the same as tension specimens except modified as necessary for stress-rupture testing in accordance with Practice E 139.

12. Test Methods

12.1 Determine the chemical composition, mechanical and other properties of the material as enumerated in this specification, in case of disagreement, in accordance with the following methods:

Test	ASTM Designation
Chemical analysis	E 38, E 354[A]
Tension	E 8
Rounding procedure	E 29
Stress-rupture	E 139

[A] Methods E 38 is to be used only for elements not covered by Test Methods E 354.

12.2 For purposes of determining compliance with the specified limits for requirements of the properties

listed in the following table, an observed value or a calculated value shall be rounded in accordance with the rounding method of Practice E 29.

Test	Rounded Unit for Observed or Calculated Value
Chemical composition, tolerances (when expressed in decimals), and hardness	Nearest unit in the last right-hand place of figures of the specified limit. If two choices are possible, as when the digits dropped are exactly a 5 or a 5 followed only by zeros, choose the one ending in an even digit, with zero defined as an even digit.
Tensile strength and yield strength	Nearest 1000 psi (6.9 MPa)
Elongation	Nearest 1%
Rupture life	1 h

13. Inspection

13.1 Inspection of the material shall be made as agreed upon between the manufacturer and the purchaser as part of the purchase contract.

14. Rejection and Rehearing

14.1 Material, tested by the purchaser, that fails to conform to the requirements of this specification may be rejected. Rejection should be reported to the producer or supplier promptly and in writing, in case of dissatisfaction with the results of the test, the producer or supplier may make claim for a rehearing.

15. Certification

15.1 When specified in the purchase order or contract, a producer's or supplier's certification shall be furnished to the purchaser that the material was manufactured, sampled, tested, and inspected in accordance with this specification and has been found to meet the requirements. When specified in the purchase order or contract, a report of the test results shall be furnished.

16. Product Marking

16.1 Each bundle or shipping container shall be marked with the name of the material; condition (temper); this specification number; the size; gross, tare, and net weight; consignor and consignee address; contract or order number; or such other information as may be defined in the contract or order.

SPECIFICATION FOR Ni-Fe-Cr-Mo-Cu LOW-CARBON ALLOY (UNS N08904), Ni-Fe-Cr-Mo-Cu-N LOW-CARBON ALLOYS (UNS N08925, UNS N08031, AND UNS N08926), AND Cr-Ni-Fe-N LOW-CARBON ALLOY (UNS R20033) BAR AND WIRE

SB-649

(Identical with ASTM Specification B 649-95 except that certification has been made mandatory.)

1. Scope

1.1 This specification covers nickel-iron-chromium-molybdenum-copper low-carbon alloys (UNS N08904) and nickel-iron-chromium-molybdenum-copper-nitrogen alloys (UNS N08925, UNS N08031, and UNS N08926), and Cr-Ni-Fe-N low-carbon alloy (UNS R20033) bar and wire.

1.2 The values stated in inch-pound units are to be regarded as the standard. The values given in parentheses are for information only.

2. Referenced Documents

2.1 *ASTM Standards:*

E 8 Test Methods for Tension Testing of Metallic Materials

E 10 Test Method for Brinell Hardness of Metallic Materials

E 18 Test Methods for Rockwell Hardness and Rockwell Superficial Hardness of Metallic Materials

E 29 Practice for Using Significant Digits in Test Data to Determine Conformance With Specifications

E 38 Methods for Chemical Analysis of Nickel-Chromium and Nickel-Chromium-Iron Alloys

E 55 Practice for Sampling Wrought Nonferrous Metals and Alloys for Determination of Chemical Composition

E 140 Hardness Conversion Tables for Metals

F 155 Test Method for Temper of Strip and Sheet Metals for Electronic Devices (Spring-Back Method)

3. Terminology

3.1 *Descriptions of Terms Specific to This Standard:*

3.1.1 *bars* — hot-finished rounds, squares, octagons, and hexagons: $\frac{1}{4}$ in. (6.35 mm) and over in diameter or size. Hot-finished flats: $\frac{1}{4}$ in. to 10 in. (254 mm) inclusive in width, $\frac{1}{8}$ in. (3.18 mm) and over in thickness. Cold-finished rounds, squares, octagons, hexagons, and shapes: over $\frac{1}{2}$ in. (12.70 mm) in diameter or size. Cold-finished flats: $\frac{3}{8}$ in. (9.52 mm) and over in width (see 3.1.1.1) and $\frac{1}{8}$ in. and over in thickness (see 3.1.1.2).

3.1.1.1 *Discussion* — Widths less than $\frac{3}{8}$ in. (9.52 mm) and thicknesses less than $\frac{3}{16}$ in. (4.76 mm) are described generally as flat wire.

3.1.1.2 *Discussion* — Thickness $\frac{1}{8}$ in. to under $\frac{3}{16}$ in. (3.18 mm to under 4.76 mm) can be cold-rolled strip as well as bar.

3.1.2 *wire* — cold-finished only: round, square, octagon, hexagon, and shape wire, $\frac{1}{2}$ in. (12.70 mm) and under in diameter or size. Cold-finished only: flat wire, $\frac{3}{16}$ in. to under $\frac{3}{8}$ in. (4.76 mm to under 9.52 mm) in width, 0.010 to under $\frac{3}{16}$ in. (0.25 to under 4.76 mm) in thickness.

4. Ordering Information

4.1 Orders for material to this specification shall include the following information:

4.1.1 Quantity (weight or number of pieces),

4.1.2 Alloy name or UNS number,

TABLE 1
CHEMICAL REQUIREMENTS

Element	Composition, %				
	UNS N08904	UNS N08925	UNS N08031	UNS N08926	UNS R20033
Carbon, max	0.020	0.020	0.015	0.020	0.015
Manganese, max	2.00	1.00	2.0	2.00	2.0
Phosphorus, max	0.045	0.045	0.020	0.03	0.02
Sulfur, max	0.035	0.030	0.010	0.01	0.01
Silicon, max	1.00	0.50	0.3	0.5	0.50
Nickel	23.00–28.00	24.00–26.00	30.0–32.0	24.00–26.00	30.0–33.0
Chromium	19.00–23.00	19.00–21.00	26.0–28.0	19.00–21.00	31.0–35.0
Molybdenum	4.0–5.0	6.0–7.0	6.0–7.0	6.0–7.0	0.50–2.0
Copper	1.0–2.0	0.8–1.5	1.0–1.4	0.5–1.5	0.30–1.20
Nitrogen	. . .	0.1–0.2	0.15–0.25	0.15–0.25	0.35–0.60
Iron	balance	balance	balance	balance	balance

4.1.3 Form (bar or wire),

4.1.4 Dimensions,

4.1.5 Finish (Section 9),

4.1.6 ASTM designation and year of issue,

4.1.7 Exceptions to the specification or special requirements, and

4.1.8 Certification (Section 16). Certification is required.

5. Materials and Manufacture

5.1 *Heat Treatment* — The material shall be supplied in the solution-treated condition except as noted below in 5.2.

NOTE 1 — The recommended heat treatment shall consist of heating to a temperature of 1920 to 2100°F (1050 to 1150°C) followed by water quenching for UNS N08904, 2010 to 2100°F (1100-1150°C) followed by water quenching for UNS N08925, UNS N08031, and UNS N08926, or 2010 to 2150°F (1100 to 1180°C) followed by water quenching or fast air cool for UNS R20033.

5.2 The heat treatment shall be waived for forging quality material.

6. Chemical Composition

6.1 The material sampled in accordance with 9.2 shall conform to the requirements as to chemical composition prescribed in Table 1.

6.2 *Product Analysis (Formerly Check Analysis)* — Product analysis may be made by the purchaser to verify the identity of the finished material representing each heat or lot. Such analysis may be made by any of the commonly accepted methods that will positively identify the material.

6.2.1 If a product analysis is made, the material shall conform to the requirements as to the composition limits with the product analysis variation prescribed in Table 2.

7. Mechanical and Other Requirements

7.1 *Tensile and Hardness Requirements* — The material shall conform to the requirements as to the mechanical property prescribed in Table 3.

8. Dimensions, Weights, and Permissible Variations

8.1 *Bar* — The material referred to as bar shall conform to the variations in dimensions prescribed in Tables 4 to 12, inclusive, as applicable.

8.2 *Wire* — The material referred to as wire shall conform to the permissible variations in dimensions prescribed in Tables 13 to 17 inclusive, as applicable.

9. Workmanship, Finish, and Appearance

9.1 The material shall be uniform in quality and condition, smooth, commercially straight or flat, and free of injurious defects.

9.2 Bars in the hot-finished condition may be furnished with one of the following finishes:

9.2.1 Scale not removed,

9.2.2 Pickled or descaled, or

9.2.3 Turned (rounds only).

9.3 Bars in the cold-finished condition may be furnished with one of the following finishes:

9.3.1 Cold-drawn,

TABLE 2
PRODUCT ANALYSIS TOLERANCES

Element	Tolerances Over the Max Limit or Under the Min Limit, %			
	UNS N08904 UNS N08925	UNS N08031	UNS N08926	UNS R20033
Carbon	0.005	0.005	0.005	0.005
Manganese	0.04	0.04	0.04	0.04
Phosphorus	0.005	0.005	0.005	0.005
Sulfur	0.005	0.003	0.003	0.003
Silicon	0.05	0.03	0.03	0.03
Chromium	0.20	0.30	0.25	0.30
Nickel	0.20	0.30	0.25	0.30
Molybdenum	0.10	0.15	0.15	0.05
Copper	0.10	0.04	0.04	0.04
Nitrogen	. . .	0.01	0.01	0.03

TABLE 3
MECHANICAL PROPERTY REQUIREMENTS[A]

Alloy	Cold Finished and Hot Finished Annealed, All Sizes			
	Tensile Strength, min, psi (MPa)	Yield Strength min, psi (MPa)	Elongation in 2 in. (50.8 mm), min, %	Forging Quality, All Sizes
UNS N08904	71 000 (490)	31 000 (220)	35	[B]
UNS N08925	87 000 (600)	43 000 (300)	40	[B]
UNS N08031	94 000 (650)	40 000 (270)	40	[B]
UNS N08926	94 000 (650)	43 000 (295)	35	[B]
UNS R20033	109 000 (750)	55 000 (380)	40	[B]

[A] For wire only, tensile strength 90 000 to 120 000 psi (620 to 830 MPa).
[B] No tensile properties are required on forging quality.

9.3.2 Centerless ground (rounds only), or

9.3.3 Polished (rounds only).

9.4 Wire in the cold-finished condition may be furnished with one of the following finishes:

9.4.1 Cold-drawn,

9.4.2 Centerless ground (rounds only),

9.4.3 Polished (rounds only), or

9.4.4 Pickled.

10. Sampling

10.1 *Lots for Chemical Analysis and Mechanical Testing:*

10.1.1 A lot for chemical analysis shall consist of one heat.

10.1.2 A lot for testing and inspection purposes shall consist of material from one heat of the same condition (temper), finish, and cross section, and in no case more than 30 000 lb (13 600 kg) in mass.

NOTE 2 — Where material cannot be identified by heat, a lot shall consist of not more than 500 lb (227 kg) of material in the same thickness and condition, except that for pieces weighing over 500 lb, only one specimen shall be taken.

10.2 *Sampling for Chemical Analysis:*

10.2.1 A representative sample shall be taken from each heat during pouring or subsequent processing.

10.2.2 If the manufacturer determines that the material meets the chemical requirements during pouring or subsequent processing, he shall not be required to sample and analyze the finished product.

10.2.3 Product analysis, if performed, shall be wholly the responsibility of the purchaser.

10.3 *Sampling for Mechanical Tests:*

10.3.1 A sample of the material to provide test specimens for mechanical tests shall be taken from such a location in each lot as to be representative of that lot.

10.3.2 When samples are to be taken after delivery, the purchaser of material ordered to cut lengths may

TABLE 4
PERMISSIBLE VARIATIONS IN SIZE OF HOT-FINISHED ROUND AND SQUARE BARS

	Permissible Variations from Specified Size, in. (mm)		Out-of-Round[A] or Out-of-Square,[B] in. (mm)
	Over	Under	
1/4 (6.35) to 5/16 (7.94), incl[C,D]	[E]	[E]	[E]
Over 5/16 (7.94) to 7/16 (11.11), incl[C,D]	0.006 (0.15)	0.006 (0.15)	0.009 (0.23)
Over 7/16 (11.11) to 5/8 (15.88), incl[C,D]	0.007 (0.18)	0.007 (0.18)	0.010 (0.25)
Over 5/8 (15.88) to 7/8 (22.22), incl	0.008 (0.20)	0.008 (0.20)	0.012 (0.30)
Over 7/8 (22.22) to 1 (25.40), incl	0.009 (0.23)	0.009 (0.23)	0.013 (0.33)
Over 1 (25.40) to 1 1/8 (28.58), incl	0.010 (0.25)	0.010 (0.25)	0.015 (0.38)
Over 1 1/8 (28.58) to 1 1/4 (31.75), incl	0.011 (0.28)	0.011 (0.28)	0.016 (0.41)
Over 1 1/4 (31.75) to 1 3/8 (34.92), incl	0.012 (0.30)	0.012 (0.30)	0.018 (0.46)
Over 1 3/8 (34.92) to 1 1/2 (38.10), incl	0.014 (0.36)	0.014 (0.36)	0.021 (0.53)
Over 1 1/2 (38.10) to 2 (50.80), incl	1/64 (0.40)	1/64 (0.40)	0.023 (0.58)
Over 2 (50.80) to 2 1/2 (63.50), incl	1/32 (0.79)	0	0.023 (0.58)
Over 2 1/2 (63.50) to 3 1/2 (88.90), incl	3/64 (1.19)	0	0.035 (0.89)
Over 3 1/2 (88.90) to 4 1/2 (114.30), incl	1/16 (1.59)	0	0.046 (1.17)
Over 4 1/2 (114.30) to 5 1/2 (139.70), incl	5/64 (1.98)	0	0.058 (1.47)
Over 5 1/2 (139.70) to 6 1/2 (165.10), incl	1/8 (3.18)	0	0.070 (1.78)
Over 6 1/2 (165.10) to 8 (203.20), incl	5/32 (3.97)	0	0.085 (2.18)

[A] Out-of-round is the difference between the maximum and minimum diameters of the bar, measured at the same cross section.
[B] Out-of-square section is the difference in the two dimensions at the same cross section of a square bar, each dimension being the distance between opposite faces.
[C] Size tolerances have not been evolved for rounds in the size range from 1/4 to 5/16 in. (6.35 to 7.94 mm), incl. Size tolerances have not been evolved for round sections in the size range from 1/4 (6.35 mm) to approximately 5/8 in. (15.88 mm) in diameter which are produced on rod mills in coils.
[D] Variations in size of coiled product made on rod mills are greater than size tolerances for product made on bar mills.
[E] Squares in this size are not produced as hot-rolled products.

TABLE 5
PERMISSIBLE VARIATIONS IN SIZE OF HOT-FINISHED HEXAGONAL AND OCTAGONAL BARS

Specified Sizes Measured Between Opposite Sides, in. (mm)	Permissible Variations from Specified Size, in. (mm)		Maximum Difference in 3 Measurements for Hexagons only, in. (mm)
	Over	Under	
1/4 (6.35) to 1/2 (12.70), incl	0.007 (0.18)	0.007 (0.18)	0.011 (0.28)
Over 1/2 (12.70) to 1 (25.40), incl	0.010 (0.25)	0.010 (0.25)	0.015 (0.38)
Over 1 (25.40) to 1 1/2 (38.10), incl	0.021 (0.53)	0.021 (0.53)	0.025 (0.64)
Over 1 1/2 (38.10) to 2 (50.80), incl	1/32 (0.79)	1/32 (0.79)	1/32 (0.79)
Over 2 (50.80) to 2 1/2 (63.50), incl	3/64 (1.19)	3/64 (1.19)	3/64 (1.19)
Over 2 1/2 (63.50) to 3 1/2 (88.90), incl	1/16 (1.59)	1/16 (1.59)	1/16 (1.59)

request on the purchase order additional material of adequate size to provide sample coupons for inspection purposes.

11. Number of Tests

11.1 One chemical analysis shall be made on each lot in accordance with 10.1.1.

11.2 One tension test shall be made on each lot in accordance with 10.1.2.

11.2.1 If any specimens selected to represent any heat fail to meet any of the test requirements, the material represented by such specimens may be reheat-treated and resubmitted for test.

12. Specimen Preparation

12.1 Tension test specimens shall be taken from material after final heat treatment and shall be selected in the longitudinal direction. The tension test specimens shall conform to the appropriate sections of Test Methods E 8.

TABLE 6
PERMISSIBLE VARIATIONS IN THICKNESS AND WIDTH FOR HOT-FINISHED FLAT BARS

Specified Width, in. (mm)	Permissible Variations in Thickness for Thicknesses Given, in. (mm)					
	1/8 (3.18) to 1/2 (12.70), incl		Over 1/2 (12.70) to 1 (25.40), incl		Over 1 (25.40) to 2 (50.80), incl	
	Over	Under	Over	Under	Over	Under
To 1 (25.40), incl	0.008 (0.20)	0.008 (0.20)	0.010 (0.25)	0.010 (0.25)	...	...
Over 1 (25.40) to 2 (50.80), incl	0.012 (0.30)	0.012 (0.30)	0.015 (0.38)	0.015 (0.38)	0.031 (0.79)	0.031 (0.79)
Over 2 (50.80) to 4 (101.60), incl	0.015 (0.38)	0.015 (0.38)	0.020 (0.51)	0.020 (0.51)	0.031 (0.79)	0.031 (0.79)
Over 4 (101.60) to 6 (152.40), incl	0.015 (0.38)	0.015 (0.38)	0.020 (0.51)	0.020 (0.51)	0.031 (0.79)	0.031 (0.79)
Over 6 (152.40) to 8 (203.20), incl	0.016 (0.41)	0.016 (0.41)	0.025 (0.64)	0.025 (0.64)	0.031 (0.79)	0.031 (0.79)
Over 8 (203.20) to 10 (254.00), incl	0.021 (0.53)	0.021 (0.53)	0.031 (0.79)	0.031 (0.79)	0.031 (0.79)	0.031 (0.79)

	Over 2 (50.80) to 4 (101.60), incl		Over 4 (101.60) to 6 (152.40), incl		Over 6 (152.40) to 8 (203.20), incl	
	Over	Under	Over	Under	Over	Under
To 1 (25.40), incl	...	...	...	...	...	...
Over 1 (25.40) to 2 (50.80), incl	...	...	...	...	...	...
Over 2 (50.80) to 4 (101.60), incl	0.062 (1.57)	0.031 (0.79)	...	...	...	...
Over 4 (101.60) to 6 (152.40), incl	0.062 (1.57)	0.031 (0.79)	0.093 (2.36)	0.062 (1.57)	...	...
Over 6 (152.40) to 8 (203.20), incl	0.062 (1.57)	0.031 (0.79)	0.093 (2.36)	0.062 (1.57)	0.125 (3.18)	0.156 (3.96)
Over 8 (203.20) to 10 (254.00), incl	0.062 (1.57)	0.031 (0.79)	0.093 (2.36)	0.062 (1.57)	0.125 (3.18)	0.156 (3.96)

Specified Width, in. (mm)	Permissible Variations in Width, in. (mm)	
	Over	Under
To 1 (25.40), incl	0.015 (0.38)	0.015 (0.38)
Over 1 (25.40) to 2 (50.80), incl	0.031 (0.79)	0.031 (0.79)
Over 2 (50.80) to 4 (101.60), incl	0.062 (1.57)	0.031 (0.79)
Over 4 (101.60) to 6 (152.40), incl	0.093 (2.36)	0.062 (1.57)
Over 6 (152.40) to 8 (203.20), incl	0.125 (3.18)	0.156 (3.96)
Over 8 (203.20) to 10 (254.00), incl	0.156 (3.96)	0.187 (4.75)

TABLE 7
PERMISSIBLE VARIATIONS IN SIZE OF COLD-FINISHED ROUND BARS

Specified Size, in. (mm)	Permissible Variations from Specified Size, in. (mm)[A,B] Over	Under
Over ½ (12.70) to 1 (25.40), excl	0.002 (0.05)	0.002 (0.05)
1 (25.40) to 1½ (38.10), excl	0.0025 (0.06)	0.0025 (0.06)
1½ (38.10) to 4 (101.60), incl[C]	0.003 (0.08)	0.003 (0.08)

[A] Unless otherwise specified, size tolerances are over and under as shown in the above table. When required, however, they may be specified all over and nothing under, or all under and nothing over, or any combination of over and under, if the total spread in size tolerance for a specified size is not less than the total spread shown in the table.

[B] When it is necessary to heat treat or heat treat and pickle after cold finishing, size tolerances are double those shown in the table.

[C] Cold-finished bars over 4 in. (101.60 mm) in diameter are produced; size tolerances for such bars have not been evolved.

TABLE 8
PERMISSIBLE VARIATIONS IN SIZE OF COLD-FINISHED HEXAGONAL, OCTAGONAL, AND SQUARE BARS

Specified Size, in. (mm)	Permissible Variations from Specified Size, in. (mm)[A] Over	Under
Over ½ (12.70) to 1 (25.40), incl	0	0.004 (0.10)
Over 1 (25.40) to 2 (50.80), incl	0	0.006 (0.15)
Over 2 (50.80) to 3 (76.20), incl	0	0.008 (0.20)
Over 3 (76.20)	0	0.010 (0.25)

[A] When it is necessary to heat treat or heat treat and pickle after cold finishing, size tolerances are double those shown in the table.

13. Test Methods

13.1 The chemical composition and mechanical properties of the material as enumerated in this specification shall, in case of disagreement, be determined in accordance with the following methods:

Test	ASTM Designation
Chemical analysis	Table 18 of B 649[A]
Tension	E 8
Brinell hardness	E 10
Rockwell hardness	E 18
Hardness conversion	E 140
Rounding procedure	E 29
Method of sampling	E 55
Spring-back	F 155

[A] Iron shall be determined arithmetically by difference.

13.2 For purposes of determining compliance with the limits in this specification, an observed value or a calculated value shall be rounded as indicated in accordance with the rounding method of Practice E 29.

Requirements	Rounded Unit for Observed or Calculated Value
Chemical composition, hardness and tolerance (when expressed in decimals)	Nearest unit in the last right-hand place of figures of the specified limit
Tensile strength and yield strength	Nearest 1000 psi (7 MPa)
Elongation	Nearest 1%

14. Inspection

14.1 Inspection of the material by the purchaser shall be made as agreed upon between the purchaser and the seller as part of and set forth in the purchase contract.

15. Rejection and Rehearing

15.1 Material that fails to conform to the requirements of this specification may be rejected. Rejection should

TABLE 9
PERMISSIBLE VARIATIONS IN WIDTH AND THICKNESS OF COLD-FINISHED FLAT BARS

Width, in. (mm)	Permissible Variations in Width, over and under, in. (mm)[A] For Thicknesses 1/4 (6.35) and Under	Permissible Variations in Width, over and under, in. (mm)[A] For Thicknesses Over 1/4 (6.35)
3/8 (9.52) to 1 (25.40), incl	0.004 (0.10)	0.002 (0.05)
Over 1 (25.40) to 2 (50.80), incl	0.006 (0.15)	0.003 (0.08)
Over 2 (50.80) to 3 (76.20), incl	0.008 (0.20)	0.004 (0.10)
Over 3 (76.20) to 4 1/2 (114.30), incl	0.010 (0.25)	0.005 (0.13)

Thickness, in. (mm)	Permissible Variations in Thickness, over and under, in. (mm)[A]
1/8 (3.18) to 1 (25.40), incl	0.002 (0.05)
Over 1 (25.40) to 2 (50.80), incl	0.003 (0.08)
Over 2 (50.80) to 3 (76.20), incl	0.004 (0.10)
Over 3 (76.20) to 4 1/2 (114.30), incl[B]	0.005 (0.13)

[A] When it is necessary to heat treat and pickle after cold finishing, size tolerances are double those shown in the table.

[B] Cold-finished flat bars over 4 1/2 in. (114.30 mm) wide or thick are produced; width and thickness tolerances for such bars have not been evolved.

TABLE 10
PERMISSIBLE VARIATIONS IN LENGTH OF HOT-FINISHED OR COLD-FINISHED BARS

Specified Size of Rounds, Squares, Hexagons, and Octagons, and Widths of Flats,[A] in. (mm)	Permissible Variations in Length, in. (mm) For Lengths Up to 12 ft (3658 mm), incl Over	Under	For Lengths Over 12 ft (3658 mm) to 25 ft (7620 mm), incl Over	Under
To 2 (50.80), incl	1/2 (12.70)	0	3/4 (19.05)	0
Over 2 (50.80) to 4 (101.60), incl	3/4 (19.05)	0	1 (25.40)	0
Over 4 (101.60) to 6 (152.40), incl	1 (25.40)	0	1 1/4 (31.75)	0
Over 6 (152.40) to 9 (228.60), incl	1 1/4 (31.75)	0	1 1/2 (38.10)	0
Over 9 (228.60) to 12 (304.80), incl	1 1/2 (38.10)	0	2 (50.80)	0

NOTE — The order should specify random lengths or specific lengths. When random lengths are ordered, the length tolerance is not less than 24 in. (609.60 mm). When specific lengths are ordered, Table 10 or Table 11 shall apply.

[A] The maximum width of bar flats is 10 in. (254.00 mm).

be reported to the producer or supplier promptly and in writing. In case of dissatisfaction with the results of the test, the producer or supplier may make claim for a rehearing.

16. Certification

16.1 A manufacturer's certification that the material was manufactured and tested in accordance with this specification shall be furnished at the time of shipment.

16.2 A copy of the test results shall be furnished at the time of shipment.

17. Packaging and Package Marking

17.1 *Marking* — Each bundle or box shall be tagged properly with metal tags showing heat number, grade,

TABLE 11
PERMISSIBLE VARIATIONS IN LENGTH OF HOT-FINISHED OR COLD-FINISHED BARS MACHINE CUT AFTER MACHINE STRAIGHTENING

Specified Size of Rounds, Squares, Hexagons, and Octagons, and Widths of Flats,[A] in. (mm)	For Lengths Up to 12 ft (3658 mm), incl		For Lengths Over 12 ft (3658 mm) to 25 ft (7620 mm), incl	
	Over	Under	Over	Under
To 3 (76.20), incl	1/8 (3.18)	0	3/16 (4.76)	0
Over 3 (76.20) to 6 (152.40), incl	3/16 (4.76)	0	1/4 (6.35)	0
Over 6 (152.40) to 9 (228.60), incl	1/4 (6.35)	0	5/16 (7.94)	0
Over 9 (228.60) to 12 (304.80), incl	1/2 (12.70)	0	1/2 (12.70)	0

NOTE — The order should specify random lengths or specific lengths. When random lengths are ordered, the length tolerance is not less than 24 in. (609.60 mm). When specific lengths are ordered, Table 10 or Table 11 shall apply.

[A] The maximum width of bar flats is 10 in. (254.00 mm).

TABLE 12
PERMISSIBLE VARIATIONS IN STRAIGHTNESS OF MACHINE STRAIGHTENED HOT-FINISHED OR COLD-FINISHED BARS

Measurement is taken on the concave side of the bar with a straightedge. Unless otherwise specified, hot-finished or cold-finished bars for machining purposes are furnished machine straightened to the following tolerances:

Hot finished:

1/8 in. (3.18 mm) in any 5 ft (1524 mm), but may not exceed 1/8 in. (3.18 mm) × [length in feet (mm)]/[5 ft (1524 mm)]

Cold finished:

1/16 in. (1.59 mm) in any 5 ft (1524 mm), but may not exceed 1/16 in. (1.59 mm) × [length in feet (mm)]/[5 ft (1524 mm)]

TABLE 13
DIAMETER AND OUT-OF-ROUND TOLERANCES FOR ROUND WIRE (DRAWN, POLISHED, CENTERLESS GROUND, CENTERLESS GROUND AND POLISHED)[A,B,C]

Specified Diameter, in. (mm)	Diameter Tolerance, in. (mm)	
	Over	Under
0.5000 (12.70)	0.002 (0.05)	0.002 (0.05)
Under 0.5000 (12.70) to 0.3125 (7.94), incl	0.0015 (0.04)	0.0015 (0.04)
Under 0.3125 (7.94) to 0.0440 (1.12), incl	0.001 (0.03)	0.001 (0.03)
Under 0.0440 (1.12) to 0.0330 (0.84), incl	0.0008 (0.02)	0.0008 (0.02)
Under 0.0330 (0.84) to 0.0240 (0.61), incl	0.0005 (0.013)	0.0005 (0.013)
Under 0.0240 (0.61) to 0.0120 (0.30), incl	0.0004 (0.010)	0.0004 (0.010)
Under 0.0120 (0.30) to 0.0080 (0.20), incl	0.0003 (0.008)	0.0003 (0.008)
Under 0.0080 (0.20) to 0.0048 (0.12), incl	0.0002 (0.005)	0.0002 (0.005)
Under 0.0048 (0.12) to 0.0030 (0.08), incl	0.0001 (0.003)	0.0001 (0.003)

[A] Diameter tolerances are over and under as given in this table. Also, round wire can be produced to tolerances all over and nothing under, or all under and nothing over, or any combination over and under, if the total spread in diameter tolerances for a specified diameter is not less than the total spread given in this table.

[B] The maximum out-of-round tolerance for round wire is one half of the total size tolerance given in this table.

[C] When it is necessary to heat treat after cold finishing because of special mechanical property requirements, tolerances are commonly double those shown.

TABLE 14
SIZE TOLERANCES FOR DRAWN WIRE IN HEXAGONS, OCTAGONS, AND SQUARES

Specified Size,[A] in. (mm)	Size Tolerance, in. (mm) Over	Under
1/2 (12.70)	0	0.004 (0.10)
Under 1/2 (12.70) to 5/16 (7.94), incl	0	0.003 (0.08)
Under 5/16 (7.94) to 1/8 (3.18), incl	0	0.002 (0.05)

[A] Distance across flats.

TABLE 15
LENGTH TOLERANCES FOR ROUND AND SHAPE, STRAIGHTENED AND CUT WIRE, EXACT LENGTH RESHEARED WIRE

Diameter, in. (mm)	Length, ft (mm)	Tolerance, in. (mm) Over	Under
0.125 (3.18) and under	Up to 12 (3658), incl	1/16 (1.59)	0
0.125 (3.18) and under	Over 12 (3658), incl	1/8 (3.18)	0
Over 0.125 (3.18) to 0.500 (12.70), incl	Under 3 (914)	1/32 (0.79)	0
Over 0.125 (3.18) to 0.500 (12.70), incl	3 (914) to 12 (3658), incl	1/16 (1.59)	0
Over 0.125 (3.18) to 0.500 (12.70), incl	Over 12 (3658)	1/8 (3.18)	0

TABLE 16
SIZE TOLERANCES FOR WIRE FOR WHICH THE FINAL OPERATION IS A SURFACE TREATMENT FOR THE PURPOSE OF REMOVING SCALE OR DRAWING LUBRICANT

Specified Size, in. (mm)	Tolerance, in. (mm) Over	Under
1/2 (12.70)	0.004 (0.10)	0.004 (0.10)
Under 1/2 (12.70) to 5/16 (7.94), incl	0.003 (0.08)	0.003 (0.08)
Under 5/16 (7.94) to 0.044 (1.12), incl	0.002 (0.05)	0.002 (0.05)
Under 0.044 (1.12) to 0.033 (0.84), incl	0.0013 (0.03)	0.0013 (0.03)
Under 0.033 (0.84) to 0.024 (0.61), incl	0.0008 (0.02)	0.0008 (0.02)

TABLE 17
THICKNESS AND WIDTH TOLERANCES FOR COLD-FINISHED FLAT WIRE

Specified Width, in. (mm)	Thickness Tolerance, in. (mm), over or under, for Given Thicknesses, in., (mm) Under 0.029 (0.74)	0.029 (0.74) to 0.035 (0.89), excl	0.035 (0.89) to 3/16 (4.76), excl	Width Tolerance, in. (mm) Over	Under
Under 3/8 (9.52) to 1/16 (1.59), incl	0.001 (0.03)	0.0015 (0.04)	0.002 (0.05)	0.005 (0.13)	0.005 (0.13)

TABLE 18
REFEREE ANALYSIS METHODS[A]

Element	ASTM Method
Carbon	E 98
Manganese	E 38
Silicon	E 38
Phosphorus	E 30—Photometric method
Sulfur	E 30—Direct combustion for stainless steels
Chromium	E 38—Potentiometric titration
Nickel	E 38—Gravimetric method (reprecipitate)
Molybdenum	E 30—Molybdenum by the alphabenzoinoxime method. Use 5 mL of H_3PO_4 in starting acid to hold columbium in solution. Reprecipitate
Copper	E 30—Electrolytic method
Columbium	E 30

[A] Committee E-3 on Chemical Analysis of Metals is currently regrouping methods of analysis for various alloys and preparing new scopes for standards covering methods of analysis which appear in Vol 03.05 of the *Annual Book of ASTM Standards.*

condition, specification number, and size to assure proper identification.

17.1.1 Large diameter bars may be line marked showing heat number, grade, condition, specification number, and size at the manufacturer's discretion.

17.2 *Packaging* — Bars or wire shall be bundled or boxed in such a manner as to assure safe delivery to their destination when properly transported by any common carrier.

18. Keywords

18.1 bar; UNS N08031; UNS N08904; UNS N08925; UNS N08926; UNS R20033; wire

SPECIFICATION FOR SEAMLESS AND WELDED ZIRCONIUM AND ZIRCONIUM ALLOY PIPE

SB-658/SB-658M

(Identical with ASTM Specification B 658/B 658M-01.)

1. Scope

1.1 This specification covers three grades of seamless and welded zirconium pipe.

1.2 Unless a single unit is used, for example corrosion mass gain in mg/dm^2, the values stated in either inch-pound or SI units are to be regarded separately as standard. The values stated in each system are not exact equivalents; therefore each system must be used independently of the other. SI values cannot be mixed with inch-pound values.

1.3 The following precautionary caveat pertains only to the test methods portions of this specification. *This standard does not purport to address all of the safety concerns, if any, associated with its use. It is the responsibility of the user of this standard to establish appropriate safety and health practices and determine the applicability of regulatory limitations prior to use.*

2. Referenced Documents

2.1 *ASTM Standard:*

E 8 Test Methods for Tension Testing of Metallic Materials

2.2 *ANSI Standard:*

B36.19 Stainless Steel Pipe

2.3 *ASME Standard:*

ASME Boiler and Pressure Vessel Code, Section IX

3. Terminology

3.1 *Definitions of Terms Specific to This Standard:*

3.1.1 *annealed* — for purposes of this specification "annealed" denotes material that exhibits a recrystallized grain structure.

3.2 *Lot Definitions:*

3.2.1 *castings* — a lot shall consist of all castings produced from the same pour.

3.2.2 *ingot* — no definition required.

3.2.3 *rounds, flats, tubes, and wrought powder metallurgical products (single definition, common to nuclear and non-nuclear standards)* — a lot shall consist of a material of the same size, shape, condition, and finish produced from the same ingot or powder blend by the same reduction schedule and the same heat treatment parameters. Unless otherwise agreed between manufacturer and purchaser, a lot shall be limited to the product of an 8 h period for final continuous anneal, or to a single furnace load for final batch anneal.

3.2.4 *sponge* — a lot shall consist of a single blend produced at one time.

3.2.5 *weld fittings* — definition is to be mutually agreed upon between manufacturer and the purchaser.

4. Classification

4.1 The pipe is furnished in three grades as follows:

4.1.1 *Grade R60702* — Unalloyed zirconium.

4.1.2 *Grade R60704* — Zirconium-tin alloy.

4.1.3 *Grade R60705* — Zirconium-niobium alloy.

5. Ordering Information

5.1 Orders for materials under this specification should include the following information:

5.1.1 Quantity (weight or total length),

5.1.2 Name of material (zirconium pipe),

5.1.3 Grade number (see 4.1),

TABLE 1
CHEMICAL REQUIREMENTS[A]

Element	Composition, % UNS Grade Designation R60702	R60704	R60705
Zirconium + hafnium, min	99.2	97.5	95.5
Hafnium, max	4.5	4.5	4.5
Iron + chromium	0.2 max	0.2 to 0.4	0.2 max
Tin	...	1.0 to 2.0	...
Hydrogen, max	0.005	0.005	0.005
Nitrogen, max	0.025	0.025	0.025
Carbon, max	0.05	0.05	0.05
Niobium	...	...	2.0 to 3.0
Oxygen, max	0.16	0.18	0.18

[A] By agreement between the purchaser and the manufacturer, analysis may be required and limits established for elements and compounds not specified in the table of chemical compositions.

5.1.4 Nominal pipe size and schedule (Table X1.1),

5.1.5 Lengths (random or specified cut lengths),

5.1.6 Method of manufacture (Section 6),

5.1.7 Workmanship and quality level requirements (Section 10),

5.1.8 ASTM designation and year of issue, and

5.1.9 Additions to the specification and supplementary requirements, if required.

NOTE 1 — A typical ordering description is as follows: 240-ft (70 mm) zirconium pipe, seamless, descaled 3.0-in. (75 mm) Schedule 40 by 12-ft (3 m) lengths, ASTM B 658, dated ———, Grade R60702.

TABLE 2
PERMISSIBLE VARIATION IN CHECK ANALYSIS BETWEEN DIFFERENT LABORATORIES

Element	Permissible Variation in Product Analysis, %
Hydrogen	0.002
Nitrogen	0.01
Carbon	0.01
Hafnium	0.1
Iron + chromium	0.025
Tin	0.05
Niobium	0.05
Oxygen	0.02

6. Materials and Manufacture

6.1 Seamless pipe shall be made from any seamless method that will yield a product meeting this specification.

6.2 Pipe containing welded seams or other joints made by welding shall comply with the following provisions:

6.2.1 Welded by welders, welding operators, and welding procedures qualified under the provisions of Section IX of the ASME Boiler and Pressure Vessel Code.

6.2.2 Filler metal, when used, shall be the same grade as the base metal.

6.3 The pipe shall be furnished in the annealed or stress-relieved condition.

7. Chemical Composition

7.1 The material shall conform to the requirements as to chemical composition prescribed in Table 1.

7.2 The manufacturer's ingot analysis shall be considered the chemical analysis for piping, except for hydrogen and nitrogen, which shall be determined on the finished product.

7.3 When requested by the purchaser and stated in the purchase order, a product analysis for any elements listed in Table 1 shall be made on the finished product.

7.3.1 The manufacturer's analysis shall be considered as verified if the check analysis confirms the manufacturer's reported values within the tolerances prescribed in Table 2.

8. Tensile Requirements

8.1 The material, as represented by the test specimens, shall conform to the tensile properties prescribed in Table 3.

TABLE 3
TENSILE REQUIREMENTS

	UNS Grade Designations		
	R60702	R60704	R60705
Tensile strength, min, ksi (MPa)	55 (380)	60 (415)	80 (550)
Yield strength, min, ksi (MPa)	30 (205)	35 (240)	55 (380)
Elongation in 2 in. or 50 mm, min, %[A]	16	14	16

[A] When a sub-size specimen is used, the gage length shall be as specified in Test Methods E 8 for that specimen.

TABLE 4
PERMISSIBLE VARIATIONS IN DIAMETER[A]

	Permissible Variations in Outside Diameter, in. (mm)	
Nominal Diameter, in. (mm)	Over	Under
1/8 to 1 1/2 (3.2 to 40), incl	1/64 (0.4)	1/32 (0.8)
Over 1 1/2 to 4 (40 to 100), incl	1/32 (0.8)	1/32 (0.8)
Over 4 to 8 (100 to 200), incl	1/16 (1.6)	1/32 (0.8)
Over 8 to 12 (200 to 305), incl	3/32 (2.4)	1/32 (0.8)

[A] For seamless pipe only. Tolerances on welded pipe shall be as agreed upon between the manufacturer and the purchaser.

9. Permissible Variations in Dimensions

9.1 *Diameter*— Variations in outside diameters shall not exceed those prescribed in Table 4.

9.2 *Thickness*— The variation in thickness at any point shall not be more than ±12.5% of the nominal wall thickness specified.

9.3 *Length:*

9.3.1 Pipe shall be furnished in lengths as specified in the purchase order. No pipe shall be under the specified length and not more than 1/4 in. (6.4 mm) over that specified.

9.3.2 For pipe ordered to random lengths, the lengths and variations shall be agreed upon between the manufacturer and the purchaser.

NOTE 2 — A system of standard pipe sizes approved by the American National Standards Institute as ANSI B36.19, reproduced as Table X1.1, shall apply, pending the development of similar standards for zirconium.

10. Workmanship, Finish, and Appearance

10.1 The finished pipe shall be reasonably straight, shall have smooth ends, free of burrs, and shall be free of cracks, seams, blisters, and other injurious imperfections in accordance with standards of acceptability agreed upon between the manufacturer and the purchaser. Minor defects may be removed provided the dimensional tolerances in accordance with Section 9 are not exceeded. Unless otherwise specified, the pipe shall be furnished free of scale.

11. Sampling

11.1 The lot shall be in accordance with 3.2.

12. Number of Tests and Retests

12.1 One longitudinal tension test shall be made from each lot, see 13.1.

12.2 One chemistry test for hydrogen and nitrogen content shall be made from each lot of finished product, see 13.3.

12.3 A hydrostatic proof test shall be performed on each length of pipe, 13.2.

12.4 *Retests:*

12.4.1 If any sample or specimen exhibits obvious surface contamination or improper preparation disqualifying it as a truly representative sample, it shall be discarded and a new sample or specimen substituted.

12.4.2 If the results of any tests of any lot do not conform to the requirements specified, retests shall be made on additional pipe of double the original number from the same lot, each of which shall conform to the requirements specified.

12.4.3 Retesting after failure of initial retests may be done only with the approval of the purchaser.

13. Test Methods

13.1 *Tension Tests* — Conduct the tension test in accordance with Test Methods E 8. Determine the yield strength by the offset (0.2%) method. Determine the tensile properties using a strain rate of 0.003 to 0.007 in./in. (mm/mm)/min through the yield strength. After the yield strength has been exceeded, the cross-head speed may be increased to approximately 0.05 in./in. (mm/mm)/min to failure.

13.2 *Hydrostatic Tests* — Prior to dimensional checks, upsetting, swaging, expanding, or other forming operations, test each pipe 1/8 in. (3.2 mm) and larger in outside diameter, and with wall thickness of 0.015 in. (0.4 mm) and over to a hydrostatic pressure sufficient to produce a fiber stress of three fourths of the minimum yield strength of the tubing, provided that the test pressure does

not exceed 5000 psi (35 MPa). Determine the test pressure as follows:

$$P = 2St/D \quad (1)$$

where:

P = hydrostatic test pressure, psi (MPa),
S = allowable fiber stress of three-fourths of the minimum yield strength (Table 2), psi (MPa),
t = average wall thickness of the pipe, in. (mm), and
D = nominal diameter of the pipe, in. (mm).

13.3 *Chemical Tests* — Conduct the chemical analysis by the standard techniques normally used by the manufacturer.

14. Inspection

14.1 The manufacturer shall inspect the material covered by this specification prior to shipment and, on request, shall furnish the purchaser with certificates of test. If so specified in the purchase order, the purchaser or his representative may witness the testing and inspection of the material at the place of manufacture. In such cases, the purchaser shall state in his purchase order which tests he desires to witness. The manufacturer shall give ample notice to the purchaser as to the time and place of the designated tests. If the purchaser's representative does not present himself at the time agreed upon for the testing, the manufacturer shall consider the requirement for the purchaser's inspection at the place of manufacture to be waived.

14.2 The manufacturer shall afford the inspector representing the purchaser, without charge, all reasonable facilities to satisfy him that the material is being furnished in accordance with this specification. This inspection shall be so conducted as not to interfere unnecessarily with the operation of the works.

15. Rejection

15.1 Rejection for failure of the material to meet the requirements of this specification shall be reported to the manufacturer within 60 calendar days from the receipt of the material by the purchaser. Unless otherwise specified, rejected material may be returned to the manufacturer at the manufacturer's expense, unless the purchaser receives, within three weeks of the notice of rejection, other instructions for disposition.

16. Certification

16.1 A producer or supplier shall furnish the purchaser with a certificate that the material was manufactured, sampled, tested, and inspected in accordance with this specification and has been found to meet the requirements. The certificate shall include a report of the test results.

17. Referee

17.1 In the event of disagreement between the manufacturer and the purchaser on the conformance of the material to the requirements of this specification or any special test specified by the purchaser, a mutually acceptable referee shall perform the tests in question. The results of the referee's testing shall be used in determining conformance of the material to this specification.

18. Product Marking

18.1 Unless otherwise specified, each length of pipe $\frac{3}{8}$ in. (9.5 mm) nominal diameter and larger, manufactured in accordance with this specification, shall be marked legibly, either by stenciling, stamping, or rolling, with the manufacturer's private identifying mark, the ASTM designation, the grade, and head number. On smaller than $\frac{3}{8}$-in. (9.5-mm) nominal diameter pipe that is bundled, the same information may be stamped legibly on a metal tag securely attached to each bundle.

19. Packaging and Package Marking

19.1 Pipe shall be packaged suitably in such a manner as to assure safe delivery to its destination when properly transported by common carrier.

20. Keywords

20.1 pipe; zirconium; zirconium alloy

APPENDIX

(Nonmandatory Information)

X1. PIPE DIMENSIONS

X1.1 Table X1.1 is from Table 1 of ANSI B36.19, with the SI units added in this standard.

TABLE X1.1 DIMENSIONS OF WELDED AND SEAMLESS ZIRCONIUM PIPE

Nominal Pipe Size, in. (mm)	Outside Diameter, in. (mm)	Nominal Wall Thicknesss, in. (mm)			
		Schedule 5S	Schedule 10S	Schedule 40S	Schedule 80S
⅛ (3.2)	0.405 (10.3)	...	0.049 (1.24)	0.068 (1.73)	0.095 (2.41)
¼ (6.4)	0.540 (13.7)	...	0.065 (1.65)	0.088 (2.24)	0.119 (3.02)
⅜ (9.5)	0.675 (17.1)	...	0.065 (1.65)	0.091 (2.31)	0.126 (3.20)
½ (13)	0.840 (21.3)	0.065 (1.65)	0.083 (2.11)	0.109 (2.77)	0.147 (3.73)
¾ (20)	1.050 (26.7)	0.065 (1.65)	0.083 (2.11)	0.113 (2.87)	0.154 (3.91)
1 (25)	1.315 (33.4)	0.065 (1.65)	0.109 (2.77)	0.133 (3.38)	0.179 (4.55)
1¼ (32)	1.660 (42.2)	0.065 (1.65)	0.109 (2.77)	0.140 (3.56)	0.191 (4.85)
1½ (38)	1.900 (48.3)	0.065 (1.65)	0.109 (2.77)	0.145 (3.68)	0.200 (5.08)
2 (50)	2.375 (60.3)	0.065 (1.65)	0.109 (2.77)	0.154 (3.91)	0.218 (5.54)
2½ (64)	2.875 (73.0)	0.083 (2.11)	0.120 (3.05)	0.203 (5.16)	0.276 (7.01)
3 (76)	3.500 (88.9)	0.083 (2.11)	0.120 (3.05)	0.216 (5.49)	0.300 (7.62)
3½ (90)	4.000 (101.6)	0.083 (2.11)	0.120 (3.05)	0.226 (5.74)	0.318 (8.08)
4 (100)	4.500 (114.3)	0.083 (2.11)	0.120 (3.05)	0.237 (6.02)	0.337 (8.56)
5 (125)	5.583 (141.3)	0.109 (2.77)	0.134 (3.40)	0.258 (6.55)	0.375 (9.52)
6 (150)	6.625 (168.3)	0.109 (2.77)	0.134 (3.40)	0.280 (7.11)	0.432 (10.97)
8 (200)	8.625 (219.1)	0.109 (2.77)	0.148 (3.76)	0.322 (8.18)	0.500 (12.7)
10 (250)	10.750 (273.0)	0.134 (3.40)	0.165 (4.19)	0.365 (9.27)	0.500 (12.7)
12 (300)	12.750 (323.8)	0.156 (3.96)	0.180 (4.57)	0.375 (9.52)	0.500 (12.7)

NOTE 1 — The decimal thickness listed for the respective pipe sizes represents their nominal or average wall dimensions.

SPECIFICATION FOR UNS N08028 SEAMLESS TUBES

SB-668

(Identical with ASTM Specification B 668-99 except that certification has been made mandatory.)

1. Scope

1.1 This specification covers UNS N08028 seamless cold-finished tubes intended for general corrosive service. The general requirements are covered in Specification B 829.

1.2 The values stated in inch-pound units are to be regarded as the standard. The values given in parentheses are for information only.

2. Referenced Documents

2.1 *ASTM Standard:*

B 829 Specification for General Requirements for Nickel and Nickel Alloy Seamless Pipe and Tube

3. General Requirement

3.1 Material furnished under this specification shall conform to the applicable requirements of Specification B 829 unless otherwise provided herein.

4. Ordering Information

4.1 Orders for material under this specification shall include the following information:

4.1.1 Alloy name or UNS number,

4.1.2 ASTM designation and year of issue,

4.1.3 *Dimensions* — Outside diameter, minimum or average wall thickness (in inches or millimetres, not gage number), and length (specific or random),

4.1.4 Quantity (feet or metres, or number of pieces),

4.1.5 Optional requirements,

4.1.6 *Certification* — Certification is required (Section 9),

4.1.7 *Samples for Product (Check) Analysis* — State whether samples for product (check) analysis should be furnished, and

TABLE 1
CHEMICAL REQUIREMENTS

Element	Composition, %
Carbon, max	0.030
Silicon, max	1.0
Manganese, max	2.50
Phosphorus, max	0.030
Sulfur, max	0.030
Chromium	26.0–28.0
Nickel	30.0–34.0
Molybdenum	3.0–4.0
Copper	0.6–1.4
Iron	Remainder[A]

[A] Determined arithmetically by difference.

4.1.8 *Purchaser Inspection* — If the purchaser wishes to witness tests or inspection of material at the place of manufacture, the purchase order must so state, indicating which tests or inspections are to be witnessed.

5. Material and Manufacture

5.1 Tubes shall be made by the seamless process and shall be cold finished.

5.2 Tubes shall be furnished in the solution-annealed condition.

NOTE 1 — The recommended heat treatment shall consist of heating the material to a temperature of 1975 to 2100°F (1080 to 1150°C) with subsequent quenching in water or rapidly cooling by other means.

5.3 The scale shall be removed by suitable means. When bright annealed, scale removal operations are not necessary.

6. Chemical Composition

6.1 The material shall conform to the requirement prescribed in Table 1.

TABLE 2
TENSILE REQUIREMENTS

Tensile Strength, min, ksi (MPa)	Yield Strength, 0.2% Offset, min, ksi (MPa)	Elongation in 2 in. (50.8 mm) or 4*D*, min, %
73 (500)	31 (214)	40

TABLE 3
PERMISSIBLE VARIATIONS IN OUTSIDE DIAMETER AND WALL THICKNESS

	Wall Thickness, %					
	Outside Diameter, in. (mm)		Average		Minimum Wall	
Specified Outside Diameter, in. (mm)	+	−	+	−	+	−
Up to 5/8 (15.9) excl	0.005 (0.13)	0.005 (0.13)	15.0	15.0	30.0	0
5/8 to 1 1/2 (15.9 to 38.1), incl	0.0075 (0.19)	0.0075 (0.19)	10.0	10.0	20.0	0
Over 1 1/2 to 3 1/2 (38.1 to 88.9), incl	0.010 (0.25)	0.010 (0.25)	10.0	10.0	22.0	0
Over 3 1/2 to 4 1/2 (88.9 to 114.3), incl	0.015 (0.38)	0.015 (0.38)	10.0	10.0	22.0	0
Over 4 1/2 to 5 (114.3 to 127), incl	0.020 (0.51)	0.020 (0.51)	12.5	12.5	22.0	0
Over 5 to 8 (127 to 203.2) incl	0.030 (0.76)	0.030 (0.76)	12.5	12.5	25.0	0

6.1.1 A chemical analysis shall be made on each lot of material as described in Specification B 829.

6.2 If a product (check) analysis is performed by the purchaser, the material shall conform to Table 1 subject to the product (check) analysis variations prescribed in Specification B 829.

7. Mechanical and Other Requirements

7.1 The material shall conform to the mechanical properties prescribed in Table 2. One test is required for each lot, as defined in Specification B 829.

7.1.1 One tension test shall be made on each lot of tubes.

7.2 *Flaring Test* — One flaring test shall be made on a specimen from one end of one tube from each lot of finished tubes.

7.3 *Hydrostatic Test or Nondestructive Test:*

7.3.1 Each tube shall be subjected to either the hydrostatic test or the nondestructive electric test at the manufacturer's option. The purchaser may specify which test is to be used.

8. Dimensions and Permissible Variations

8.1 *Outside Diameter and Wall Thickness* — The permissible variations in the outside diameter and wall thickness of the tube shall not exceed those prescribed in Table 3.

9. Certification

9.1 A manufacturer's certification shall be furnished to the purchaser stating that the material has been manufactured, tested, and inspected in accordance with this specification, and that the test results on representative samples meet specification requirements. A report of the test results shall be furnished.

10. Keywords

10.1 seamless tube; UNS N08028

SPECIFICATION FOR NICKEL-IRON-CHROMIUM-MOLYBDENUM-COLUMBIUM STABILIZED ALLOY (UNS N08700) BAR AND WIRE

SB-672

(Identical with ASTM Specification B 672-95)

1. Scope

1.1 This specification covers nickel-iron-chromium-molybdenum-columbium stabilized alloy (UNS N08700) bar and wire.

1.2 The values stated in inch-pound units are to be regarded as the standard.

2. Referenced Documents

2.1 *ASTM Standards*

A 262 Practices for Detecting Susceptibility to Intergranular Attack in Austenitic Stainless Steels

E 8 Test Methods for Tension Testing of Metallic Materials

E 29 Practice for Using Significant Digits in Test Data to Determine Conformance With Specifications

E 38 Methods for Chemical Analysis of Nickel-Chromium and Nickel-Chromium-Iron Alloys

E 55 Practice for Sampling Wrought Nonferrous Metals and Alloys for Determination of Chemical Composition

E 353 Test Methods for Chemical Analysis of Stainless, Heat Resisting, Maraging, and Other Similar Chromium-Nickel-Iron Alloys

3. Terminology

3.1 *Descriptions of Terms Specific to This Standard*

3.1.1 The terms bar and wire as used in this specification are described as follows:

3.1.1.1 *bars* — hot-finished rounds, squares, octagons, and hexagons: $\frac{1}{4}$ in. (6.35 mm) and over in diameter or size. Hot-finished flats: $\frac{1}{4}$ in. to 10 in. (254 mm), inclusive, in width, $\frac{1}{8}$ in. (3.18 mm) and over in thickness. Cold-finished rounds, squares, octagons, hexagons, and shapes: over $\frac{1}{2}$ in. (12.7 mm) in diameter or size. Cold-finished flats: $\frac{3}{8}$ in. (9.52 mm) and over in width (see 3.1.1.1), $\frac{1}{8}$ in. and over in thickness (see 3.1.1.2).

(1) Widths less than 0.375 in. (9.52 mm) and thicknesses less than 0.187 in. (4.75 mm) are generally described as flat wire.

(2) Thicknesses 0.125 in. to under 0.187 in. (3.18 mm to under 4.76 mm) can be cold-rolled strip as well as bar.

3.1.1.2 *wire* — Cold-finished only: round, square, octagon, hexagon, and shape wire, $\frac{1}{2}$ in. and under in diameter or size. Cold-finished only: flat wire, $\frac{3}{16}$ in. (4.76 mm) to under 0.375 in. (9.52 mm) in width, 0.010 in. (0.254 mm) to under $\frac{3}{16}$ in. thickness.

4. Ordering Information

4.1 Orders for material under this specification shall include the following information:

4.1.1 quantity (weight or number of pieces);

4.1.2 name of material or UNS N08700;

4.1.3 form (bar or wire);

4.1.4 dimensions;

4.1.5 finish;

4.1.6 ASTM designation and year of issue;

4.1.7 *Corrosion Test*— State if intergranular corrosion test is required (Supplementary Requirements); and

4.1.8 *Certification or Test Reports*— State if certification or test reports are required (Section 14).

TABLE 1
CHEMICAL REQUIREMENTS

Element	Composition, %
Nickel	24.0 to 26.0
Iron	Remainder [Note (1)]
Chromium	19.0 to 23.0
Molybdenum	4.3 to 5.0
Columbium	8 × carbon to 0.40
Carbon, max	0.04
Silicon, max	1.00
Manganese, max	2.00
Phosphorus, max	0.040
Sulfur, max	0.030
Copper, max	0.50

NOTE:
(1) Determined arithmetically by difference.

TABLE 2
PRODUCT (CHECK) ANALYSIS

Element	Tolerances Over the Max Limit or Under the Min. Limit, %
Nickel	0.20
Chromium	0.20
Molybdenum	0.10
Columbium	0.05
Carbon	0.01
Silicon	0.05
Manganese	0.04
Phosphorus	0.005
Sulfur	0.005
Copper	0.03

NOTE 1 — A typical ordering description is as follows: 200 bars, UNS N08700, 1 in. (25.4 mm) round by 10 to 14 ft (3.0 to 4.3 m), centerless ground, ASTM 672 dated _____.

5. Materials and Manufacture

5.1 *Heat Treatment* — The final heat treatment shall be a solution anneal. Straightening or cold finishing, or both, may be performed after the final solution annealing operation. Cold drawing to more than a minor sizing reduction (preferred maximum 5% in area) after final solution annealing is not recommended.

NOTE 2 — The recommended solution anneal consists of heating to a minimum temperature of 2,000°F (1,090°C) and cooling rapidly to room temperature.

6. Chemical Composition

6.1 Heat analysis, on samples in accordance with 11.2, shall conform to the requirements as to chemical composition prescribed in Table 1.

6.2 If a product analysis is performed by the purchaser, the material shall conform to the composition limits within the product analysis variation prescribed in Table 2.

7. Mechanical Requirements

7.1 The material shall conform to the requirements as to the mechanical property prescribed in Table 3.

8. Dimensions and Permissible Variations

8.1 *Bar* — Bars shall conform to the variations in dimensions prescribed in Tables 4 to 12, inclusive, as applicable.

8.2 *Wire* — Wire shall conform to the permissible variations in dimensions prescribed in Tables 13 to 17, inclusive, as applicable.

9. Workmanship, Finish, and Appearance

9.1 The product shall be uniform in quality and condition, smooth, commercially straight or flat, and free of injurious imperfections.

10. Sampling

10.1 *Lot* — Definition

10.1.1 A lot for chemical analysis shall consist of one heat.

10.1.2 A lot for mechanical properties or corrosion testing (Supplementary Requirement S1) shall consist of all material from a heat and cross-sectional size, heat treated by the same practice.

10.2 *Test Material Selection*

10.2.1 *Chemical Analysis* — A representative sample from each lot shall be taken during pouring or subsequent processing.

10.2.1.1 *Product (Check) Analysis* shall be wholly the responsibility of the purchaser.

10.2.2 *Mechanical Properties and Corrosion Test* (Supplementary Requirement S1) — Samples of the material to provide test specimens shall be taken from such locations in each lot as to be representative of that lot.

11. Number of Tests

11.1 *Chemical Analysis* — one test per lot

TABLE 3
MECHANICAL PROPERTY REQUIREMENTS

Condition	Material Dimensions, in.	Test Direction	Tensile Strength, Min., ksi (MPa)	Yield Strength (0.2 % Offset), Min., ksi (MPa)	Elongation in 2 in. or 50.8 mm, or 4*D*, Min., %	Reduction of Area, Min., %
Annealed, hot-finished or cold-finished	All	Longitudinal	80 (550)	35 (240)	30.0	50.0
Annealed, hot-finished or cold-finished	Widths, 3 and over [Note (1)]	Transverse	80 (550)	35 (240)	25.0	40.0

NOTE:
(1) If the material diameter or width is over 3 in. (76.2 mm), material may be tensile tested in the transverse direction.

TABLE 4
PERMISSIBLE VARIATIONS IN SIZE OF HOT-ROLLED ROUND AND SQUARE BARS

	Permissible Variations From Specified Size, in. (mm)		Out-of-Round [Note (1)] or Out-of-Square [Note (2)], in. (mm)
	Over	Under	
0.250 (6.35) to 0.312 (7.94) incl [Notes (3), (4)]	[Note (5)]	[Note (5)]	[Note (5)]
Over 0.312 (7.94) to 0.438 (11.11) incl [Notes (3), (4)]	0.006 (0.15)	0.006 (0.15)	0.009 (0.23)
Over 0.438 (11.11) to 0.625 (15.88) incl [Notes (3), (4)]	0.007 (0.18)	0.007 (0.18)	0.010 (0.25)
Over 0.625 (15.88) to 0.875 (22.22) incl	0.008 (0.20)	0.008 (0.20)	0.012 (0.30)
Over 0.875 (22.22) to 1.000 (25.40) incl	0.009 (0.23)	0.009 (0.23)	0.013 (0.33)
Over 1.000 (25.40) to 1.125 (28.58) incl	0.010 (0.25)	0.010 (0.25)	0.015 (0.38)
Over 1.125 (28.58) to 1.250 (31.75) incl	0.011 (0.28)	0.011 (0.28)	0.016 (0.41)
Over 1.250 (31.75) to 1.375 (34.92) incl	0.012 (0.30)	0.012 (0.30)	0.018 (0.46)
Over 1.375 (34.92) to 1.500 (38.10) incl	0.014 (0.36)	0.014 (0.36)	0.021 (0.53)
Over 1.500 (38.10) to 2.000 (50.80) incl	0.016 (0.40)	0.016 (0.40)	0.023 (0.58)
Over 2.000 (50.80) to 2.500 (63.50) incl	0.031 (0.79)	0	0.023 (0.58)
Over 2.500 (63.50) to 3.500 (88.90) incl	0.047 (1.19)	0	0.035 (0.89)
Over 3.500 (88.90) to 4.500 (114.30) incl	0.063 (1.59)	0	0.046 (1.17)
Over 4.500 (114.30) to 5.500 (139.70) incl	0.078 (1.98)	0	0.058 (1.47)
Over 5.500 (139.70) to 6.500 (165.10) incl	0.125 (3.18)	0	0.070 (1.78)
Over 6.500 (165.10) to 8.000 (203.20) incl	0.156 (3.97)	0	0.085 (2.18)

NOTES:
(1) Out-of-round is the difference between the minimum diameters of the bar, measured at the same cross section.
(2) Out-of-square section is the difference in the two dimensions at the same section of a square bar, each dimension being the distance between opposite faces.
(3) Size tolerances have not been evolved for rounds in the size range of 0.250 to 0.312 in. (6.35 to 7.94 mm), inclusive. Size tolerances have not been evolved for round sections in the size range of 0.250 in. to approximately 0.625 in. (15.88 mm) in diameter which are produced on rod mills in coils.
(4) Variations in size of coiled product made on rod mills are greater than size tolerances for product made on bar mills.
(5) Squares in this size are not produced as hot-rolled products.

TABLE 5
PERMISSIBLE VARIATIONS IN SIZE OF HOT-ROLLED HEXAGONAL AND OCTAGONAL BARS

Specified Sizes Measured Between Opposite Sides, in. (mm)	Permissible Variations From Specified Size, in. (mm)		Max Difference in 3 Measurements for Hexagons Only, in. (mm)
	Over	Under	
0.250 (6.35) to 0.500 (12.70) incl	0.007 (0.18)	0.007 (0.18)	0.011 (0.28)
Over 0.500 (12.70) to 1.000 (25.40) incl	0.010 (0.25)	0.010 (0.25)	0.015 (0.38)
Over 1.000 (25.40) to 1.500 (38.10) incl	0.021 (0.53)	0.021 (0.53)	0.025 (0.64)
Over 1.500 (38.10) to 2.000 (50.80) incl	0.031 (0.79)	0.031 (0.79)	0.031 (0.79)
Over 2.000 (50.80) to 2.500 (63.50) incl	0.047 (1.19)	0.047 (1.19)	0.047 (1.19)
Over 2.500 (63.50) to 3.500 (88.90) incl	0.063 (1.59)	0.063 (1.59)	0.063 (1.59)

TABLE 6
PERMISSIBLE VARIATIONS IN THICKNESS AND WIDTH FOR HOT-ROLLED FLAT BARS

Specified Width, in. (mm)	Permissible Variations in Thickness for Thickness Given, in. (mm)					
	0.125 (3.18) to 0.500 (12.70) Incl		Over 0.500 (12.70) to 1.000 (25.40) Incl		Over 1.000 (25.40) to 2.000 (50.80) Incl	
	Over	Under	Over	Under	Over	Under
To 1.000 (25.40) incl	0.008 (0.20)	0.008 (0.20)	0.010 (0.25)	0.010 (0.25)		
Over 1.000 (25.40) to 2.000 (50.80) incl	0.012 (0.30)	0.012 (0.30)	0.015 (0.38)	0.015 (0.38)	0.031 (0.79)	0.031 (0.79)
Over 2.000 (50.80) to 4.000 (101.60) incl	0.015 (0.38)	0.015 (0.38)	0.020 (0.51)	0.020 (0.51)	0.031 (0.79)	0.031 (0.79)
Over 4.000 (101.60) to 6.000 (152.40) incl	0.015 (0.38)	0.015 (0.38)	0.020 (0.51)	0.020 (0.51)	0.031 (0.79)	0.031 (0.79)
Over 6.000 (152.40) to 8.000 (203.20) incl	0.016 (0.41)	0.016 (0.41)	0.025 (0.41)	0.025 (0.41)	0.031 (0.79)	0.031 (0.79)
Over 8.000 (203.20) to 10.000 (254.00) incl	0.021 (0.53)	0.021 (0.53)	0.031 (0.79)	0.031 (0.79)	0.031 (0.79)	0.031 (0.79)

	Over 2.000 (50.80) to 4.000 (101.60) Incl		Over 4.000 (101.60) to 5.000 (152.40) Incl		Over 6.000 (152.40) to 8.000 (203.20) Incl	
	Over	Under	Over	Under	Over	Under
To 1.000 (25.40) incl	...	...	...	...	...	...
Over 1.000 (25.40) to 2.000 (50.80) incl	...	...	...	...	...	...
Over 2.000 (50.80) to 4.000 (101.60) incl	0.062 (1.57)	0.031 (0.79)	...	...	...	...
Over 4.000 (101.60) to 6.000 (152.40) incl	0.062 (1.57)	0.031 (0.79)	0.093 (2.36)	0.062 (1.57)	...	...
Over 6.000 (152.40) to 8.000 (203.20) incl	0.062 (1.57)	0.031 (0.79)	0.093 (2.36)	0.062 (1.57)	0.125 (3.18)	0.156 (3.96)
Over 8.000 (203.20) to 10.000 (254.00) incl	0.062 (1.57)	0.031 (0.79)	0.093 (2.36)	0.062 (1.57)	0.125 (3.18)	0.156 (3.96)

Specified Width, in. (mm)	Permissible Variations in width, in. (mm)	
	Over	Under
To 1.000 (25.40) incl	0.015 (0.38)	0.015 (0.38)
Over 1.000 (25.40) to 2.000 (50.80) incl	0.031 (0.79)	0.031 (0.79)
Over 2.000 (50.80) to 4.000 (101.60) incl	0.062 (1.57)	0.031 (0.79)
Over 4.000 (101.60) to 6.000 (152.40) incl	0.093 (2.36)	0.062 (1.57)
Over 6.000 (152.40) to 8.000 (203.20) incl	0.125 (3.18)	0.156 (3.96)
Over 8.000 (203.20) to 10.000 (254.00) incl	0.156 (3.96)	0.187 (4.75)

TABLE 7
PERMISSIBLE VARIATIONS IN SIZE OF COLD-FINISHED ROUND BARS

Specified Size, in. (mm)	Permissible Variations From Specified Size, in. (mm) [Notes (1), (2)] Over	Under
Over 0.500 (12.70) to 1.000 (25.40) excl	0.002 (0.05)	0.002 (0.05)
1.000 (25.40) to 1.500 (38.10) excl	0.0025 (0.06)	0.0025 (0.06)
1.500 (38.10) to 4.000 (101.60) incl [Note (3)]	0.003 (0.08)	0.003 (0.08)

NOTES:
(1) Unless otherwise specified, size tolerances are over and under as shown in Table 7. When required, however, they may be specified all over and nothing under, or all under and nothing over, or any combination of over and under, if the total spread in size tolerance for a specified size is not less than the total spread shown in the Table.
(2) When it is necessary to heat treat or heat treat and pickle after cold finishing, size tolerances are double those shown in the Table.
(3) Cold-finished bars over 4 in. (101.60 mm) in diameter are produced; size tolerances for such bars have not been evolved.

TABLE 8
PERMISSIBLE VARIATIONS IN SIZE OF COLD-FINISHED HEXAGONAL, OCTAGONAL, AND SQUARE BARS

Specified Size, in. (mm)	Permissible Variations From Specified Size, in. (mm) [Note (1)] Over	Under
Over 0.500 (12.70) to 1.000 (25.40) incl	0	0.004 (0.10)
Over 1.000 (25.40) to 2.000 (50.80) incl	0	0.006 (0.15)
Over 2.000 (50.80) to 3.000 (76.20) incl	0	0.008 (0.20)
Over 3.000 (76.20)	0	0.010 (0.25)

NOTE:
(1) When it is necessary to heat treat or heat treat and pickle after cold finishing, size tolerances are double those shown in the Table.

11.2 *Mechanical Properties and Corrosion Test* — (Supplementary Requirement S1) — one test per lot

12. Test Methods

12.1 Determine the chemical composition, mechanical properties, and corrosion resistance of the material as

TABLE 9
PERMISSIBLE VARIATIONS IN WIDTH AND THICKNESS OF COLD-FINISHED FLAT BARS

Width, in. (mm)	Permissible Variations in Width, Over and Under, in. (mm) [Note (1)] For Thicknesses 0.250 (6.35) and Under	For Thickness Over 0.250 (6.35)
0.375 (9.52) to 1.000 (25.40) incl	0.004 (0.10)	0.002 (0.05)
Over 1.000 (25.40) to 2.000 (50.80) incl	0.006 (0.15)	0.003 (0.08)
Over 2.000 (50.80) to 3.000 (76.20) incl	0.008 (0.20)	0.004 (0.10)
Over 3.000 (76.20) to 4.500 (114.30) incl	0.010 (0.25)	0.005 (0.13)

Thickness, in. (mm)	Permissible Variations in Thickness, Over and Under, in. (mm) [Note (1)]
0.125 (3.18) to 1.000 (25.40) incl	0.002 (0.05)
Over 1.000 (25.40) to 2.000 (50.80) incl	0.003 (0.08)
Over 2.000 (50.80) to 3.000 (76.20) incl	0.04 (0.10)
Over 3.000 (76.20) to 4.500 (114.30) incl [Note (2)]	0.005 (0.13)

NOTES:
(1) When it is necessary to heat treat and pickle after cold finishing, size tolerances are double those shown in the Table.
(2) Cold-finished flat bars over 4.500 in. (114.30 mm) wide or thick are produced; width and thickness tolerances for such bars have not been evolved.

enumerated in this specification, in case of disagreement, in accordance with the following methods:

Test	ASTM Designation
Corrosion test (Supplementary Requirement S1)	A 262, Practice C
Chemical analysis	E 38, E 353[A,B]
Tension	E 8
Rounding procedure	E 29
Method of sampling for product analysis	E 55

[A] Iron shall be determined arithmetically by difference.
[B] Methods E 38 is to be used only for elements not covered in Test Methods E 353.

13. Rejection and Rehearing

13.1 Material that fails to conform to the requirements of this specification may be rejected. Rejection should

TABLE 10
PERMISSIBLE VARIATIONS IN LENGTH OF HOT-FINISHED OR COLD-FINISHED BARS

Specified Size of Rounds, Squares, Hexagons, and Octagons and Widths of Flats, in. (mm)	Permissible Variations in Length, in. (mm)			
	For Lengths Up to 12 ft (3,658 mm) Incl		For Lengths Over 12 ft (3,658 mm) to 25 ft (7,620 mm) Incl	
	Over	Under	Over	Under
To 2.000 (50.80) incl	0.500 (12.7)	0	0.750 (19.1)	0
Over 2.000 (50.80) to 4.000 (101.60) incl	0.750 (19.0)	0	1.000 (25.4)	0
Over 4.000 (101.60) to 6.000 (152.40) incl	1.000 (25.4)	0	1.250 (31.8)	0
Over 6.000 (152.40) to 9.000 (228.60) incl	1.250 (31.8)	0	1.500 (38.1)	0
Over 9.000 (228.60) to 12.000 (304.8) incl	1.500 (38.1)	0	2.000 (50.8)	0

GENERAL NOTE: The order should specify random lengths. When random lengths are ordered, the length tolerance is not less than 24 in. (609.60 mm). When specified lengths are ordered, Table 10 or Table 11 shall apply.

NOTE:
(1) The maximum width of bar flats is 10 in. (254.00 mm).

TABLE 11
PERMISSIBLE VARIATIONS IN LENGTH OF HOT-FINISHED OR COLD-FINISHED BARS MACHINE CUT AFTER MACHINE STRAIGHTENING

Specified Size of Rounds, Squares, Hexagons, and Octagons and Widths of Flats, [Note (1)]	For Lengths Up to 12 ft (3,658 mm) Incl		For Lengths Over 12 (3,658 mm) to 25 ft (7,620 mm) Incl	
	Over	Under	Over	Under
To 3.000 (76.20) incl	0.125 (3.2)	0	0.063 (4.8)	0
Over 3.000 (76.20) to 6.000 (152.40) incl	0.063 (4.8)	0	0.250 (6.4)	0
Over 6.000 (152.40) to 9.000 (228.60) incl	0.250 (6.4)	0	0.188 (7.9)	0
Over 9.000 (228.60) to 12.000 (304.80) incl	0.500 (12.7)	0	0.500 (12.7)	0

GENERAL NOTE: The order should specify random lengths or specific lengths. When random lengths are ordered, the length tolerance is not less than 24 in. (609.60 mm). When specific lengths are ordered, Table 10 or Table 11 shall apply.

NOTE:
(1) The maximum width of bar flats is 10 in. (254.00 mm).

TABLE 12
PERMISSIBLE VARIATIONS IN STRAIGHTNESS OF MACHINE STRAIGHTENED HOT-FINISHED OR COLD-FINISHED BARS

Measurement is taken on the concave side of the bar with a straightedge. Unless otherwise specified, hot-finished or cold-finished bars for machining purposes are furnished machine straightened to the following tolerances:

Hot finished:

0.125 in. (3.2 mm) in any 5 ft (1,524 mm), but may not exceed 0.125 in. x [length in feet (mm)]/[5 ft (1,524 mm)]

Cold finish:

0.063 in. (1.6 mm) in any 5 ft (1,524 mm), but may not exceed 0.063 in. x [length in feet (mm)]/[5 ft (1,524 mm)]

be reported to the producer or supplier promptly and in writing. In case of dissatisfaction with the results of the test, the producer or supplier may make claim for a rehearing.

14. Certification

14.1 When specified in the purchase order or contract, a manufacturer's certification shall be furnished to the purchaser stating that material has been manufactured, tested, and inspected in accordance with this specification, and that the test results on representative samples meet specification requirements. When specified in the purchase order or contract, a report of the test results shall be furnished.

15. Product Marking

15.1 Each bundle, box, or bar shall be properly tagged with metal tags showing heat number, UNS number, condition, specification number, and size to assure proper identification.

16. Packaging and Package Marking

16.1 Bars or wire shall be bundled or boxed in such a manner as to assure safe delivery to their destination when properly transported by any common carrier.

17. Keywords

17.1 bar; nickel-iron-chromium-molybdenum-columbium; UNS N08700; wire

SUPPLEMENTARY REQUIREMENTS

The following supplementary requirement may be made a requirement when the purchaser specifies it to be applicable.

S1. Intergranular Corrosion Test

S1.1 Material shall pass an intergranular corrosion test. Specimens taken in the as-supplied condition, sensitized 1 h at 1,250°F (677°C), and tested in accordance with Practice C of Practices A 262 shall exhibit a corrosion rate equal to or less than 2.5 mils/month (165 mg/dm^2· day).

SPECIFICATION FOR UNS N08904, UNS N08925, AND N08926 WELDED PIPE

SB-673

(Identical with ASTM Specification B 673-91.)

1. Scope

1.1 This specification covers UNS N08904, UNS N08925, and UNS N08926 welded pipe for general corrosion applications.

1.2 This specification covers pipe sizes in schedules shown in Table 1.

1.3 The values stated in inch-pound units are to be regarded as the standard. The values given in parentheses are for information only.

2. Referenced Documents

2.1 *ASTM Standards:*

E 8 Test Methods of Tension Testing of Metallic Materials

E 29 Practice for Using Significant Digits in Test Data to Determine Conformance with Specifications

E 213 Practice for Ultrasonic Examination of Metal Pipe and Tubing

E 354 Test Methods for Chemical Analysis of High-Temperature, Electrical, Magnetic, and Other Similar Iron, Nickel, and Cobalt Alloys

E 426 Practice for Electromagnetic (Eddy-Current) Examination of Seamless and Welded Tubular Products, Austenitic Stainless Steel, and Similar Alloys

E 571 Practice for Electromagnetic (Eddy-Current) Examination of Nickel and Nickel Alloy Tubular Products

3. Classification

3.1 *Class 1*— Welded, cold worked, solution treated, and nondestructively tested in accordance with 11.4.1.

3.2 *Class 2*— Welded, cold worked, solution treated, and nondestructively tested in accordance with 11.4.2.

3.3 *Class 3*— As welded, solution treated, and nondestructively tested in accordance with 11.4.1.

4. Ordering Information

4.1 Orders for material under this specification shall include the following information:

4.1.1 Alloy name or UNS number.

4.1.2 ASTM designation and year of issue.

4.1.3 *Dimensions:*

4.1.3.1 Pipe size (Table 1).

4.1.3.2 Length (specific or random).

4.1.4 Class (see 11.4).

4.1.5 Quantity (feet or number of pieces).

4.1.6 *Certification*—State if certification is required (Section 16).

4.1.7 *Samples for Product (Check) Analysis*—State whether samples for product (check) analysis should be furnished (see 10.2).

4.1.8 *Purchaser Inspection*—If the purchaser wishes to witness tests or inspection of material at the place of manufacture, the purchase order must so state, indicating which tests or inspections are to be witnessed (Section 14).

5. Materials and Manufacture

5.1 Pipe shall be made from flat-rolled alloy by an automatic welding process with no addition of filler metal. Subsequent to welding and prior to final solution treatment, Class 1 and Class 2 material shall be cold worked either in both weld and base metal or in weld metal only.

NOTE 1 — The recommended heat treatment shall consist of heating to a temperature of 1985 to 2100°F (1085 to 1150°C) for UNS N08904

TABLE 1
DIMENSIONS OF WELDED PIPE

Nominal Pipe Size, in.	Outside Diameter		Nominal Wall Thickness, in.									
			Schedule	5S[A]	Schedule	10S[A]	Schedule	40S	Schedule	80S	Schedule	160S
1/8	0.405	10.29	...	...	0.049	1.25	0.068	1.73	0.095	2.41	...	...
1/4	0.540	13.72	...	...	0.065	1.65	0.088	2.24	0.119	3.02	...	...
3/8	0.675	17.15	...	...	0.065	1.65	0.091	2.31	0.126	3.20	...	...
1/2	0.840	21.34	0.065	1.65	0.083	2.11	0.109	2.77	0.147	3.73	0.187	4.75
3/4	1.050	26.67	0.065	1.65	0.083	2.11	0.113	2.87	0.154	3.91	0.218	5.54
1	1.315	33.40	0.065	1.65	0.109	2.77	0.133	3.38	0.179	4.46	0.250	6.35
1 1/4	1.660	42.16	0.065	1.65	0.109	2.77	0.140	3.56	0.191	4.85	0.250	6.35
1 1/2	1.900	48.26	0.065	1.65	0.109	2.77	0.145	3.68	0.200	5.08	0.281	7.14
2	2.375	60.33	0.065	1.65	0.109	2.77	0.154	3.91	0.218	5.54	0.343	8.71
2 1/2	2.875	73.03	0.083	2.11	0.120	3.05	0.203	5.16	0.276	7.01	0.375	9.52
3	3.500	88.90	0.083	2.11	0.120	3.05	0.216	5.49	0.300	7.62	0.438	11.12
3 1/2	4.000	101.60	0.083	2.11	0.120	3.05	0.226	5.74	0.318	8.08	...	...
4	4.500	114.30	0.083	2.11	0.120	3.05	0.237	6.02	0.337	8.56	0.581	13.41
5	5.563	141.30	0.109	2.77	0.134	3.40	0.258	6.55	0.375	9.52	0.625	15.88
6	6.625	168.30	0.109	2.77	0.134	3.40	0.280	7.11	0.432	10.97	0.718	18.24
8	8.625	219.07	0.109	2.77	0.148	3.76	0.322	8.18	0.500	12.70	0.906	23.01
10	10.750	273.05	0.134	3.40	0.165	4.19	0.365	9.27	0.500[B]	12.70[B]	1.125	28.58
12	12.75	323.85	0.156	3.96	0.180	4.57	0.375	9.52	0.500[B]	12.70[B]	1.312	33.32
14	14.00	355.60	0.156[C]	3.96	0.188	4.78	0.375	9.52	0.500	12.70	...	...
16	16.00	406.40	0.165[C]	4.19	0.188	4.78	0.375	9.52	0.500	12.70	...	...
18	18.00	457.20	0.165[C]	4.19	0.188	4.78	0.375	9.52	0.500	12.70	...	...
20	20.00	508.00	0.188[C]	4.78	0.218[C]	5.54	0.375	9.52	0.500	12.70	...	...
22	22.00	558.80	0.188[C]	4.78	0.218[C]	5.54	0.375	9.52	0.500	12.70	...	...
24	24.00	609.60	0.218[C]	5.54	0.250	6.35	0.375	9.52	0.500	12.70	...	...
30	30.00	762.00	0.250[C]	6.35	0.312	7.92	0.375	9.52	0.500	12.70	...	...

NOTE 1 — The following table is a partial reprint of Table 1 of ANSI B36.19.
NOTE 2 — The decimal thicknesses listed for the respective pipe sizes represent their nominal wall dimensions.
NOTE 3 — 1 in. = 25.4 mm.

[A] Schedule 5S and 10S wall thicknesses do not permit threading in accordance with ANSI B2.1.
[B] These do not conform to ANSI B31.10.
[C] These do not conform to ANSI for Welded and Seamless Wrought Steel Pipe (ANSI B36.10).

or 2010 to 2100°F (1100 to 1150°C) for UNS N08925 and UNS N08926, followed by quenching in water or rapid cooling by other means.

5.2 Pipe shall be furnished with oxide removed. When solution treatment is performed in a protective atmosphere, descaling is not necessary.

NOTE 2 — Pipe produced with the addition of filler metal is available. The manufacturer must be consulted for applicable requirements.

6. Chemical Composition

6.1 The material shall conform to the requirements as to chemical composition prescribed in Table 2.

6.2 If a product (check) analysis is performed by the purchaser, the material shall conform to the product (check) analysis variations prescribed in Table 2.

7. Mechanical and Other Requirements

7.1 *Mechanical Properties*— The material shall conform to the mechanical properties prescribed in Table 3.

7.2 *Flattening Test*— A section of pipe not less than 4 in. (102 mm) in length shall be capable of withstanding, without through wall cracking, flattening under a load applied gradually at room temperature until the distance between the platens is five times the wall thickness. The weld shall be positioned 90° from the direction of the applied flattening force.

7.3 *Nondestructive Tests:*

7.3.1 *Hydrostatic Test*— Each piece shall be tested at a pressure calculated by the following equation, but such pressure shall not exceed 1000 psi (6.9 MPa):

$$P = 2St/D$$

or

$$S = PD/2t$$

where:

P = hydrostatic test pressure, psi (or MPa),

TABLE 2
CHEMICAL REQUIREMENTS

Element	UNS N08904	UNS N08925	UNS N08926	Product (Check) Analysis Variations, under min or over max of the Specified Limit of Element, % UNS N08904 UNS N08925	 UNS N08926
Carbon, max	0.020	0.020	0.020	0.005	0.005
Manganese, max	2.0	1.0	2.00	0.04	0.04
Phosphorus, max	0.045	0.045	0.03	0.005	0.005
Sulfur, max	0.035	0.030	0.01	0.005	0.003
Silicon, max	1.00	0.50	0.5	0.05	0.03
Nickel	23.0 to 28.0	24.0 to 26.0	24.00 to 26.00	0.20	0.25
Chromium	19.0 to 23.0	19.0 to 21.0	19.00 to 21.00	0.20	0.25
Molybdenum	4.0 to 5.0	6.0 to 7.0	6.0 to 7.0	0.10	0.15
Copper	1.0 to 2.0	0.8 to 1.5	0.5 to 1.5	0.10	0.04
Nitrogen	...	0.1 to 0.2	0.15 to 0.25	...	0.01
Iron[A]	balance	balance	balance	...	...

[A] Iron shall be determined arithmetically by difference.

TABLE 3
MECHANICAL PROPERTIES

Alloy	Temper	Tensile Strength, min, psi (Mpa)	Yield Strength, 0.2% offset, min, psi (MPa)	Elongation in 2 in. or 50 mm, (or 4*D*), min, %
UNS N08904	solution annealed	71 (490)	31 (220)	35
UNS N08925	solution annealed	87 (600)	43 (300)	40
UNS N08926	solution annealed	94 (650)	43 (295)	35

S = allowable fiber stress for material in the condition furnished, as follows: Solution treated, 20 000 psi (138 MPa),
t = specified wall thickness, in. (or mm), and
D = specified outside diameter, in. (or mm).

7.3.1.1 The test pressure shall be held for a minimum of 5 s.

7.3.1.2 Visual examination is to be made when the material is under pressure. The full length of material must be examined for leaks. If any pipe shows leaks during the hydrostatic test, it shall be rejected.

7.3.2 *Pneumatic (Air Underwater) Test* — Each piece shall be tested at a pressure of 150 psi (1.05 MPa).

7.3.2.1 The test pressure shall be held for a minimum of 5 s.

7.3.2.2 Visual examination is to be made when the material is submerged and is under pressure. The full length of material must be examined for leaks. If any piece shows leaks during the test, it shall be rejected.

7.3.3 *Electric Test* — Each pipe shall be tested with an electric test in accordance with either Practice E 213, E 571, or E 426.

7.3.3.1 For eddy-current testing, the calibration pipe shall contain, at the option of the manufacturer, any one of the following discontinuities to establish a minimum sensitivity level for rejection. The discontinuity shall be placed in the weld if visible.

(a) Drilled Hole — A hole, not larger than 0.031 in. (0.79 mm) in diameter shall be drilled radially and completely through the wall, care being taken to avoid distortion of the material while drilling.

(b) Transverse Tangential Notch — Using a round file or tool with a $\frac{1}{4}$-in. (6.4-mm) diameter, a notch shall be filed or milled tangential to the surface and transverse to the longitudinal axis of the material. Said notch shall have a depth not exceeding $12\frac{1}{2}\%$ of the specified wall thickness of the material or 0.004 in. (0.102 mm), whichever is greater.

(c) Longitudinal Notch — A notch 0.031 in. (0.79 mm) or less in width shall be machined in a radial plane parallel to the material axis on the outside surface of the pipe to have a depth not exceeding $12\frac{1}{2}\%$ of the specified wall thickness of the material or 0.004 in. (0.102 mm), whichever is greater. The length of the notch shall be compatible with the testing method.

7.3.3.2 For ultrasonic testing, the longitudinal calibration reference notches shall be at the option of the manufacturer, any one of the three common notch shapes in accordance with Practice E 213. The depth of the notch shall not exceed 12½% of the specified wall thickness of the material or 0.004 in. (0.102 mm), whichever is greater. The notch shall be placed in the weld if visible.

7.3.3.3 *Acceptance and Rejection* — Material producing a signal equal to or greater than the calibration imperfection shall be subject to rejection.

(a) Test signals produced by imperfections that cannot be identified or produced by cracks or crack-like imperfections shall result in rejection of the pipe, subject to rework and retest. To be accepted, the material must pass the same electric test to which it was originally subjected provided that the dimensional requirements are met.

(b) If the imperfection is judged as injurious, the pipe shall be rejected but may be reconditioned and retested providing the dimensional requirements are met. To be accepted, retested material shall meet the original electric test requirements.

(c) If the imperfection is explored to the extent that it can be identified as noninjurious, the material may be accepted without further test providing the imperfection does not encroach on the minimum wall thickness.

8. Dimensions and Permissible Variations

8.1 The outside diameter and nominal wall thickness shall not exceed the permissible variations prescribed in Table 4.

8.1.1 Material having a specified wall thickness that is 3%, or less, of the outside diameter, cannot be straightened properly without a certain amount of ovality resulting in the diameter. The limits to this ovality are stated in Footnote *C* to Table 4.

8.2 *Straightness* — Material shall be reasonably straight and free of bends or kinks.

8.3 *Length* — Variations from the specified length shall not exceed the amounts prescribed in Table 5.

9. Workmanship, Finish, and Appearance

9.1 The material shall be uniform in quality and temper, smooth, commercially straight, and free of injurious imperfections.

10. Sampling

10.1 *Lot* — Definition:

10.1.1 A lot for chemical analysis shall consist of one heat.

TABLE 4
PERMISSIBLE VARIATIONS IN OUTSIDE DIAMETER[A] AND WALL THICKNESS[B]

	Permissible Variations in Outside Diameter,[C] in. (mm)	
NPS	+	−
⅛	0.005 (0.13)	0.005 (0.13)
¼	0.005 (0.13)	0.005 (0.13)
⅜	0.0075 (0.19)	0.0075 (0.19)
½	0.0075 (0.19)	0.0075 (0.19)
¾	0.010 (0.25)	0.0075 (0.19)
1	0.010 (0.25)	0.0075 (0.19)
1¼	0.010 (0.25)	0.010 (0.25)
1½	0.015 (0.38)	0.010 (0.25)
2	0.018 (0.46)	0.010 (0.25)
2½	0.018 (0.46)	0.010 (0.25)
3	0.025 (0.64)	0.010 (0.25)
3½	0.025 (0.64)	0.015 (0.38)
4	0.025 (0.64)	0.015 (0.38)
5	0.025 (0.64)	0.020 (0.51)
6	0.025 (0.64)	0.030 (0.76)

[A] These permissible variations in outside diameter apply only to material as finished at the mill before subsequent swaging, expanding, bending, polishing, or other fabricating operations.

[B] The wall thickness variation shall not exceed ±12% of the nominal wall thickness.

[C] Ovality is the difference between the maximum and the minimum outside diameter measured at any one cross section. There is no additional tolerance for ovality on material having a nominal wall thickness for more than 3% of the outside diameter. On this material, the average of the maximum and the minimum outside diameter measurements will fall within the outside diameter tolerance shown in Table 4. An additional ovality allowance of twice the outside diameter tolerance spreads shown in Table 4, applied ±½, is allowed for material having a nominal wall thickness of 3% or less of the nominal outside diameter.

TABLE 5
PERMISSIBLE VARIATIONS IN LENGTH[A]

	Cut Length, in. (mm)	
Outside Diameter, in. (mm)	Over	Under
Under 2 (50.8)	⅛ (3.2)	0
2 (50.8) and over	3/16 (4.8)	0

[A] These permissible variations in length apply to pipe before bending. They apply to cut lengths up to and including 24 ft (7.3 m). For lengths over 24 ft, an additional over-tolerance of ⅛ in. (3.2 mm) for each 10 ft (3.0 m) or fraction thereof shall be permissible up to a maximum additional over-tolerance of ½ in. (12.7 mm).

10.1.2 A lot for mechanical properties and flattening testing shall consist of all material from the same heat, nominal size (excepting length), and condition (temper).

10.2 *Test Material Selection:*

10.2.1 *Chemical Analysis* — Representative samples shall be taken during pouring or subsequent processing from each lot.

10.2.1.1 *Product (Check) Analysis* shall be wholly the responsibility of the purchaser.

10.2.2 *Mechanical Properties and Flattening Testing* — Samples of the material to provide test specimens shall be taken from such locations in each lot as to be representative of that lot.

11. Number of Tests

11.1 *Chemical Analysis* — One test per lot.

11.2 *Mechanical Properties* — One test per lot.

11.3 *Flattening* — One test per lot.

11.4 *Nondestructive Tests:*

11.4.1 *Class 1 and Class 3* — Each piece in each lot shall be subjected to one of the following four tests: hydrostatic, pneumatic (air underwater), eddy-current, or ultrasonic.

11.4.2 *Class 2* — Each piece in each lot shall be subjected to a leak test and an electric test as follows:

11.4.2.1 *Leak Test* — Hydrostatic or pneumatic (air underwater).

11.4.2.2 *Electric Test* — Eddy-current or ultrasonic.

11.4.3 The manufacturer shall have the option to test Class 1 or Class 2 and select the nondestructive test methods, if not specified by the purchaser.

12. Specimen Preparation

12.1 Tension test specimens shall be taken from material in the final condition (temper) and tested in the direction of fabrication.

12.1.1 Whenever possible, all material shall be tested in full tubular size. When testing in full tubular size is not possible, longitudinal strip specimens shall be used. In the event of disagreement when full tubular testing is not possible, a longitudinal strip specimen with reduced gage length in accordance with Test Methods E 8 shall be used.

13. Test Methods

13.1 Determine the chemical composition, mechanical, and other properties of the material as enumerated in this specification, in case of disagreement, in accordance with the following methods:

Test	ASTM Designation
Chemical analysis	E 354
Tension	E 8
Rounding procedure	E 29

13.2 For purposes of determining compliance with the specified limits for requirements of the properties listed in the following table, an observed value or a calculated value shall be rounded as indicated, in accordance with the rounding method of Practice E 29:

Test	Rounded Unit for Observed or Calculated Value
Chemical composition and tolerances (when expressed in decimals)	Nearest unit in the last right-hand place of figures of the specified limit. If two choices are possible, as when the digits dropped are exactly a 5 or a 5 followed only by zeros, choose the one ending in an even digit, with zero defined as an even digit.
Tensile strength, and yield strength	Nearest 1000 psi (6.9 MPa)
Elongation	Nearest 1%

14. Inspection

14.1 Inspection of the material shall be agreed upon between the purchaser and the supplier as part of the purchase contract.

15. Rejection and Rehearing

15.1 Material that fails to conform to the requirements of this specification may be rejected. Rejection should be reported to the producer or supplier promptly and in writing. In case of dissatisfaction with the results of the test, the producer or supplier may make claim for a rehearing.

16. Certification

16.1 When specified in the purchase order or contract, a producer's or supplier's certification shall be furnished to the purchaser that the material was manufactured, sampled, tested, and inspected in accordance with this specification and has been found to meet the requirements. When specified in the purchase order or contract, a report of the test results shall be furnished.

17. Product Marking

17.1 The name or brand of the manufacturer, the trade name of the material or UNS number, the letters ASTM, the specification number, heat number, class, and nominal size shall be legibly stenciled on each piece ½ in. (12.7 mm) and over in outside diameter, provided the length is not under 3 ft (914 mm). The marking shall be by any method that will not result in harmful contamination.

17.1.1 For material less than ½ in. (12.7 mm) in outside diameter and material under 3 ft (914 mm) in length, the information specified in 17.1 shall be either stenciled or marked on a tag securely attached to the bundle or box in which the pipe is shipped.

18. Packaging and Package Marking

18.1 Each bundle or shipping container shall be marked with the name or brand of the manufacturer; the trade name of the material or UNS number; the letters ASTM; the specification number; heat number; class; and nominal size; gross, tare, and net weight; consignor and consignee address; contract or order number; or such other information as may be defined in the contract or order.

SPECIFICATION FOR UNS N08904, UNS N08925, AND UNS N08926 WELDED TUBE

SB-674

(Identical with ASTM Specification B 674-91.)

1. Scope

1.1 This specification covers UNS N08904, UNS N08925, and UNS N08926 welded tube for general corrosion applications.

1.2 This specification covers outside diameter and nominal wall tube.

1.2.1 The tube sizes covered by this specification are $\frac{1}{8}$ to 5 in. (3.2 to 127 mm) in outside diameter and 0.015 to 0.320 in. (0.38 to 8.13 mm), inclusive, in wall thickness.

1.3 The values stated in inch-pound units are to be regarded as the standard. The values stated in parentheses are for information only.

2. Referenced Documents

2.1 *ASTM Standards:*

E 8 Test Methods of Tension Testing of Metallic Materials

E 29 Practice for Using Significant Digits in Test Data to Determine Conformance with Specifications

E 213 Practice for Ultrasonic Examination of Metal Pipe and Tubing

E 354 Test Methods for Chemical Analysis of High-Temperature, Electrical, Magnetic, and Other Similar Iron, Nickel, and Cobalt Alloys

E 426 Practice for Electromagnetic (Eddy-Current) Examination of Seamless and Welded Tubular Products, Austenitic Stainless Steel, and Similar Alloys

E 571 Practice for Electromagnetic (Eddy-Current) Examination of Nickel and Nickel Alloy Tubular Products

3. Classification

3.1 *Class 1* — Welded, cold worked, solution treated, and nondestructively tested in accordance with 11.5.1.

3.2 *Class 2* — Welded, cold worked, solution treated, and nondestructively tested in accordance with 11.5.2.

4. Ordering Information

4.1 Orders for material under this specification shall include the following information:

4.1.1 Alloy name or UNS number.

4.1.2 ASTM designation and date of issue.

4.1.3 *Dimensions* :

4.1.3.1 Outside diameter and nominal wall thickness.

NOTE 1 — Tube produced to outside diameter and minimum wall thickness may be furnished upon agreement between the manufacturer and the purchaser.

4.1.3.2 Length (specific or random).

4.1.4 Class (see 11.5).

4.1.5 Quantity (feet or number of pieces).

4.1.6 *Certification* — State if certification is required (Section 16).

4.1.7 *Samples for Product (Check) Analysis* — State whether samples for product (check) analysis should be furnished (see 10.2).

4.1.8 *Purchaser Inspection* — If the purchaser wishes to witness tests or inspection of material at the place of manufacture, the purchase order must so state indicating which tests or inspections are to be witnessed (Section 14).

5. Materials and Manufacture

5.1 Tube shall be made from flat-rolled alloy by an automatic welding process with no addition of filler metal.

TABLE 1
CHEMICAL REQUIREMENTS

Element	Composition, %			Product (Check) Analysis Variations, under min or over max, of the Specified Limit of Element, %	
	UNS N08904	UNS N08925	UNS N08926	UNS N08904 UNS N08925	UNS N08926
Carbon, max	0.020	0.020	0.020	0.005	0.005
Manganese, max	2.00	1.00	2.00	0.04	0.04
Phosphorus, max	0.045	0.045	0.03	0.005	0.005
Sulfur, max	0.035	0.030	0.01	0.005	0.003
Silicon, max	1.00	0.50	0.5	0.05	0.03
Nickel	23.0 to 28.0	24.0 to 26.0	24.00 to 26.00	0.20	0.25
Chromium	19.0 to 23.0	19.0 to 21.0	19.00 to 21.00	0.20	0.25
Molybdenum	4.0 to 5.0	6.0 to 7.0	6.0 to 7.0	0.10	0.15
Copper	1.0 to 2.0	0.8 to 1.5	0.5 to 1.5	0.10	0.04
Nitrogen	...	0.1 to 0.2	0.15 to 0.25	...	0.01
Iron	balance	balance	balance	...	...

TABLE 2
MECHANICAL PROPERTIES

Alloy	Temper	Tensile Strength, min, psi (MPa)	Yield Strength, 0.2% offset, min, psi (MPa)	Elongation in 2 in. or 50 mm (or 4D), min, %
UNS N08904	solution annealed	71 (490)	31 (220)	35
UNS N08925	solution annealed	87 (600)	43 (295)	40
UNS N08926	solution annealed	94 (650)	43 (295)	35

Subsequent to welding and prior to final solution treatment, the material shall be cold worked either in both weld and base metal or in weld metal only.

NOTE 2 — The recommended heat treatment shall consist of heating to a temperature of 1985 to 2100°F (1085 to 1150°C) for UNS N08904 or 2010 to 2100°F (1100 to 1150°C) for UNS N08925 and N08926, followed by quenching in water or rapid cooling by other means.

5.2 Tube shall be furnished with oxide removed. When solution treatment is performed in a protective atmosphere, descaling is not necessary.

6. Chemical Requirements

6.1 The material shall conform to the requirements as to chemical composition prescribed in Table 1.

6.2 If a product (check) analysis is performed by the purchaser, the material shall conform to the product (check) analysis variations prescribed in Table 1.

7. Mechanical Properties and Other Requirements

7.1 *Mechanical Properties* — The material shall conform to the mechanical properties prescribed in Table 2.

7.2 *Flattening Test* — A section of tube not less than 4 in. (102 mm) in length shall be capable of withstanding, without through wall cracking, flattening under a load applied gradually at room temperature until the distance between the platens is five times the wall thickness. The weld shall be positioned 90° from the direction of the applied flattening force.

7.3 *Flange Test* — A section of tube shall be capable of having a flange turned over at a right angle to the body of the tube without through wall cracking. The width of the flange shall be not less than 15% of the tube diameter.

7.4 *Nondestructive Tests:*

7.4.1 *Hydrostatic Test* — Each piece shall be tested at a pressure calculated by the following equation, but such pressure shall not exceed 1000 psi (6.9 MPa):

$$P = 2ST/D$$

or

$$S = PD/2t$$

where:

P = hydrostatic test pressure, psi (or MPa),
S = allowable fiber stress or 20,000 psi (138 MPa),

t = specified wall thickness, in. (or mm), and
D = specified outside diameter, in. (or mm).

7.4.1.1 The test pressure shall be held for a minimum of 5 s.

7.4.1.2 Visual examination is to be made when the material is under pressure. The full length of material must be examined for leaks. If any tube shows leaks during the hydrostatic test, it shall be rejected.

7.4.2 *Pneumatic (Air Underwater) Test* — Each piece shall be tested at a pressure of 150 psi (1.05 MPa).

7.4.2.1 The test pressure shall be held for a minimum of 5 s.

7.4.2.2 Visual examination is to be made when the material is submerged and is under pressure. The full length of material must be examined for leaks. If any piece shows leaks during the test, it shall be rejected.

7.4.3 *Electric Test* — Each tube shall be tested with an electric test in accordance with either Practice E 213, E 571, or E 426.

7.4.3.1 For eddy-current testing, the calibration tube shall contain, at the option of the manufacturer, any one of the following discontinuities to establish a minimum sensitivity level for rejection. The discontinuity shall be placed in the weld if visible.

(a) Drilled Hole — A hole, not larger than 0.031 in. (0.79 mm) in diameter shall be drilled radially and completely through the wall; care being taken to avoid distortion of the material while drilling.

(b) Transverse Tangential Notch — Using a round file or tool with a ¼-in (6.4-mm) diameter, a notch shall be filed or milled tangential to the surface and transverse to the longitudinal axis of the material. Said notch shall have a depth not exceeding 12½% of the specified wall thickness of the material or 0.004 in. (0.102 mm), whichever is greater.

(c) Longitudinal Notch — A notch 0.031 in. (0.79 mm) or less in width shall be machined in a radial plane parallel to the material axis on the outside surface of the tube to have a depth not exceeding 12½% of the specified wall thickness of the material or 0.004 in. (0.102 mm), whichever is greater. The length of the notch shall be compatible with the testing method.

7.4.3.2 For ultrasonic testing, the longitudinal calibration reference notches shall be at the option of the manufacturer, any one of the three common notch shapes in accordance with Practice E 213. The depth of the notch shall not exceed 12½% of the specified wall thickness of the material or 0.004 in. (0.102 mm), whichever is greater. The notch shall be placed in the weld if visible.

7.4.3.3 *Acceptance and Rejection* — Material producing a signal equal to or greater than the calibration imperfection shall be subject to rejection.

(a) Test signals produced by imperfections that cannot be identified or produced by cracks or crack-like imperfections shall result in rejection of the tube, subject to rework and retest. To be accepted, the material must pass the same electric test to which it was originally subjected provided that the dimensional requirements are met.

(b) If the imperfection is judged as injurious, the tube shall be rejected but may be reconditioned and retested providing the dimensional requirements are met. To be accepted, retested material shall meet the original electric test requirements.

(c) If the imperfection is explored to the extent that it can be identified as noninjurious, the material may be accepted without further test providing the imperfection does not encroach on the minimum wall thickness.

8. Dimensions and Permissible Variations

8.1 The outside diameter and nominal wall thickness shall not exceed the permissible variations prescribed in Table 3.

8.1.1 Material having a specified wall thickness that is 3%, or less, of the outside diameter cannot be straightened properly without a certain amount of ovality resulting in the diameter. The limits to this ovality are stated in Footnote *B* to Table 3.

8.2 *Straightness* — Material shall be reasonably straight and free of bends or kinks.

8.3 *Length* — Variations from the specified length shall not exceed the amounts prescribed in Table 4.

9. Workmanship, Finish, and Appearance

9.1 The material shall be uniform in quality and temper, smooth, commercially straight, and free of injurious imperfections.

10. Sampling

10.1 *Lot — Definition:*

10.1.1 A lot for chemical analysis shall consist of one heat.

10.1.2 A lot for mechanical properties, flattening, and flange testing shall consist of all material from the same heat, nominal size (excepting length), and condition (temper).

TABLE 3
PERMISSIBLE VARIATIONS IN OUTSIDE DIAMETER[A] AND WALL THICKNESS

Specified Outside Diameter	Permissible Variations			
	Outside Diameter[B]		Wall Thickness, %	
	Plus	Minus	Plus	Minus
	Inches			
1/8 to 5/8, excl	0.005	0.005	15.0	15.0
5/8 to 1 1/2, incl	0.0075	0.0075	10.0	10.0
Over 1 1/2 to 3 1/2, incl	0.010	0.010	10.0	10.0
Over 3 1/2 to 4 1/2, incl	0.015	0.015	10.0	10.0
Over 4 1/2 to 5, incl	0.020	0.020	12.5	12.5
	Millimetres			
3.2 to 15.9, excl	0.13	0.13	12.5	12.5
15.9 to 38.1, incl	0.19	0.19	10.0	10.0
Over 38.1 to 88.9, incl	0.25	0.25	10.0	10.0
Over 88.9 to 114.3, incl	0.38	0.38	10.0	10.0
Over 114.3 to 127, incl	0.51	0.51	12.5	12.5

[A] These permissible variations in outside diameter apply only to material as finished at the mill before subsequent swaging, expanding, bending, polishing, or other fabricating operations.

[B] Ovality is the difference between the maximum and the minimum outside diameter measured at any one cross section. There is no additional tolerance for ovality on material having a nominal wall thickness for more than 3% of the outside diameter. On this material, the average of the maximum and the minimum outside diameter measurements will fall within the outside diameter tolerance shown in Table 3. An additional ovality allowance of twice the outside diameter tolerance spreads shown in Table 3, applied ±1/2, is allowed for material having nominal wall thickness of 3% or less of the nominal outside diameter.

TABLE 4
PERMISSIBLE VARIATIONS IN LENGTH[A]

Outside Diameter, in. (mm)	Cut Length, in. (mm)	
	Over	Under
Under 2 (50.8)	1/8 (3.18)	0
2 (50.8) and over	3/16 (4.75)	0

[A] These permissible variations in length apply to tube before bending. They apply to cut lengths up to and including 24 ft (7.3 m). For lengths over 24 ft, an additional over-tolerance of 1/8 in. (3.18 mm) for each 10 ft (3.0 m) or fraction thereof shall be permissible up to a maximum additional over-tolerance of 1/2 in. (12.7 mm).

10.2 *Test Material Selection:*

10.2.1 *Chemical Analysis* — Representative samples shall be taken during pouring or subsequent processing.

10.2.1.1 *Product (Check) Analysis* shall be wholly the responsibility of the purchaser.

10.2.2 *Mechanical Properties, Flattening, and Flange Testing* — Samples of the material to provide test specimens shall be taken from such locations in each lot as to be representative of that lot.

11. Number of Tests

11.1 *Chemical Analysis* — One test per lot.

11.2 *Mechanical Properties* — One test per lot.

11.3 *Flattening* — One test per lot.

11.4 *Flange* — One test per lot.

11.5 *Nondestructive:*

11.5.1 *Class 1* — Each piece in each lot shall be subjected to one of the following four tests: hydrostatic, pneumatic (air underwater), eddy-current, or ultrasonic.

11.5.2 *Class 2* — Each piece in each lot shall be subjected to a leak test and an electric test as follows:

11.5.2.1 *Leak Test* — Hydrostatic or pneumatic (air underwater).

11.5.2.2 *Electric Test* — Eddy-current or ultrasonic.

11.5.3 The manufacturer shall have the option to test Class 1 or Class 2 and select the nondestructive test methods, if not specified by the purchaser.

12. Specimen Preparation

12.1 Tension test specimens shall be taken from material in the final condition (temper) and tested in the direction of fabrication.

12.1.1 Whenever possible, all material shall be tested in full tubular size. When testing in full tubular size is not possible, longitudinal strip specimens shall be used. In the event of disagreement when full tubular testing is not possible, a longitudinal strip specimen with reduced gage length in accordance with Test Methods E 8 shall be used.

13. Test Methods

13.1 Determine the chemical composition, mechanical, and other properties of the material as enumerated in this specification, in case of disagreement, in accordance with the following methods:

Test	ASTM Designation
Chemical analysis	E 354
Tension	E 8
Rounding procedure	E 29

13.2 For purposes of determining compliance with the specified limits for requirements of the properties listed in the following table, an observed value or a calculated value shall be rounded as indicated, in accordance with the rounding method of Practice E 29:

Test	Rounded Unit for Observed or Calculated Value
Chemical composition and tolerances (when expressed in decimals)	Nearest unit in the last right-hand place of figures of the specified limit. If two choices are possible, as when the digits dropped are exactly a 5 or a 5 followed only by zeros, choose the one ending in an even digit, with zero defined as an even digit.
Tensile strength and yield strength	nearest 1000 psi (6.9 MPa)
Elongation	nearest 1%

14. Inspection

14.1 Inspection of the material shall be agreed upon between the purchaser and the supplier as part of the purchase contract.

15. Rejection and Rehearing

15.1 Material that fails to conform to the requirements of this specification may be rejected. Rejection should be reported to the producer or supplier promptly and in writing. In case of dissatisfaction with the results of the test, the producer or supplier may make claim for a rehearing.

16. Certification

16.1 When specified in the purchase order or contract, a producer's or supplier's certification shall be furnished to the purchaser that the material was manufactured, sampled, tested, and inspected in accordance with this specification and has been found to meet the requirements. When specified in the purchase order or contract, a report of the test results shall be furnished.

17. Product Marking

17.1 The name or brand of the manufacturer, the trade name of the material or UNS number, the letters ASTM, the specification number, heat number, class and nominal size shall be legibly stenciled on each piece ½ in (12.7 mm) and over in outside diameter, provided the length is not under 3 ft (914 mm). The marking shall be by any method that will not result in harmful contamination.

17.1.1 For material less than ½ in. (12.7 mm) in outside diameter and material under 3 ft (914 mm) in length, the information specified in 17.1 shall be either stenciled or marked on a tag securely attached to the bundle or box in which the tube is shipped.

18. Packaging and Package Marking

18.1 Each bundle or shipping container shall be marked with the name or brand of the manufacturer; the trade name of the material or UNS number; the letters ASTM; the specification number; heat number; class; and nominal size; gross, tare, and net weight; consignor and consignee address; contract or order number; or such other information as may be defined in the contract or order.

SPECIFICATION FOR UNS N08366 AND UNS N08367 WELDED PIPE

SB-675

(Identical with ASTM Specification B 675-90a except for editorial differences. Certification has been made mandatory.)

1. Scope

1.1 This specification covers UNS N08366 and UNS N08367 welded pipe for general corrosion applications.

1.2 Table 5 of this specification lists the dimensions of welded stainless steel pipe as shown in ANSI B36.19. Pipe having other dimensions may be furnished provided such pipe complies with all other requirements of this specification.

1.3 The values stated in inch-pound units are to be regarded as the standard. The values given in parentheses are for information only.

1.4 The following precautionary caveat pertains only to the test methods portion, Section 13, of this specification: *This standard does not purport to address all of the safety problems associated with its use. It is the responsibility of the user of this standard to establish appropriate safety and health practices and determine the applicability of regulatory limitations prior to use.*

2. Referenced Documents

2.1 *ASTM Standards:*

E 8 Test Methods for Tension Testing of Metallic Materials

E 29 Practice for Using Significant Digits in Test Data to Determine Conformance With Specifications

E 213 Practice for Ultrasonic Examination of Metal Pipe and Tubing

E 354 Test Methods for Chemical Analysis of High-Temperature, Electrical, Magnetic, and Other Similar Iron, Nickel, and Cobalt Alloys

E 426 Practice for Electromagnetic (Eddy-Current) Examination of Seamless and Welded Tubular Products, Austenitic Stainless Steel and Similar Alloys

E 571 Recommended Practice for Electromagnetic (Eddy-Current) Examination of Nickel and Nickel Alloy Tubular Products

2.2 *ANSI Standards:*

B1.20.1 Pipe Threads

B36.10 Welded and Seamless Wrought Steel Pipe

B36.19 Stainless Steel Pipe

3. Classification

3.1 *Class 1* — Welded, cold worked, solution treated, and nondestructively tested in accordance with 11.4.1.

3.2 *Class 2* — Welded, cold worked, solution treated, and nondestructively tested in accordance with 11.4.2.

3.3 *Class 3* — As welded, solution treated, and nondestructively tested in accordance with 11.4.1.

4. Ordering Information

4.1 Orders for material under this specification shall include the following information:

4.1.1 Alloy name or UNS number,

4.1.2 ASTM designation and year of issue,

4.1.3 Dimensions:

4.1.3.1 Pipe size (Table 5)

4.1.3.2 Length (specific or random),

4.1.4 Class (see 11.4),

4.1.5 Quantity (feet or number of pieces),

4.1.6 *Certification* — State if certification is required (Section 16),

TABLE 1
CHEMICAL REQUIREMENTS

Element	Composition Limits, % N08366	Composition Limits, % N08367	Product (Check) Analysis Variations, under min or over max, of the Specified Limit of Element, %
Carbon	0.035 max	0.030 max	0.005
Manganese	2.00 max	2.00 max	0.04
Phosphorus	0.040 max	0.040 max	0.005
Sulfur	0.030 max	0.030 max	0.005
Silicon	1.00 max	1.00 max	0.05
Chromium	20.00–22.00	20.00–22.00	0.25
Nickel	23.50–25.50	23.50–25.50	0.20
Molybdenum	6.00–7.00	6.00–7.00	0.15
Nitrogen	...	0.18–0.25	0.01
Iron[A]	balance	balance	
Copper	...	0.75 max	0.04

[A] Iron shall be determined arithmetically by difference.

4.1.7 *Samples for Product (Check) Analysis* — State whether samples for product (check) analysis should be furnished (10.2), and

4.1.8 *Purchaser Inspection* — If the purchaser wishes to witness tests or inspection of material at the place of manufacture, the purchase order must so state indicating which tests or inspections are to be witnessed (Section 14).

5. Material and Manufacture

5.1 Pipe shall be made from flat-rolled alloy by an automatic welding process with no addition of filler metal. Subsequent to welding and prior to final solution treatment, Class 1 and Class 2 material shall be cold worked either in both weld and base metal or in weld metal only.

NOTE — The recommended heat treatment shall consist of heating to a minimum temperature of 2200°F (1204°C) for UNS N08366 and 2025°F (1105°C) for UNS N08367 and quenching in water or rapidly cooling by other means.

5.2 Pipe shall be furnished with oxide removed. When solution treatment is performed in a protective atmosphere, descaling is not necessary.

6. Chemical Composition

6.1 The material shall conform to the requirements as to chemical composition prescribed in Table 1.

6.2 If a product (check) analysis is performed by the purchaser, the material shall conform to the product (check) analysis variations in Table 1.

TABLE 2
MECHANICAL PROPERTIES

Type	Condition (Temper)	Tensile Strength, min, ksi (MPa)	Yield Strength, (0.2% Offset), min, ksi (MPa)	Elongation in 2 in. or 50 mm (or 4*D*), min, %
N08366	Solution treated	75 (517)	30 (206)	30
N08367	Solution treated	95 (655)	45 (310)	30

7. Mechanical Properties and Other Requirements

7.1 *Mechanical Properties* — The material shall conform to the mechanical properties prescribed in Table 2.

7.2 *Flattening Test Requirements:*

7.2.1 Flattening test specimens made in accordance with 13.4 shall show no cracks or breaks on the inside, outside, or end surfaces during the first step of the test.

7.2.2 Evidence of laminated or unsound material or of incomplete weld that is revealed during the entire flattening test shall be cause for rejection.

7.2.3 Surface imperfections not evident in the test specimens before flattening, but revealed during the first step of the flattening test, shall be judged in accordance with the finish requirements.

7.2.4 Superficial ruptures resulting from surface imperfections shall not be cause for rejection.

7.3 *Nondestructive Test Requirements:*

7.3.1 Pipe shall be subjected to a pressure test or nondestructive electric test in accordance with 11.4.

7.3.1.1 Any pipe that shows leaks during the pressure test conducted in accordance with 13.5.1.1 or 13.5.1.2 shall be rejected, but any leaking areas may be cut out and the tube retested as above.

7.3.1.2 Any pipe tested in accordance with 13.5.2.2 or 13.5.2.3 that produces a signal equal to or greater than the calibration defect shall be subject to rejection. The area producing the signal may be examined.

(a) Test signals produced by imperfections that cannot be identified or produced by cracks or crack-like defects shall result in rejection of the pipe subject to retest or rework and retest, provided the dimensional requirements are met. To be accepted, any retested pipe shall meet the test requirement.

(b) Test signals produced by imperfections such as dinges, straightener marks, loose inside diameter bead and cutting chips, scratches, steel die stamps, chattered flash trim, stop marks, and tube reducer ripple, may be

judged as injurious or noninjurious depending on visual observation of their severity or the type of signal they produce on the testing equipment used, or both.

(c) Any imperfections of the type stated in (b) exceeding 0.004 in. (0.102 mm) or 12½% of the specified wall thickness, whichever is greater in depth, shall be considered injurious.

(d) If the imperfection is judged as injurious, the pipe shall be rejected subject to retest or rework and retest, provided that the dimensional requirements are met. To be accepted, any retested pipe shall meet the test requirements.

(e) If the imperfection is explored to the extent that it can be identified as noninjurious, the pipe may be accepted without further test providing the imperfection does not encroach on the minimum wall thickness.

8. Dimensions and Permissible Variations

8.1 The outside diameter and nominal wall thickness shall not exceed the permissible variations prescribed in Table 3.

8.1.1 Material having a specified wall thickness that is 3% or less of the outside diameter cannot be straightened properly without a certain amount of ovality resulting in the diameter. The limits to this ovality are stated in Footnote B of Table 3.

8.2 *Straightness* — Material shall be reasonably straight and free of bends or kinks.

8.3 *Length* — Variations from the specified length shall not exceed the amounts prescribed in Table 4.

9. Workmanship, Finish, and Appearance

9.1 The material shall be uniform in quality and temper, smooth, commercially straight, and free of injurious imperfections. Minor defects may be removed by grinding provided the wall thickness is not decreased to less than that permitted by Table 3.

10. Sampling

10.1 *Lot* — Definition:

10.1.1 A lot for chemical analysis shall consist of one heat.

10.1.2 A lot for mechanical properties and flattening testing shall consist of all material from the same heat, nominal size (excepting length), and condition (temper).

TABLE 3
PERMISSIBLE VARIATIONS IN OUTSIDE DIAMETER[A, B] AND WALL THICKNESS[C]

Nominal Pipe Size, in.	Permissible Variations in Outside Diameter, in. (mm)	
	+	−
⅛	0.005 (0.13)	0.005 (0.13)
¼	0.005 (0.13)	0.005 (0.13)
⅜	0.0075 (0.19)	0.0075 (0.19)
½	0.0075 (0.19)	0.0075 (0.19)
¾	0.010 (0.25)	0.0075 (0.19)
1	0.010 (0.25)	0.0075 (0.19)
1¼	0.010 (0.25)	0.010 (0.25)
1½	0.015 (0.38)	0.010 (0.25)
2	0.018 (0.46)	0.010 (0.25)
2½	0.018 (0.46)	0.010 (0.25)
3	0.025 (0.64)	0.010 (0.25)
3½	0.025 (0.64)	0.015 (0.38)
4	0.025 (0.64)	0.015 (0.38)
5	0.025 (0.64)	0.020 (0.51)
6	0.025 (0.64)	0.030 (0.76)

[A] These permissible variations in outside diameter apply only to material as finished at the mill before subsequent swaging, expanding, bending, polishing, or other fabricating operations.

[B] Ovality is the difference between the maximum and the minimum outside diameter measured at any one cross section. There is no additional tolerance for ovality on material having a nominal wall thickness for more than 3% of the outside diameter. On this material, the average of the maximum and the minimum outside diameter measurements will fall within the outside diameter tolerance shown in Table 3. An additional ovality allowance of twice the outside diameter tolerance spreads shown in Table 3, applied ±½, is allowed for material having a nominal wall thickness of 3% or less of the nominal outside diameter.

[C] The wall thickness variation shall not exceed ±12% of the nominal wall thickness.

TABLE 4
PERMISSIBLE VARIATIONS IN LENGTH[A]

Outside Diameter, in. (mm)	Cut Length, in. (mm)	
	Over	Under
Under 2 (50.8)	⅛ (3.2)	0
2 (50.8) and over	3/16 (4.8)	0

[A] These permissible variations in length apply to pipe before bending. They apply to cut lengths up to and including 24 ft (7.3 m). For lengths over 24 ft, an additional over-tolerance of ⅛ in. (3.2 mm) for each 10 ft (3.0 m) or fraction thereof shall be permissible up to a maximum additional over-tolerance of ½ in. (12.7 mm).

TABLE 5
DIMENSIONS OF WELDED PIPE

NPS Designator	Outside Diameter		Nominal Wall Thickness							
			Schedule 5S[A]		Schedule 10S[A]		Schedule 40S		Schedule 80S	
	in.	mm	in.	mm	in.	mm	in.	mm	in.	mm
1/8	0.405	10.29	...	...	0.049	1.24	0.068	1.73	0.095	2.41
1/4	0.540	13.72	...	...	0.065	1.65	0.088	2.24	0.119	3.02
3/8	0.675	17.15	...	...	0.065	1.65	0.091	2.31	0.126	3.20
1/2	0.840	21.34	0.065	1.65	0.083	2.11	0.109	2.77	0.147	3.73
3/4	1.050	26.67	0.065	1.65	0.083	2.11	0.113	2.87	0.154	3.91
1.0	1.315	33.40	0.065	1.65	0.109	2.77	0.133	3.38	0.179	4.55
1 1/4	1.660	42.16	0.065	1.65	0.109	2.77	0.140	3.56	0.191	4.85
1 1/2	1.900	48.26	0.065	1.65	0.109	2.77	0.145	3.68	0.200	5.08
2	2.375	60.33	0.065	1.65	0.109	2.77	0.154	3.91	0.218	5.54
2 1/2	2.875	73.03	0.083	2.11	0.120	3.05	0.203	5.16	0.276	7.01
3	3.500	88.90	0.083	2.11	0.120	3.05	0.216	5.49	0.300	7.62
3 1/2	4.000	101.60	0.083	2.11	0.120	3.05	0.226	5.74	0.318	8.08
4	4.500	114.30	0.083	2.11	0.120	3.05	0.237	6.02	0.337	8.56
5	5.563	141.30	0.109	2.77	0.134	3.40	0.258	6.55	0.375	9.52
6	6.625	168.28	0.109	2.77	0.134	3.40	0.280	7.11	0.432	10.97
8	8.625	219.08	0.109	2.77	0.148	3.76	0.322	8.18	0.500	12.70
10	10.750	273.05	0.134	3.40	0.165	4.19	0.365	9.27	0.500[B]	12.70[B]
12	12.750	323.85	0.156	3.96	0.180	4.57	0.375[B]	9.52[B]	0.500[B]	12.70[B]
14	14.000	355.60	0.156	3.96	0.188[B]	4.78[B]	...	...	...	...
16	16.000	406.40	0.165	4.19	0.188[B]	4.78[B]	...	...	...	...
18	18.000	457.20	0.165	4.19	0.188[B]	4.78[B]	...	...	...	...
20	20.000	508.00	0.188	4.78	0.218[B]	5.54[B]	...	...	...	...
22	22.000	558.80	0.188	4.78	0.218[B]	5.54[B]	...	...	...	...
24	24.000	609.60	0.218	5.54	0.250	6.35	...	...	...	...
30	30.000	762.00	0.250	6.35	0.312	7.92	...	...	...	...

NOTE 1 — The following table is a reprint of Table 1 of ANSI B36.19.
NOTE 2 — The decimal thicknesses listed for the respective pipe sizes represent their nominal wall dimensions.

[A] Schedule 5S and 10S wall thicknesses do not permit threading in accordance with ANSI B1.20.1.
[B] These do not conform to ANSI B36.10.

10.2 *Test Material Selection:*

10.2.1 *Chemical Analysis* — Representative samples shall be taken during pouring or subsequent processing from each lot.

10.2.2 *Product (Check) Analysis* shall be wholly the responsibility of the purchaser.

10.2.3 *Mechanical Properties and Flattening Testing*— Samples of the material to provide test specimens shall be taken from such locations in each lot as to be representative of that lot.

11. Number of Tests

11.1 *Chemical Analysis* — One test per heat.

11.2 *Mechanical Properties* — One test per lot.

11.3 *Flattening* — One test per lot.

11.4 *Nondestructive:*

11.4.1 *Class 1 and Class 3* — Each piece in each lot shall be subjected to one of the following four tests: hydrostatic, pneumatic (air underwater), eddy-current, or ultrasonic.

11.4.2 *Class 2* — Each piece in each lot shall be subjected to a leak test and an electric test as follows:

11.4.2.1 *Leak Test* — Hydrostatic or pneumatic (air underwater).

11.4.2.2 *Electric Test* — Eddy-current or ultrasonic.

11.4.3 The manufacturer shall have the option to test Class 1 or Class 2 and select the nondestructive test methods, if not specified by the purchaser.

12. Specimen Preparation

12.1 Tension test specimens shall be taken from material in the final condition (temper) and tested in the direction of fabrication.

12.1.1 Whenever possible, all material shall be tested in full tubular size. When testing in full tubular size is not possible, longitudinal strip specimens shall be used. In the event of disagreement when full tubular testing is not possible, a longitudinal strip specimen with reduced gage length in accordance with Test Methods E 8 shall be used.

13. Test Methods

13.1 Determine the chemical composition, mechanical, and other properties of the material as enumerated in this specification, in case of disagreement, in accordance with the following methods:

Test	ASTM Designation
Chemical analysis	E 354
Tension	E 8
Rounding procedure	E 29

13.2 For purposes of determining compliance with the specified limits for requirements of the properties listed in the following table, an observed value or a calculated value shall be rounded as indicated, in accordance with the rounding method of Practice E 29:

Requirements	Rounded Unit for Observed or Calculated Value
Chemical composition and tolerances (when expressed in decimals)	Nearest unit in the last right-hand place of figures of the specified limit. If two choices are possible, as when the digits dropped are exactly a 5 or a 5 followed only by zeros, choose the one ending in an even digit, with zero defined as an even digit.
Tensile strength and yield strength	Nearest 1000 psi (6.9 MPa)
Elongation	Nearest 1%

13.3 *Tension Test* — If the percentage of elongation of any test specimen is less than that specified and any part of the fracture is more than $\frac{3}{4}$ in. (19.05 mm) from the center of the gage length, as indicated by scribe marks on the specimen before testing, of if a specimen breaks due to a flaw, a retest shall be allowed.

13.4 *Flattening Test:*

13.4.1 Flatten cold a section of welded pipe not less than 4 in. (101.6 mm) in length between parallel plates in two steps. Place the weld 90 deg. from the direction of the applied force. During the first step, which is a test for ductility, flatten the pipe until the distance between the plates is less than the value of H calculated by the following equation:

$$H = (1 + e)t/(e + t/D)$$

where:

H = distance between flattening plates, in. (mm),
t = specified wall thickness of the tube, in. (mm),
D = specified or calculated outside diameter of the tube (from the specified inside diameter and wall thickness), in. (mm), and
e = deformation per unit length (constant for this alloy = 0.09)

13.4.2 During the second step, which is a test for soundness, continue the flattening until the specimen breaks or the opposite walls of the pipe meet.

13.5 *Nondestructive Tests:*

13.5.1 *Pressure Tests:*

13.5.1.1 *Hydrostatic Test* — When pipe is hydrostatically tested at the mill, test at a pressure determined by the following equation, but do not exceed 1000 psi (6.9 MPa).

$$P = 2St/D$$

or

$$S = PD/2t$$

where:

D = hydrostatic test pressure, psi or MPa,
S = allowable fiber stress or 15,000 psi (103 MPa),
t = specified wall thickness, in. or mm, and
D = specified outside diameter, in. or mm.

Hold the test pressure for a minimum of 5 s.

13.5.1.2 *Pneumatic Test:*

(a) With the internal surface clean and dry, internally pressurize the pipe to 150 psi (1.05 MPa) minimum with clean and dry compressed air while submerging it in clear water.

(b) The pipe shall be well-lighted, preferably by underwater illumination.

(c) Correct any evidence of air leakage of the pneumatic couplings prior to testing.

(d) After holding the pressure for not less than 5 s after the surface of the water becomes calm, inspect the entire length of the pipe.

13.5.2 *Nondestructive Electric Tests:*

13.5.2.1 Test each pipe with a nondestructive electric test in accordance with either Practice E 213, E 571, or E 426.

13.5.2.2 *Eddy-Current Testing:*

(a) The calibration pipe shall contain, at the option of the producer, any one of the following discontinuities to establish a minimum sensitivity level for rejection. Place the discontinuity in the weld if visible.

(b) Drilled Hole — Drill a hole not larger than 0.031 in. (0.79 mm) in diameter radially and completely through the pipe wall, taking care to avoid distortion of the pipe while drilling.

(c) Transverse Tangential Notch — Using a round tool or file with a $\frac{1}{4}$-in. (6.4-mm) diameter, file or mill a notch tangential to the surface and transverse to the longitudinal axis of the pipe. Said notch shall have a depth not exceeding $12\frac{1}{2}\%$ of the specified wall thickness of the pipe or 0.004 in. (0.102 mm), whichever is greater.

(d) Longitudinal Notch — Machine a notch 0.031 in. (0.79 mm) or less in width in a radial parallel to the pipe axis on the outside surface of the pipe to have a depth not exceeding $12\frac{1}{2}\%$ of the specified wall thickness of the pipe or 0.004 in. (0.102 mm), whichever is greater. The length of the notch shall be compatible with the testing method.

13.5.2.3 *Ultrasonic Testing* — For ultrasonic testing, the longitudinal calibration reference notches shall be, at the option of the manufacturer, any one of the three common notch shapes in accordance with Practice E 213. The depth of the notch shall not exceed $12\frac{1}{2}\%$ of the specified wall thickness of the material or 0.004 in. (0.102 mm), whichever is greater. Place the notch in the weld if visible.

14. Inspection

14.1 Inspection of the material shall be agreed upon between the purchaser and the supplier as part of the purchase contract.

15. Rejection and Rehearing

15.1 Material that fails to conform to the requirements of this specification may be rejected. Rejection should be reported to the producer or supplier promptly and in writing. In case of dissatisfaction with the results of the test, the producer or supplier may make claim for a rehearing.

16. Certification

16.1 When specified in the purchase order or contract, a producer's or supplier's certification shall be furnished to the purchaser that the material was manufactured, sampled, tested, and inspected in accordance with this specification and has been found to meet the requirements. When specified in the purchase order or contract, a report of the test results shall be furnished.

17. Product Marking

17.1 The name or brand of the manufacturer, the trade name of the material or UNS number, the letters ASTM, the specification number, heat number, class, and nominal size shall be legibly stenciled on each piece $\frac{1}{2}$ in. (12.7 mm) and over in outside diameter, provided the length is not under 3 ft (914 mm). The marking shall be by any method that will not result in harmful contamination.

17.1.1 For material less than $\frac{1}{2}$ in. (12.7 mm) in outside diameter and material under 3 ft (914 mm) in length, the information in 17.1 shall be either stenciled or marked on a tag securely attached to the bundle or box in which the pipe is shipped.

18. Packaging and Package Marking

18.1 Each bundle or shipping container shall be marked with the name or brand of the manufacturer; the trade name of the material or UNS number; the letters ASTM; the specification number; heat number, class, and nominal size; gross, tare, and net weight; consignor and consignee address; contract or order number; or such other information as may be defined in the contract or order.

SPECIFICATION FOR UNS N08366 AND UNS N08367 WELDED TUBE

SB-676

(Identical with ASTM Specification B 676-90 for the classifications covered, except for corrections to Table 2 and editorial differences.)

1. Scope

1.1 This specification covers UNS N08366 and UNS N08367 welded tube for general corrosion applications.

1.2 This specification covers outside diameter and nominal wall tube.

1.2.1 The tube sizes covered by this specification are $\frac{1}{8}$ to 5 in. (3.2 to 127 mm) in outside diameter and 0.015 to 0.320 in. (0.38 to 8.13 mm), inclusive, in wall thickness.

1.3 The values stated in inch-pound units are to be regarded as the standard. The values given in parentheses are for information only.

1.4 The following precautionary caveat pertains only to the test methods portion, Section 13, of this specification: *This standard may involve hazardous materials, operations, and equipment. This standard does not purport to address all of the safety problems associated with its use. It is the responsibility of the user of this standard to establish appropriate safety and health practices and determine the applicability of regulatory limitations prior to use.*

2. Referenced Documents

2.1 *ASTM Standards:*

E 8 Test Methods for Tension Testing of Metallic Materials

E 29 Practice for Using Significant Digits in Test Data to Determine Conformance With Specifications

E 213 Practice for Ultrasonic Examination of Metal Pipe and Tubing

E 354 Test Methods for Chemical Analysis of High Temperature, Electrical, Magnetic, and Other Similar Iron, Nickel, and Cobalt Alloys

E 426 Practice for Electromagnetic (Eddy-Current) Examination of Seamless and Welded Tubular Products, Austenitic Stainless Steel, and Similar Alloys

E 571 Practice for Electromagnetic (Eddy-Current) Examination of Nickel and Nickel Alloy Tubular Products

3. Classification

3.1 *Class 1* — Welded, cold worked, solution treated, and nondestructively tested in accordance with 11.6.1.

3.2 *Class 2* — Welded, cold worked, solution treated, and nondestructively tested in accordance with 11.6.2.

4. Ordering Information

4.1 Orders for material under this specification shall include the following information:

4.1.1 Alloy name or UNS number,

4.1.2 ASTM designation and date of issue,

4.1.3 Dimensions:

4.1.3.1 Outside diameter and nominal wall thickness.

NOTE 1 — Tube produced to outside diameter and minimum wall thickness may be furnished upon agreement between the manufacturer and the purchaser.

4.1.3.2 Length (specific or random),

4.1.4 Class (Section 3),

4.1.5 Quantity (feet or number of pieces),

4.1.6 *Certification* — State if certification is required (Section 16),

TABLE 1
CHEMICAL REQUIREMENTS

Element	Composition Limits, % N08366	Composition Limits, % N08367	Product (Check) Analysis Variations, under min or over max, of the Specified Limit of Element, %
Carbon	0.035 max	0.030 max	0.005
Manganese	2.00 max	2.00 max	0.04
Silicon	1.00 max	1.00 max	0.05
Phosphorus	0.040 max	0.040 max	0.005
Sulfur	0.030 max	0.030 max	0.005
Chromium	20.00 to 22.00	20.00 to 22.00	0.25
Nickel	23.50 to 25.50	23.50 to 25.50	0.20
Molybdenum	6.00 to 7.00	6.00 to 7.00	0.15
Nitrogen	. . .	0.18 to 0.25	0.01
Iron[A]	Remainder	Remainder	
Copper	. . .	0.75 max	0.04

[A] Iron shall be determined arithmetically by difference.

4.1.7 *Samples for Product (Check) Analysis* — State whether samples for product (check) analysis should be furnished (see 10.2), and

4.1.8 *Purchaser Inspection* — If the purchaser wishes to witness tests or inspection of material at the place of manufacture, the purchase order must so state indicating which tests or inspections are to be witnessed (Section 14).

5. Material and Manufacture

5.1 Tube shall be made from flat-rolled alloy by an automatic welding process with no addition of filler metal. Subsequent to welding and prior to final solution treatment, Class 1 and Class 2 material shall be cold worked either in both weld and base metal or in weld metal only.

NOTE 2 — The recommended heat treatment shall consist of heating to a minimum temperature of 2200°F (1204°C) for UNS N08366 and 2150°F (1180°C) for Type N08367 and quenching in water or rapidly cooling by other means.

5.2 Tube shall be furnished with oxide removed. When solution treatment is performed in a protective atmosphere, descaling is not necessary.

5.3 Type N08366 material furnished without a final heat treatment shall be chemically passivated.

6. Chemical Composition

6.1 The material shall conform to the requirements as to chemical composition prescribed in Table 1.

6.2 If a product (check) analysis is performed by the purchaser, the material shall conform to the product (check) analysis variations prescribed in Table 1.

7. Mechanical Properties and Other Requirements

7.1 *Mechanical Properties* — The material shall conform to the mechanical properties prescribed in Table 2.

7.2 *Flattening Test Requirements:*

7.2.1 Flattening test specimens made in accordance with 13.4 shall show no cracks or breaks on the inside, outside, or end surfaces during the first step of the test.

7.2.2 Evidence of laminated or unsound material or of incomplete weld that is revealed during the entire flattening test shall be cause for rejection.

7.2.3 Surface imperfections in the test specimens before flattening, but revealed during the first step of the flattening test, shall be judged in accordance with the finish requirements.

7.2.4 Superficial ruptures resulting from surface imperfections shall not be cause for rejection.

7.3 *Flange Test Requirements:*

7.3.1 Flange test specimens made in accordance with 13.5 shall show no cracking or flaws.

7.3.2 For tube less than 0.093 in. (2.36 mm) in inside diameter and tube having a wall thickness equal to or greater than the inside diameter, the flange test shall not be required.

7.4 *Reverse-Bend Requirements* — Reverse-bend test specimens made in accordance with 13.6 shall show no evidence of cracks or lack of penetration in the weld, or of overlaps resulting from the reduction in thickness of the weld areas by cold working.

7.5 *Nondestructive Test Requirements:*

7.5.1 Tube shall be subjected to a pressure test or nondestructive electric test in accordance with 11.6.

7.5.1.1 Any tube that shows leaks during the pressure tests conducted in accordance with 13.7.1.1 or 13.7.1.2 shall be rejected, but any leaking areas may be cut out and the tube retested as above.

7.5.1.2 Any tube tested in accordance with 13.7.2.2 or 13.7.2.3 that produces a signal equal to or greater than the calibration defect shall be subject to rejection. The area producing the signal may be examined.

(a) Test signals produced by imperfections that cannot be identified or produced by cracks or crack-like imperfections shall result in rejection of the tube subject to retest or rework and retest, provided the dimensional

TABLE 2
MECHANICAL PROPERTIES

Type	Condition (Temper)	Tensile Strength, min, ksi (MPa)	Yield Strength, 0.2% Offset, min, ksi (MPa)	Elongation in 2 in. or 50 mm (or 4*D*), min, %
N08366	Solution treated (Class 1 and Class 2)	75 (517)	30 (206)	30
N08367	Solution treated (Class 1 and Class 2)	100 (690)	45 (310)	30

requirements are met. To be accepted, any retested tube shall meet the test requirements.

(b) Test signals produced by imperfections such as dinges, straightener marks, loose inside diameter bead and cutting chips, scratches, steel die stamps, chattered flash trim, stop marks, and tube reducer ripple, may be judged as injurious or noninjurious depending on visual observation of their severity or the type of signal they produce on the testing equipment used, or both.

(c) Any imperfections of the type stated in (b) exceeding 0.004 in. (0.102 mm) or 12½% of the specified wall thickness, whichever is greater in depth, shall be considered injurious.

(d) If the imperfection is judged as injurious, the tube shall be rejected but subject to retest or rework and retest, provided the dimensional requirements are met. To be accepted, any retested tube shall meet the test requirements.

(e) If the imperfection is explored to the extent that it can be identified as noninjurious, the tube may be accepted without further test provided the imperfection does not encroach on the minimum wall thickness.

8. Dimensions and Permissible Variations

8.1 The outside diameter and nominal wall thickness shall not exceed the permissible variations prescribed in Table 3.

8.1.1 Material having a specified wall thickness that is 3% or less of the outside diameter cannot be straightened properly without a certain amount of ovality resulting in the diameter. The limits to this ovality are stated in Footnote B of Table 3.

8.2 *Straightness* — Material shall be reasonably straight and free of bends or kinks.

8.3 *Length* — Variations from the specified length shall not exceed the amounts prescribed in Table 4.

9. Workmanship, Finish, and Appearance

9.1 The material shall be uniform in quality and temper, smooth, commercially straight, and free of injurious imperfections. Minor defects may be removed by grinding provided the wall thickness is not decreased to less than that permitted by Table 3.

TABLE 3
PERMISSIBLE VARIATIONS IN OUTSIDE DIAMETER[A] AND WALL THICKNESS

Specified Outside Diameter	Permissible Variations: Outside Diameter[B] Plus	Outside Diameter[B] Minus	Wall Thickness, % Plus	Wall Thickness, % Minus
Inches				
⅛ to ⅝, excl	0.005	0.005	15.0	15.0
⅝ to 1½, incl	0.0075	0.0075	10.0	10.0
Over 1½ to 3½, incl	0.010	0.010	10.0	10.0
Over 3½ to 4½, incl	0.015	0.015	10.0	10.0
Over 4½ to 5, incl	0.020	0.020	12.5	12.5
Millimetres				
3.2 to 15.9, excl	0.13	0.13	12.5	12.5
15.9 to 38.1, incl	0.19	0.19	10.0	10.0
Over 38.1 to 88.9, incl	0.25	0.25	10.0	10.0
Over 88.9 to 114.3, incl	0.38	0.38	10.0	10.0
Over 114.3 to 127, incl	0.51	0.51	12.5	12.5

[A] These permissible variations in outside diameter apply only to material as finished at the mill before subsequent swaging, expanding, bending, polishing, or other fabricating operations.

[B] Ovality is the difference between the maximum and the minimum outside diameter measured at any one cross section. There is no additional tolerance for ovality on material having a nominal wall thickness for more than 3% of the outside diameter. On this material, the average of the maximum and the minimum outside diameter measurements will fall within the outside diameter tolerance shown in Table 3. An additional ovality allowance of twice the outside diameter tolerance spreads shown in Table 3, applied ±½, is allowed for material having a nominal wall thickness of 3% or less of the nominal outside diameter.

10. Sampling

10.1 *Lot* — Definition:

10.1.1 A lot for chemical analysis shall consist of one heat.

TABLE 4
PERMISSIBLE VARIATIONS IN LENGTH[A]

Outside Diameter, in. (mm)	Cut Length, in. (mm) Over	Under
Under 2 (50.8)	1/8 (3.18)	0
2 (50.8) and over	3/16 (4.75)	0

[A] These permissible variations in length apply to tube before bending. They apply to cut lengths up to and including 24 ft (7.3 m). For lengths over 24 ft an additional over-tolerance of 1/8 in. (3.18 mm) for each 10 ft (3.0 m) or fraction thereof shall be permissible up to a maximum additional over-tolerance of 1/2 in. (12.7 mm).

10.1.2 A lot for mechanical properties, flattening, flange, and reverse-bend testing shall consist of all material from the same heat, nominal size (excepting length), and condition (temper).

10.2 *Test Material Selection:*

10.2.1 *Chemical Analysis* — Representative samples shall be taken during pouring or subsequent processing from each lot.

10.2.1.1 *Product (Check) Analysis* shall be wholly the responsibility of the purchaser.

10.2.2 *Mechanical Properties, Flattening, Flange, and Reverse-Bend Testing* — Samples of the material to provide test specimens shall be taken from such locations in each lot as to be representative of that lot.

11. Number of Tests

11.1 *Chemical Analysis* — One test per lot.

11.2 *Mechanical Properties* — One test per lot.

11.3 *Flattening* — One test per lot.

11.4 *Flange* — One test per lot.

11.5 *Reverse-Bend* — One test per lot.

11.6 *Nondestructive:*

11.6.1 *Class 1 and Class 3* — Each piece in each lot shall be subjected to one of the following four tests: hydrostatic, pneumatic (air underwater), eddy-current, or ultrasonic.

11.6.2 *Class 2 and Class 4* — Each piece in each lot shall be subjected to a leak test and an electric test as follows:

11.6.2.1 *Leak Test* — Hydrostatic or pneumatic (air underwater).

11.6.2.2 *Electric Test* — Eddy-current or ultrasonic.

11.6.3 The manufacturer shall have the option to test Class 1 or Class 2 and select the nondestructive test methods, if not specified by the purchaser.

12. Specimen Preparation

12.1 Tension test specimens shall be taken from material in the final condition (temper) and tested in the direction of fabrication.

12.1.1 Whenever possible, all material shall be tested in full tubular size. When testing in full tubular size is not possible, longitudinal strip specimens shall be used. In the event of disagreement when full tubular testing is not possible, a longitudinal strip specimen with reduced gage length in accordance with Test Methods E 8 shall be used.

13. Test Methods

13.1 Determine the chemical composition, mechanical, and other properties of the material as enumerated in this specification, in case of disagreement, in accordance with the following methods:

Test	ASTM Designation
Chemical analysis	E 354
Tension	E 8
Rounding procedure	E 29

13.2 For purposes of determining compliance with the specified limits for requirements of the properties listed in the following table, an observed value or a calculated value shall be rounded as indicated, in accordance with the rounding method of Practice E 29:

Test	Rounded Unit for Observed or Calculated Value
Chemical composition and tolerances (when expressed in decimals)	Nearest unit in the last right-hand place of figures of the specified limit. If two choices are possible, as when the digits dropped are exactly a 5 or a 5 followed only by zeros, choose the one ending in an even digit, with zero defined as an even digit.
Tensile strength and yield strength	Nearest 1000 psi (6.9 MPa)
Elongation	Nearest 1%

13.3 *Tension Test* — If the percentage of elongation of any test specimen is less than that specified and any part of the fracture is more than 3/4 in. (19.05 mm) from the center of the gage length, as indicated by scribe marks on the specimen before testing, of if a specimen breaks due to a flaw, a retest shall be allowed.

13.4 *Flattening Test:*

13.4.1 Flatten cold a section of tube not less than 4 in. (101.6 mm) in length between parallel plates in two steps. Place the weld 90 deg. from the direction of the applied force. During the first step, which is a test for ductility, flatten the tube until the distance between the plates is less than the value of H calculated by the following equation:

$$H = (1 + e)t/(e + t/D)$$

where:

H = distance between flattening plates, in. (or mm),
t = specified wall thickness of the tube, in. (or mm),
D = specified outside diameter of the tube, in. (or mm), and
e = deformation per unit length (constant for this alloy = 0.09)

13.4.2 During the second step, which is a test for soundness, continue the flattening until the specimen breaks or the opposite walls of the pipe meet.

13.5 *Flange Test* — A section of the tube not less than 4 in. (101.6 mm) in length shall be capable of having a flange turned over at a right angle to the body of the tube. The width of this flange, as measured from the outside surface of the tube, shall be not less than $\frac{1}{8}$ in. (3.17 mm) nor more than $\frac{3}{4}$ in. (19.05 mm) but in all cases shall be a minimum of 15% of the outside diameter of the tube.

13.6 *Reverse-Bend Test* — Split longitudinally 90 deg. on each side of the weld a section of the tube not less than 4 in. (101.6 mm) in length. Open and bend the sample around a mandrel with a diameter four times the wall thickness, with the mandrel parallel to the weld and on the outside of the tube. The weld shall be at the point of maximum bend.

13.7 *Nondestructive Tests:*

13.7.1 *Pressure Tests:*

13.7.1.1 *Hydrostatic Test* — When tube is hydrostatically tested at the mill, test at a pressure determined by the following equation, but do not exceed 1000 psi (6.9 MPa).

$$P = 2St/D$$

or

$$S = 2PD/2t$$

where:

P = hydrostatic test pressure, psi or MPa,
S = allowable fiber stress or 15,000 psi (103 MPa),
t = specified wall thickness, in. or mm, and
D = specified outside diameter, in. or mm.

Hold the test pressure for a minimum of 5 s.

13.7.1.2 *Pneumatic Test:*

(a) With the internal surface clean and dry, internally pressurize the tube to 150 psi (1.05 MPa), minimum, with clean and dry compressed air while submerging in clear water.

(b) The tube shall be well-lighted, preferably by underwater illumination.

(c) Correct any evidence of air leakage of the pneumatic couplings prior to testing.

(d) After holding the pressure for not less than 5 s after the surface of the water becomes calm, inspect the entire length of the tube.

13.7.2 *Nondestructive Electric Tests:*

13.7.2.1 Test each tube with a nondestructive electric test in accordance with either Practice E 213, E 571, or E 426.

13.7.2.2 *Eddy-Current Testing:*

(a) The calibration tube shall contain, at the option of the producer, any one of the following discontinuities to establish a minimum sensitivity level for rejection. Place the discontinuity in the weld if visible.

(b) Drilled Hole — Drill a hole not larger than 0.031 in. (0.79 mm) in diameter radially and completely through the tube wall, taking care to avoid distortion of the tube while drilling.

(c) Transverse Tangential Notch — Using a round tool or file with a $\frac{1}{4}$-in. (6.4-mm) diameter, file or mill a notch tangential to the surface and transverse to the longitudinal axis of the tube. Said notch shall have a depth not exceeding $12\frac{1}{2}$% of the specified wall thickness of the tube or 0.004 in. (0.102 mm), whichever is greater.

(d) Longitudinal Notch — Machine a notch 0.031 in. (0.79 mm) or less in width in a radial plane parallel to the material axis on the outside surface of the tube to have a depth not exceeding $12\frac{1}{2}$% of the specified wall thickness of the material or 0.004 in. (0.102 mm), whichever is greater. The length of the notch shall be compatible with the testing method.

13.7.2.3 *Ultrasonic Testing* — For ultrasonic testing, the longitudinal calibration reference notches shall be, at the option of the manufacturer, any one of the three common notch shapes in accordance with Practice E 213. The depth of the notch shall not exceed $12\frac{1}{2}$% of the specified wall thickness of the material or 0.004 in. (0.102 mm), whichever is greater. Place the notch in the weld if visible.

14. Inspection

14.1 Inspection of the material shall be agreed upon between the purchaser and the supplier as part of the purchase contract.

15. Rejection and Rehearing

15.1 Material that fails to conform to the requirements of this specification may be rejected. Rejection should be reported to the producer or supplier promptly and in writing. In case of dissatisfaction with the results of the test, the producer or supplier may make claim for a rehearing.

16. Certification

16.1 When specified in the purchase order or contract, a producer's or supplier's certification shall be furnished to the purchaser that the material was manufactured, sampled, tested, and inspected in accordance with this specification and has been found to meet the requirements. When specified in the purchase order or contract, a report of the test results shall be furnished.

17. Product Marking

17.1 The name or brand of the manufacturer, the trade name of the material or UNS number, the letters ASTM, the specification number, heat number, class, and nominal size shall be legibly stenciled on each piece ½ in. (12.7 mm) and over in outside diameter, provided the length is not under 3 ft (914 mm). The marking shall be by any method that will not result in harmful contamination.

17.1.1 For material less than ½ in. (12.7 mm) in outside diameter and material under 3 ft (914 mm) in length, the information specified in 17.1 shall be either stenciled or marked on a tag securely attached to the bundle or box in which the tube is shipped.

18 Packaging and Package Marking

18.1 Each bundle or shipping container shall be marked with the name or brand of the manufacturer; the trade name of the material or UNS number; the letters ASTM; the specification number; heat number, class, and nominal size; gross, tare, and net weight; consignor and consignee address; contract or order number; or such other information as may be defined in the contract or order.

SPECIFICATION FOR UNS N08904, UNS N08925, AND UNS N08926 SEAMLESS PIPE AND TUBE

SB-677

(Identical with ASTM Specification B 677-99 except that certification has been made mandatory.)

1. Scope

1.1 This specification covers UNS N08904, UNS N08925, and UNS N08926 seamless, cold-worked or hot-finished pipe and tube intended for general corrosive service.

1.2 The values stated in inch-pound units are to be regarded as the standard.

2. Referenced Documents

2.1 *ASTM Standards:*

A 450/A 450M Specification for General Requirements for Carbon, Ferritic Alloy, and Austenitic Alloy Steel Tubes

E 8 Test Methods for Tension Testing of Metallic Materials

E 29 Practice for Using Significant Digits in Test Data to Determine Conformance with Specifications

E 354 Test Methods for Chemical Analysis of High-Temperature, Electrical, Magnetic, and Other Similar Iron, Nickel, and Cobalt Alloys

3. Terminology Definitions

3.1 *average diameter* — the average of the maximum and minimum outside diameters as determined at any one cross section of the tube or pipe.

3.2 *pipe* — seamless tube conforming to the particular dimensions commercially known as standard pipe sizes (Appendix X1).

3.3 *tube* — a hollow product of round or any other cross section having a continuous periphery.

4. Ordering Information

4.1 Orders for materials under this specification shall include the following information:

4.1.1 Alloy name or UNS number.

4.1.2 ASTM designation and year of issue.

4.1.3 Finish.

4.1.4 *Dimensions:*

4.1.4.1 *Tube* — Outside diameter and the average or minimum wall thickness.

4.1.4.2 *Pipe* — Standard pipe size and schedule (Appendix X1).

4.1.4.3 *Length,* (cut to length or random).

4.1.5 Quantity (feet or number of pieces).

4.1.6 *Nondestructive Testing* (see 7.2):

4.1.6.1 *Pressure Requirements* — Test pressure if other than required by 7.2.1.

4.1.6.2 Specify if an electric test is to be performed (see 7.2.2).

4.1.7 *Ends* — Plain ends cut and deburred will be furnished. If threaded ends or ends beveled for welding are desired, give details.

4.1.8 *Certification* — Certification is required (Section 16).

4.1.9 *Samples for Product (Check) Analysis* — State whether samples for product (check) analysis should be furnished (see 6.2).

4.1.10 *Purchaser Inspection* — If the purchaser wishes to witness tests or inspection of material at the place of manufacture, the purchase order must so state, indicating which tests or inspections are to be witnessed (Section 14).

5. Materials and Manufacture

5.1 The material shall be supplied in the solution-treated condition.

TABLE 1
CHEMICAL REQUIREMENTS

Element	UNS N08904	UNS N08925	UNS N08926	Product (Check) Analysis Variations, under min or over max of the Specified Limit of Element, %: UNS N08904 UNS N08925	Product (Check) Analysis Variations, under min or over max of the Specified Limit of Element, %: UNS N08926
Carbon, max	0.020	0.020	0.020	0.005	0.005
Manganese, max	2.0	1.0	2.00	0.04	0.04
Phosphorus, max	0.045	0.045	0.03	0.005	0.005
Sulfur, max	0.035	0.030	0.01	0.005	0.003
Silicon, max	1.00	0.50	0.5	0.05	0.03
Nickel	23.0 to 28.0	24.0 to 26.0	24.00 to 26.00	0.20	0.25
Chromium	19.0 to 23.0	19.0 to 21.0	19.00 to 21.00	0.20	0.25
Molybdenum	4.0 to 5.0	6.0 to 7.0	6.0 to 7.0	0.10	0.15
Copper	1.0 to 2.0	0.8 to 1.5	0.5 to 1.5	0.10	0.04
Nitrogen	...	0.1 to 0.2	0.15 to 0.25	...	0.01
Iron[A]	balance	balance	balance	...	...

TABLE 2
MECHANICAL PROPERTIES OF PIPE AND TUBE

Alloy	Temper	Tensile Strength, min, psi (MPa)	Yield Strength, 0.2% offset, min, psi (MPa)	Elongation in 2 in. or 50 mm (or 4*D*), min, %
UNS N08904	solution annealed	71 (490)	31 (220)	35
UNS N08925	solution annealed	87 (600)	43 (300)	40
UNS N08926	solution annealed	94 (650)	43 (295)	35

NOTE 1 — The recommended heat treatment shall consist of heating to a temperature of 1950 to 2100°F (1065 to 1150°C) for UNS N08904 or 2010 to 2100°F (1100 to 1150°C) for UNS N08925 and UNS N08926, followed by quenching in water or rapid cooling by other means.

6. Chemical Composition

6.1 The material shall conform to the requirements as to chemical composition prescribed in Table 1.

6.2 If a product (check) analysis is performed by the purchaser, the material shall conform to the product (check) analysis variations prescribed in Table 1.

7. Mechanical Properties and Other Requirements

7.1 *Mechanical Properties* — The material shall conform to the mechanical properties prescribed in Table 2.

7.2 *Nondestructive Tests:*

Each pipe and tube shall be subjected to either a hydrostatic test or a nondestructive electric test in accordance with specification A 450/A 450M, at the manufacturer's option. The purchaser may specify which test is to be used.

7.2.1 *Hydrostatic Test:*

7.2.1.1 Each pipe or tube with an outside diameter $\frac{1}{8}$ in. (3.2 mm) and larger and with wall thickness of 0.015 in. (0.38 mm) and over shall be tested by the manufacturer to an internal hydrostatic pressure of 1000 psi (6.9 MPa) provided that the fiber stress calculated in accordance with the following equation does not exceed the allowable fiber stress, S, indicated below:

$$P = 2St/D \quad (1)$$

where:

P = hydrostatic test pressure, psi (or MPa),
S = allowable fiber stress for material in the condition (temper) furnished, 20 000 psi (138 MPa),
t = minimum wall thickness, in. (or mm); equal to the specified average wall minus the permissible "minus" wall tolerance, Table 3, or the specified minimum wall thickness, and
D = outside diameter of the tube, in. (or mm).

7.2.1.2 The test pressure shall be held for a minimum of 5 s.

7.2.1.3 Visual examination is to be made when the material is under pressure. The full length of material

TABLE 3
PERMISSIBLE VARIATIONS FOR OUTSIDE DIAMETER AND WALL THICKNESS

	Permissible Variations					
	Outside Diameter, in. (mm)		Thickness of Specified Average Wall, %		Thickness of Specified Minimum Wall, %	
Nominal Outside Diameter, in. (mm)	Plus	Minus	Plus	Minus	Plus	Minus
Cold-Worked Pipe and Tube:						
Up to 5/8 (16), excl	0.005 (0.13)	0.005 (0.13)	15.0	15.0	30	0
5/8 (16) to 1 1/2 (38), incl	0.0075 (0.19)	0.0075 (0.19)	10.0	10.0	20	0
Over 1 1/2 (38) to 3 1/2 (89), incl	0.010 (0.25)	0.010 (0.25)	10.0	10.0	22	0
Over 3 1/2 (89) to 4 1/2 (114), incl	0.015 (0.38)	0.015 (0.38)	10.0	10.0	22	0
Over 4 1/2 (114) to 6 (152), incl	0.020 (0.51)	0.020 (0.51)	12.5	12.5	25	0
Over 6 (152) to 6 5/8 (168), incl	0.025 (0.64)	0.025 (0.64)	12.5	12.5	25	0
Hot-Finished Tube[A, B]*:*						
1 1/2 (38.1) to 5 1/2 (139.7), excl	0.031 (0.79)	0.031 (0.79	12.5	12.5	28.5	0
5 1/2 (139.7) to 9 1/2 (234.95) incl	0.047 (1.19)	0.047 (1.19)	12.5	12.5	28.5	0

NOTE — *Ovality* — The permissible variations in this table apply to individual measurements, including out-of-roundness (ovality) except for the following:

(1) Pipe and tube having a nominal wall thickness of 3% or less of the nominal outside diameter. The mean outside diameter shall conform to the permissible variations of Table 3 and individual measurements (including ovality) shall conform to the plus and minus values of the table, with the values increased by 0.5% of the nominal outside diameter.

(2) The mean outside diameter for pipe and tube over 4 1/2 in. (114 mm) in outside diameter with a nominal wall thickness greater than 3% of the nominal outside diameter shall conform to the permissible variations of this table, and individual measurements shall not exceed twice the permissible variations of the table.

[A] The wall thickness tolerances for hot-finished tubes includes eccentricity tolerance up to ±12.5%.

[B] For hot-finished tube 5 in. (127.0 mm) and under in outside diameter, the tolerances on the outside diameter apply for individual measurements and include ovality. For tubes over 5 in. in outside diameter, the mean outside diameter shall conform to the permissible variations of this table and individual measurements shall not exceed twice the permissible variations of this table.

must be examined for leaks. If any pipe or tube shows leaks during the hydrostatic test, it shall be rejected.

7.2.1.4 When so agreed upon between the manufacturer and the purchaser, pipe or tube may be tested to one and one-half times the allowable fiber stress given in 7.2.1.

7.2.2 When specified by the purchaser, a nondestructive electric test in accordance with Specification A 450/A 450M may be used instead of or in addition to the hydrostatic test.

8. Dimensions and Permissible Variations

8.1 *Diameter and Wall Thickness* — The permissible variations in the outside diameter and wall thickness of pipe and tube shall not exceed those prescribed in Table 3.

8.2 *Length* — When pipe or tube is ordered cut-to-length, the length shall not be less than that specified, but a variation of +1/8 in. (3.2 mm) will be permitted, except that for lengths over 30 ft (9.1 m), a variation of + 1/4 in. (6.4 mm) will be permitted.

8.3 *Straightness* — Material shall be reasonably straight and free of bends and kinks.

9. Workmanship, Finish, and Appearance

9.1 The material shall be uniform in quality and temper, smooth, commercially straight, and free of injurious imperfections.

10. Sampling

10.1 *Lot* — Definition:

10.1.1 A lot for chemical analysis shall consist of one heat.

10.1.2 A lot for mechanical properties testing shall consist of all material from the same heat, nominal size (excepting length), and condition (temper).

10.2 *Test Material Selection:*

10.2.1 *Chemical Analysis* — Representative samples shall be taken during pouring or subsequent processing from each lot.

10.2.1.1 *Product (Check) Analysis* shall be wholly the responsibility of the purchaser.

10.2.2 *Mechanical Properties* — Samples of the material to provide test specimens for mechanical properties shall be taken from such locations in each lot as to be representative of that lot.

11. Number of Tests

11.1 *Chemical Analysis* — One test per lot.

11.2 *Mechanical Properties* — One test per lot.

11.3 *Nondestructive Test* — Each piece in each lot.

12. Specimen Preparation

12.1 Tension test specimens shall be taken from material in the final condition (temper) and tested in the direction of fabrication.

12.2 Whenever possible, all pipe and tube shall be tested in full tubular size. When testing in full tubular size is not possible, longitudinal strip specimens, or the largest possible round specimen, shall be used. In the event of disagreement when full tubular testing is not possible, a longitudinal strip specimen with reduced gage length as in accordance with Test Methods E 8 shall be used.

13. Test Methods

13.1 Determine the chemical composition, mechanical, and other properties of the material as enumerated in this specification, in case of disagreement, in accordance with the following methods:

Test	ASTM Designation
Chemical analysis	E 354
Tension	E 8
Rounding procedure	E 29

13.2 For purposes of determining compliance with the specified limits for requirements of the properties listed in the following table, an observed value or a calculated value shall be rounded as indicated, in accordance with the rounding method of Practice E 29:

Test	Rounded Unit for Observed or Calculated Value
Chemical composition and tolerances (when expressed in decimals)	nearest unit in the last right-hand place of figures of the specified limit. If two choices are possible, as when the digits dropped are exactly a 5 or a 5 followed only by zeros, choose the one ending in an even digit with zero defined as an even digit.
Tensile strength and yield strength	nearest 1000 psi (6.9 MPa)
Elongation	nearest 1%

14. Inspection

14.1 Inspection of the material shall be made as agreed upon between the purchaser and the supplier as part of the purchase contract.

15. Rejection and Rehearing

15.1 Material that fails to conform to the requirements of this specification may be rejected. Rejection should be reported to the producer or supplier promptly and in writing. In case of dissatisfaction with the results of the test, the producer or supplier may make claim for a rehearing.

16. Certification

16.1 A producer's or supplier's certification shall be furnished to the purchaser that the material was manufactured, sampled, tested, and inspected in accordance with this specification and has been found to meet the requirements. A report of the test results shall be furnished.

17. Product Marking

17.1 The name or brand of the manufacturer, the trade name of the material or UNS number, the letters ASTM, the specification number, the heat number, finish, and nominal size shall be legibly stenciled on each piece ½ in. (12.7 mm) and over in outside diameter, provided the length is not under 3 ft (914 mm). The marking shall be by any method that will not result in harmful contamination.

17.1.1 For material less than ½ in. (12.7 mm) in outside diameter and material under 3 ft (914 mm) in length, the information specified in 17.1 shall be either stenciled or marked on a tag securely attached to the bundle or box in which the tube is shipped.

18. Packaging and Package Marking

18.1 Each bundle or shipping container shall be marked with the name or brand of the manufacturer; the trade name of the material or UNS number; the letters ASTM; the specification number; heat number; finish; condition (temper); and nominal size; gross, tare, and net weight; consignor and consignee address; contract or order number; or such other information as may be defined in the contract or order.

19. Keywords

19.1 seamless pipe; seamless tube; N08904; N08925; N08926

APPENDIX

(Nonmandatory Information)

XI. SCHEDULES OF COLD-WORKED SEAMLESS PIPE

X1.1 The schedules of cold-worked, seamless UNS N08904 pipe as given in Table X1.1 are regularly available. Other schedules may be furnished, and the manufacturer should be consulted. Table X1.1 is published for information only.

TABLE X1.1
PIPE SCHEDULES[A]

Nominal Pipe Size	Outside Diameter	Nominal Wall Thickness			
		Schedule No. 5	Schedule No. 10	Schedule No. 40	Schedule No. 80
¼	0.540	...	0.065	0.088	...
⅜	0.675	...	0.065	0.091	0.126
½	0.840	0.065	0.083	0.109	0.147
¾	1.050	0.065	0.083	0.113	0.154
1	1.315	0.065	0.109	0.133	0.179
1¼	1.660	0.065	0.109	0.140	0.191
1½	1.900	0.065	0.109	0.145	0.200
2	2.375	0.065	0.109	0.154	0.218
2½	2.875	0.083	0.120	0.203	0.276
3	3.500	0.083	0.120	0.216	0.300
3½	4.000	0.083	0.120	0.226	0.318
4	4.500	0.083	0.120	0.237	0.337
5	5.563	...	...	0.258	...
6	6.625	...	...	0.280	...
		Millimetres			
6.35	13.72	...	1.65	2.24	...
9.52	17.14	...	1.65	2.31	3.20
12.70	21.34	1.65	2.11	2.77	3.73
19.05	26.67	1.65	2.11	2.87	3.91
25.4	33.40	1.65	2.77	3.38	4.55
31.8	42.16	1.65	2.77	3.56	4.85
38.1	48.26	1.65	2.77	3.68	5.08
50.8	60.32	1.65	2.77	3.91	5.54
63.5	73.02	2.11	3.05	5.16	7.04
76.2	88.90	2.11	3.05	5.49	7.62
88.9	101.60	2.11	3.05	5.74	8.08
101.6	114.30	2.11	3.05	6.02	8.56
127.0	141.30	...	...	6.55	...
152.4	168.28	...	...	7.11	...

[A] The pipe schedules shown conform with standards adopted by the American National Standards Institute.

SPECIFICATION FOR CHROMIUM-NICKEL-MOLYBDENUM-IRON (UNS N08366 AND UNS N08367) PLATE, SHEET, AND STRIP

SB-688

(Identical with ASTM Specification B 688-95.)

1. Scope

1.1 This specification covers chromium-nickel-molybdenum-iron UNS N08366 and UNS N08367 plate, sheet, and strip for use in corrosive service and heat-resisting applications.

1.2 The values stated in inch-pound units are to be regarded as the standard. The values given in parentheses are for information only.

2. Referenced Documents

2.1 *ASTM Standards:*

E 8 Test Methods for Tension Testing of Metallic Materials

E 10 Test Method for Brinell Hardness of Metallic Materials

E 18 Test Methods for Rockwell Hardness and Rockwell Superficial Hardness of Metallic Materials

E 29 Practice for Using Significant Digits in Test Data to Determine Conformance with Specifications

E 38 Methods for Chemical Analysis of Nickel-Chromium and Nickel-Chromium-Iron Alloys

E 140 Standard Hardness Conversion Tables for Metals (Relationship Between Brinell Hardness, Vickers Hardness, Rockwell Hardness, Rockwell Superficial Hardness, and Knoop Hardness)

E 354 Test Methods for Chemical Analysis of High-Temperature, Electrical, Magnetic, and Other Similar Iron, Nickel, and Cobalt Alloys

3. Terminology

3.1 *Descriptions of Terms Specific to This Standard:*

3.1.1 *sheet* — material under $^3/_{16}$ in. (5 mm) in thickness and 24 in. (610 mm) and over in width.

3.1.2 *strip* — material under $^3/_{16}$ in. (5 mm) in thickness and under 24 in. (610 mm) in width.

3.1.3 *plate* — material $^3/_{16}$ in. (5 mm) and over in thickness and over 10 in. (254 mm) in width.

4. Ordering Information

4.1 Orders for material under this specification shall include the following information, as required:

4.1.1 Quantity (feet, metres, or number of pieces),

4.1.2 Alloy name or UNS number,

4.1.3 Finish (hot-rolled or cold-rolled),

4.1.4 Dimensions (thickness, width, and length if cut-length),

4.1.5 Certification, if required,

4.1.6 Purchaser's inspection, if required,

4.1.7 ASTM designation and year of issue, and

4.1.8 Samples for product analysis, if required.

5. Chemical Composition

5.1 The material shall conform to the composition limits specified in Table 1.

5.2 If a product (check) analysis is made by the purchaser, the material shall conform to the permissible variations for product (check) analysis in Table 1.

6. Mechanical Properties and Other Requirements

6.1 The material shall conform to the mechanical property requirements specified in Table 2.

TABLE 1
CHEMICAL REQUIREMENTS

Element	Composition Limits, % N08366	Composition Limits, % N08367	Product (Check) Analysis Variations, under min or over max, of the Specified Limit of Element, %
Carbon	0.035 max	0.030 max	0.005
Manganese	2.00 max	2.00 max	0.04
Silicon	1.00 max	1.00 max	0.05
Phosphorus	0.040 max	0.040 max	0.005
Sulfur	0.030 max	0.030 max	0.005
Chromium	20.00 to 22.00	20.00 to 22.00	0.25
Nickel	23.50 to 25.50	23.50 to 25.50	0.20
Molybdenum	6.00 to 7.00	6.00 to 7.00	0.15
Nitrogen	. . .	0.18 to 0.25	0.01
Iron[A]	Remainder	Remainder	
Copper	. . .	0.75 max	0.04

[A] Iron shall be determined arithmetically by difference.

TABLE 2
MECHANICAL PROPERTIES FOR PLATE, SHEET, AND STRIP

	N08366	N08367
Yield strength, 0.2% offset, min, ksi (MPa)		
Under 3/16 in. (4.8 mm) thick	35 (240)	46 (317)
3/16 to 3/4 in. (19 mm), incl	35 (240)	45 (310)
Over 3/4 in. thick	35 (240)	45 (310)
Tensile strength, min, ksi (MPa)		
Under 3/16 in. (4.8 mm) thick	75 (515)	104 (717)
3/16 to 3/4 in. (19 mm), incl	75 (515)	100 (690)
Over 3/4 in. thick	75 (515)	95 (655)
Elongation in 2 in. or 50 mm or 4*D*, min, %	30[A]	30[A]
Hardness,[B] max		
Under 3/16 in. (4.8 mm) thick	95 HRB	100 HRB
3/16 to 3/4 in. (19 mm), incl	212 HBN	240 HBN
Over 3/4 in. thick	212 HBN	233 HBN

[A] Not applicable for thickness under 0.015 in. (0.40 mm).
[B] Hardness values (Brinell, Rockwell, or equivalent) are informative only are not to be construed as the basis for acceptance or rejection.

7. Dimensions and Permissible Variations

7.1 *Sheet* — Material shall conform to the variations specified in Tables 3 to 9, inclusive. There will be no flatness requirements for non-stretcher leveled sheet.

7.2 *Strip* — Material shall conform to the variations specified in Tables 10 to 13, inclusive. Note that strip of all sizes may be ordered to cut lengths in which case a variation of 1/2 in. (13 mm) over the specified length shall

TABLE 3
PERMISSIBLE VARIATIONS IN THICKNESS FOR HOT-ROLLED SHEETS IN CUT LENGTHS, COLD-ROLLED SHEETS IN CUT LENGTHS AND COILS

Specified Thickness,[A] in. (mm)	Permissible Variations, Plus and Minus in.	Permissible Variations, Plus and Minus mm
Over 0.145 (3.68) to less than 3/16 (4.76)	0.014	0.36
Over 0.130 (3.30) to 0.145 (3.68), incl	0.012	0.30
Over 0.114 (2.90) to 0.130 (3.30), incl	0.010	0.25
Over 0.098 (2.49) to 0.114 (2.90), incl	0.009	0.23
Over 0.083 (2.11) to 0.098 (2.49), incl	0.008	0.20
Over 0.072 (1.83) to 0.083 (2.11), incl	0.007	0.18
Over 0.058 (1.47) to 0.072 (1.83), incl	0.006	0.15
Over 0.040 (1.02) to 0.058 (1.47), incl	0.005	0.13
Over 0.026 (0.66) to 0.040 (1.02), incl	0.004	0.10
Over 0.016 (0.41) to 0.026 (0.66), incl	0.003	0.08
Over 0.007 (0.18) to 0.016 (0.41), incl	0.002	0.05
Over 0.005 (0.13) to 0.007 (0.18), incl	0.0015	0.04
0.005 (0.13)	0.001	0.03

[A] Thickness measurements are taken at least 3/8 in. (9.52 mm) from the edge of the sheet.

TABLE 4
PERMISSIBLE VARIATIONS IN WIDTH AND LENGTH FOR HOT-ROLLED AND COLD-ROLLED RESQUARED SHEETS (STRETCHER LEVELED STANDARD OF FLATNESS)

Specified Dimensions, in. (mm)	Tolerances, Plus in.	Tolerances, Plus mm	Tolerances, Minus
For thickness under 0.131 (3.33):			
Widths up to 48 (1219) excl	1/16	2	0
Widths 48 (1219) and over	1/8	3	0
Lengths up to 120 (3048) excl	1/16	2	0
Lengths 120 (3048) and over	1/8	3	0
For thicknesess 0.131 (3.33) and over:			
All widths and lengths	1/4	6	0

TABLE 5
PERMISSIBLE VARIATIONS IN WIDTH FOR HOT-ROLLED AND COLD-ROLLED SHEETS NOT RESQUARED AND COLD-ROLLED COILS

Specified Thickness, in. (mm)	Tolerances for Specified Width, in. (mm) 24 (610) to 48 (1219), excl	Tolerances for Specified Width, in. (mm) 48 (1219) and Over
Less than 3/16 (4.76)	1/16 (2) plus 0 Minus	1/8 (3) plus 0 Minus

TABLE 6
PERMISSIBLE VARIATIONS IN CAMBER FOR HOT-ROLLED AND COLD-ROLLED SHEETS NOT REQUIRED AND COLD-ROLLED COILS[A]

Specified Width, in. (mm)	Tolerance per Unit Length of Any 8 ft (2438 mm), in. (mm)
24 (610) to 36 (914), incl	1/8 (3)
Over 36 (914)	1/16 (2)

[A] Camber is the greatest deviation of a side edge from a straight line and measurement is taken by placing an 8-ft (2438-mm) straightedge on the concave side and measuring the greatest distance between the sheet edge and the straightedge.

TABLE 7
PERMISSIBLE VARIATIONS IN LENGTH FOR HOT-ROLLED AND COLD-ROLLED SHEETS NOT RESQUARED

Length, ft (mm)	Tolerances, in. (mm)
Up to 10 (3048), incl	1/4 (6) plus 0 minus
Over 10 (3048) to 20 (6096), incl	1/2 (13) plus 0 minus

be permitted. There shall be no flatness requirements for non-stretcher leveled strip.

7.3 *Plate* — Material shall conform to the variations specified in Tables 14 to 20, inclusive. Specially flattened plate, when so specified, shall have permissible variations in flatness as agreed upon between the manufacturer and purchaser.

8. Workmanship, Finish, and Appearance

8.1 The material shall be uniform in quality and condition, smooth, commercially straight or flat, and free of injurious imperfections.

9. Sampling

9.1 *Lot for Chemical Analysis and Mechanical Testing:*

9.1.1 A lot for chemical analysis shall consist of one heat.

9.1.2 Lots for mechanical testing shall consist of the material from one heat, in the same condition, and of the same nominal thickness.

TABLE 8
PERMISSIBLE VARIATIONS IN FLATNESS FOR HOT-ROLLED AND COLD-ROLLED SHEETS SPECIFIED TO STRETCHER-LEVELED STANDARD OF FLATNESS

Specified Thickness, in. (mm)	Width, in. (mm)	Length, in. (mm)	Flatness Tolerance, in. (mm)
Under 3/16 (4.76)	to 48 (1219), incl	to 96 (2438), incl	1/8 (3)
Under 3/16 (4.76)	to 48 (1219), incl	over 96 (2438)	1/4 (6)
Under 3/16 (4.76)	over 48 (1219)	to 96 (2438), incl	1/4 (6)
Under 3/16 (4.76)	over 48 (1219)	over 96 (2438)	1/4 (6)

TABLE 9
PERMISSIBLE VARIATIONS IN DIAMETER FOR HOT-ROLLED AND COLD-ROLLED SHEETS, SHEARED CIRCLES

Specified Thickness, in. (mm)	Tolerance Over Specified Diameter (No Tolerance Under), in. (mm)		
	Diameters Under 30 in. (762)	Diameters 30 (762) to 48 in. (1219)	Diameters Over 48 in. (1219)
0.0972 (2.46) and thicker	1/8 (3)	3/16 (5)	1/4 (6)
0.0971 (2.46) to 0.0568 (1.45), incl	3/32 (2)	5/32 (4)	7/32 (6)
0.0567 (1.45) and thinner	1/16 (2)	1/8 (3)	3/16 (5)

TABLE 10
PERMISSIBLE VARIATIONS IN THICKNESS FOR COLD-ROLLED STRIP IN COILS AND CUT LENGTHS

Specified Thickness, in. (mm)	Thickness Tolerances, for the Thickness and Widths Given, Plus and Minus, in. (mm)		
	Width, in. (mm)		
	3/16 (4.76) to 6 (152), incl	Over 6 (152) to 12 (305), incl	Over 12 (305) to 24 (610), excl
	Tickness Tolerances[A]		
0.005 (0.13) to 0.010 (0.25), incl	10%	10%	10%
Over 0.010 (0.25) to 0.011 (0.28), incl	0.0015 (0.04)	0.0015 (0.04)	0.0015 (0.04)
Over 0.011 (0.28) to 0.013 (0.33), incl	0.0015 (0.04)	0.0015 (0.04)	0.002 (0.05)
Over 0.013 (0.33) to 0.017 (0.43), incl	0.0015 (0.04)	0.002 (0.05)	0.002 (0.05)
Over 0.017 (0.43) to 0.020 (0.51), incl	0.0015 (0.04)	0.002 (0.05)	0.0025 (0.06)
Over 0.020 (0.51) to 0.029 (0.74), incl	0.002 (0.05)	0.0025 (0.06)	0.0025 (0.06)
Over 0.029 (0.74) to 0.035 (0.89), incl	0.002 (0.05)	0.003 (0.08)	0.003 (0.08)
Over 0.035 (0.89) to 0.050 (1.27), incl	0.0025 (0.06)	0.0035 (0.09)	0.0035 (0.09)
Over 0.050 (1.27) to 0.069 (1.75), incl	0.003 (0.08)	0.0035 (0.09)	0.0035 (0.09)
Over 0.069 (1.75) to 0.100 (2.54), incl	0.003 (0.08)	0.004 (0.10)	0.005 (0.13)
Over 0.100 (2.54) to 0.125 (2.98), incl	0.004 (0.10)	0.0045 (0.11)	0.005 (0.13)
Over 0.125 (2.98) to 0.161 (4.09), incl	0.0045 (0.11)	0.0045 (0.11)	0.005 (0.13)
Over 0.161 (4.09) to under 3/16 (4.76)	0.005 (0.13)	0.005 (0.13)	0.006 (0.15)

NOTE 1 — Thickness measurements are taken at least 3/8 in. (9.52 mm) in from the edge of the strip, except that on widths less than 1 in. (25.4 mm), the tolerances are applicable for measurements at all locations.

NOTE 2 — The tolerances in this table include crown tolerances

[A] Thickness tolerances given in in. (mm) unless otherwise indicated.

TABLE 11
PERMISSIBLE VARIATIONS IN WIDTH FOR COLD-ROLLED STRIP IN COILS AND CUT LENGTHS FOR EDGE NOS. 1 AND 5

Specified Edge No.	Width, in. (mm)	Thickness, in. (mm)	Width Tolerance for Thickness and Width Given, in. (mm)	
			Plus	Minus
1 and 5	3/32 (7.14) and under	1/16 (1.59) and under	0.005 (0.13)	0.005 (0.13)
1 and 5	Over 3/32 (7.14) to 3/4† (19.05), incl	3/32 (2.38) and under	0.005 (0.13)	0.005 (0.13)
1 and 5	over 3/4 (19.05) to 5 (127), incl	1/8 (3.18) and under	0.005 (0.13)	0.005 (0.13)
5	over 5 (127.00) to 9 (228.60), incl	1/8 (3.18) to 0.008 (0.20), incl	0.010 (0.25)	0.010 (0.25)
5	over 9 (228.60) to 20 (508.00), incl	0.105 (2.67) to 0.015 (0.38)	0.010 (0.25)	0.010 (0.25)
5	over 20 (508.00)	0.080 (2.03) to 0.023 (0.58)	0.015 (0.38)	0.015 (0.38)

† Editorially corrected.

9.2 *Test Material Selection:*

9.2.1 *Chemical Analysis:*

9.2.1.1 An analysis of each lot shall be made by the manufacturer from a representative sample obtained during the pouring of the heat or subsequent processing.

9.2.1.2 If samples for product (check) analysis are specified, a representative sample shall be taken from each lot (see 9.1.1) of finished material.

9.2.2 *Sampling for Mechanical Properties* — Samples of the material to provide test specimens for mechanical testing shall be taken from such locations in each lot (see 9.1.2) as to be representative of that lot.

10. Number of Tests

10.1 *Chemical Analysis* — One test per lot.

10.2 *Mechanical Tests* — One test per lot.

10.3 *Retests* — If the specimen used in the mechanical test of any lot fails to meet the specified requirements, two additional specimens shall be taken from different

TABLE 12
PERMISSIBLE VARIATIONS IN WIDTH FOR COLD-ROLLED STRIP IN COILS AND CUT LENGTHS FOR EDGE NO. 3

	Width Tolerance, Plus and Minus for Thickness and Width Given, in. (mm)					
Specified Thickness, in. (mm)	Under ½ (12.70) to 3/16 (4.76), incl	½ (12.70) to 6 (152.40), incl	Over 6 (152.40) to 9 (228.60), incl	Over 9 (228.60) to 12 (304.80), incl	Over 12 (304.80) to 20 (508.00), incl	Over 20 (508.00) to 24 (609.60), incl
Under 3/16 (4.76) to 0.161 (4.09), incl	...	0.016 (0.41)	0.020 (0.51)	0.020 (0.51)	0.031 (0.79)	0.031 (0.79)
0.160 (4.06) to 0.100 (2.54), incl	0.010 (0.25)	0.010 (0.25)	0.016 (0.41)	0.016 (0.41)	0.020 (0.51)	0.020 (0.51)
0.099 (2.51) to 0.069 (1.75), incl	0.008 (0.20)	0.008 (0.20)	0.010 (0.25)	0.010 (0.25)	0.016 (0.41)	0.020 (0.51)
0.068 (1.73) and under	0.005 (0.13)	0.005 (0.13)	0.005 (0.13)	0.010 (0.25)	0.016 (0.41)	0.020 (0.51)

TABLE 13
PERMISSIBLE VARIATIONS IN CAMBER FOR COLD-ROLLED STRIP IN COILS AND CUT LENGTHS[A]

Specified Width, in. (mm)	Tolerance per Unit Length of Any 8 ft (2438 mm), in. (mm)
To 1½ (38.10), incl	½ (13)
Over 1½ (38.10) to 24 (609.60), excl	¼ (6)

[A] Camber is the deviation of a side edge from a straight line and measurement is taken by placing an 8-ft (2438-mm) straightedge on the concave side and measuring the greatest distance between the strip edge and the straightedge.

TABLE 14
PERMISSIBLE VARIATIONS IN THICKNESS FOR PLATES[A, B]

	Width, in. (mm)			
Specified Thickness, in. (mm)	To 84 (2134), incl	Over 84 (2134) to 120 (3048), incl	Over 120 (3048) to 144 (3658), incl	Over 144 (3658)
	Tolerance Over Specified Thickness,[C] in. (mm)			
3/16 (4.76) to 3/8 (9.52), excl	0.045 (1.14)	0.050 (1.27)	...	...
3/8 (9.52) to ¾ (19.05), excl	0.055 (1.40)	0.060 (1.52)	0.075 (1.90)	0.090 (2.29)
¾ (19.05) to 1 (25.40), excl	0.060 (1.52)	0.065 (1.65)	0.085 (2.16)	0.100 (2.54)

[A] Thickness is measured along the longitudinal edges of the plate at least 3/8 in. (9.52 mm), but not more than 3 in. (76.20 mm), from the edge.

[B] The tolerance under specified thickness is 0.01 in. (0.25 mm).

[C] For circles, the over thickness tolerances in this table apply to the diameter of the circle corresponding to the width ranges shown. For plates of irregular shape, the over thickness tolerances apply to the greatest width corresponding to the width ranges shown.

sample pieces and tested. The results of the tests on both of these specimens shall meet the specified requirements.

11. Specimen Preparation

11.1 Tension test specimens shall be taken from material in the final condition and tested transverse to the direction of rolling when width permits.

11.2 Tension test specimens shall be any of the standard or sub-size specimens shown in Test Methods E 8. The largest possible size specimen of Test Methods E 8 shall be used.

11.3 In the event of disagreement, referee specimens shall be as follows:

TABLE 15
PERMISSIBLE VARIATIONS IN WIDTH AND LENGTH FOR RECTANGULAR SHEARED MILL PLATES AND UNIVERSAL MILL PLATES

		Tolerances Over Specified Width and Length for Given Width, Length, and Thickness,[A] in. (mm)					
		Under 3/8 in. (9.52 mm) in Thickness		3/8 (9.52) to 1/2 (12.70 mm) in., incl, in Thickness		Over 1/2 (12.70 mm) to 1 in. (25.40 mm) in Thickness	
Width, in. (mm)	Length, in. (mm)	Width	Length	Width	Length	Width	Length
48 (1219) and under	144 (3658) and under	1/8 (3)	3/16 (5)	3/16 (5)	1/4 (6)	5/16 (8)	3/8 (10)
Over 48 (1219) to 60 (1524), incl		3/16 (5)	1/4 (6)	1/4 (6)	5/16 (8)	3/8 (10)	7/16 (11)
Over 60 (1524) to 84 (2134), incl		1/4 (6)	5/16 (8)	5/16 (8)	3/8 (10)	7/16 (11)	1/2 (13)
Over 84 (2134) to 108 (2743), incl		5/16 (8)	3/8 (10)	3/8 (10)	7/16 (11)	1/2 (13)	9/16 (14)
Over 108 (2743)		3/8 (10)	7/16 (11)	7/16 (11)	1/2 (13)	5/8 (16)	11/16 (17)
48 (1219) and under	over 144 (3658) to 240 (6096)	3/16 (5)	3/8 (10)	1/4 (6)	1/2 (13)	5/16 (8)	5/8 (16)
Over 48 (1219) to 60 (1524), incl		1/4 (6)	7/16 (11)	5/16 (8)	5/8 (16)	3/8 (10)	3/4 (19)
Over 60 (1524) to 84 (2134), incl		3/8 (10)	1/2 (13)	7/16 (11)	11/16 (17)	1/2 (13)	3/4 (19)
Over 84 (2134) to 108 (2743), incl		7/16 (11)	9/16 (14)	1/2 (13)	3/4 (19)	5/8 (16)	7/8 (22)
Over 108 (2743)		1/2 (13)	5/8 (16)	5/8 (16)	7/8 (22)	11/16 (17)	1 (25)
48 (1219) and under	over 240 (6096) to 360 (9144)	1/4 (6)	1/2 (13)	5/16 (8)	5/8 (16)	3/8 (10)	3/4 (19)
Over 48 (1219) to 60 (1524), incl		5/16 (8)	5/8 (16)	3/8 (10)	3/4 (19)	1/2 (13)	3/4 (19)
Over 60 (1524) to 84 (2134), incl		7/16 (11)	11/16 (17)	1/2 (13)	3/4 (19)	5/8 (16)	7/8 (22)
Over 84 (2134) to 108 (2743), incl		9/16 (14)	3/4 (19)	5/8 (16)	7/8 (22)	3/4 (19)	1 (25)
Over 108 (2743)		5/8 (16)	7/8 (22)	11/16 (17)	1 (25)	7/8 (22)	1 (25)
60 (1524) and under	over 360 (9144) to 480 (12192)	7/16 (11)	1 1/8 (29)	1/2 (13)	1 1/4 (32)	5/8 (16)	1 3/8 (35)
Over 60 (1524) to 84 (2134), incl		1/2 (13)	1 1/4 (32)	5/8 (16)	1 3/8 (35)	3/4 (19)	1 1/2 (38)
Over 84 (2134) to 108 (2743), incl		9/16 (14)	1 1/4 (32)	3/4 (19)	1 3/8 (35)	7/8 (22)	1 1/2 (38)
Over 108 (2743)		3/4 (19)	1 3/8 (35)	5/8 (22)	1 1/2 (38)	1 (25)	1 5/8 (41)
60 (1524) and under	over 480 (12192) to 600 (15240)	7/16 (11)	1 1/4 (32)	1/2 (13)	1 1/2 (38)	5/8 (16)	1 5/8 (41)
Over 60 (1524) to 84 (2134), incl		1/2 (13)	1 3/8 (35)	5/8 (16)	1 1/2 (38)	3/4 (19)	1 5/8 (41)
Over 84 (2134) to 108 (2743), incl		5/8 (16)	1 3/8 (35)	3/4 (19)	1 1/2 (38)	7/8 (22)	1 5/8 (41)
Over 108 (2743)		3/4 (19)	1 1/2 (38)	7/8 (22)	1 5/8 (41)	1 (25)	1 3/4 (44)
60 (1524) and under	over 600 (15240)	1/2 (13)	1 3/4 (44)	5/8 (16)	1 7/8 (48)	3/4 (19)	1 7/8 (48)
Over 60 (1524) to 84 (2134), incl		5/8 (16)	1 3/4 (44)	3/4 (19)	1 7/8 (48)	7/8 (22)	1 7/8 (48)
Over 84 (2134) to 108 (2743), incl		5/8 (16)	1 3/4 (44)	3/4 (19)	1 7/8 (48)	7/8 (22)	1 7/8 (48)
Over 108 (2743)		7/8 (22)	1 3/4 (44)	1 (25)	2 (51)	1 1/8 (29)	2 1/4 (57)

[A] The tolerance under specified width and length is 1/4 in. (6.35 mm).

11.3.1 Full thickness of the material machined to the form and dimensions shown for the sheet-type specimen in Test Methods E 8 for material under 1/2 in. (13 mm) in thickness.

11.3.2 The largest possible round specimen shown in Test Methods E 8 for material 1/2 in. (13 mm) and over in thickness.

12. Test Methods

12.1 Determine the chemical composition and mechanical properties of the material, as enumerated in this specification, in the case of disagreement, in accordance with the following ASTM methods:

12.1.1 *Chemical Analysis* — Methods E 38 and Test Methods E 354.

12.1.1.1 Methods E 38 shall be used only for elements not covered by Test Methods E 354.

12.2 *Tension Test* — Test Methods E 8.

12.3 *Hardness Test* — Test Method E 10 or Test Methods E 18, as applicable.

12.4 *Hardness Conversion* — Hardness Conversion Tables E 140.

12.5 *Determination of Significant Places* — For purposes of determining compliance with the specified limits for the requirements of the properties listed in the following table, round an observed or a calculated value as

TABLE 16
PERMISSIBLE VARIATIONS IN ANNEALED PLATES

Specified Thickness, in. (mm)	Flatness Tolerance (Deviation from a Horizontal Flat Surface) for Thicknesses and Widths Given, in. (mm)								
	Width, in. (mm)								
	48 (1219) or Under	Over 48 (1219) to 60 (1524), excl	60 (1524) to 72 (1829), excl	72 (1829) to 84 (2134), excl	84 (2134) to 96 (2438), excl	96 (2438) to 108 (2743), excl	108 (2743) to 120 (3048), excl	120 (3048) to 144 (3658), excl	144 (3658) and Over
3/16 (4.76) to 1/4 (6.35), excl	3/4 (19)	1 1/16 (27)	1 1/4 (32)	1 3/8 (35)	1 5/8 (41)	1 5/8 (41)	1 7/8 (48)	2 (51)	...
1/4 (6.35) to 3/8 (9.52), excl	11/16 (17)	3/4 (19)	15/16 (24)	1 1/8 (29)	1 3/8 (35)	1 7/16 (37)	1 9/16 (40)	1 7/8 (48)	...
3/8 (9.52) to 1/2 (12.70), excl	1/2 (13)	9/16 (14)	11/16 (17)	3/4 (19)	15/16 (24)	1 1/8 (29)	1 1/4 (32)	1 7/16 (37)	1 3/4 (44)
1/2 (12.70) to 3/4 (19.05), excl	1/2 (13)	9/16 (14)	5/8 (16)	5/8 (16)	13/16 (21)	1 1/8 (29)	1 1/8 (29)	1 1/8 (29)	1 3/8 (35)
3/4 (19.05) to 1 (25.40), excl	1/2 (13)	9/16 (14)	5/8 (16)	5/8 (16)	3/4 (19)	13/16 (21)	15/16 (24)	1 (25)	1 1/8 (29)

NOTE 1 — Tolerances in this table apply to plates up to 15 ft (4572 mm) in length, or to any 15 ft (4572 mm) of longer plates.
NOTE 2 — If the longer dimension is under 36 in. (914 mm), the width tolerance is not greater than 1/4 in. (6.35 mm).

TABLE 17
PERMISSIBLE VARIATIONS IN CAMBER FOR SHEARED MILL AND UNIVERSAL MILL PLATES[A]

Maximum camber	−1/8 in. in any 5 ft −3 mm in any 1.524 m

[A] Camber is the deviation of a side edge from a straight line, and measurement is taken by placing a 5-ft straightedge on the concave side and measuring the greatest distance between the plate and the straightedge.

TABLE 18
PERMISSIBLE VARIATIONS IN DIAMETER FOR CIRCULAR PLATES

Specified Diameter, in. (mm)	Tolerance Over Specified Diameter for Given Diameter and Thickness,[A] in. (mm)		
	To 3/8 (9.52) in., excl, in Thickness	3/8 (9.52) to 5/8 (15.88) in., excl, in Thickness	5/8 in. (15.88) to 1 (25.4) in Thickness[B]
To 60 (1524), excl	1/4 (6)	3/8 (10)	1/2 (13)
60 (1524 mm) to 84 (2134 mm), excl	5/16 (8)	7/16 (11)	9/16 (14)
84 (2134 mm) to 108 (2743 mm), excl	3/8 (10)	1/2 (13)	5/8 (16)
108 (2743 mm) to 180 (4572 mm), excl	7/16 (11)	9/16 (14)	11/16 (17)

[A] No tolerance under.
[B] Circular and sketch plates over 5/8 in. (15.88 mm) in thickness are not commonly sheared but are machined or flames cut.

TABLE 19
RECOMMENDED FLAME CUTTING ALLOWANCES TO CLEAN UP IN MACHINING PLATES, CIRCLES, RINGS, AND SKETCHES[A]

Specified Thickness, in. (mm)	Machining Allowance per Edge, in. (mm)
1 (25.4) and under	1/4 (6)

[A] Supplier assumes the appropriate clean-up allowances have been included in ordered dimension.

TABLE 20
PERMISSIBLE VARIATIONS IN ABRASIVE CUTTING WIDTH AND LENGTH FOR PLATES

Specified Thickness, in. (mm)	Tolerance Over Specified Width and Length[A]	
	Width	Length
Up to 1 (25.4), incl	1/8 (3)	1/8 (3)

[A] The tolerance under specified width and length is 1/8 in. (3.18 mm).

indicated, in accordance with the rounding methods of Practice E 29.

Requirements	Rounded Unit for Observed or Calculated Value
Chemical composition	Nearest unit in the last right-hand place of figures of the specified limit
Tensile strength and yield strength	Nearest 1000 psi (7 MPa)
Elongation	Nearest 1%
Brinell hardness	Tabular value[A]
Rockwell hardness	1 Rockwell number

[A] Round the mean diameter of the Brinell impression to the nearest 0.05 mm and report the corresponding hardness number read from the table without further rounding.

13. Inspection

13.1 Inspection of the material shall be agreed upon between the purchaser and the supplier as part of the purchase contract.

14. Rejection and Rehearing

14.1 Material that fails to conform to the requirements of this specification may be rejected. Rejection should be reported to the producer or supplier promptly and in writing. In case of dissatisfaction with the results of the test, the producer or supplier may make claim for a rehearing.

15. Certification

15.1 Upon request of the purchaser in the contract or purchase order, a manufacturer's certification that the material was manufactured and tested in accordance with this specification together with a report of the test results shall be furnished at the time of the shipment.

16. Product Marking

16.1 Each bundle or shipping container shall be marked with the name of the material, heat number, condition (temper), the specification number, the size, gross, tare and net weights, consignor and consignee address, contract or order number, or such other information as may be defined in the contract or purchase order.

16.2 When agreed upon between purchaser and manufacturer, material shall be marked individually with the name of the material, heat number, condition (temper), the specification number, size, and producer's name or mark.

17. Keywords

17.1 iron-nickel-chromium-molybdenum; plate; sheet; strip; UNS N08366; UNS N08367

SPECIFICATION FOR IRON-NICKEL-CHROMIUM-MOLYBDENUM ALLOYS (UNS N08366 AND UNS N08367) SEAMLESS PIPE AND TUBE

SB-690

(Identical with ASTM Specification B 690-93.)

1. Scope

1.1 This specification covers iron-nickel-chromium-molybdenum alloys (UNS N08366 and UNS N08367) cold-finished annealed or hot-finished annealed seamless pipe and tube intended for use in special corrosive service and for heat-resisting applications.

1.2 Pipe and tube shall be supplied in the solution heat treated and descaled condition. When bright annealing is used, descaling is not necessary.

1.3 The values stated in inch-pound units are to be regarded as the standard. The values given in parentheses are for information only.

1.4 The following safety hazards caveat pertains only to the test method portion, Section 12, of this specification. *This standard does not purport to address all of the safety problems, if any, associated with its use. It is the responsibility of the user of this standard to establish appropriate safety and health practices and determine the applicability of regulatory limitations prior to use.*

2. Referenced Documents

2.1 *ASTM Standards:*

A 450/A 450M Specification for General Requirements for Carbon, Ferritic Alloy, and Austenitic Alloy Steel Tubes

E 8 Test Methods of Tension Testing of Metallic Materials

E 29 Practice for Using Significant Digits in Test Data to Determine Conformance with Specifications

E 38 Methods for Chemical Analysis of Nickel-Chromium and Nickel-Chromium-Iron Alloys

E 354 Test Methods for Chemical Analysis of High Temperature, Electrical, Magnetic, and Other Similar Iron, Nickel, and Cobalt Alloys

3. Terminology

3.1 *Descriptions of Terms Specific to This Standard:*

3.1.1 *average diameter* — average of the maximum and minimum outside diameters, or the maximum and minimum inside diameters, as determined at any cross section of the tube.

3.1.2 *pipe* — seamless tube conforming to the particular dimensions commercially known as standard pipe (Appendix X1).

3.1.3 *tube* — hollow product of round or any other cross section having a continuous periphery.

4. Ordering Information

4.1 Orders for material under this specification shall include the following information, as required:

4.1.1 Quantity (feet, metres, or number of lengths),

4.1.2 Form (seamless tube or pipe),

4.1.3 Name of material or UNS number,

4.1.4 Finish,

4.1.5 Dimensions:

4.1.5.1 *Tube* — Outside diameter, minimum wall thickness,

4.1.5.2 *Pipe* — Standard pipe size and schedule (Appendix 1),

4.1.5.3 *Length* — Specified or random,

TABLE 1
CHEMICAL REQUIREMENTS

Element	Composition Limits, % N08366	Composition Limits, % N08367	Product (Check) Analysis Variations, under min or over max, of the Specified Limit of Element, %
Carbon	0.035 max	0.030 max	0.005
Manganese	2.00 max	2.00 max	0.04
Silicon	1.00 max	1.00 max	0.05
Phosphorus	0.040 max	0.040 max	0.005
Sulfur	0.030 max	0.030 max	0.005
Chromium	20.00 to 22.00	20.00 to 22.00	0.25
Nickel	23.50 to 25.50	23.50 to 25.50	0.20
Molybdenum	6.00 to 7.00	6.00 to 7.00	0.15
Nitrogen	...	0.18 to 0.25	0.01
Iron[A]	remainder	remainder	
Copper		0.75 max	0.04

[A] Iron shall be determined arithmetically by difference.

4.1.6 Certification, if required (Section 15),

4.1.7 Purchaser's inspection, if required, (Section 13),

4.1.8 ASTM designation and year of issue, and

4.1.9 Samples for product analysis, if required.

5. Chemical Composition

5.1 The material shall conform to the composition limits specified in Table 1.

5.2 If a product (check) analysis is made by the purchaser, the material shall conform to the permissible variations for product (check) analysis in Table 1.

6. Mechanical and Other Properties

6.1 The material shall conform to the mechanical property requirements specified in Table 2.

6.2 *Hydrostatic Test:*

6.2.1 Each pipe or tube with an outside diameter $\frac{1}{8}$ in. (3.2 mm) and larger, or tubes with a wall thickness of 0.015 in. (0.38 mm) and over, shall be tested by the manufacturer to an internal hydrostatic pressure of 1000 psi (68.9 kPa) provided that the fiber stress calculated in accordance with the following equation does not exceed the allowable fiber stress, S, indicated below:

$$S = (PD/2t)$$

TABLE 2
MECHANICAL PROPERTIES OF PIPE AND TUBE

	Cold-Worked Annealed N08366	Hot-Worked Annealed N08366	Cold-Worked or Hot-Worked Annealed N08367
Tensile strength, min, ksi (MPa)	75 (517)	75 (517)	104 (717)
Yield strength, 0.2% offset, min, ksi (MPa)	30 (206)	30 (206)	46 (317)
Elongation in 2 in. or 50 mm, or 4D, min, %	30	30	30

where:

S = allowable fiber stress for material in cold-drawn condition, ($\frac{1}{4}$ × UTS.) 16 700 psi (1150 kPa),
P = hydrostatic test pressure, psi (or kPa),
D = outside diameter of the tube or pipe, in. (or mm), and
t = minimum wall thickness, in. (or mm), equal to the specified wall thickness minus the permissible "minus" wall tolerance, Table 3, or the specified minimum wall thickness.

6.2.2 Any pipe or tube showing leaks during hydrostatic test shall be rejected.

6.2.3 When so agreed upon between the purchaser and manufacturer at the time of the purchase order, pipe or tube may be treated to $1\frac{1}{2}$ times the allowable fiber stress of S in 6.2.1.

6.2.4 When specified by the purchaser, a nondestructive electric test in accordance with Specification A 450/A 450M may be used in place of or in addition to, the hydrostatic test.

7. Dimensions and Permissible Variations

7.1 *Outside Diameter and Wall Thickness:*

7.1.1 The permissible variations in the outside diameter and wall thickness of pipe and tube shall not exceed those specified in Tables 3, 4, and 5.

7.1.2 Permissible variations given in Tables 3, 4, and 5 are applicable to only two dimensions.

7.2 *Length* — When pipe or tube is ordered cut-to-length, the permissible variations in length shall be those specified in Table 6 for tubes; the permissible variation in length for pipe shall be plus $\frac{1}{4}$ in. (6.4 mm), minus 0 in.

7.3 *Straightness* — Material shall be reasonably straight and free of bends and kinks.

TABLE 3
PERMISSIBLE VARIATIONS IN OUTSIDE DIAMETER[A] TUBE

Outside Diameter, in. (mm)	Permissible Variations, in. (mm) Plus	Minus
Hot-Finished Seamless Tubes		
4 (101.6) and under	1/64 (0.4)	1/32 (0.8)
Over 4 (101.6) to 7 1/2 (190.5) incl	1/64 (0.4)	3/64 (1.2)
Over 7 1/2 (190.5) to 9 (228.6) incl	1/64 (0.4)	1/16 (1.6)
Cold-Finished Seamless Tubes		
Under 2 1/2 (63.5)	0.010 (0.25)	0.010 (0.25)
2 1/2 (63.5) to 3 (76.2), excl	0.012 (0.30)	0.012 (0.30)
3 (76.2) to 4 (101.6), incl	0.015 (0.38)	0.015 (0.38)
Over 4 (101.6) to 7 1/2 (190.5), incl	0.015 (0.38)	0.025 (0.64)
Over 7 1/2 (190.5) to 9 (228.6), incl	0.015 (0.38)	0.045 (1.14)

[A] These permissible variations include out-of-roundness. These permissible variations in outside diameter apply to hot-finished seamless, and cold-drawn seamless tubes before other fabricating operations such as upsetting, swaging, expanding, bending, or polishing.

TABLE 4
PERMISSIBLE VARIATIONS IN OUTSIDE DIAMETER, PIPE

Nominal Pipe Size in. (mm)	Permissible Variations in Outside Diameter Plus in.	Plus mm	Minus in.	Minus mm
1/8 (3.2) to 1 1/2 (38.1) incl	1/64	0.4	1/32	0.8
Over 1 1/2 (38.1) to 4 (101.6) incl	1/32	0.8	1/32	0.8
Over 4 (101.6) to 8 (203.2) incl	1/16	1.6	1/32	0.8
Over 8 (203.2) to 18 (457.2) incl	3/32	2.4	1/32	0.8
Over 18 (457.2) to 26 (660.4) incl	1/8	3.2	1/32	0.8
Over 26 (660.4) to 34 (863.6) incl	5/32	4.0	1/32	0.8
Over 34 (863.6) to 48 (1219.2) incl	3/16	4.8	1/32	0.8

8. Workmanship, Finish, and Appearance

8.1 The material shall be uniform in quality and condition, smooth, commercially straight or flat, and free of injurious imperfections.

9. Sampling

9.1 *Lot Definition:*

9.1.1 A lot for chemical analysis shall consist of one heat.

9.1.2 Lots for mechanical testing and check analysis shall consist of the material from one heat, in the same condition (temper), and of the same specified size (excepting length) and cross section.

9.2 *Test Material Selection:*

9.2.1 *Sampling for Chemical Analysis:*

9.2.1.1 An analysis of each lot shall be made by the manufacturer from a representative sample obtained during the pouring of the heat or subsequent processing.

9.2.1.2 If samples for product (check) analysis are specified, a representative sample shall be taken from each lot (see 9.1.2) of finished material.

9.2.2 *Sampling for Mechanical Testing* — Samples of the material to provide test specimens for mechanical testing shall be taken from such locations in each lot (see 9.1.2) as to be representative of that lot.

10. Number of Tests and Retests

10.1 *Chemical Analysis* — One test per lot.

10.2 *Mechanical Tests — Tension tests* — One test per lot.

10.3 *Nondestructive Test* — Each piece in each lot (9.1.2).

10.4 *Retests* — If the specimen used in the mechanical test of any lot fails to meet the specified requirements, an additional specimen shall be taken from a different sample piece and tested. The results of this test specimen shall meet the specified requirements.

11. Specimen Preparation

11.1 Tension test specimens shall be taken from the material after final heat treatment and tested in the direction of fabrication

11.2 Whenever possible, all pipe and tube shall be tested in full tubular size. When testing in full tubular size is not possible, longitudinal strip specimens, or largest possible round specimen prepared in accordance with Test Methods E 8, shall be used.

12. Test Methods

12.1 Determine the chemical composition and mechanical properties of the material, as enumerated in this specification, in the case of disagreement, in accordance with the following ASTM methods:

12.1.1 *Chemical Analysis* — Methods E 38 and Test Methods E 354.

TABLE 5
PERMISSIBLE VARIATIONS IN WALL THICKNESS[A] — TUBE

	Wall Thickness, %							
	0.095 (2.7) in. (mm) and Under		Over 0.095 (2.7) to 0.150 (3.8) in. (mm), incl		Over 0.150 (3.8) to 0.180 (4.6) in. (mm), incl		Over 0.180 (4.6) in. (mm)	
Outside diameter, in. (mm)	Plus	Minus	Plus	Minus	Plus	Minus	Plus	Minus
Seamless, Hot-Finished Tubes								
4 (101.6) and under	40	0	35	0	33	0	28	0
Over 4 (101.6)	...	...	35	0	33	0	28	0
Seamless, Cold-Finished Tubes								
			Plus			Minus		
1½ (38.1) and under			20			0		
Over 1½ (38.1)			22			0		

[A] These permissible variations in wall thickness apply only to tubes, except internal-upset tubes, as rolled or drawn, and before swaging, expanding, bending, polishing, or other fabricating operations.

TABLE 6
PERMISSIBLE VARIATIONS IN LENGTH[A] — TUBE

Method of Manufacture	Outside Diameter, in. (mm)	Cut Length, in. (mm)	
		Plus	Minus
Seamless, hot-finished	all sizes	3/16 (4.8)	0
Seamless, cold-finished	under 2 (50.8)	1/8 (3.2)	0
	2 (50.8) and over	3/16 (4.8)	0

[A] These permissible variations in length apply to tubes before bending. They apply to cut lengths up to and including 24 ft (7.3 m). For lengths over 24 ft (7.3 m) an additional over-tolerance of 1/8 in. (3.2 mm) for each 10 ft (3.0 m) or fraction thereof shall be permissible up to a maximum of ½ in. (12.7 mm).

12.1.1.1 Methods E 38 is to be used only for elements not covered by Test Methods E 354.

12.2 *Tension Test* — Test Methods E 8.

12.3 *Determination of Significant Places* — For purposes of determining compliance with the specified limits for the requirements of the properties listed in the following table, round an observed or a calculated value as indicated, in accordance with the rounding methods of Practice E 29.

Requirement	Rounded Unit for Observed or Calculated Value
Chemical composition	nearest unit in the last righthand place of figures of the specified limit
Tensile strength	nearest 1000 psi (7 MPa)
Yield strength	
Elongation	nearest 1%

13. Inspection

13.1 Inspection of the material shall be made as agreed upon between the manufacturer and the purchaser as part of the purchase contract.

14. Rejection and Rehearing

14.1 Material that fails to conform to the requirements of this specification may be rejected. Rejection should be reported to the producer or supplier promptly and in writing. In case of dissatisfaction with the results of the test, the producer or supplier may make claim for a rehearing.

15. Certification

15.1 When specified in the purchase order or contract, a producer's or supplier's certification shall be furnished to the purchaser that the material was manufactured, sampled, tested, and inspected in accordance with this specification and has been found to meet the requirements. When specified in the purchase order or contract, a report of the rest results shall be furnished.

16. Product Marking

16.1 *Material* — The name or brand of the manufacturer, the trade name of the material or UNS number, the letters ASTM, the specification number, heat number, and nominal size shall be legibly stenciled on each piece ½ in. (12.7 mm) and over in outside diameter, provided the length is not under 3 ft (914 mm). The material

marking shall be any method which will not result in harmful contamination.

16.1.1 For material less than ½ in. (12.7 mm) in outside diameter and material under 3 ft (914 mm) in length, the information specified in 16.1 shall be either stenciled or marked on a tag securely attached to the bundle or box in which the tube is shipped.

16.2 *Packaging* — Each bundle or shipping container shall be marked with the name or brand of the manufacturer, the trade name of the material or UNS number, the letters ASTM, the specification number, heat number, condition (temper), and nominal size; gross, tare, and net weight; consignor and consignee address; contract or order number; or such other information as may be defined in the contract or order.

APPENDIX

(Nonmadatory Information)

X1. SCHEDULES OF COLD-FINISHED SEAMLESS PIPE

X1.1 The schedules of cold-finished, seamless UNS N08366 pipe as given in Table X1 are regularly available. Other schedules may be furnished, and the manufacturer should be consulted. Table X1 is published for information only.

TABLE X1
PIPE SCHEDULES[A]

Nominal Pipe Size	Outside Diameter	Nominal Wall Thickness			
		Schedule No. 5	Schedule No. 10	Schedule No. 40	Schedule No. 80
		Inches			
¼	0.540	...	0.065	0.088	...
⅜	0.675	...	0.065	0.091	0.126
½	0.840	0.065	0.083	0.109	0.147
⅛	1.050	0.065	0.083	0.113	0.154
1	1.315	0.065	0.109	0.133	0.179
1¼	1.660	0.065	0.109	0.140	0.191
1½	1.900	0.065	0.109	0.145	0.200
2	2.375	0.065	0.109	0.154	0.218
2½	2.875	0.083	0.120	0.203	0.276
3	3.500	0.083	0.120	0.216	0.300
3½	4.000	0.083	0.120	0.226	0.318
4	4.500	0.083	0.120	0.237	0.337
5	5.563	...	...	0.258	...
6	6.625	...	...	0.280	...
		Millimetres			
6.4	13.72	...	1.65	2.24	...
9.5	17.14	...	1.65	2.31	3.20
12.7	21.34	1.65	2.11	2.77	3.73
19.1	26.67	1.65	2.11	2.87	3.91
25.4	33.40	1.65	2.77	3.38	4.55
31.8	42.16	1.65	2.77	3.56	4.85
38.1	48.26	1.65	2.77	3.68	5.08
50.8	60.32	1.65	2.77	3.91	5.54
63.5	73.02	2.11	3.05	5.16	7.04
76.2	88.90	2.11	3.05	5.49	7.62
88.9	101.60	2.11	3.05	5.74	8.08
101.6	114.30	2.11	3.05	6.02	8.56
127.0	141.30	...	...	6.55	...
152.4	168.28	...	...	7.11	...

[A] The pipe schedules shown above conform with standards adopted by the American National Standards Institute.

SPECIFICATION FOR IRON-NICKEL-CHROMIUM-MOLYBDENUM ALLOYS (UNS N08366 AND UNS N08367) ROD, BAR, AND WIRE

SB-691

(Identical with ASTM Specification B 691-95.)

1. Scope

1.1 This specification covers iron-nickel-chromium-molybdenum alloys (UNS N08366 and UNS N08367) in the form of hot-finished and cold-finished rounds, squares, hexagons, octagons, and rectangles.

1.2 The values stated in inch-pound units are to be regarded as standard. The values given in parentheses are for information only.

1.3 The following safety hazards caveat pertains only to the test methods portion, Section 12, of this specification: *This standard does not purport to address all of the safety concerns, if any, associated with its use. It is the responsibility of the user of this standard to establish appropriate safety and health practices and determine the applicability of regulatory limitations prior to use.*

2. Referenced Documents

2.1 *ASTM Standards:*

E 8 Test Methods for Tension Testing of Metallic Materials

E 29 Practice for Using Significant Digits in Test Data to Determine Conformance with Specifications

E 140 Standard Hardness Conversion Tables for Metals (Relationship Between Brinell Hardness, Vickers Hardness, Rockwell Hardness, Rockwell Superficial Hardness, and Knoop Hardness)

E 1473 Test Methods for Chemical Analysis of Nickel, Cobalt, and High-Temperature Alloys

3. Terminology

3.1 *Description of Terms Specific to This Standard:*

3.1.1 The terms rod, bar, and wire, as used in this specification, are described as follows:

3.1.1.1 *bar* — hot-finished or cold-finished material of round, square, hexagon, octagon, or rectangular solid section in straight lengths.

3.1.1.2 *rod* — hot-finished material of round, square, hexagon, octagon, or rectangular solid section furnished in coils for subsequent cold drawing into finished products.

3.1.1.3 *wire* — cold-finished material of round, square, hexagon, octagon, or rectangle solid section furnished in coils.

4. Ordering Information

4.1 Orders for material under this specification shall include the following information, as required:

4.1.1 Quantity (feet, metres, or number of pieces),

4.1.2 Form (rod, bar, wire),

4.1.3 Name of material or UNS number,

4.1.4 Finish (see 8.2),

4.1.5 Dimensions, including length,

4.1.6 Certification, if required (Section 15),

4.1.7 Purchaser's inspection, if required (Section 13),

4.1.8 ASTM designation and year of issue, and

4.1.9 Samples for product analysis, if required.

5. Chemical Composition

5.1 The material shall conform to the composition limits specified in Table 1.

TABLE 1
CHEMICAL REQUIREMENTS

Element	Composition Limits, % N08366	Composition Limits, % N08367	Product (Check) Analysis Variations, under min or over max, of the Specified Limit of Element, %
Carbon	0.035 max	0.030 max	0.005
Manganese	2.00 max	2.00 max	0.04
Silicon	1.00 max	1.00 max	0.05
Phosphorus	0.040 max	0.040 max	0.005
Sulfur	0.030 max	0.030 max	0.005
Chromium	20.00 to 22.00	20.00 to 22.00	0.25
Nickel	23.50 to 25.50	23.50 to 25.50	0.20
Molybdenum	6.00 to 7.00	6.00 to 7.00	0.15
Nitrogen	. . .	0.18 to 0.25	0.01
Iron[A]	Remainder	Remainder	
Copper	. . .	0.75 max	0.04

[A] Iron shall be determined arithmetically by difference.

TABLE 2
MECHANICAL PROPERTIES

	Cold-Finished-Annealed and Hot-Finished-Annealed (All Sizes)		Forging Quality (All Sizes)	
	N08366	N08367	N08366	N08367
Tensile strength, min, ksi (MPa)	75 (517)	95 (655)	[A]	[A]
Yield strength, 0.2% offset, min, ksi (MPa)	30 (206)	45 (310)	[A]	[A]
Elongation in 2 in. or 50 mm, or 4*D*, min, %	30	30	[A]	[A]

[A] No tensile properties are required on forging quality.

5.2 If a product (check) analysis is made by the purchaser, the material shall conform to the permissible variations for product (check) analysis in Table 1.

6. Mechanical Properties and Other Requirements

6.1 The material shall conform to the mechanical property requirements specified in Table 2.

7. Dimensions and Permissible Variations

7.1 *Size:*

7.1.1 *Rounds* — The permissible variations in size of cold-finished round shall be as given in Table 3. For hot-finished round bars and rod, they shall be as given in Table 4.

TABLE 3
PERMISSIBLE VARIATIONS IN DIAMETER COLD-FINISHED ROUND BARS AND WIRE

Specified Diameter, in. (mm)	Diameter Tolerance, in. (mm)[A-C] Plus and Minus
0.0030 (0.076) to 0.0048 (0.122), excl	0.0001 (0.003)
0.0048 (0.122) to 0.0080 (0.203), excl	0.0002 (0.005)
0.0080 (0.203) to 0.0120 (0.305), excl	0.0003 (0.008)
0.0120 (0.305) to 0.0240 (0.610), excl	0.0004 (0.010)
0.0240 (0.610) to 0.0330 (0.838), excl	0.0005 (0.013)
0.0330 (0.838) to 0.0440 (1.118), excl	0.0008 (0.020)
0.0440 (1.118) to 0.3125 (7.938), excl	0.001 (0.03)
0.3125 (7.938) to 0.5000 (12.700), excl	0.0015 (0.038)
0.5000 (12.700) to 1.000 (25.4), excl	0.002 (0.05)
1.000 (25.40) to 1.500 (38.10), excl	0.0025 (0.06)
1.500 (38.10) to 4.000 (101.6), incl	0.003 (0.08)

[A] Diameter tolerances are over and under as shown in the above table. Also, rounds can be produced to tolerances all over and nothing under, or all under and nothing over, or any combination of over and under, if the total spread in diameter tolerance for a specified diameter is not less than the total spread shown in the table.

[B] The maximum out-of-round tolerance for round wire is one-half of the total size tolerance shown in the above table.

[C] When it is necessary to heat treat or heat treat and pickle after cold finishing, size tolerances are double those shown in the table for sizes 0.0240 in. (0.610 mm) and over.

7.1.2 *Squares* — The permissible variations in size of cold-finished square bars shall be as given in Table 5. For hot-finished square bars and rods, they shall be as given in Table 4.

7.1.3 *Hexagons and Octagons* — The permissible variations in size of cold-finished hexagons and octagons shall be as given in Table 5. For hot-finished bar and rod hexagons and octagons, they shall be as given in Table 6.

7.1.4 *Flats* (Rectangles) — The permissible variations in width and thickness of cold-finished flats shall be as given in Table 7 for bars and for wire in Table 8. For hot-finished flat bars and rods, the tolerances for width and thickness shall be as given in Table 9.

7.2 *Out-of-Round* — Hot-finished rounds and cold-finished rounds (except forging quality), all sizes, in straight lengths, shall not be out-of-round by more than shown in Table 4 and Table 3.

7.3 *Corners* — Cold-finished squares, rectangles, hexagons and octagons will have equal angles and sharp corners.

7.4 *Machining Allowances* — When the surfaces of hot-finished material are to be machined, the allowances

TABLE 4
PERMISSIBLE VARIATIONS IN SIZE OF HOT-FINISHED ROUND AND SQUARE BARS AND RODS

Specified Size, in. (mm)	Permissible Variations from Specified Size, in. (mm)		Out-of-Round[A] or Out-of-Square,[B] in. (mm)
	Plus	Minus	
1/4 (6.4) to 5/16 (7.9), incl	0.005 (0.13)	0.005 (0.13)	0.008 (0.20)
Over 5/16 (7.9) to 7/16 (11.1), incl	0.006 (0.15)	0.006 (0.15)	0.009 (0.23)
Over 7/16 (11.1) to 5/8 (15.9), incl	0.007 (0.18)	0.007 (0.18)	0.010 (0.25)
Over 5/8 (15.9) to 7/8 (22.2), incl	0.008 (0.20)	0.008 (0.20)	0.012 (0.30)
Over 7/8 (22.2) to 1 (25.4), incl	0.009 (0.23)	0.009 (0.23)	0.013 (0.33)
Over 1 (25.4) to 1 1/8 (28.6), incl	0.010 (0.25)	0.010 (0.25)	0.015 (0.38)
Over 1 1/8 (28.6) to 1 1/4 (31.8), incl	0.011 (0.28)	0.011 (0.28)	0.016 (0.41)
Over 1 1/4 (31.8) to 1 3/8 (34.9), incl	0.012 (0.30)	0.012 (0.30)	0.018 (0.46)
Over 1 3/8 (34.9) to 1 1/2 (38.1), incl	0.014 (0.36)	0.014 (0.36)	0.021 (0.53)
Over 1 1/2 (38.1) to 2 (50.8), incl	1/64 (0.4)	1/64 (0.4)	0.023 (0.58)
Over 2 (50.8) to 2 1/2 (63.5), incl	1/32 (0.8)	0	0.023 (0.58)
Over 2 1/2 (63.5) to 3 1/2 (88.9), incl	3/64 (1.2)	0	0.035 (0.89)
Over 3 1/2 (88.9) to 4 1/2 (114.3), incl	1/16 (1.6)	0	0.046 (1.17)
Over 4 1/2 (114.3) to 5 1/2 (139.7), incl	5/64 (2.0)	0	0.058 (1.47)
Over 5 1/2 (139.7) to 6 1/2 (165.1), incl	1/8 (3.2)	0	0.070 (1.78)
Over 6 1/2 (165.1) to 8 (203.2), incl	5/32 (4.0)	0	0.085 (2.16)

[A] Out-of-round is the difference between the maximum and minimum diameters of the bar, measured at the same cross section.

[B] Out-of-square section is the difference in the two dimensions at the same cross section of a square bar, each dimension being the distance between opposite faces.

TABLE 5
PERMISSIBLE VARIATIONS IN DISTANCE BETWEEN PARALLEL SURFACES OF COLD FINISHED HEXAGONAL, OCTAGONAL, AND SQUARE BARS AND WIRE

Specified Size, in. (mm)	Permissible Variations from Specified Size, in. (mm)[A]	
	Plus	Minus
0.125 (3.18) to 0.3125 (7.938), excl	0	0.002 (0.05)
0.3125 (7.938) to 0.500 (12.70), excl	0	0.003 (0.08)
0.500 (12.70) to 1.000 (25.40), incl	0	0.004 (0.10)
Over 1 (25.40) to 2 (50.80), incl	0	0.006 (0.15)
Over 2 (50.80) to 3 (76.20), incl	0	0.008 (0.20)
Over 3 (76.20)	0	0.010 (0.25)

[A] When it is necessary to heat treat or heat treat and pickle after cold finishing, size tolerances are double those shown in the table.

given in Table 10 are recommended for normal machining operations.

7.5 *Length:*

7.5.1 Unless multiple, nominal, or cut lengths are specified, random mill lengths shall be furnished.

7.5.2 When bars are ordered in multiple lengths, 1/4 in. (6.4 mm) will be allowed for each multiple cut, unless otherwise specified.

7.5.3 The permissible variations in length of hot or cold-finished bars shall be as specified in Tables 11 or 12 depending upon whether or not the material is specified to be machine-cut after straightening.

7.6 *Ends:*

7.6.1 Bars ordered to random or nominal lengths will be furnished with either cropped or saw-cut ends.

7.6.2 Bars ordered to cut lengths will be furnished with square saw-cut or machine cut ends.

7.7 *Straightness:*

7.7.1 The permissible variations in straightness of cold-finished bars shall be as specified in Table 13.

7.7.2 The permissible variations in straightness of hot-finished bars shall be as specified in Table 13.

8. Workmanship, Finish, and Appearance

8.1 The material shall be uniform in quality and condition, smooth, commercially straight or flat, and free of injurious imperfections.

8.2 Finishes available include hot-rolled, hot rolled-annealed-descaled, cold-drawn, ground, turned, and machined.

TABLE 6
PERMISSIBLE VARIATIONS IN SIZE OF HOT-FINISHED HEXAGONAL AND OCTAGONAL BARS AND RODS

Specified Sizes Measured Between Opposite Sides, in. (mm)	Permissible Variations from Specified Size, in. (mm)		Maximum Difference, in. (mm), 3 Measurements for Hexagons Only
	Plus	Minus	
1/4 to 1/2 (6.4 to 12.7), incl	0.007 (0.18)	0.007 (0.18)	0.011 (0.28)
Over 1/2 to 1 (12.7) to (25.4), incl	0.010 (0.25)	0.010 (0.25)	0.015 (0.38)
Over 1 (25.4) to 1 1/2 (38.1), incl	0.021 (0.53)	0.021 (0.53)	0.025 (0.64)
Over 1 1/2 (38.1) to 2 (50.8), incl	1/32 (0.8)	1/32 (0.8)	1/32 (0.8)
Over 2 (50.8) to 2 1/2 (63.5), incl	3/64 (1.2)	3/64 (1.2)	3/64 (1.2)
Over 2 1/2 (63.5) to 3 1/2 (88.9), incl	1/16 (1.6)	1/16 (1.6)	1/16 (1.6)

TABLE 7
PERMISSIBLE VARIATIONS IN WIDTH AND THICKNESS OF COLD-FINISHED FLAT BARS

Width, in. (mm)	Width Tolerance, in. (mm), Plus and Minus[A]	
	For Thicknesses 0.250 in. (6.35) and Under	For Thicknesses Over 0.250 in. (6.35)
0.375 (9.53) to 1 (25.40), incl	0.004 (0.10)	0.002 (0.05)
Over 1 (25.40) to 2 (50.80), incl	0.006 (0.15)	0.003 (0.08)
Over 2 (50.80) to 3 (76.20), incl	0.008 (0.20)	0.004 (0.10)
Over 3 (76.20) to 4.500 (114.30), incl[B]	0.010 (0.25)	0.005 (0.13)

Thickness, in. (mm)	Thickness Tolerance in. (mm), Plus and Minus[A]
0.125 (3.18) to 1 (25.40), incl	0.002 (0.05)
Over 1 (25.40) to 2 (50.80), incl	0.003 (0.08)
Over 2 (50.80) to 3 (76.20), incl	0.004 (0.10)
Over 3 (76.20) to 4.500 (114.30), incl[B]	0.005 (0.13)

[A] When it is necessary to heat treat or heat treat and pickle after cold finishing, tolerances are double those shown in the table.

[B] Cold-finished flat bars over 4.500 in. (114.3 mm) wide or thick are produced: width and thickness tolerances for such bars are not included herein.

9. Sampling

9.1 *Lot Definition:*

9.1.1 A lot for chemical analysis shall consist of one heat.

9.1.2 Lots for mechanical testing shall consist of the material from one heat, in the same condition (temper), and of the same specified size (excepting length) and cross-section.

9.2 *Test Material Selection:*

9.2.1 *Sampling for Chemical Analysis:*

9.2.1.1 An analysis of each lot shall be made by the manufacturer from a representative sample obtained during the pouring of the heat or subsequent processing.

9.2.1.2 If samples for product (check) analysis are specified, a representative sample shall be taken from each lot of finished material.

9.2.2 *Sampling for Mechanical Testing* — Samples of the material to provide test specimens for mechanical testing shall be taken from such locations in each lot (see 9.1.2) as to be representative of that lot.

10. Number of Tests and Retests

10.1 *Chemical Analysis* — One test per lot.

10.2 *Mechanical Tests and Tension Tests* — One test per lot.

TABLE 8
PERMISSIBLE VARIATIONS IN WIDTH AND THICKNESS OF COLD-FINISHED FLAT COILS[A]

Specified Width, in. (mm)	Permissible Variations in Thickness, in. (mm) Plus and Minus, for Given Thicknesses, in. (mm)			Permissible Variations in Width, in. (mm), for Given Width, in. (mm)	
	Under 0.029 (0.74)	0.029 (0.74) to 0.035 (0.89), excl	0.035 (0.89) to 0.1875 (4.76), excl	Plus	Minus
0.0625 (1.588) to 0.375 (9.52), excl	0.001 (0.03)	0.0015 (0.038)	0.002 (0.05)	0.005 (0.13)	0.005 (0.13)

[A] Where it is necessary to heat treat or heat treat and pickle after cold finishing, size variations are double those shown in the table.

TABLE 9
PERMISSIBLE VARIATIONS IN THICKNESS AND WIDTH FOR HOT-FINISHED FLAT BARS AND RODS

	Thickness Tolerances, in., for Thicknesses Given										
	⅛ to ½ incl	Over ½ to 1 incl	Over 1 to 2 incl	Over 2 to 4 incl		Over 4 to 6 incl		Over 6 to 8 incl		Width Tolerance, in.	
Specified Widths, in.	Plus and Minus			Plus	Minus	Plus	Minus	Plus	Minus	Plus	Minus
Up to 1, incl	0.008	0.010	...	...	...	...	...	...	...	0.015	0.015
Over 1 to 2, incl	0.012	0.015	0.031	...	...	...	...	...	...	0.031	0.031
Over 2 to 4, incl	0.015	0.020	0.031	0.062	0.031	...	...	...	...	0.062	0.031
Over 4 to 6, incl	0.015	0.020	0.031	0.062	0.031	0.093	0.062	...	...	0.093	0.062
Over 6 to 8, incl	0.016	0.025	0.031	0.062	0.031	0.093	0.062	0.125	0.156	0.125	0.156
Over 8 to 10, incl	0.021	0.031	0.031	0.062	0.031	0.093	0.062	0.125	0.156	0.156	0.187
SI Equivalents											
	Thickness Tolerances, mm, for Thicknesses Given										
	3.18 to 12.70 incl	Over 12.70 to 25.40 incl	Over 25.40 to 50.80 incl	Over 50.80 to 101.6 incl		Over 101.6 to 152.4 incl		Over 152.4 to 203.2 incl		Width Tolerance, incl	
Specified Widths, mm	Plus and Minus			Plus	Minus	Plus	Minus	Plus	Minus	Plus	Minus
Up to 25.40, incl	0.20	0.25	...	...	...	...	...	...	...	0.38	0.38
Over 25.40 to 50.80, incl	0.30	0.38	0.79	...	...	...	...	...	...	0.79	0.79
Over 50.80 to 101.60, incl	0.38	0.51	0.79	1.57	0.79	...	...	...	...	1.57	0.79
Over 101.60 to 152.40, incl	0.38	0.51	0.79	1.57	0.79	2.36	1.57	...	...	2.36	1.57
Over 152.40 to 203.20, incl	0.41	0.64	0.79	1.57	0.79	2.36	1.57	3.18	3.96	3.18	3.96
Over 203.20 to 254.00, incl	0.53	0.79	0.79	1.57	0.79	2.36	1.57	3.18	3.96	3.96	4.75

10.3 *Retests* — If the specimen used in the mechanical test of any lot fails to meet the specified requirements, an additional specimen shall be taken from a different sample piece and tested. The results of this test specimen shall meet the specified requirements.

11. Specimen Preparation

11.1 Tension test specimens shall be taken from material in the final condition (temper) and tested in the direction of fabrication.

11.2 All rod and bar shall be tested in full cross-section size when possible. When a full cross-section size test cannot be performed, the largest possible round specimen shown in Test Methods E 8 shall be used. Longitudinal strip specimens shall be prepared in accordance with Test Methods E 8 for flats up to ½ in. (12.7 mm), incl, in thickness that are too wide to be pulled full size.

12. Test Methods

12.1 Determine the chemical composition and mechanical properties of the material, as enumerated in this specification, in the case of disagreement, in accordance with the following ASTM methods:

12.1.1 *Chemical Analysis* — Test Methods E 1473.

12.2 *Tension test* — Test Methods E 8.

12.3 *Determination of significant places* — For purposes of determining compliance with the specified limits for the requirements of the properties listed in the following table, round an observed or a calculated value as indicated, in accordance with the rounding methods of Practice E 29.

Requirement	Rounded Unit for Observed or Calculated Value
Chemical composition	Nearest unit in the last right-hand place of figures of the specified limit
Tensile strength and yield strength	Nearest 1000 psi (7 MPa)
Elongation	Nearest 1%

13. Inspection

13.1 Inspection of the material shall be agreed upon between the purchaser and the producer or supplier as part of the purchase contract.

TABLE 10
NORMAL MACHINING ALLOWANCES FOR HOT-FINISHED MATERIAL

Finished-Machined Dimensions for Conditions as Indicated Below, in. (mm)[A]	On Diameter for Rounds	Distance Between Parallel Surfaces, for Hexagons, Squares	For Rectangles	
			On Thickness	On Width
Hot-finished:[B]				
Up to 7/8 (22.2), incl	1/8 (3.2)	1/8 (3.2)	1/8 (3.2)	3/16 (4.8)
Over 7/8 to 1 7/8 (22.2 to 47.6), incl	1/8 (3.2)	3/16 (4.8)	1/8 (3.2)	3/16 (4.8)
Over 1 7/8 to 2 7/8 (47.6 to 73.0), incl	3/16 (4.8)	1/4 (6.4)	...	3/16 (4.8)
Over 2 7/8 to 3 13/16 (73.0 to 96.8), incl	1/4 (6.4)	...	...	3/16 (4.8)
Over 3 13/16 (96.8)	1/4 (6.4)	...	...	3/8 (9.5)
Hot-finished rounds:				
Rough-turned:[C]				
15/16 to 4 (23.8 to 101.6), incl in diameter	1/16 (1.6)	...	...	...
Over 4 to 12 (101.6 to 304.8), incl in diameter	1/8 (3.2)	...	...	...
Semi-smooth machined:				
Over 2 1/2 to 4 (63.5 to 101.6), incl	1/16[D] (1.6)	...	...	...
Over 2 1/2 to 4 (63.5 to 101.6), incl	1/8[E] (3.2)	...	...	...
Over 4 to 10 (101.6 to 254.0), incl	1/8[F] (3.2)	...	...	...

[A] Dimensions apply to diameter of rounds, to distance between parallel surfaces of hexagons and squares, and separately to width and thickness of rectangles.

[B] The allowances in Table 9 for hot-finished material are recommended for rounds machined in lengths of 3 ft (0.9 m) or less and for squares, hexagons, and rectangles machined in lengths of 2 ft (0.6 m) or less. Hot-finished material to be machined in longer lengths should be specified showing the finished cross-sectional dimensions and the length in which the material will be machined in order that the manufacturer may supply material with sufficient oversize, including allowance for out-of-straightness.

[C] Applicable to 3 ft (0.9 m) max length.

[D] Applicable to 10 ft (3.0 m) max length.

[E] Applicable to lengths over 10 to 20 ft (3.0 to 6.1 m), incl.

[F] Applicable to 30 ft (9.1 m) max lengths.

TABLE 11
PERMISSIBLE VARIATIONS IN LENGTH OF HOT-FINISHED OR COLD-FINISHED BARS

Specified Size of Rounds, Squares, Hexagons, Octagons, and Widths of Flats, in. (mm)	Permissible Variations in Length, in. (mm)			
	To 12 ft (3658 mm)		Over 12 ft (3658 mm) to 25 ft (7620 mm)	
	Plus	Minus	Plus	Minus
Up to 2 (50.80), incl	1/2 (12.70)	0	3/4 (19.05)	0
Over 2 (50.80) to 4 (101.60), incl	3/4 (19.05)	0	1 (25.40)	0
Over 4 (101.6) to 6 (152.4), incl	1 (25.40)	0	1 1/4 (31.75)	0
Over 6 (152.4) to 9 (228.6), incl	1 1/4 (31.75)	0	1 1/2 (38.10)	0
Over 9 (228.6) to 12 (304.8)	1 1/2 (38.10)	0	2 (50.80)	0

NOTE — These tolerances are not applicable when bars are ordered random length.

14. Rejection and Rehearing

14.1 Material that fails to conform to the requirements of this specification may be rejected. Rejection shall be reported to the producer or supplier promptly and in writing. In case of dissatisfaction with the results of the test, the producer or supplier may make claim for a rehearing.

15. Certification

15.1 When specified in the purchase order or contract, a producer's or supplier's certification shall be furnished to the purchaser that the material was manufactured, sampled, tested, and inspected in accordance with this specification and has been found to meet the requirements.

TABLE 12
PERMISSIBLE VARIATIONS IN LENGTH OF HOT-FINISHED OR COLD-FINISHED BARS MACHINE CUT AFTER MACHINE STRAIGHTENING

Specified Sizes of Rounds, Squares, Hexagons, Octagons, and Widths of Flats, in. (mm)	Length, ft (mm)	Tolerance, in. (mm)	
		Plus	Minus
0.125 (3.18) and under	up to 12 (3658), incl	1/16 (1.6)	0
0.125 (3.18) and under	over 12 (3658)	1/8 (3.2)	0
Over 0.125 (3.18) to 0.500 (12.70), incl	under 3 (914)	1/32 (0.8)	0
Over 0.125 (3.18) to 0.500 (12.70), incl	3 (914) to 12 (3658), incl	1/16 (1.6)	0
Over 0.125 (3.18) to 0.500 (12.70), incl	over 12 (3658)	1/8 (3.2)	0
Over 0.500 (12.70) to 3 (76.20), incl	up to 12 (3658), incl	1/8 (3.2)	0
Over 0.500 (12.70) to 3 (76.20), incl	over 12 (3658)	3/16 (4.8)	0
Over 3 (76.20) to 6 (152.40), incl	up to 12 (3658), incl	3/16 (4.8)	0
Over 3 (76.20) to 6 (152.40), incl	over 12 (3658)	1/4 (6.4)	0
Over 6 (152.40) to 9 (228.60), incl	up to 12 (3658), incl	1/4 (6.4)	0
Over 6 (152.40) to 9 (228.60), incl	over 12 (3658)	5/16 (7.9)	0
Over 9 (228.60) to 12 (304.80), incl	up to 12 (3658), incl	1/2 (12.7)	0
Over 9 (228.60) to 12 (304.80), incl	over 12 (3658)	1/2 (12.7)	0

NOTE — These tolerances are not applicable when bars are ordered random length.

When specified in the purchase order or contract, a report of the test results shall be furnished.

16. Product Marking

16.1 Each bundle or shipping container shall be marked with the name of the material, UNS number, heat number, condition (temper), the specification number, the size, gross, tare, and net weights, consignor and consignee address, contract or order number, or such other information as may be defined in the contract or purchase order.

16.2 When so specified on the contract or purchase order, larger size bars shall be marked individually with the name of the material, heat number, condition (temper), the specification number, size, and producer's name or mark.

17. Keywords

17.1 bar; N08366; N08367; rod; wire

TABLE 13
PERMISSIBLE VARIATIONS IN STRAIGHTNESS OF MACHINE STRAIGHTENED OF MACHINE STRAIGHTENED HOT-FINISHED OR COLD-FINISHED BARS

Measurement is taken on the concave side of the bar with a straightedge. Unless otherwise specified, hot-finished or cold-finished bars for machining purposes are furnished machine straightened to the following tolerances:

Hot-finished:

1/8 in. in any 5 ft; but may not exceed 1/8 in. × (length in ft/5)

or

3.2 mm in any 1.5 m; but may not exceed 3.2 × (length in m/1.5)

Cold-finished:

1/16 in. in any 5 ft; but may not exceed 1/16 in. × (length in ft/5)

or

1.6 mm in any 1.5 m; but may not exceed 1.6 × (length in m/1.5)

SPECIFICATION FOR WELDED UNS N06625, UNS N06219, AND UNS N08825 ALLOY TUBES

SB-704

(Identical with ASTM Specification B 704-00 except that certification has been made mandatory in para. 3.1.8 and editorial corrections have been made.)

1. Scope

1.1 This specification covers welded UNS N06625, UNS N06219, and UNS N08825 alloy boiler, heat exchanger, and condenser tubes for general corrosion resisting and low- or high-temperature service.

1.2 This specification covers tubes $\frac{1}{8}$ to 5 in. (3.18 to 127 mm), inclusive, in outside diameter and 0.015 to 0.500 in. (0.38 to 12.70 mm), inclusive, in wall thickness. Specification SB-751 lists the dimensional requirements of these sizes. Tubes having other dimensions may be furnished provided such tubing complies with all other requirements of this specification.

1.3 The values stated in inch-pound units are to be regarded as the standard. The values given in parentheses are for information only.

2. Referenced Documents

2.1 *ASTM/ASME Standards:*

SB-751 Specification for General Requirements for Nickel and Nickel Alloy Welded Tube

E 8 Test Methods for Tension Testing of Metallic Materials

3. Ordering Information

3.1 Orders for material to this specification should include the following information:

3.1.1 Quantity (feet or number of lengths);

3.1.2 UNS number;

3.1.3 Size (outside diameter, minimum or average wall thickness);

3.1.4 Length (random or specific);

3.1.5 Class; and

3.1.6 ASME designation.

3.1.7 *Product Analysis* — State if required;

3.1.8 *Certification* — Certification and a report of test results are required; and

3.1.9 *Purchaser Inspection* — State which tests or inspections are to be witnessed, if any.

4. Materials and Manufacture

4.1 Tube shall be made from flat-rolled alloy by an automatic welding process with no addition of filler metal. Subsequent to welding and prior to final annealing, the material shall be cold-worked in either the weld metal only or both weld and base metal.

4.2 Tube shall be furnished with oxide removed. When bright annealing is used, descaling is not necessary.

5. Chemical Composition

5.1 The material shall conform to the composition limits specified in Table 1. One test is required for each lot as defined in Specification SB-751.

5.2 If a product analysis is performed, it shall meet the chemistry limits prescribed in Table 1, subject to the analysis tolerances of Specification SB-751.

6. Mechanical and Other Properties

6.1 *Mechanical Properties* — The material shall conform to the mechanical property requirements specified in Table 2. One test is required for each lot as defined in Specification SB-751.

TABLE 1
CHEMICAL REQUIREMENTS

	Composition Limits, %		
	UNS N06625	UNS N06219	UNS N08825
Ni	58.0 min.[A]	Bal	38.0–46.0
Cr	20.0–23.0	18.0–22.0	19.5–23.5
Fe	5.0 max.	2.0–4.0	22.0 min.[A]
Mo	8.0–10.0	7.0–9.0	2.5–3.5
Cb + Ta	3.15–4.15	...	...
C	0.10 max.	0.05 max.	0.05 max.
Mn	0.50 max.	0.50 max.	1.0 max.
Si	0.5 max.	0.70–1.10	0.5 max.
P	0.015 max.	0.020 max.	...
S	0.015 max.	0.010 max.	0.03 max.
Al	0.4 max.	0.50 max.	0.2 max.
Ti	0.40 max.	0.50 max.	0.6–1.2
Co (if determined)	1.0 max.	1.0 max.	...
Cu	...	0.50 max.	1.5–3.0

[A] Element may be determined arithmetically by difference.

TABLE 2
MECHANICAL PROPERTY REQUIREMENTS

Alloy	Tensile Strength, min, psi (MPa)	Yield Strength,[A] 0.2% Offset, min, psi (MPa)	Elongation in 2 in. or 50 mm, min, %
UNS N06625	120,000 (827)	60,000 (414)	30
UNS N06219	96,000 (660)	39,000 (270)	30
UNS N08825	85,000 (586)	35,000 (240)	30

[A] Yield strength shall be determined by the offset method at 0.2% limiting permanent set in accordance with Test Methods E 8.

6.2 *Flattening Test* — A flattening test shall be made on each end of one tube per lot. Superficial ruptures resulting from surface imperfections shall not be cause for rejection.

6.3 *Flange Test* — A flange test shall be made on each end of one tube per lot.

6.4 *Nondestructive Test Requirements:*

6.4.1 *Class 1* — Each piece in each lot shall be subject to one of the following four tests: hydrostatic, pneumatic (air underwater), eddy current, or ultrasonic.

6.4.2 *Class 2* — Each piece in each lot shall be subjected to a leak test and an electric test as follows:

6.4.2.1 *Leak Test* — hydrostatic or pneumatic (air underwater), and

6.4.2.2 *Electric Test* — eddy current or ultrasonic.

6.5 The manufacturer shall have the option to test to Class 1 or 2 and select the nondestructive test methods, if not specified by the purchaser.

7. General Requirements

7.1 Material furnished under this specification shall conform to the applicable requirements of the current edition of Specification SB-751 unless otherwise provided herein.

8. Keywords

8.1 UNS N06625; UNS N06219; UNS N08825; welded tube

SPECIFICATION FOR NICKEL-ALLOY (UNS N06625, UNS N06219, AND UNS N08825) WELDED PIPE

SB-705

(Identical with ASTM Specification B 705-00 except that certification has been made mandatory.)

1. Scope

1.1 This specification covers welded UNS N06625, UNS N06219, and UNS N08825 pipe in the annealed condition (temper) for general corrosion applications.

1.2 This specification covers pipe sizes in schedules shown in Table 2 of standard SB-775.

1.3 The values stated in inch-pound units are to be regarded as the standard. The values given in parentheses are for information only.

1.4 The following precautionary caveat pertains only to the test methods portion, Section 8, of this specification: *This standard does not purport to address all of the safety concerns, if any, associated with its use. It is the responsibility of the user of this standard to establish appropriate safety and health practices and determine the applicability of regulatory limitations prior to use.*

2. Referenced Documents

2.1 *ASTM/ASME Standards:*

SB-775 Specification for General Requirements for Nickel and Nickel Alloy Welded and Seamless Pipe

B 880 Specification for General Requirements for Chemical Check Analysis Limits for Nickel, Nickel Alloys, and Cobalt Alloys

3. General Requirement

3.1 Material furnished in accordance with this specification shall conform to the applicable requirements of the current edition of Specification SB-775 unless otherwise provided herein.

4. Definition of Terms

4.1 *Class 1* — Welded, cold worked, annealed, and nondestructively tested in accordance with 9.1.

4.2 *Class 2* — Welded, cold worked, annealed, and nondestructively tested in accordance with 9.2.

5. Ordering Information

5.1 It is the responsibility of the purchaser to specify all requirements that are necessary for the safe and satisfactory performance of material ordered under this specification. Examples of such requirements include, but are not limited to, the following:

5.1.1 Alloy name or UNS number;

5.1.2 ASME designation;

5.1.3 *Dimensions:*

5.1.3.1 Pipe size;

5.1.3.2 Length (specific or random);

5.1.4 Class (see 3);

5.1.5 Quantity (feet or number of pieces);

5.1.6 *Certification* — Certification is required;

5.1.7 *Samples for Product (Check) Analysis* — State whether samples for product (check) analysis should be furnished (7.2); and

5.1.8 *Purchaser Inspection* — If the purchaser wishes to witness tests or inspection of material at the place of manufacture, the purchase order must so state indicating which tests or inspections are to be witnessed.

6. Material and Manufacture

6.1 Pipe shall be made from flat-rolled alloy by an automatic welding process with no addition of filler metal. Subsequent to welding and prior to final annealing, the material shall be cold worked in either the weld metal only or both weld and base metal.

TABLE 1
CHEMICAL REQUIREMENTS

	Composition Limits, %		
	UNS N06625	UNS N06219	UNS N08825
Ni	58.0 min.[A]	Bal	38.0–46.0
Cr	20.0–23.0	18.0–22.0	19.5–23.5
Fe	5.0 max.	2.0–4.0	22.0 min.[A]
Mo	8.0–10.0	7.0–9.0	2.5–3.5
Cb + Ta	3.15–4.15	...	...
C	0.10 max.	0.05 max.	0.05 max.
Mn	0.50 max.	0.50 max.	1.0 max.
Si	0.5 max.	0.70–1.10	0.5 max.
P	0.015 max.	0.020 max.	...
S	0.015 max.	0.010 max.	0.03 max.
Al	0.4 max.	0.50 max.	0.2 max.
Ti	0.40 max.	0.50 max.	0.6–1.2
Co (if determined)	1.0 max.	1.0 max.	...
Cu	...	0.50 max.	1.5–3.0

[A] Element may be determined arithmetically by difference.

6.2 Pipe shall be furnished with oxide removed. When bright annealing is used, descaling is not necessary.

7. Chemical Composition

7.1 The material shall conform to the composition limits specified in Table 1. One test per lot shall be performed.

7.2 If a product (check) analysis is performed by the purchaser, the material shall conform to the product (check) analysis variations per B 880.

8. Mechanical Properties and Other Requirements

8.1 *Mechanical Properties* — The material shall conform to the mechanical properties specified in Table 2. One pipe per lot shall be examined.

8.2 *Flattening Test* — A section of pipe not less than 4 in. (102 mm) in length shall be capable of withstanding, without cracking, flattening under a load applied gradually at room temperature until the distance between the platens is five times the wall thickness. The weld shall be positioned 90° from the direction of the applied flattening force. One pipe per lot shall be examined.

8.2.1 Superficial ruptures resulting from surface imperfections shall not be a cause for rejection.

TABLE 2
MECHANICAL PROPERTY REQUIREMENTS

Alloy	Tensile Strength, Min., psi (Mpa)	Yield Strength 0.2% Offset, Min., psi (MPa)	Elongation in 2 in. or 50 mm, Min., %
UNS N06625	120 000 (827)	60 000 (414)	30
UNS N06219	96 000 (660)	39 000 (270)	30
UNS N08825	85 000 (586)	35 000 (240)	30

9. Nondestructive Testing

9.1 *Class 1* — Each piece in each lot shall be subjected to one of the following four tests: hydrostatic, pneumatic (air underwater), eddy current, or ultrasonic.

9.2 *Class 2* — Each piece in each lot shall be subjected to a leak test and an electric test as follows:

9.2.1 *Leak Test* — hydrostatic or pneumatic (air underwater), and

9.2.2 *Electric Test* — eddy current or ultrasonic.

9.3 The manufacturer shall have the option to test to Class 1 or 2 and select the nondestructive test methods, if not specified by the purchaser.

10. Keywords

10.1 UNS N06219; UNS N06625; UNS N08825; welded pipe

SPECIFICATION FOR IRON-NICKEL-CHROMIUM-MOLYBDENUM ALLOY (UNS N08028) PLATE, SHEET, AND STRIP

SB-709

(Identical with ASTM Specification B 709-93.)

1. Scope

1.1 This specification covers iron-nickel-chromium-molybdenum alloy (UNS N08028) plate, sheet, and strip in the solution-annealed condition.

1.2 The values stated in inch-pound units are to be regarded as the standard.

2. Referenced Documents

2.1 *ASTM Standards:*

E 8 Test Methods of Tension Testing of Metallic Materials

E 10 Test Method for Brinell Hardness of Metallic Materials

E 18 Test Methods for Rockwell Hardness and Rockwell Superficial Hardness of Metallic Materials

E 29 Practice for Using Significant Digits in Test Data to Determine Conformance with Specifications

E 38 Methods for Chemical Analysis of Nickel-Chromium and Nickel-Chromium-Iron Alloys

E 55 Practice for Sampling Wrought Nonferrous Metals and Alloys for Determination of Chemical Composition

E 140 Standard Hardness Conversion Tables for Metals (Relationship Between Brinell Hardness, Vickers Hardness, Rockwell Hardness, Rockwell Superficial Hardness, and Knoop Hardness)

E 353 Test Methods for Chemical Analysis of Stainless, Heat-Resisting, Maraging, and Other Similar Chromium-Nickel-Iron Alloys

3. Terminology

3.1 *Descriptions of Terms Specific to This Standard:*

3.2 The terms of plate, sheet, and strip as used in this specification are described as follows:

3.2.1 *plate* — material 0.187 in. (4.76 mm) and over in thickness and over 10 in. (254 mm) in width.

3.2.2 *sheet* — material under 0.187 in. (4.75 mm) in thickness and over 24 in. (610 mm) in width.

3.2.3 *strip* — material under 0.187 in. (4.75 mm) in thickness and under 24 in. (610 mm) in width.

4. Ordering Information

4.1 Orders for material under this specification shall include the following information:

4.1.1 Quantity (weight or number of pieces),

4.1.2 Name of material or UNS N08028,

4.1.3 Form (plate, sheet, or strip),

4.1.4 Dimensions,

4.1.5 Type of edge required (for strip only, see 9.4),

4.1.6 *Finish* (Section 10) — For sheet ordered with No. 4 finish, specify whether one or both sides are to be polished,

4.1.7 *ASTM designation and year of issue,*

4.1.8 *Marking* — State if metal die identification is required on plate $\frac{1}{4}$ in. (6.35 mm) or thicker (Section 18),

4.1.9 *Certification or Test Reports* — State if certification or test reports are required (Section 17), and

4.1.10 *Source Inspection* — State if inspection is required (Section 15).

TABLE 1
CHEMICAL REQUIREMENTS

Element	Composition, %
Ni	29.5 to 32.5
Fe	remainder[A]
Cr	26.0 to 28.0
Mo	3.0 to 4.0
C, max	0.030
Si, max	1.00
Mn, max	2.50
P, max	0.030
S, max	0.030
Cu	0.6 to 1.4

[A] Determined arithmetically by difference.

TABLE 2
PRODUCT (CHECK) ANALYSIS

Element	Tolerances Over the Max Limit or Under the Min Limit, %
Ni	0.30
Cr	0.25
Mo	0.10
C	0.005
Si	0.05
Mn	0.04
P	0.005
S	0.005
Cu	0.10

5. Materials and Manufacture

5.1 *Heat Treatment* — The final heat treatment shall be a solution-anneal. Minor cold working such as flattening or temper rolling may be performed after the final solution annealing treatment.

NOTE — This recommended solution-anneal consists of heating to a minimum temperature of 1975°F (1080°C) and cooling rapidly to room temperature.

6. Chemical Composition

6.1 The material sampled in accordance with 11.2 shall conform to the composition limits prescribed in Table 1.

6.2 If a product analysis is subsequently made, the material shall conform to the composition limits with the product analysis variation prescribed in Table 2.

7. Mechanical Properties

7.1 The material shall conform to the requirements as to the mechanical property prescribed in Table 3.

TABLE 3
MECHANICAL PROPERTY REQUIREMENTS

Form	Tensile Strength, min, ksi (MPa)	Yield Strength, 0.2% Offset, min, ksi (MPa)	Elongation in 2 in. or 50 mm, or 4*D*, min, %	Rockwell Hardness (or Equivalent)[A]
Sheet	73 (500)	31 (214)	40	70–90 HRB
Strip	73 (500)	31 (214)	40	70–90 HRB
Plate	73 (500)	31 (214)	40	70–90 HRB

[A] Hardness values are shown for information only and shall not constitute a basis for acceptance or rejection as long as the other mechanical properties are met.

TABLE 4
THICKNESS TOLERANCES FOR HOT-ROLLED AND COLD-ROLLED SHEETS

Specified Thickness, in. (mm)	Tolerance, over and under, in. (mm)
Over 0.145 to less than 0.187 (3.68 to less than 4.76)	0.014 (0.36)
Over 0.130 to 0.145 (3.30 to 3.68), incl	0.012 (0.30)
Over 0.114 to 0.130 (2.90 to 3.30), incl	0.010 (0.25)
Over 0.098 to 0.114 (2.49 to 2.90), incl	0.009 (0.23)
Over 0.083 to 0.098 (2.11 to 2.49), incl	0.008 (0.20)
Over 0.072 to 0.083 (1.83 to 2.11), incl	0.007 (0.18)
Over 0.058 to 0.072 (1.47 to 1.83), incl	0.006 (0.15)
Over 0.040 to 0.058 (1.02 to 1.47), incl	0.005 (0.13)
Over 0.026 to 0.040 (0.66 to 1.02), incl	0.004 (0.10)
Over 0.016 to 0.026 (0.41 to 0.66), incl	0.003 (0.08)
Over 0.007 to 0.016 (0.18 to 0.41), incl	0.002 (0.05)
Over 0.005 to 0.007 (0.13 to 0.18), incl	0.0015 (0.04)
0.005 (0.13)	0.001 (0.03)

8. Dimensions and Permissible Variations

8.1 *Sheet* — The material referred to as sheet shall conform to the variations in dimensions prescribed in Tables 4 to 9, inclusive.

8.2 *Cold-Rolled Strip* — The material referred to as cold-rolled strip shall conform to the permissible variations in dimensions prescribed in Tables 10 to 13, inclusive.

8.3 *Plate* — The material referred to as plate shall conform to the permissible variations in dimensions prescribed in Tables 14 to 19, inclusive.

8.4 *Edges for Cold-Rolled Strip* — The various types of edges procurable shall be as follows:

8.4.1 *No. 1. Edge* — Rolled edge, contour as specified.

8.4.2 *No. 3 Edge* — An edge produced by slitting.

TABLE 5
WIDTH AND LENGTH TOLERANCES FOR HOT-ROLLED AND COLD-ROLLED RESQUARED SHEETS (STRETCHER LEVELED FLATNESS)

Specified Dimensions, in. (mm)	Tolerance, in. (mm) Over	Under
For thicknesses under 0.031 (0.79):		
Widths up to 48 (1219), excl	1/16 (1.6)	0
Widths 48 (1219) and over	1/8 (3.2)	0
Lengths up to 120 (3048), excl	1/16 (1.6)	0
Lengths 120 (3048) and over	1/8 (3.2)	0
For thicknesses 0.031 (0.79) and over:		
All widths and lengths	1/4 (6.4)	0

TABLE 6
WIDTH, LENGTH, AND CAMBER TOLERANCES FOR HOT-ROLLED AND COLD-ROLLED SHEETS NOT REQUIRED

Width Tolerances		
	Tolerance for Specified Width, in. (mm)	
Specified Thickness, in. (mm)	24 to 48 (610 to 1219), excl	48 in. (1219) and over
Less than 3/16 (4.76)	1/16 (1.6) over, 0 under	1/8 in. (3.2) over, 0 under

Length Tolerances		
Specified Length, ft (mm)	Tolerance, in. (mm) Over	Under
Up 10 (3050), incl	1/4 (6.4)	0 (0)
Over 10 to 20 (3050 to 6100), incl	1/2 (12.7)	0 (0)

Camber Tolerances[A]	
Specified Width, in. (mm)	Tolerance per Unit Length of any 8 ft (2440 mm), in. (mm)
24 to 36 (610 to 914), incl	1/8 (3.2)
Over 36 (914)	3/32 (2.4)

[A] Camber is the greatest deviation of a side edge from a straight line, and measurement is taken by placing an 8-ft (2440-mm) straightedge on the concave side and measuring the greatest distance between the sheet edge and the straight edge.

8.4.3 *No. 5 Edge* — Approximately square edge produced by rolling or filing, or both, after slitting.

9. Workmanship, Finish, and Appearance

9.1 The material shall be free of injurious imperfections and shall correspond to the designated finish as described as follows:

9.1.1 *Sheet* — The various types of finish procurable on sheet products shall be as follows:

9.1.1.1 *No. 1 Finish* — Hot-rolled, annealed, and descaled; produced by hot rolling to specified thicknesses followed by annealing and descaling (see 10.2).

9.1.1.2 *No. 2D Finish* — Dull, cold-rolled finish; produced by cold rolling to the specified thickness, annealing and descaling. The dull finish results from the descaling and pickling operations.

9.1.1.3 *No. 2B Finish* — Bright, cold-rolled finish; produced by giving a final light cold-rolled pass with polished rolls, to a sheet that has been annealed and descaled.

9.1.1.4 *No. 4 Finish* — General-purpose polished finish. Following initial grinding with coarser abrasives, sheets are generally finished last with abrasives approximately 120 to 150 mesh. Sheets can be produced with one or two sides polished. When polished on one side only, the other side may be rough ground in order to obtain the necessary flatness.

9.1.1.5 *Bright annealed* — Bright finish produced by cold rolling to thickness, then annealing in a protective atmosphere.

9.1.2 *Strip* — The type of finish procurable on cold-rolled strip shall be as follows:

9.1.2.1 *No. 1 Finish* — Cold-rolled to specified thickness annealed and pickled (see 10.2). Appearance of this finish is a dull gray.

9.1.2.2 *No. 2 Finish* — Same as No. 1 finish, followed by a final light cold-rolled pass, generally on highly polished rolls.

9.1.2.3 *Bright-Annealed* — Bright finish produced by cold-rolling to thickness, then annealing in a protective atmosphere.

9.1.3 *Plate* — The types of finish procurable on plates shall be as follows:

9.1.3.1 *Hot- or Cold-Rolled, Annealed* — Scale not removed.

9.1.3.2 *Hot- or Cold-Rolled, Annealed, Descaled* — Scale removed by a blast cleaning or pickling operation.

9.2 Spot grinding to remove surface imperfections is permitted, provided such grinding does not reduce the thickness or width at any point beyond the permissible variations in dimensions.

10. Sampling

10.1 *Lot for Chemical Analysis, Mechanical Testing, and Corrosion Testing:*

TABLE 7
FLATNESS TOLERANCES FOR HOT-ROLLED AND COLD-ROLLED SHEETS

Specified Thickness, in. (mm)	Width, in. (mm)	Flatness Tolerance (max Deviation from a Horizontal Flat Surface), in. (mm)
Sheets not Specified to Stretcher Leveled Standard of Flatness		
0.062 (1.57) and over	to 60 (1524), incl	½ (12.7)
	Over 60 to 72 (1524 to 1829), incl	¾ (19.1)
	over 72 (1829)	1 (25.4)
Under 0.062 (1.57)	to 36 (914), incl	½ (12.7)
	over 36 to 60 (914 to 1524), incl	¾ (19.1)
	over 60 (1524)	1 (25.4)

Specified Thickness, in. (mm)	Width, in. (mm)	Length, in. (mm)	Flatness Tolerance, in. (mm)
Sheets Specified to Stretcher Level Standard of Flatness			
Under 3/16 (4.76)	to 48 (1219), incl	to 96 (2438), incl	1/8 (3.2)
Under 3/16 (4.76)	to 48 (1219), incl	over 96 (2438)	1/4 (6.4)
Under 3/16 (4.76)	over 48 (1219)	to 96 (2438), incl	1/4 (6.4)
Under 3/16 (4.76)	over 48 (1219)	over 96 (2438)	1/4 (6.4)

TABLE 8
DIAMETER TOLERANCES FOR HOT-ROLLED AND COLD-ROLLED SHEETS, SHEARED CIRCLES

Specified Thickness, in. (mm)	Tolerance over Specified Diameter (No Tolerance Under), in. (mm)		
	Under 30 (762)	30 to 48 (762 to 1219), incl	Over 48 (1219)
Over 0.097 (2.46)	1/8 (3.2)	3/16 (4.8)	1/4 (6.4)
Over 0.057 to 0.097 (1.45 to 2.46), incl	3/32 (2.4)	5/32 (4.0)	7/32 (5.6)
0.057 (1.45) and under	1/16 (1.6)	1/8 (3.2)	3/16 (4.8)

TABLE 9
WEIGHT TOLERANCES FOR HOT-ROLLED AND COLD-ROLLED SHEETS

It is not practicable to produce hot-rolled and cold-rolled sheets to exact theoretical weight. Sheets of any one item of a specified thickness and size in any finish may be overweight to the following extent:

(*1*) An item of five sheets or less, or an item estimated to weigh 200 lb (90.7 kg) or less, may actually weigh as much as 10% over the theoretical weight.

(*2*) An item of more than five sheets and estimated to weigh more than 200 lb (90.7 kg) may actually weigh as much as 7½% over the theoretical weight.

(*3*) The underweight variations for sheets are limited by the under thickness tolerances shown in Table 3.

For determining theoretical weight the factor, 42 lb/ft^2· in. (0.0008 kg/cm^2 · mm) thickness may be used.

10.1.1 A lot for chemical analysis shall consist of one heat.

10.1.2 *Plate* — A lot of plate for testing and inspection purposes shall consist of the products resulting from the rolling of one heat of material in the same condition and specified thickness, solution annealed by the same practice, but in no case more than 25,000 lb (11,340 kg).

10.1.3 *Sheet and Strip* — A lot of sheet or strip for testing and inspection purposes shall consist of material from one heat in the same form (sheet or strip), condition, finish, and specified thickness, solution-annealed by the same practice but in no case more than 25,000 lb (11,340 kg).

10.2 *Sampling of Chemical Analysis:*

10.2.1 A representative sample shall be taken from each lot during pouring or subsequent processing.

10.2.2 Product analysis, if performed, shall be wholly the responsibility of the purchaser.

10.3 *Sampling for Mechanical Tests:*

10.3.1 A sample of the material to provide test specimens for mechanical tests shall be taken from such a location in each lot as to be representative of that lot.

10.3.2 When samples are to be taken after delivery, the purchaser of material ordered to cut lengths may request on the purchase order additional material of adequate size to provide sample coupons for inspection purposes.

TABLE 10
THICKNESS TOLERANCE[A, B, C] FOR COLD-ROLLED STRIP FOR THE THICKNESSES AND WIDTHS, GIVEN OVER AND UNDER

	Width, in.							
Specified Thickness	0.187 to 1, incl	Over 1 to 3, incl	Over 3 to 6, incl	Over 6 to 9, incl	Over 9 to 12, incl	Over 12 to 16, incl	Over 16 to 20, incl	Over 20 to 24, incl
	Thickness Tolerance, in.							
Over 0.160 to less than 0.187	0.002	0.003	0.004	0.004	0.004	0.005	0.006	0.006
Over 0.099 to 0.160, incl	0.002	0.002	0.003	0.003	0.004	0.004	0.005	0.005
Over 0.068 to 0.099, incl	0.002	0.002	0.003	0.003	0.003	0.004	0.004	0.004
Over 0.049 to 0.068, incl	0.002	0.002	0.003	0.003	0.003	0.003	0.004	0.004
Over 0.039 to 0.049, incl	0.002	0.002	0.0025	0.003	0.003	0.003	0.004	0.004
Over 0.034 to 0.039, incl	0.002	0.002	0.0025	0.0025	0.003	0.003	0.003	0.003
Over 0.028 to 0.034, incl	0.0015	0.0015	0.002	0.002	0.0025	0.0025	0.003	0.003
Over 0.025 to 0.028, incl	0.001	0.0015	0.0015	0.002	0.002	0.002	0.0025	0.003
Over 0.019 to 0.025, incl	0.001	0.001	0.0015	0.0015	0.002	0.002	0.0025	0.0025
Over 0.016 to 0.019, incl	0.001	0.001	0.001	0.0015	0.0015	0.002	0.002	0.002
Over 0.012 to 0.016, incl	0.001	0.001	0.001	0.001	0.0015	0.0015	0.002	0.002
Over 0.011 to 0.012, incl	0.001	0.001	0.001	0.001	0.0015	0.0015	0.0015	0.0015
Over 0.010 to 0.011, incl	0.001	0.001	0.001	0.001	0.001	0.0015	0.0015	0.0015
0.010	0.001	0.001	0.001	0.001	0.001	0.001	0.0015	0.0015
	Width, mm							
Specified Thickness, mm	4.76 to 25.4, incl	Over 25.4 to 76.2, incl	Over 76.2 to 152.4, incl	Over 152.4 to 228.6, incl	Over 228.6 to 304.8, incl	Over 304.8 to 406.4, incl	Over 406.4 to 508, incl	Over 508 to 609.6, incl
	Thickness Tolerance, mm							
Over 4.06 to less than 4.76	0.05	0.08	0.10	0.10	0.10	0.13	0.15	0.15
Over 2.51 to 4.06, incl	0.05	0.05	0.08	0.08	0.10	0.10	0.13	0.13
Over 1.73 to 2.51, incl	0.05	0.05	0.08	0.08	0.08	0.10	0.10	0.10
Over 1.25 to 1.73, incl	0.05	0.05	0.08	0.08	0.08	0.08	0.10	0.10
Over 0.99 to 1.24, incl	0.05	0.05	0.06	0.08	0.08	0.08	0.10	0.10
Over 0.86 to 0.99, incl	0.05	0.05	0.06	0.06	0.08	0.08	0.08	0.08
Over 0.71 to 0.86, incl	0.04	0.04	0.05	0.05	0.06	0.06	0.08	0.08
Over 0.64 to 0.71, incl	0.02	0.04	0.04	0.05	0.05	0.05	0.06	0.08
Over 0.48 to 0.64, incl	0.02	0.02	0.04	0.04	0.05	0.05	0.06	0.06
Over 0.41 to 0.48, incl	0.02	0.02	0.02	0.04	0.04	0.05	0.05	0.05
Over 0.38 to 0.41, incl	0.02	0.02	0.02	0.02	0.04	0.04	0.05	0.05
Over 0.28 to 0.30, incl	0.02	0.02	0.02	0.02	0.04	0.04	0.04	0.04
Over 0.25 to 0.28, incl	0.02	0.02	0.02	0.02	0.02	0.04	0.04	0.04
0.25	0.02	0.02	0.02	0.02	0.02	0.02	0.04	0.04

[A] For thickness under 0.010 to 0.005 in. (0.254 to 0.127 mm), inclusive, in widths up to and including 16 in. (406 mm), a tolerance of ±10% of the thickness applies. For thicknesses under 0.010 to 0.005 in. (0.254 to 0.127 mm), inclusive, in widths over 16 to 24 in. (406 to 610 mm), exclusive, a tolerance of ±15% of the thickness applies. For thickness tolerances on thicknesses under 0.005 in. (0.127 mm) in widths up to 24 in. (610 mm), exclusive, the producer should be consulted.

[B] Thickness measurements are taken $\frac{3}{8}$ in. (9.5 mm) in from the edge of the strip, except that on widths less than 1 in. (25.4 mm) the tolerances are applicable for measurements at all locations.

[C] The tolerances in this table do not include crown tolerances.

11. Number of Tests and Retests

11.1 In the case of sheet or strip supplied in coil form, two or more tension tests (one from each end of each coil), and one or more hardness tests shall be made on specimens taken from each end of the coil. When material is supplied in flatsheet, flat strip, or plate, one tension and one or more hardness tests shall be made on each 100 or less sheets, strips, or plates of the same lot. When specified, one corrosion test shall be conducted for each lot.

11.2 If any specimens selected to represent any lot fail to meet any of the test requirements, the material represented by such specimens may be retested. If there

TABLE 11
CROWN TOLERANCES FOR COLD-ROLLED STRIP

Specified Thickness, in. (mm)	Additional Thickness, at Middle of Strip over That Shown in Table 10 for Edge Measurement, for Widths and Thicknesses Given, in. (mm)		
	Width, in. (mm)		
	To 5 (127), incl	Over 5 to 12 (127 to 305), incl	Over 12 to 24 (305 to 610), excl
0.005 to 0.010 (0.127 to 0.254), incl	0.0075 (0.19)	0.001 (0.02)	0.0015 (0.04)
Over 0.010 to 0.025 (0.254 to 0.635), incl	0.001 (0.02)	0.0015 (0.04)	0.002 (0.05)
Over 0.025 to 0.065 (0.635 to 1.65), incl	0.0015 (0.04)	0.002 (0.05)	0.0025 (0.06)
Over 0.065 to 0.187 (1.65 to 4.76), excl	0.002 (0.05)	0.0025 (0.06)	0.003 (0.08)

is valid reason to believe the result is not representative, the material may be re-reannealed and retested.

12. Specimen Preparation

12.1 Tension test specimens from material under ½ in. (12.7 mm) in thickness shall be of the full thickness of the material and machined to the form and dimensions shown for the sheet-type specimen in Methods E 8. Tension test specimens from material ½ in. (12.7 mm) and over shall be of the full thickness of the material, machined to the form and dimensions shown for the plate-type specimen in Test Methods E 8. Tension test specimens shall be taken from material after final heat treatment and shall be selected in the transverse direction unless prohibited by width.

13. Test Methods

13.1 Determine the chemical composition and properties of the material as enumerated in this specification, in case of disagreement, in accordance with the following methods:

Test	ASTM Designation
Chemical analysis	E 38, E 353[A, B]
Tension	E 8
Brinell hardness	E 10
Rockwell hardness	E 18
Hardness conversion	E 140
Rounding procedure	E 29
Method of sampling for product analysis	E 55

[A] Iron shall be determined arithmetically by difference.

[B] Methods E 38 are to be used only for elements not covered by Test Methods E 353.

13.2 For purpose of determining compliance with the limits in this specification, an observed value or a calculated value shall be rounded as indicated in accordance with the rounding method of Practice E 29.

Requirements	Rounded Unit for Observed or Calculated Value
Chemical composition hardness and tolerance (when expressed in decimals)	nearest unit in the last right-hand place of figures of the specified limit
Tensile strength and yield strength	nearest 1000 psi (7 MPa)
Elongation	nearest 1%

14. Inspection

14.1 Inspection of the material by the purchaser shall be made as agreed upon between the purchaser and the manufacturer as set forth in the purchase contract.

15. Rejection and Rehearing

15.1 Material that fails to conform to the requirements of this specification may be rejected. Rejection should be reported to the producer or supplier promptly and in writing. In case of dissatisfaction with the results of the test, the producer or supplier may make claim for a rehearing.

16. Certification

16.1 When specified in the purchase order or contract, a producer's or supplier's certification shall be furnished to the purchaser that the material was manufactured, sampled, tested, and inspected in accordance with this specification and has been found to meet the requirements. When specified in the purchase order or contract, a report of the test results shall be furnished.

17. Product Marking

17.1 Each piece (plate, sheet, strip, or coil) shall be marked legibly with the specification number, UNS number, heat number and the name of the manufacturer. When specified, marking shall be by die stamping on plates ¼ in. (6.35 mm) or thicker.

TABLE 12
WIDTH TOLERANCES FOR COLD-ROLLED STRIP ON EDGE NOS. 1, 5, AND 3

Edge Nos. 1 and 5

Specified Edge No.	Width, in.	Thickness, in.	Width Tolerance for Thickness and Width Given, in. Over	Under
1 and 5	9/32 and under	1/16 and under	0.005	0.005
1 and 5	over 9/32 and 3/4, incl	3/32 and under	0.005	0.005
1 and 5	over 3/4 to 5, incl	1/8 and under	0.005	0.005
5	over 5 to 9, incl	1/8 to 0.008, incl	0.010	0.010
5	over 9 to 20, incl	0.105 to 0.015	0.010	0.010
5	over 20 to 23 15/16, incl	0.080 to 0.023	0.015	0.015

Edge No. 3

Specified Thickness, in.	Width Tolerance for Thickness and Width Given, Over and Under, in. Under 1/2 to 3/16, incl	1/2 to 6, incl	Over 6 to 9, incl	Over 9 to 12, incl	Over 12 to 21, incl	Over 21 to 24, incl
Under 0.187 to 0.161, incl	...	0.016	0.020	0.020	0.031	0.031
0.160 to 0.100, incl	0.010	0.010	0.016	0.016	0.020	0.020
0.099 to 0.069, incl	0.008	0.008	0.010	0.010	0.016	0.020
0.068 and under	0.005	0.005	0.005	0.010	0.016	0.020

Edge Nos. 1 and 5

Specified Edge No.	Width, mm	Thickness, mm	Width Tolerance for Thickness and Width Given, mm Over	Under
1 and 5	7.1 and under	1.6 and under	0.13	0.13
1 and 5	Over 7.1 to 19.0, incl	2.4 and under	0.13	0.13
1 and 5	Over 19.0 to 127	3.2 and under	0.13	0.13
5	Over 127 to 229	3.2 to 0.203, incl	0.25	0.25
5	Over 229 to 508	2.7 to 0.381, incl	0.25	0.25
5	Over 508 to 608	2.0 to 0.584, incl	0.38	0.38

Edge No. 3

Specified Thickness, mm	Width Tolerance for Thickness and Width Given, Over and Under, mm Under 12.7 to 4.76, incl	12.7 to 152, incl	Over 152 to 229, incl	Over 229 to 305, incl	Over 305 to 533, incl	Over 533 to 610, excl
Under 4.76 to 4.09, incl	...	0.41	0.51	0.51	0.79	0.79
4.06 to 2.54, incl	0.25	0.25	0.41	0.41	0.51	0.51
2.51 to 1.75, incl	0.20	0.20	0.25	0.25	0.41	0.51
1.73 and under	0.13	0.13	0.13	0.25	0.41	0.51

TABLE 13
LENGTH AND CAMBER[A] TOLERANCES FOR COLD-ROLLED STRIP

Length Tolerances	
Specified Length, ft (mm)	Tolerance Over Specified Length (No Under Tolerance), in. (mm)
To 5 (1524), incl	3/8 (9.5)
Over 5 to 10 (1520 to 3050), incl	1/2 (12.7)
Over 10 to 20 (3050 to 6100), incl	5/8 (15.9)
Camber Tolerances	
Specified Width, in. (mm)	Tolerance per Unit Length of any 8 ft (2440 mm), in. (mm)
To 1 1/2 (38.1), incl	1/2 (12.7)
Over 1 1/2 to 24 (38.1 to 610), excl	1/4 (6.4)

[A] Camber is the deviation of a side edge from a straight line, and measurement is taken by placing an 8-ft straight-edge on the concave side and measuring the greatest distance between the strip edge and the straightedge.

TABLE 14
THICKNESS[A] TOLERANCES ON PLATES[B, C]

	Width, in. (mm) Tolerance Over Specified Thickness, in. (mm)			
Specified Thickness, in. (mm)	To 84 (2134), incl	Over 84 to 120 (2134 to 3048), incl	Over 120 to 144 (3048 to 3658), incl	Over 144 (3658)
3/16 to 3/8 (4.76 to 9.53), excl	0.046 (1.17)	0.050 (1.27)	0.0	
3/8 to 3/4 (9.53 to 19.05), excl	0.054 (1.37)	0.058 (1.47)	0.075 (1.91)	0.090 (2.28)
3/4 to 1 (19.05 to 25.4), excl	0.060 (1.52)	0.064 (1.63)	0.083 (2.11)	0.100 (2.54)
1 to 2 (25.4 to 50.8), incl	0.070 (1.78)	0.074 (1.88)	0.095 (2.41)	0.115 (2.92)

[A] Thickness is measured along the longitudinal edges of the plate at least 3/8 in. (9.53 mm) from the edge.

[B] For circles, the above over-thickness tolerances apply to the diameter of the circle corresponding to the width ranges shown. For plates of irregular shape, the above over-thickness tolerances apply to the greatest width corresponding to the width ranges shown.

[C] For plates up to 2 in. (50.8 mm), incl, in thickness, the tolerance under specified thickness is 0.01 in. (0.254 mm).

TABLE 15
WIDTH AND LENGTH TOLERANCES FOR PLATES [A, B]

		Tolerance over Specified Width and Length for Given Width, Length and Thickness, in.					
		Under 3/8 in.		3/8 to 1/2, incl, in Thickness		Over 1/2 in Thickness	
Width, in.	Length, in.	Width	Length	Width	Length	Width	Length
48 and under	144 and under	1/8	3/16	3/16	1/4	5/16	3/8
Over 48 to 60, incl		3/16	1/4	1/4	5/16	3/8	7/16
Over 60 to 84, incl		1/4	5/16	5/16	3/8	7/16	1/2
Over 84 to 108, incl		5/16	3/8	3/8	7/16	1/2	9/16
Over 108		3/8	7/16	7/16	1/2	5/8	11/16
48 and under	over 144 to 240	3/16	3/8	1/4	1/2	5/16	5/8
Over 48 to 60, incl		1/4	7/16	5/16	5/8	3/8	3/4
Over 60 to 84, incl		3/8	1/2	7/16	11/16	1/2	3/4
Over 84 to 108, incl		7/16	9/16	1/2	3/4	5/8	7/8
Over 108		1/2	5/8	5/8	7/8	11/16	1
48 and under	over 240 to 360	1/4	1/2	5/16	5/8	3/8	3/4
Over 48 to 60, incl		5/16	5/8	3/8	3/4	1/2	3/4
Over 60 to 84, incl		7/16	11/16	1/2	3/4	5/8	7/8
Over 84 to 108, incl		9/16	3/4	5/8	7/8	3/4	1
Over 108		5/8	7/8	11/16	1	7/8	1
60 and under	over 360 to 480	7/16	1 1/8	1/2	1 1/4	5/8	1 3/8
Over 60 to 84, incl		1/2	1 1/4	5/8	1 3/8	3/4	1 1/2
Over 84 to 108, incl		9/16	1 1/4	3/4	1 3/8	7/8	1 1/2
Over 108		3/4	1 3/8	7/8	1 1/2	1	1 5/8
60 and under	over 480 to 600	7/16	1 1/4	1/2	1 1/2	5/8	1 5/8
Over 60 to 84, incl		1/2	1 3/8	5/8	1 1/2	3/4	1 5/8
Over 84 to 108, incl		5/8	1 3/8	3/4	1 1/2	7/8	1 5/8
Over 108		3/4	1 1/2	7/8	1 5/8	1	1 3/4
60 and under	over 600	1/2	1 3/4	5/8	1 7/8	3/4	1 7/8
Over 60 to 84, incl		5/8	1 3/4	3/4	1 7/8	7/8	1 7/8
Over 84 to 108, incl		5/8	1 3/4	3/4	1 7/8	7/8	1 7/8
Over 108		7/8	1 3/4	1	2	1 1/8	2 1/4

		Tolerance over Specified Width and Length for Given Width, Length and Thickness, mm					
		Under 9.5 mm		9.5 to 12.7 mm, incl. in Thickness		Over 12.7 mm in Thickness	
Width, mm	Length, mm	Width	Length	Width	Length	Width	Length
1219 mm and under	3658 and under	3.2	4.8	4.8	6.4	7.9	9.5
Over 1219 to 1524, incl		4.8	6.4	6.4	7.9	9.5	11.1
Over 1524 to 2134, incl		6.4	7.9	7.9	9.5	11.1	12.7
Over 2134 to 2743, incl		7.9	9.5	9.5	11.1	12.7	14.3
Over 2743		9.5	11.1	11.1	12.7	15.9	17.5
1219 mm and under	over 3658 to 6096	4.8	9.5	6.4	12.7	7.9	15.9
Over 1219 to 1524, incl		6.4	11.1	7.9	15.9	9.5	19.1
Over 1524 to 2134		9.5	12.7	11.1	17.5	12.7	19.1
Over 2134 to 2743, incl		11.1	14.3	12.7	19.1	15.9	22.2
Over 2743		12.7	15.9	15.9	22.2	17.5	25.4

TABLE 15 (CONT'D)
WIDTH AND LENGTH TOLERANCES FOR PLATES [A, B]

Width, mm	Length, mm	Tolerance over Specified Width and Length for Given Width, Length and Thickness, mm					
		Under 9.5 mm		9.5 to 12.7 mm, incl. in Thickness		Over 12.7 mm in Thickness	
		Width	Length	Width	Length	Width	Length
1219 mm and under	over 6096 to 9144	6.4	12.7	7.9	15.9	9.5	19.1
Over 1219 to 1524, incl		7.9	15.9	9.5	19.1	12.7	19.1
Over 1524 to 2134		11.1	17.5	12.7	19.1	15.9	22.2
Over 2134 to 2743, incl		14.3	19.1	15.9	22.2	19.1	25.4
Over 2743		15.9	22.2	17.5	25.4	22.2	25.4
1524 mm and under	over 9144 to 12 192	11.1	28.6	12.7	31.8	15.9	34.9
Over 1524 to 2134, incl		12.7	31.8	15.9	34.9	19.1	38.1
Over 2134 to 2734, incl		14.3	31.8	19.1	34.9	22.2	38.1
Over 2743		19.1	34.9	22.2	38.1	25.4	41.3
1524 mm and under	over 12 192 to 15 240	11.1	31.8	12.7	38.1	15.9	41.3
Over 1524 to 2134, incl		12.7	34.9	15.9	38.1	19.1	41.3
Over 2134 to 2743, incl		15.9	34.9	19.1	38.1	22.2	41.3
Over 2743		19.1	38.1	22.2	41.3	25.4	44.5
1524 mm and under	over 15 240	12.7	44.5	15.9	47.6	19.1	47.6
Over 1524 to 2134, incl		15.9	44.5	19.1	47.6	22.2	47.6
Over 2134 to 2743, incl		15.9	44.5	19.1	47.6	22.2	47.6
Over 2743		22.2	44.5	25.4	50.8	28.6	57.2

[A] The tolerance under specified width and length is $\frac{1}{4}$ in. (6.35 mm).

[B] Rectangular plates over 1 in. (25.4 mm) in thickness are not commonly sheared and are machined or otherwise cut to length and width or produced in the size as rolled, uncropped.

TABLE 16
CAMBER TOLERANCE FOR PLATES

Maximum camber[A] = $\frac{1}{8}$ in. (3.2 mm) in any 5 ft (1524 mm)

[A] Camber is the deviation of a side edge from a straight line, and measurement is taken by placing a 5-ft (1524-mm) straightedge on the concave side and measuring the greatest distance between the plate and the straightedge.

TABLE 17
DIAMETER TOLERANCES FOR CIRCULAR PLATES

Specified Diameter, in. (mm)	Tolerance over specified Diameter for Given Diameter and Thickness (No Under Tolerance), in. (mm)		
	Thickness		
	To 0.375 (9.53), excl	0.375 to 0.625 (9.53 to 15.88), excl	0.625 (15.88) and over
To 60 (1524), excl	$\frac{1}{4}$ (6.4)	$\frac{3}{8}$ (9.5)	$\frac{1}{2}$ (12.7)
60 to 84 (1524 to 2134), excl	$\frac{5}{16}$ (7.9)	$\frac{7}{16}$ (11.1)	$\frac{9}{16}$ (14.3)
84 to 108 (2134 to 2743), excl	$\frac{3}{8}$ (9.5)	$\frac{1}{2}$ (12.7)	$\frac{5}{8}$ (15.9)
108 to 130 (2743 to 3302), excl	$\frac{7}{16}$ (11.1)	$\frac{9}{16}$ (14.3)	$\frac{11}{16}$ (17.5)

TABLE 18
FLATNESS TOLERANCES FOR PLATES

Specified Thickness, in.	Flatness Tolerance (Deviation from a Flat Horizontal Surface) for Thickness and Width Given, in.								
	Width, in.								
	48 and Under	Over 48 to 60, excl	60 to 72, excl	72 to 84, excl	84 to 96, excl	96 to 108, excl	108 to 120, excl	120 to 144, excl	144 and Over
3/16 to 1/4, excl	3/4	1 1/16	1 1/4	1 3/8	1 5/8	1 5/8	1 7/8	2	
1/4 to 3/8, excl	11/16	3/4	15/16	1 1/8	1 3/8	1 7/16	1 9/16	1 7/8	1 3/4
3/8 to 1/2, excl	1/2	9/16	11/16	3/4	15/16	1 1/8	1 1/4	1 7/16	1 3/8
1/2 to 3/4, excl	1/2	9/16	5/8	5/8	13/16	1 1/8	1 1/8	1 1/8	1
3/4 to 1, excl	1/2	9/16	5/8	5/8	3/4	13/16	15/16	1	7/8
1 to 1 1/2, excl	1/2	9/16	9/16	9/16	11/16	11/16	11/16	3/4	1 1/8
1 1/2 to 4, excl	3/16	5/16	3/8	7/16	1/2	9/16	5/8	3/4	
4 to 6, excl	1/4	3/8	1/2	9/16	5/8	3/4	7/8	1	

Specified Thickness, mm	Flatness Tolerance (Deviation from a Flat Horizontal Surface) for Thickness and Width Given, mm								
	Width, mm								
	1219 and Under	Over 1219 to 1524, excl	1524 to 1829, excl	1829 to 2134, excl	2134 to 2438, excl	2438 to 2743, excl	2743 to 3048, excl	3048 to 3658, excl	3658 and Over
4.76 to 6.35, excl	19.1	27.0	31.8	34.9	41.3	41.3	47.6	50.8	...
6.35 to 9.53, excl	17.5	19.1	23.8	28.6	34.9	36.5	39.7	47.6	...
9.53 to 12.7, excl	12.7	14.3	17.5	19.1	23.8	28.6	31.8	36.5	44.5
12.7 to 19.05, excl	12.7	14.3	15.9	15.9	20.6	28.6	28.6	28.6	34.9
19.05 to 25.4, excl	12.7	14.3	15.9	15.9	19.1	20.6	23.8	25.4	28.6
25.4 to 38.1, excl	12.7	14.3	14.3	14.3	17.5	17.5	17.5	19.1	25.4
38.1 to 102, excl	4.8	7.9	9.5	11.1	12.7	14.3	15.9	19.1	22.2
102 to 152, excl	6.4	9.5	12.7	14.3	15.9	19.1	22.2	25.4	28.6

TABLE 19
RECOMMENDED PLATE FLAME-CUTTING TOLERANCES TO CLEAN UP IN MACHINING

Specified Thickness, in. (mm)	Machining Allowance per Edge, in. (mm)
2 (51) under	1/4 (6.4)
Over 2 to 3 (51 to 76), incl	3/8 (9.5)
Over 3 to 6 (76 to 152), incl	1/2 (12.7)

TABLE 20
ABRASIVE-CUTTING WIDTH AND LENGTH TOLERANCES

Specified Thickness, in. (mm)	Tolerance Over[A] Specified Width and Length, in. (mm)	
	Width	Length
Up to 1 1/4 (32)	1/8 (3.2)	1/8 (3.2)
Over 1 1/4 to 2 3/4 (32 to 70)	3/16 (4.8)	3/16 (4.8)

[A] The tolerance under the specified width and length is 1/8 in. (3.2 mm).

SPECIFICATION FOR NICKEL-IRON-CHROMIUM-SILICON ALLOY WELDED PIPE

SB-710

(Identical with ASTM Specification B 710-99 except that certification has been made mandatory.)

1. Scope

1.1 This specification covers alloy UNS N08330 and UNS N08332 in the form of welded pipe intended for heat-resisting applications and general-corrosive service. See Tables 1 and 2.

1.2 The pipe covered is nominal pipe sizes up to and including size 12, with the nominal wall thicknesses given as Schedules 5S, 10S, 40S, and 80S. Table 2 of Specification B 775 is based on Table A1 of ANSI B36.19 and gives the nominal dimension of these sizes. Table 3 of Specification B 775 lists the dimensional requirements of these sizes. Pipe having other dimensions may be furnished provided such pipe complies with all other requirements of this specification.

1.3 The values stated in inch-pound units are to be regarded as the standard. The values given in parentheses are for information only.

2. Referenced Documents

2.1 *ASTM Standards:*

B 536 Specification for Nickel-Iron-Chromium-Silicon Alloy (UNS N08330 and N08332) Plate, Sheet, and Strip

B 775 Specification for General Requirements for Nickel and Nickel Alloy Welded Pipe

2.2 *ANSI Standard:*

ANSI B36.19 Stainless Steel Pipe

3. General Requirement

3.1 Material furnished in accordance with this specification shall conform to the applicable requirements of the current edition of Specification B 775 unless otherwise provided herein.

4. Ordering Information

4.1 It is the responsibility of the purchaser to specify all requirements that are necessary for the safe and satisfactory performance of material ordered under this specification. Examples of such requirements include, but are not limited to, the following:

4.1.1 Quantity (feet or number of lengths),

4.1.2 UNS number,

4.1.3 Size (nominal pipe size and schedule),

4.1.4 Length (random or specific),

4.1.5 ASTM designation,

4.1.6 *Product Analysis* — State if required.

4.1.7 *Certification* — Certification and a report of test results are required (Section 9),

4.1.8 *Purchaser Inspection* — State which tests or inspections are to be witnessed, if any, and

4.1.9 Supplementary requirements, if any.

5. Materials and Manufacture

5.1 The pipe shall be made from flat-rolled alloy conforming to Specification B 536, by an automatic welding process with no addition of filler metal. Subsequent to welding and prior to final heat treamtent, the material shall be cold worked either in both weld and base metal or in weld metal only.

5.2 *Heat Treatment* — Pipe of UNS N08330 alloy shall be annealed at 1900°F (1040°C), minimum. Pipe of UNS N08332 alloy shall be annealed at 2100°F (1150°C), minimum.

6. Chemical Composition

6.1 The material shall conform to the composition limits specified in Table 1. One test is required for each lot as defined in Specification B 775.

6.2 If a product analysis is performed, it shall meet the chemistry limits prescribed in Table 1, subject to the analysis tolerances specified in Table 1 of Specification B 775.

7. Mechanical Properties and Other Requirements

7.1 *Mechanical Properties* — The material shall conform to the mechanical property requirements specified in Table 2. One test is required for each lot as defined in Specification B 775.

7.2 *Flattening Test* — A flattening test shall be made on each end of one pipe per lot. Superficial ruptures resulting from surface imperfections shall not be cause for rejection.

7.3 *Nondestructive Test Requirements* — Each pipe shall be subjected to either a pressure test or a nondestructive electric test at the manufacturer's option. The purchaser may specify which test is to be used.

7.4 *Grain Size* — Annealed alloy UNS N08332 shall conform to an average grain size of ASTM No. 5 or coarser.

8. Lengths

8.1 Lengths may be ordered as either random lengths [normally 15 to 24 ft (4.6 to 7.3 m), with some agreed upon allowance for shorts] or specific cut lengths.

TABLE 1
CHEMICAL REQUIREMENTS

Element	Composition Limits, %
C	. . .[A]
Mn	2.00 max
P	0.03 max
S	0.03 max
Si	0.75–1.50
Cr	17.0–20.0
Ni	34.0–37.0
Cu	1.00 max
Pb	0.005 max
Sn	0.025 max
Fe	Remainder[B]

[A] Alloy UNS N08330: 0.08 max. Alloy UNS N08332; 0.05–0.10.
[B] Element shall be determined arithmetically by difference.

9. Certification

9.1 A manufacturer's certification shall be furnished to the purchaser stating that the material has been manufactured, tested, and inspected in accordance with this specification, and that the test results on representative samples meet specification requirements. A report of the test results shall be furnished.

10. Keywords

10.1 high-temperature alloy; welded pipe

TABLE 2
MECHANICAL PROPERTIES

Alloy	Condition	Tensile Strength, min, psi (MPa)	Yield Strength, 0.2% offset, min, psi (MPa)	Elongation in 2 in. or 50 mm, or 4*D*, min, %	Hardness[A]
UNS N08330	annealed	70 000 (483)	30 000 (207)	30	70 to 90 HRB
UNS N08332	annealed	67 000 (462)	27 000 (186)	30	65 to 88 HRB

[A] Hardness values are informative only and not to be construed as the basis for acceptance.

SPECIFICATION FOR SEAMLESS UNS N08020, UNS N08026, AND UNS N08024 NICKEL-ALLOY PIPE AND TUBE

SB-729

(Identical with ASTM Specification B 729-99 except that certification has been made mandatory.)

1. Scope

1.1 This specification covers UNS N08020, UNS N08026, and UNS N08024 seamless, cold-worked or hot-finished pipe and tube intended for general corrosive service.

1.2 The values stated in inch-pound units are to be regarded as the standard. The values given in parentheses are for information only.

1.3 The following safety hazards caveat pertains only to the test methods portion, Section 10, of this specification: *This standard does not purport to address all of the safety concerns, if any, associated with its use. It is the responsibility of the user of this standard to establish appropriate safety and health practices and determine the applicability of regulatory limitations prior to use.*

2. Referenced Documents

2.1 *ASTM Standards:*

B 829 Specification for General Requirements for Nickel and Nickel Alloys Seamless Pipe and Tube

E 8 Test Methods for Tension Testing of Metallic Materials

3. General Requirement

3.1 Material furnished under this specification shall conform to the applicable requirements of Specification B 829 unless otherwise provided herein.

4. Ordering Information

4.1 Orders for materials under this specification shall include the following information:

4.1.1 Alloy name or UNS number.

4.1.2 ASTM designation and year of issue.

4.1.3 Finish.

4.1.4 *Dimensions:*

4.1.4.1 *Tube* — Specify outside diameter and the average or minimum wall thickness.

4.1.4.2 *Pipe* — Standard pipe size and schedule.

4.1.4.3 *Length,* (cut to length or random).

4.1.5 Quantity (feet or number of pieces).

4.1.6 *Nondestructive Testing* (see 7.2):

4.1.6.1 *Pressure Requirements* — Test pressure if other than required by 10.1.

4.1.6.2 Specify if an electric test is to be performed (see 7.2).

4.1.7 *Ends* — Plain ends cut and deburred will be furnished. If threaded ends or ends beveled for welding are desired, give details.

4.1.8 *Certification* — Certification is required (Section 11).

4.1.9 *Samples for Product (Check) Analysis* — State whether samples for product (check) analysis should be furnished (see 6.2).

4.1.10 *Purchaser Inspection* — If the purchaser wishes to witness tests or inspection of material at the place of manufacture, the purchase order must so state, indicating which tests or inspections are to be witnessed.

5. Materials and Manufacture

5.1 The product of UNS N08020 alloy shall be furnished in the stabilized-annealed condition. The product

TABLE 1
CHEMICAL REQUIREMENTS

Element	Composition, %		
	UNS N08026	UNS N08020	UNS N08024
Carbon, max	0.03	0.07	0.03
Manganese, max	1.00	2.00	1.00
Phosphorus, max	0.03	0.045	0.035
Sulfur, max	0.03	0.035	0.035
Silicon, max	0.50	1.00	0.50
Nickel	33.00–37.20	32.00–38.00	35.00–40.00
Chromium	22.00–26.00	19.00–21.00	22.50–25.00
Molybdenum	5.00–6.70	2.00–3.00	3.50–5.00
Copper	2.00–4.00	3.00–4.00	0.50–1.50
Columbium (Nb) + tantalum	...	8 × carbon–1.00	0.15–0.35
Nitrogen	0.10–0.16	...	...
Iron	remainder[A]	remainder[A]	remainder[A]

[A] By difference.

TABLE 2
MECHANICAL PROPERTY REQUIREMENTS

Tensile Strength, min		Yield Strength,[A] min		Elongation in 2 in. (50.8 mm) or 4*D* min, %
ksi	MPa	ksi	MPa	
80	550	35	240	30.0

[A] Yield strength shall be determined by the offset method at 0.2% limiting permanent set in accordance with Test Methods E 8.

of UNS N08026 alloy shall be furnished in the solution-annealed condition. The product of UNS N08024 alloy shall be furnished in the annealed condition.

NOTE 1 — The recommended annealing temperatures all followed by quenching in water or rapidly cooling by other means are as follows: 1800 to 1850°F (982 to 1010°C) for UNS N08020, 2050 to 2200°F (1121 to 1204°C) for UNS N08026, and 1925 to 1975°F (1052 to 1079°C) for UNS N08024.

6. Chemical Composition

6.1 The material shall conform to the composition limits specified in Table 1. One test is required for each lot as defined in Specification B 829.

6.2 If a product analysis is performed by the purchaser, the material shall conform to the composition limits specified in Table 1 subject to the product analysis tolerances specified in Table 1 of Specification B 829.

7. Mechanical and Other Properties

7.1 *Mechanical Properties* — The material shall conform to the mechanical property requirements specified in Table 2.

7.2 *Pressure and Nondestructive Electric Test* — Each pipe and tube shall be subjected to either a pressure test or the nondestructive electric test at the manufacturer's option. The purchaser may specify which test is to be used.

7.2.1 Any leaking areas may be cut out and the pipe retested as above.

7.2.2 Test signals produced by imperfections such as the following, may be judged as injurious or noninjurious, depending on visual observation of their severity or the type of signal they produce on the testing equipment used, or both.

7.2.2.1 Dinges,

7.2.2.2 Straightener marks,

7.2.2.3 Scratches,

7.2.2.4 Steel die stamps, and

7.2.2.5 Stop marks.

8. Sampling

8.1 *Product (Check) Analysis* shall be wholly the responsibility of the purchaser.

9. Number of Tests

9.1 *Chemical Analysis* — One test per lot.

9.2 *Mechanical Properties* — One test per lot.

9.3 *Nondestructive Test* — Each piece in each lot.

10. Test Methods

10.1 *Hydrostatic Test:*

10.1.1 Each pipe or tube shall be hydrostatically tested, at a pressure not to exceed 2500 psi (17 MPa) for

nominal sizes 3 in. (76 mm) and under, nor 2800 psi (19 MPa) for all nominal sizes over 3 in. (76 mm). The allowable fiber stress for material in the condition (temper) furnished is 20 000 psi (138 MPa).

10.1.2 Visual examination is to be made when the material is under pressure. The full length of material must be examined for leaks.

10.1.3 When so agreed upon between the manufacturer and the purchaser, pipe or tube may be tested to one and one-half times the allowable fiber stress given in 10.1.1.

11. Certification

11.1 A manufacturer's certification shall be furnished to the purchaser stating that the material has been manufactured, tested, and inspected in accordance with this specification, and that the test results on representative samples meet specification requirements. A report of the test results shall be furnished.

12. Keywords

12.1 nickel-iron-chromium-molybdenum-copper-columbium; seamless pipe; seamless tube; UNS N08020; UNS N08024; UNS N08026

SPECIFICATION FOR GENERAL REQUIREMENTS FOR NICKEL AND NICKEL-ALLOY SEAMLESS AND WELDED TUBE

SB-751

(Identical with ASTM Specification B 751-90.)

1. Scope

1.1 This specification contains various requirements that, with the exception of Sections 4 and 7, are mandatory requirements to the following ASTM nickel and nickel alloy, seamless and longitudinally welded tubular product specifications:

Title of Specification	ASTM Designation
Nickel Seamless Pipe and Tube	B 161
Seamless Nickel and Nickel Alloy Condenser Heat-Exchanger Tubes	B 163
Nickel-Copper Alloy (UNS N04400) Seamless Pipe and Tube	B 165
Nickel-Chromium-Iron Alloys (UNS N06600, N06601, and N06690) Seamless Pipe and Tube	B 167
Nickel-Iron-Chromium Alloy Seamless Pipe and Tube	B 407
Nickel-Iron-Chromium-Molybdenum-Copper Alloy (UNS N08825 and N08221) Seamless Pipe and Tube	B 423
Nickel-Chromium-Molybdenum-Columbium Alloys (UNS N06625) Pipe and Tube	B 444
Nickel-Chromium-Iron-Columbium-Molybdenum-Tungsten Alloy (UNS N06102) Seamless Pipe and Tube	B 445
Welded UNS N08020, UNS N08026, and UNS N08024) Alloy Tubes	B 468
Welded Nickel-Iron-Chromium Alloy (UNS N08800) Tubes	B 515
Welded Nickel-Iron-Chromium Alloy (UNS N08800) Tubes	B 516
Copper-Beryllium Alloy Forgings and Extrusions	B 570
Seamless Nickel and Nickel-Cobalt Alloy Pipe and Tube	B 622
Welded Nickel and Nickel-Cobalt Alloy Tube	B 626
UNS N08028 Seamless Tubes	B 668
UNS N08904 and N08925 Welded Tube	B 674
UNS N08366 and UNS N08367 Welded Tube	B 676
UNS N08904 and UNS N08925 Seamless Pipe and Tube	B 677
Iron-Nickel-Chromium-Molybdenum Alloys (UNS N08366 and UNS N08367) Seamless Pipe and Tube	B 690
Nickel-Alloy (UNS N06625 and N08825) Welded Tube	B 704
Ni-Cr-Mo-Co-W-Fe-Si Alloy (UNS N06333) Seamless Pipe and Tube	B 722
Ni-Cr-Mo-Co-W-Fe-Si Alloy (UNS N06333) Welded Tube	B 726
Seamless UNS N08020, UNS N08026, and UNS N08024 Nickel-Alloy Pipe and Tube	B 729
Welded Nickel Tube	B 730

1.2 One or more of the test requirements of Section 4 apply only if specifically stated in the product specification or in the purchase order.

1.3 In case of conflict between a requirement of the product specification and a requirement of this general specification, only the requirement of the product specification need be satisfied.

1.4 The values stated in inch-pound units are to be regarded as the standard. The values given in parentheses are for information only.

2. Referenced Documents

2.1 *ASTM Standards:*

E 8 Test Methods of Tension Testing of Metallic Materials
E 18 Test Methods for Rockwell Hardness and Rockwell Superficial Hardness of Metallic Materials
E 29 Practice for Using Significant Digits in Test Data to Determine Conformance With Specifications
E 38 Methods for Chemical Analysis of Nickel-Chromium and Nickel-Chromium-Iron Alloys
E 39 Methods for Chemical Analysis of Nickel
E 76 Methods for Chemical Analysis of Nickel-Copper Alloys
E 112 Test Methods for Determining Average Grain Size
E 213 Practice for Ultrasonic Examination of Metal Pipe and Tubing
E 354 Test Methods for Chemical Analysis of High Temperature Electrical, Magnetic, and Other Similar Iron, Nickel, and Cobalt Alloys
E 426 Practice for Electromagnetic (Eddy-Current) Examination of Seamless and Welded Tubular Products, Austenitic Stainless Steel and Similar Alloys
E 571 Practice for Electromagnetic (Eddy-Current) Examination of Nickel and Nickel Alloy Tubular Products

3. Terminology

3.1 *Definitions*

3.1.1 *average diameter* — the average of the maximum and minimum outside diameters, as determined at any one cross section of the pipe or tube.

3.1.2 *nominal wall* — a specified wall thickness with a plus or minus tolerance from the specified thickness.

3.1.3 *seamless tube* — a tube produced with a continuous periphery in all stages of the operation.

3.1.4 *thin wall tube* — tube with specified wall thickness 3% or less of the specified outside diameter.

3.1.5 *welded tube* — a hollow product of round or any other cross section having a continuous periphery.

4. Test Requirements

4.1 *Flange Test:*

4.1.1 A length of tube not less than three times the specified diameter or 4 in. (102 mm), whichever is longer, shall be capable of having a flange turned over at a right angle to the body of the tube without cracking or showing imperfections rejectable under the provisions of the product specification. The width of the flange shall not be less than 15% of the tube diameter.

4.1.2 The flanged specimen shall not exhibit through wall cracking or any cracking observable without magnification.

4.2 *Flattening Test:*

4.2.1 A length of tube not less than three times the specified diameter or 4 in. (102 mm), whichever is longer, shall be flattened under a load applied gradually at room temperature until the distance between the platens is five times the wall thickness. The weld shall be positioned 90 deg. from the direction of the applied flattening force.

4.2.2 The flattened specimen shall not exhibit cracks.

4.3 *Flare Test* — The flare test shall consist of flaring a test specimen with an expanding tool having an included angle of 60 deg. until the specified outside diameter has been increased by 30%. The flared specimen shall not exhibit cracking through the wall.

4.4 *Pressure (Leak Test):*

4.4.1 *Hydrostatic* — Each tube with an outside diameter $\frac{1}{8}$ in. (3 mm) and larger, and with wall thickness of 0.015 in. (0.38 mm) and over, shall be tested by the manufacturer to an internal hydrostatic pressure of 1000 psi (6.9 MPa) provided that the fiber stress calculated from the following equation does not exceedthe allowable fiber stress, S, indicated as follows:

$$P = 2ST/D$$

where:

P = hydrostatic test pressure, psi (MPa),
S = allowable fiber stresses, for material in the condition (temper) furnished as specified in the product specification (S is calculated as the lower of $\frac{2}{3}$ of the specified minimum 0.2% offset yield strength or $\frac{1}{4}$ of the specified minimum ultimate strength for the material),
T = minimum wall thickness, in. (mm), equal to the specified average wall minus the permissible minus wall tolerance, or the specified minimum wall thickness, and
D = outside diameter of the pipe or tube, in. (mm)

4.4.1.1 The test pressure must be held for a minimum of 5 s.

NOTE 1 — Testing at a pressure greater than 1000 psi can be done as agreed upon by the purchaser and manufacturer provided that the allowable fiber stress is not exceeded.

4.4.2 *Pneumatic (Air Underwater) Test* — Each tube shall be tested at a pressure of 150 psi (1.05 MPa). The test pressure shall be held for a minimum of 5 s. Visual examination is to be made when the material is

submerged and under pressure. The full length of material must be examined for leaks.

4.4.3 If any pipe or tube shows leaks during hydrostatic or pneumatic testing, it shall be rejected.

4.5 *Nondestructive Electric Test:*

4.5.1 *Eddy-Current Testing* — Testing shall be conducted in accordance with Practice E 426 or E 571. The eddy-current examination referenced in this specification has the capability of detecting significant discontinuities, especially of the short abrupt type.

4.5.1.1 Unless otherwise specified the calibration standard shall contain, at the option of the manufacturer, any one of the following discontinuities to establish a minimum sensitivity level for rejection. The discontinuity shall be placed in the weld if visible.

4.5.1.2 *Drilled Hole* — A hole not larger than 0.031 in. (0.79 mm) in diameter shall be drilled radially and completely through the wall, care being taken to avoid distortion of the material while drilling.

4.5.1.3 *Transverse Tangential Notch* — Using a round file or tool with a $\frac{1}{4}$ in. (6 mm) diameter, a notch shall be filed or milled on the tube outside diameter tangential to the surface and transverse to the longitudinal axis of the material. Said notch shall have a depth not exceeding $12\frac{1}{2}$ of the specified wall thickness of the material, or 0.004 in. (0.10 mm), whichever is greater.

4.5.2 *Ultrasonic Testing:*

4.5.2.1 Testing shall be conducted in accordance with Practice E 213. The ultrasonic examination referred to in this specification is intended to detect longitudinal discontinuities having a reflective area similar to or larger than the calibration reference notches specified in 4.5.2.2. The examination may not detect circumferentially oriented imperfections or short, deep defects.

4.5.2.2 For ultrasonic testing, a longitudinal calibration notch shall be machined on the outside and inside diameter surface. The depth of the notch shall not exceed $12\frac{1}{2}\%$ of the specified wall thickness or 0.004 in. (0.10 mm), whichever is greater. The notch shall be placed in the weld if visible.

4.5.2.3 *Calibration Frequency* — The frequency of calibration checks shall be as follows:

(a) At the beginning of each production run or log.

(b) After every four h or less during testing.

(c) At the end of each production run or lot.

(d) At any time malfunctioning is suspected, or the equipment has been left unattended.

(e) If, during any check, the equipment fails to pick up the standard defects in the calibration standard, the instrument test must be recalibrated and all material tested since the last satisfactory check shall be reexamined.

4.5.3 *Acceptance and Rejection* — Material producing a signal equal to or greater than the calibration imperfection shall be subject to rejection.

4.5.3.1 Test signals produced by imperfections that cannot be identified or produced by cracks or crack-like imperfections shall result in rejection of the tube, subject to rework, and retest.

4.5.3.2 If the imperfection is judged as not fit for use, the tube shall be rejected, but may be reconditioned and retested providing the dimensions requirements are met. To be accepted, retested material shall meet the original electric test requirements.

4.5.3.3 If the imperfection is explored to the extent that it can be identified and the pipe or tube is determined to be fit for use, the material may be accepted without further test providing the imperfection does not encroach on minimum wall thickness.

NOTE 2 — When specified by the purchaser, a nondestructive electric test, in accordance with Practices E 213, E 426, or E 571, may be used for seamless tubes, instead of the hydrostatic tests.

TABLE 1
CHEMICAL COMPOSITION

UNS No. Prefixes	ASTM Method
N02	E 39
N04	E 76
N06, N08	E 38,[A] E 354

[A] Methods E 38 are to be used for elements not covered by Test Methods E 354.

4.6 *Chemical Composition:*

4.6.1 In case of disagreement, the chemical composition shall be determined in accordance with Table 1.

4.6.2 The material shall conform to the chemical requirements prescribed in the individual specification.

4.6.3 The product (check) analysis of the material shall meet the requirements for the ladle analysis within the tolerance limits prescribed in Table 2.

4.7 *Tension Test*

4.7.1 Tension testing shall be conducted in accordance with Test Methods E 8.

4.7.2 The material shall conform to the tensile properties prescribed in the individual specification.

4.8 *Hardness Test* — Hardness testing shall be conducted in accordance with Test Methods E 18.

4.9 *Grain Size* — The measurement of average grain size may be carried out by the planimetric method, the

TABLE 2
PRODUCT (CHECK) ANALYSIS TOLERANCES

Element	Specified Limit, Minimum or Maximum, %	Tolerance Under Minimum or Over Maximum of Specified Element, %
Nickel	Over 10.00 to 20.00, incl	0.20
	Over 20.00 to 30.00, incl	0.25
	Over 30.00 to 40.00, incl	0.30
	Over 40.00 to 60.00, incl	0.35
	Over 60.00 to 90.00, incl	0.45
	Over 90.00	0.60
Chromium	Up to 1.00, incl	0.05
	Over 5.00 to 15.00, incl	0.15
	Over 15.00 to 25.00, incl	0.25
	Over 25.00 to 35.00, incl	0.30
Molybdenum	Up to 1.00, incl	0.03
	Over 1.00 to 3.00, incl	0.05
	Over 3.00 to 5.00, incl	0.10
	Over 5.00 to 20.00, incl	0.15
Iron	Up to 0.50, incl	0.03
	Over 0.50 to 2.50, incl	0.05
	Over 2.50 to 5.00, incl	0.07
	Over 5.00 to 10.00, incl	0.10
	Over 10.00 to 15.00, incl	0.15
	Over 15.00 to 30.00, incl	0.30
	Over 30.00 to 40.00, incl	0.45
Tungsten	Up to 1.00, incl	0.04
	Over 1.00 to 3.00, incl	0.10
	Over 3.00 to 5.00, incl	0.15
Carbon	Up to 0.02, incl	0.005
	Over 0.02 to 0.20, incl	0.01
	Over 0.20 to 0.60, incl	0.02
Silicon	Over 0.05 to 0.25, incl	0.02
	Over 0.25 to 0.50, incl	0.03
	Over 0.50 to 1.00, incl	0.05
	Over 1.00 to 2.00, incl	0.10
Cobalt	Over 0.20 to 1.00, incl	0.03
	Over 1.00 to 5.00, incl	0.05
	Over 15.00 to 20.00, incl	0.20
	Over 20.00 to 25.00, incl	0.25
Manganese	Up to 1.00, incl	0.03
	Over 1.00 to 3.00, incl	0.04
Vanadium	Up to 0.50, incl	0.04
Phosphorus	All	0.005

TABLE 2 (CONT'D)
PRODUCT (CHECK) ANALYSIS TOLERANCES

Element	Specified Limit, Minimum or Maximum, %	Tolerance Under Minimum or Over Maximum of Specified Element, %
Sulfur	Up to 0.02, incl	0.003
	Over 0.02 to 0.06, incl	0.005
Titanium	Up to 0.10, incl	0.02
	Over 0.10 to 0.50, incl	0.03
	Over 0.50 to 1.00, incl	0.04
	Over 1.00 to 2.00, incl	0.05
Copper	Up to 0.50, incl	0.03
	Over 0.50 to 5.00, incl	0.04
	Over 20.00 to 30.00, incl	0.15
	Over 30.00 to 40.00, incl	0.20
Columbium + Tantalum	Up to 1.50, incl	0.05
	Over 1.50 to 3.00, incl	0.10
	Over 3.00 to 5.00, incl	0.15
Aluminum	Up to 0.10, incl	0.02
	Over 0.10 to 0.50, incl	0.05
	Over 0.50 to 2.00, incl	0.10
Boron	Up to 0.10, incl	0.002
	Over 0.10 to 0.50, incl	0.005
Magnesium	Up to 0.05, incl	0.01
Zirconium	Up to 0.05, incl	0.01

comparison method, or the intercept method described in Test Methods E 112. In case of dispute, the "referee" method for determining average grain size shall be the intercept method.

4.10 For purposes of determining compliance with the specified limits for requirements of the properties listed in the following table, an observed value or a calculated value shall be rounded in accordance with the rounding method of Practice of E 29.

Requirements	Rounded Unit for Observed or Calculated Value
Chemical composition and tolerances	Nearest unit in the last right-hand place of figures of the specified limit
Tensile strength and yield strength	Nearest 1000 psi (7 MPa)
Elongation	Nearest 1%

TABLE 3
PERMISSIBLE VARIATIONS FOR OUTSIDE DIAMETER AND WALL THICKNESS OF WELDED TUBE[A,B]

Specified Outside Diameter	Outside Diameter		Permissible Variations of Thickness of Specified Nominal Wall, %		Thickness of Specified Minimum Wall, %	
in. (mm)	+	−	+	−	+	−
Over 0.125 (3.2) to 5/8 (16), excl	0.005 (0.13)	0.005 (0.13)	15.0	15.0	30	0
5/8 (16) to 1 1/2 (38), incl	0.0075 (0.19)	0.0075 (0.19)	12.5	12.5	28	0
Over 1 1/2 (38) to 3 (76), incl	0.010 (0.25)	0.010 (0.25)	12.5	12.5	28	0
Over 3 (76) to 4 1/2 (114), incl	0.015 (0.38)	0.015 (0.38)	12.5	12.5	28	0
Over 4 1/2 (114) to 6 (152), incl	0.020 (0.51)	0.020 (0.51)	12.5	12.5	28	0

[A] These permissible variations in outside diameter apply only to material as finished at the mill before subsequent swaging, expanding, bending, polishing, or other fabricating operations.
[B] The ovality provisions of 5.1 apply.

TABLE 4
PERMISSIBLE VARIATIONS FOR OUTSIDE DIAMETER AND WALL THICKNESS OF SEAMLESS COLD-WORKED TUBE[A]

Nominal Outside Diameter, in. (mm)	Permissible Variations					
	Outside Diameter, in. (mm)		Thickness of Specified Nominal Wall, %		Thickness of Specified Minimum Wall, %	
	+	−	+	−	+	−
Over 0.400 (10) to 5/8 (16) excl	0.005 (0.13)	0.005 (0.13)	15.0	15.0	30	0
5/8 (16) to 1 1/2 (38), incl	0.0075 (0.19)	0.0075 (0.19)	10.0	10.0	22	0
Over 1 1/2 (38) to 3 (76), incl	0.010 (0.25)	0.010 (0.25)	10.0	10.0	22	0
Over 3 (76) to 4 1/2 (114), incl	0.015 (0.38)	0.015 (0.38)	10.0	10.0	22	0
Over 4 1/2 (114) to 6 (152), incl	0.020 (0.51)	0.020 (0.51)	12.5	12.5	28	0
Over 6 (152) to 6 5/8 (158), incl	0.025 (0.64)	0.025 (0.64)	12.5	12.5	28	0
Over 6 5/8 (168) to 8 5/8 (219), incl	0.031 (0.79)	0.031 (0.79)	12.5	12.5	28	0

[A] *Ovality*—The ovality provisions of 5.1 apply.

TABLE 5
PERMISSIBLE VARIATIONS FOR OUTSIDE DIAMETER AND WALL THICKNESS OF HOT-FINISHED TUBE[A]

Nominal Outside Diameter, in. (mm)	Permissible Variations					
	Outside Diameter, in. (mm)		Thickness of Specified Nominal Wall, %		Thickness of Specified Minimum Wall, %	
	+	−	+	−	+	−
3/4 (19) to 1 1/2 (38), incl	0.015 (0.4)	0.031 (0.8)	12.5	12.5	28.5	0
Over 1 1/2 (38) to 4 (102), incl	0.031 (0.8)	0.031 (0.8)	12.5	12.5	28.5	0
Over 4 (102) to 9 1/4 (235), incl	0.062 (1.6)	0.031 (0.8)	12.5	12.5	28.5	0

[A] The ovality provisions of 5.1 apply.

5. Dimensions and Permissible Variations

5.1 *Diameter and Wall Thickness* — Individual measurements shall not exceed the tolerances specified in Tables 3, 4, and 5. The permissible variation in outside diameter is not sufficient to provide for ovality in thin-walled tubes. For thin-walled tubes the maximum and minimum diameters at any cross section shall not deviate from the nominal diameter by more than twice the permissible variation in outside diameter given in the tables; however, the mean diameter at that cross section must still be within the permissible variation.

5.2 *Length* — When material is ordered cut-to-length, the length shall conform to the permissible variations prescribed in Table 6.

TABLE 6
PERMISSIBLE VARIATIONS IN LENGTH[A]

Outside Diameter, in. (mm)	Cut Length, in. (mm)	
	Over	Under
Cold-finished: under 2 (50.8)	1/8 (3.2)	0
Hot-finished: 2 (50.8) and over	3/16 (4.8)	0
All sizes	3/16 (4.8)	0

[A] These permissible variations in length apply to tube in straight lengths. They apply to cut lengths up to and including 24 ft (7.3 m). For lengths over 24 ft an additional over-tolerance of 1/8 in. (3.2 mm) for each 10 ft (3.0 m) or fraction thereof shall be permissible up to a maximum additional over-tolerance of 1/2 in. (12.7 mm).

5.3 *Straightness* — Material shall be reasonably straight and free of bends and kinks.

5.4 *Ends* — Ends shall be plain cut and deburred.

6. Workmanship, Finish, and Appearance

6.1 The material shall be uniform in quality and temper, smooth, and free of imperfections that would render it unfit for use.

7. Sampling

7.1 *Lot* — A lot for chemical analysis shall consist of one heat.

7.1.1 A lot for all other testing shall consist of all material from the same heat, nominal size (excepting length), and condition (temper). When final heat treatment is in a batch-type furnace, a lot shall include only those tubes of the same size and the same heat which are heat-treated in the same furnace charge. When the final heat treatment is in a continuous furnace, a lot shall include all tubes of the same size and heat, annealed in the same furnace at the same temperature, time at temperature, and furnace speed, except not to exceed 20,000 lb.

7.1.2 Where material cannot be identified by heat, a lot shall consist of not more than 500 lb (227 kg) of material of the same alloy in the same condition (temper) and nominal size (excepting length).

NOTE 3 — For tension, hardness, flare flattening, and flare test requirements, the term lot applies to all lengths prior to cutting.

7.2 *Test Material Selection:*

7.2.1 *Chemical Analysis* — Representative samples from each lot shall be taken during pouring or subsequent processing.

7.2.2 *Mechanical and Other Properties* — Samples of the material to provide test specimens for mechanical and other properties shall be taken from such locations in each lot as to be representative of that lot. Test specimens shall be taken from material in that final condition (temper).

8. Retests and Retreatment

8.1 *Retests* — If the results of the mechanical tests of any group or lot do not conform to the requirements specified in the individual specification, retests may be made on additional tubes of double the original number from the same group or lot, each of which shall conform to the requirements specified.

8.2 *Retreatment* — If the individual tube or the tubes selected to represent any group or lot fail to conform to the test requirements, the individual tubes or the group or lot represented may be reheat treated and resubmitted for test. Not more than two reheat treatments shall be permitted.

9. Specimen Preparation

9.1 *Room Temperature Tensile Specimen* — Material shall be tested in the direction of fabrication. Whenever possible, the tube shall be tested in full tubular size. When testing in full tubular size is not possible, longitudinal strip specimens or the largest possible round specimen shall be used. In the event of disagreement when full tubular testing is not possible, a longitudinal strip specimen with reduced gage length as contained in Test Methods E 8 shall be used.

9.2 *Hardness Specimen* — The hardness specimen shall be prepared in accordance with Test Methods E 18. The test shall be made on the inside diameter surface of a specimen cut from the end or on the inside of the tube near the end, at the option of the manufacturer.

9.3 *Grain Size* — If required, the grain size specimen shall be a transverse sample representing full wall thickness.

10. Inspection

10.1 Inspection of the material shall be agreed upon by the purchaser and the supplier as part of the purchase contract.

11. Rejection and Rehearing

11.1 Material tested by the purchaser that fails to conform to the requirements of this specification may be

rejected. Rejection should be reported to the producer or supplier promptly and in writing. In case of dissatisfaction with the results of the test, the producer or supplier may make claim for a rehearing.

12. Certification

12.1 When specified in the purchase order or contract, a manufacturer's certification shall be furnished to the purchaser stating that the material has been manufactured, tested and inspected in accordance with this specification, and that the test results on representative samples meet specification requirements. When specified in the purchase order or contract, a report of the test results shall be furnished.

13. Product Marking

13.1 *Material Marking:*

13.1.1 The name or brand of the manufacturer, the name of the material or UNS number, the letters ASTM, the product specification number, heat number, class and nominal size shall be legibly marked on each piece $^{3}/_{4}$ in. (19.0 mm) and over in outside diameter, provided the length is not under 3 ft (914 mm). The material marking shall be by any method which will not result in harmful contamination.

13.1.2 For material less than $^{3}/_{4}$ in. (19.0 mm) outside diameter and material under 3 ft (914 mm) in length, the information specified in 13.1.1 shall be either legibly marked on each piece or marked on a tag securely attached to the handle or box in which the tube is shipped at the option of the manufacturer.

13.2 *Packaging* — The following information shall be marked on the material or included on the package, or on a label or tag attached thereto: The name of the material or UNS number, heat number, condition (temper), the letters ASTM, the product specification number, the size, gross, tare, and net weight, consignor and consignee address, contract or order number, or such other information as may be defined in the contract or purchase order.

SPECIFICATION FOR GENERAL REQUIREMENTS FOR NICKEL AND NICKEL-ALLOY WELDED PIPE

SB-775

(Identical with ASTM Specification B 775-00 except that certification has been made mandatory.)

1. Scope

1.1 This specification contains various requirements that, with the exception of Sections 5 and 10, are mandatory requirements to the following ASME nickel and nickel alloy, longitudinally welded piping specifications: SB-464, SB-514, SB-517, SB-619, SB-673, SB-675, SB-705, SB-723, SB-725.

1.2 One or more of the test requirements of Section 5 apply only if specifically stated in the product specification or in the purchase order.

1.3 In case of conflict between a requirement of the product specification and a requirement of this general specification, only the requirement of the product specification needs to be satisfied.

1.4 The values stated in inch-pound units are to be regarded as the standard. The values given in parentheses are for information only.

2. Referenced Documents

2.1 *ASTM Standards:*

B 880 Specification for General Requirements for Chemical Check Analysis Limits for Nickel, Nickel Alloys, and Cobalt Alloys
E 8 Test Methods for Tension Testing of Metallic Materials
E 18 Test Methods for Rockwell Hardness and Rockwell Superficial Hardness of Metallic Materials
E 29 Practice for Using Significant Digits in Test Data to Determine Conformance With Specifications
E 39 Test Methods for Chemical Analysis of Nickel
E 76 Test Methods for Chemical Analysis of Nickel-Copper Alloys
E 112 Test Methods for Determining Average Grain Size
E 213 Practice for Ultrasonic Examination of Metal Pipe and Tubing
E 426 Practice for Electromagnetic (Eddy-Current) Examination of Seamless and Welded Tubular Products, Austenitic Stainless Steel, and Similar Alloys
E 571 Practice for Electromagnetic (Eddy-Current) Examination of Nickel and Nickel Alloy Tubular Products
E 1473 Test Methods for Chemical Analysis of Nickel, Cobalt, and High-Temperature Alloys

2.2 *ASME (ANSI) Standards:*

B 1.20.1 Pipe Threads
B 36.10 Welded and Seamless Wrought Steel Pipe
B 36.19 Stainless Steel Pipe

3. Terminology

3.1 *Definitions:*

3.1.1 *average diameter* — the average of the maximum and minimum outside diameters, as determined at any one cross-section of the pipe.

3.1.2 *nominal wall* — a specified wall thickness with a plus or minus tolerance from the specified thickness.

3.1.3 *welded pipe* — a round hollow produced by forming flat stock and joining the single longitudinal seam by welding, and produced to the particular dimensions commercially known as pipe sizes (NPS).

4. Chemical Composition

4.1 In case of disagreement, the chemical composition shall be determined in accordance with the following methods:

UNS No. Prefixes	ASTM Method
N02	E 39
N04	E 76
N06, N08	E 1473

4.2 The ladle analysis of the material shall conform to the chemical requirements prescribed by the individual product specification.

4.3 The product (check) analysis of the material shall meet the requirements for the ladle analysis within the tolerance limits prescribed in B 880.

5. Test Requirements

5.1 *Flattening Test:*

5.1.1 A length of pipe not less than three times the specified diameter or 4 in. (102 mm), whichever is longer, shall be flattened under a load applied gradually at room temperature until the distance between the platens is five times the wall thickness. The weld shall be positioned 90° from the direction of the applied flattening force.

5.1.2 The flattened specimen shall not exhibit cracks.

5.1.3 Superficial ruptures resulting from surface imperfections shall not be a cause for rejection.

5.2 *Pressure (Leak Test):*

5.2.1 *Hydrostatic* — Each pipe shall be tested by the manufacturer to an internal hydrostatic pressure of 1000 psi (6.9 MPa) provided that the fiber stress, calculated from the following equation, does not exceed the allowable fiber stress for the material:

$$P = 2St/D$$

where:

P = hydrostatic test pressure, psi (MPa),
S = allowable fiber stress, for material in the condition (temper) furnished as specified in the product specification (S is calculated as the lower of $\frac{2}{3}$ of the specified minimum 0.2% offset yield strength or $\frac{1}{4}$ of the specified minimum ultimate strength for the material),
t = minimum wall thickness permitted, in. (mm), including minus tolerance, if any, and
D = nominal outside diameter of the pipe, in. (mm).

5.2.1.1 The test pressure must be held for a minimum of 5 s.

NOTE 1 — Testing at a pressure greater than 1000 psi may be performed upon agreement between the purchaser and the manufacturer provided that the allowable fiber stress is not exceeded.

5.2.2 *Pneumatic (Air Underwater Test)* — Each pipe shall be tested at a pressure of 150 psi (1.05 MPa). The test pressure shall be held for a minimum of 5 s. Visual examination is to be made when the material is submerged and under pressure. The full length of pipe must be examined for leaks.

5.2.3 If any pipe shows leaks during hydrostatic or pneumatic testing, it shall be rejected.

5.3 *Nondestructive Electric Test:*

5.3.1 *Eddy-Current Testing* — Testing shall be conducted in accordance with Practices E 426 or E 571. The eddy-current examination reference in this specification has the capability of detecting significant discontinuities, especially of the short, abrupt type.

5.3.1.1 Unless otherwise specified by the purchaser, the calibration standard shall contain, at the option of the manufacturer, any one of the following discontinuities to establish a minimum sensitivity level for rejection. The discontinuity shall be placed in the weld if visible.

5.3.1.2 *Drill Hole* — A hole not larger than 0.031 in. (0.79 mm) in diameter shall be drilled radially and completely through the wall, care being taken to avoid distortion of the material while drilling.

5.3.1.3 *Transverse Tangential Notch* — Using a round file or tool with a $\frac{1}{4}$ in. (6 mm) diameter, a notch shall be filed or milled on the pipe outside diameter tangential to the surface and transverse to the longitudinal axis of the material. Said notch shall have a depth not exceeding 12.5% of the specified wall thickness of the material, or 0.004 in. (0.10 mm), whichever is greater.

5.3.2 *Ultrasonic Testing* — Testing shall be conducted in accordance with Practice E 213. The ultrasonic examination referred to in this specification is intended to detect longitudinal discontinuities having a reflective area similar to or larger than the calibration reference notches specified in 5.3.2.1. The examination may not detect circumferentially oriented imperfections or short, deep defects.

5.3.2.1 For ultrasonic testing, longitudinal calibration notches shall be machined on the outside and inside diameter surfaces. The depth of the notches shall not exceed 12.5% of the specified wall thickness or 0.004 in. (0.10 mm), whichever is greater. The notch shall be placed in the weld, if visible.

5.3.3 *Calibration Frequency* — The frequency of calibration checks shall be as follows:

5.3.3.1 At the beginning of each production run.

5.3.3.2 At least every four hours during testing.

5.3.3.3 At the end of each production run.

5.3.3.4 After any suspected equipment malfunction or work stoppage.

5.3.3.5 If, during any check, the equipment fails to detect the calibration defects, the instrument must be recalibrated and all material tested since the last satisfactory check shall be retested.

5.3.4 *Acceptance and Rejection* — Material producing a signal equal to or greater than the calibration defect shall be subject to rejection.

5.3.4.1 Test signals that are produced by imperfections that cannot be identified or that are produced by cracks or crack-like imperfections shall result in rejection of the pipe, subject to rework and retest.

5.3.4.2 If the imperfection is judged as not fit for use, the tube shall be rejected, but may be reconditioned and retested providing the wall thickness requirements are met. To be accepted, retested material shall meet the original electric test requirements.

5.3.4.3 If the imperfection is explored to the extent that it can be identified, and the pipe is determined to be fit for use, the material may be accepted without further testing, providing the imperfection does not encroach on minimum wall thickness requirements.

5.4 *Tension Test* — Tension testing shall be conducted in accordance with Test Methods E 8.

5.4.1 The material shall conform to the tensile properties prescribed in the individual product specification.

5.5 *Hardness Test* — Hardness testing shall be conducted in accordance with Test Methods E 18.

5.6 *Grain Size* — The measurement of average grain size may be carried out by the planimetric method, the comparison method, or the intercept method described in Test Methods E 112. In case of dispute, the "referee" method for determining average grain size shall be the intercept method.

5.7 For purposes of determining compliance with the specified limits for requirements of the properties listed in the following table, an observed value or a calculated value shall be rounded in accordance with the rounding method of Practice E 29.

Requirements	Rounded Unit for Observed Or Calculated Value
Chemical composition and tolerances	Nearest unit in the last right-hand place of figures of the specified limit
Tensile strength and yield strength	Nearest 1000 psi (7 MPa)
Elongation	Nearest 1%

6. Dimensions and Permissible Variations

6.1 Dimensions of pipe are shown in Table 1.

6.1.1 Permissible variations in outside diameter and wall thickness are shown in Table 2.

6.2 *Length* — When material is ordered as cut-to-length, the length shall conform to the permissible variations prescribed in Table 3. When material is ordered to random lengths, the lengths and variations shall be agreed upon between the manufacturer and purchaser.

6.3 *Straightness* — Material shall be reasonably straight and free of bends and kinks.

6.4 *Ends* — Ends shall be reasonably square and free from burrs.

7. Workmanship, Finish, and Appearance

7.1 The material shall be uniform in quality and temper, smooth, and free from imperfections that would render it unfit for use.

8. Sampling

8.1 *Lot Definition:*

8.1.1 A lot for chemical analysis shall consist of one heat.

8.1.2 A lot for all other testing shall consist of all material from the same heat, nominal size (excepting length), and condition (temper). When final heat treatment is in a batch-type furnace, a lot shall include only those pipes of the same size and the same heat that are heat-treated in the same furnace charge. When heat treatment is in a continuous furnace, a lot shall include all pipes of the same size and heat, heat-treated in the same furnace at the same temperature, time at temperature, and furnace speed during one production run. At no time shall a lot consist of more than 20 000 lb (9070 kg).

8.1.2.1 Where material cannot be identified by heat, a lot shall consist of not more than 500 lb (227 kg) of material of the same alloy in the same condition (temper) and nominal size (excepting length).

NOTE 2 — For tension, hardness, and flattening test requirements, the term lot applies to all lengths prior to cutting.

8.2 *Test Material Selection:*

8.2.1 *Chemical Analysis* — Representative samples from each lot shall be taken during pouring or subsequent processing.

8.2.2 *Mechanical and Other Properties* — Samples of the material to provide test specimens for mechanical and other properties shall be taken from such locations

TABLE 1
DIMENSIONS OF PIPE

NPS Designator	Outside Diameter		Nominal Wall Thickness							
			Schedule 5S[A]		Schedule 10S[A]		Schedule 40S		Schedule 80S	
	in.	mm	in.	mm	in.	mm	in.	mm	in.	mm
1/8	0.405	10.29	...	...	0.049	1.24	0.068	1.73	0.095	2.41
1/4	0.540	13.72	...	...	0.065	1.65	0.088	2.24	0.119	3.02
3/8	0.675	17.15	...	...	0.065	1.65	0.091	2.31	0.126	3.20
1/2	0.840	21.34	0.065	1.65	0.083	2.11	0.109	2.77	0.147	3.73
3/4	1.050	26.67	0.065	1.65	0.083	2.11	0.113	2.87	0.154	3.91
1.0	1.315	33.40	0.065	1.65	0.109	2.77	0.133	3.38	0.179	4.55
1 1/4	1.660	42.16	0.065	1.65	0.109	2.77	0.140	3.56	0.191	4.85
1 1/2	1.900	48.26	0.065	1.65	0.109	2.77	0.145	3.68	0.200	5.08
2	2.375	60.33	0.065	1.65	0.109	2.77	0.154	3.91	0.218	5.54
2 1/2	2.875	73.03	0.083	2.11	0.120	3.05	0.203	5.16	0.276	7.01
3	3.500	88.90	0.083	2.11	0.120	3.05	0.216	5.49	0.300	7.62
3 1/2	4.000	101.60	0.083	2.11	0.120	3.05	0.226	5.74	0.318	8.08
4	4.500	114.30	0.083	2.11	0.120	3.05	0.237	6.02	0.337	8.56
5	5.563	141.30	0.109	2.77	0.134	3.40	0.258	6.55	0.375	9.52
6	6.625	168.28	0.109	2.77	0.134	3.40	0.280	7.11	0.432	10.97
8	8.625	219.08	0.109	2.77	0.148	3.76	0.322	8.18	0.500	12.70
10	10.750	273.05	0.134	3.40	0.165	4.19	0.365	9.27	0.500[B]	12.70[B]
12	12.750	323.85	0.156	3.96	0.180	4.57	0.375[B]	9.52[B]	0.500[B]	12.70[B]
14	14.000	355.60	0.156	3.96	0.188[B]	4.78[B]	...	...	...	...
16	16.000	406.40	0.165	4.19	0.188[B]	4.78[B]	...	...	...	...
18	18.000	457.20	0.165	4.19	0.188[B]	4.78[B]	...	...	...	...
20	20.000	508.00	0.188	4.78	0.218[B]	5.54[B]	...	...	...	...
22	22.000	558.80	0.188	4.78	0.218[B]	5.54[B]	...	...	...	...
24	24.000	609.60	0.218	5.54	0.250	6.35	...	...	...	...
30	30.000	762.00	0.250	6.35	0.312	7.92	...	...	...	...

NOTE 1 — The following table is a reprint of Table 1 of ASME B36.19.
NOTE 2 — The decimal thicknesses listed for the respective pipe sizes represent their nominal wall dimensions.

[A] Schedules 5S and 10S wall thicknesses do not permit threading in accordance with ASME B1.20.1.
[B] These do not conform to ASME B36.10.

in each lot as to be representative of that lot. Test specimens shall be taken from material in the final condition (temper).

9. Retests and Retreatment

9.1 *Retests* — If the results of the mechanical tests of any group or lot do not conform to the requirements specified in the individual specification, retests may be made on additional pipes of double the original number from the same group or lot, each of which shall conform to the requirements specified.

9.2 *Retreatment* — If the individual pipes or the pipes selected to represent any group or lot fail to conform to the test requirements, the individual pipes or the group or lot represented may be reheat treated and resubmitted for test. Not more than two reheat treatments shall be permitted.

10. Specimen Preparation

10.1 *Room Temperature Tensile Specimen:*

10.1.1 Material shall be tested in the direction of fabrication. Whenever possible, the pipe shall be tested in full cross-section. When testing in full section is not possible, longitudinal strip specimens or the largest possible round section shall be used. In the event of disagreement when full section testing is not possible, a longitudinal strip specimen with reduced gage length as contained in Test Methods E 8 shall be used.

10.2 *Hardness Specimen:*

10.2.1 The hardness specimen shall be prepared in accordance with Test Methods E 18. The test shall be made on the inside diameter surface of a specimen cut from the end, or on the inside of the pipe near the end, at the option of the manufacturer.

TABLE 2
PERMISSIBLE VARIATIONS IN OUTSIDE DIAMETER[A,B] AND WALL THICKNESS[C] FOR WELDED PIPE

	Permissible Variations in Outside Diameter			
	Over		Under	
NPS Designator	in.	mm	in.	mm
1/8 to 1 1/2, incl.	1/64 (0.015)	0.4	1/32 (0.031)	0.8
Over 1 1/2 to 4, incl.	1/32 (0.031)	0.8	1/32 (0.031)	0.8
Over 4 to 8, incl.	1/16 (0.062)	1.6	1/32 (0.031)	0.8
Over 8 to 18, incl.	3/32 (0.093)	2.4	1/32 (0.031)	0.8
Over 18 to 26, incl.	1/8 (0.125)	3.2	1/32 (0.031)	0.8
Over 26 to 34, incl.	5/32 (0.156)	4.0	1/32 (0.031)	0.8
Over 34 to 48, incl.	3/16 (0.187)	4.8	1/32 (0.031)	0.8

[A] These permissible variations in outside diameter apply only to material as finished at the mill before subsequent swaging, expanding, bending, polishing, or other fabricating operations.

[B] Ovality is the difference between the maximum and the minimum outside diameter measured at any one cross-section. There is no additional tolerance for ovality on material having a nominal wall thickness for more than 3% of the outside diameter. On this material, the average of the maximum and the minimum outside diameter measurements will fall within the outside diameter tolerance shown in Table 2. An additional ovality allowance of twice the outside diameter tolerance spreads shown in Table 2, applied ±1/2, is allowed for material having a nominal wall thickness of 3% or less of the nominal outside diameter.

[C] The wall thickness variation shall not exceed ±12.5% of the nominal wall thickness.

TABLE 3
PERMISSIBLE VARIATIONS IN CUT LENGTH[A]

Outside Diameter, in. (mm)	Length Tolerance, in. (mm)	
	Over	Under
Cold finished: all sizes	1/4 (6.4)	0
Hot finished: all sizes	1/4 (6.4)	0

[A] These permissible variations in length apply to pipe in straight lengths. They apply to cut lengths up to and including 24 ft (7.3 m). For lengths over 24 ft, an additional over-tolerance of 1/8 in. (3.2 mm) for each 10 ft (3.0 m) or fraction thereof shall be permitted up to a maximum additional over-tolerance of 1/2 in. (12.7 mm).

10.3 *Grain Size:*

10.3.1 If required, the grain size specimen shall be a transverse sample representing full wall thickness.

11. Inspection

11.1 Witnessing of testing or inspection by the purchaser's representative shall be agreed upon by the purchaser and the manufacturer as part of the purchase contract.

12. Rejection and Rehearing

12.1 Material tested by the purchaser that fails to conform to the requirements of this specification may be rejected. Rejection should be reported to the supplier promptly and in writing. In case of dissatisfaction with the results of the test, the producer or supplier may make claim for a rehearing.

13. Certification

13.1 A manufacturer's certification shall be furnished to the purchaser stating that the material has been manufactured, tested, and inspected in accordance with this specification, and that the test results on representative samples meet specification requirements. A report of the test results shall be furnished.

14. Product Marking

14.1 *Material Marking:*

14.1.1 The name or brand of the manufacturer, the name of the material or UNS number, the letters ASME, the product specification number, heat number, class (if applicable), and nominal pipe size shall be legibly marked on each piece 1/2 NPS and larger and lengths greater than 3 ft (914 mm). The material marking shall be by any method that will not result in harmful contamination.

14.1.2 For material smaller than 1/2 NPS, or lengths under 3 ft (914 mm), the information specified in 14.1.1 shall be legibly marked on each piece or marked on a tag securely attached to the bundle or box in which the material is shipped, at the option of the manufacturer.

15. Packaging and Package Marking

15.1 The following information shall be marked on the material or included on the package, or on a label or tag attached thereto: name of the material or UNS number; heat number; condition (temper); the letters "ASME," the product specification number; the nominal pipe size; gross, tare, and net weights; consignor and consignee addresses; contract or order number; and such other information as may be defined by the purchase contract.

16. Keywords

16.1 welded pipe

SPECIFICATION FOR UNS N08367 AND UNS N08926 WELDED PIPE

SB-804

(Identical with ASTM Specification B 804-93 except that the following additional requirements apply.)

All products furnished under the SB specification are intended for application under the rules of Section III of the ASME Boiler and Pressure Vessel Code. Manufacture of such products is limited to manufacturers who hold the appropriate ASME Certificate of Authorization and Code Symbol Stamp. In addition to conforming to this specification, the manufacturer shall meet all applicable requirements of Section III of the Code. The plate used to fabricate the pipe shall conform to SB-688. The joints shall be full penetration butt welds as obtained by double welding or by other means, which will obtain the same quality of deposited and weld metal on the inside and outside. Welds using metal backing strips which remain in place are excluded. The product is subject to all requirements of Section III of the Code including welding, heat treatment, nondestructive examination, authorized inspection at the point of manufacture, and application of the Code Symbol Stamp.

The applicable ASME Partial Data Report Form signed by an Authorized Inspector and a certified mill test report shall be furnished for each lot of pipe. The term "lot" applies to all pipe of the same mill heat of material and wall thickness which is heat treated in one furnace charge. For pipe that is not heat treated, or that is heat treated in a continuous furnace, a lot shall consist of each 200 ft (61 m) or fraction thereof of all pipe of the same mill heat material and wall thickness subjected to the same heat treatment. For pipe that is heat treated in a batch-type furnace that is automatically controlled within a 50°F range and is equipped with recording pyrometers so that the heating records are available, a lot may be defined the same as for continuous furnaces. Each length of pipe shall be marked in such a maneer as to identify each such piece with the lot and the certified mill test report.

1. Scope

1.1 This specification covers UNS N08367 and UNS N08926 welded pipe for general corrosion applications. (Although no restrictions are placed on the sizes of pipe that may be furnished under this specification, commercial practice is commonly limited to sizes no less than 8 in. nominal diameter.)

1.2 Six classes of pipe are covered as follows:

1.2.1 Class 1 pipe shall be double welded by processes employing filler metal in all passes and shall be completely radiographed.

1.2.2 Class 2 pipe shall be double welded by processes employing filler metal in all passes. No radiography is required.

1.2.3 Class 3 pipe shall be double welded by processes employing filler metal in all passes except the inside root weld may be made without the addition of filler metal. Welds are to be completely radiographed.

1.2.4 Class 4 pipe shall be double welded by processes employing filler metal in all passes except the inside root weld may be made without the addition of filler metal. No radiography is required.

1.2.5 Class 5 pipe shall be single welded by processes employing filler metal in all passes except that the pass exposed to the inside pipe surface may be made without the addition of filler metal. Welds are to be completely radiographed.

1.2.6 Class 6 pipe shall be single welded by processes employing filler metal in all passes except that the pass exposed to the inside pipe surface may be made without the addition of filler metal. No radiography is required.

1.3 The values stated in inch-pound units are to be regarded as the standard. The values given in parentheses are for information only.

1.4 The following safety hazards caveat pertains only to the test method portion, Section 12, of this standard: *This standard does not purport to address all of the safety problems, if any, associated with its use. It is the responsibility of the user of this standard to establish appropriate safety and health practices and determine the applicability of regulatory limitations prior to use.*

2. Referenced Documents

2.1 *ASTM Standards:*

A 262 Practices for Detecting Susceptibility to Intergranular Attack in Austenitic Stainless Steels

A 370 Test Methods and Definitions for Mechanical Testing of Steel Products

B 625 Specification for UNS N08904, UNS N08925, UNS N08031, UNS N08932, and UNS N08926 Plate, Sheet, and Strip

B 688 Specification for Chromium-Nickel-Molybdenum-Iron (UNS N08366 and UNS N08367) Plate, Sheet, and Strip

E 8 Test Methods for Tension Testing of Metallic Materials

E 29 Practice for Using Significant Digits in Test Data to Determine Conformance With Specifications

E 38 Methods for Chemical Analysis of Nickel-Chromium and Nickel-Chromium-Iron Alloys

E 354 Test Methods for Chemical Analysis of High-Temperature, Electrical, Magnetic, and Other Similar Iron, Nickel, and Cobalt Alloys

E 1019 Test Methods for Determination of Carbon, Sulfur, Nitrogen, Oxygen, and Hydrogen in Steel and in Iron, Nickel, and Cobalt Alloys

2.2 *ASME Boiler and Pressure Vessel Code:*

Section VIII, Division 1 Rules for Construction of Pressure Vessels

Section IX Qualification Standard for Welding and Brazing Procedures, Welders, Brazers, and Welding and Brazing Operators

2.3 *American Welding Society Standards:*

AWS A5.11 Nickel and Nickel Alloy Covered Welded Electrodes

AWS A5.14 Nickel and Nickel Alloy Bare Welding Rods and Electrodes

3. Ordering Information

3.1 Orders for material under this specification shall include the following information:

3.1.1 Quantity (feet or number of lengths),

3.1.2 Class (see 1.2),

3.1.3 Size (outside diameter and minimum wall thickness),

3.1.4 Length (specific or random),

3.1.5 ASTM specification number,

3.1.6 Authorization for repair of plate defects by welding without prior approval if such is intended (see 8.4),

3.1.7 Circumferential weld permissibility (see 7.3.2), and

3.1.8 Supplementary requirements.

4. Materials and Manufacture

4.1 *Materials* — The starting material shall conform to the requirements of Specification B 688 for UNS N08367 and Specification B 625 for UNS N08926.

4.2 *Manufacture:*

4.2.1 The joints shall be double or single welded, full penetration welds made in accordance with ASME Boiler and Pressure Vessel Code, Section IX.

4.2.2 The welds shall be made either manually or automatically by an electric process involving the deposition of filler metal according to the class specified.

4.2.3 The weld surface on either side of the weld shall be flush with the base plate or shall have a reasonably uniform crown, not to exceed $\frac{1}{8}$ in. (3.2 mm). Any weld reinforcement may be removed at the manufacturer's option or by agreement between the manufacturer and purchaser. The contour of the reinforcement shall be reasonably smooth and free of irregularities. The deposited metal shall be fused uniformly into the plate surface. No concavity of contour is permitted unless the resulting thickness of weld metal is equal to or greater than the minimum thickness of the adjacent base metal.

4.2.4 Weld defects shall be repaired by removal to sound metal and rewelding. Subsequent heat treatment and inspection shall be as required on the original welds.

4.3 *Heat Treatment* — The recommended heat treatment shall consist of heating to a minimum temperature of 2025°F for UNS N08367 and 2012°F for UNS N08926 followed by quenching in water or rapidly cooling by other means.

5. Chemical Composition

5.1 The chemical composition of the pipe shall conform to the requirements in Table 1 of Specification B 688 for UNS N08367 and Table 1 of Specification B 625 for UNS N08926.

TABLE 1
MECHANICAL PROPERTY REQUIREMENTS

	Tensile Strength, min.		Yield Strength, [Note (1)] min.		Elongation in 2 in. or 50.8 mm, min., %
	ksi	MPa	ksi	MPa	
UNS N0 8367	95	655	45	310	30
UNS N0 8926	94	650	43	295	35

NOTE:
(1) Yield strength shall be determined by the offset method at 0.2% limiting permanent set in accordance with Test Methods E 8. An alternative method of determining yield strength may be based on a total extension under load of 0.5%.

5.2 The alloy content of the deposited weld metal shall conform to that required for the plate or the welding electrodes as shown in Specification AWS 5.11 for ENiCrMo-3, ENiCrMo-4, and ENiCrMo-10 or AWS 5.14 for ERNiCrMo-10, ERNiCrMo-3, and ERNiCrMo-4.

5.3 If product analysis is made of the plate or weld metal by the purchaser, the chemical composition thus determined shall conform to the requirements specified in 5.1 and 5.2 subejct to the permissible tolerances in Table 1 of Specification B 688 for UNS N08367 and specified in 5.1 and 5.2 subject to the permissible tolerances in Table 2 of Specification B 625 for UNS N08926.

6. Mechanical Properties and Other Requirements

6.1 *Mechanical Properties:*

6.1.1 The mechanical properties of the plate shall be in accordance with Table 1. Tension tests made by the plate manufacturer shall qualify the plate material.

6.1.2 Transverse tension tests taken across the welded joint shall have the same minimum ultimate tensile strength as the specified minimum ultimate tensile strength of the plate.

6.2 *Transverse Guided Weld Bend Test Requirements* — Bends made in accordance with Fig. 1 shall be acceptable if no cracks or other imperfections exceeding $\frac{1}{8}$ in. (3.2 mm) in any direction are present in the weld metal or between the weld and the pipe metal after bending. Cracks that originate along the edges of the specimen during testing, and that are less than $\frac{1}{4}$ in. (6.3 mm) measured in any direction, shall not be considered.

6.3 *Pressure Test* — Any pipe that shows laeks during the pressure test conducted in accordance with 12.4 shall be rejected, but any leaking areas may be cut out and the pipe retested as above.

6.4 *Radiographic Examination*— For Classes 1, 3, and 5 pipe, radiographic examination shall be in accordance with the requirements of the ASME Boiler and Pressure Vessel Code, Section VIII, latest edition, Paragraph UW-51.

7. Dimensions, Mass, and Permissible Variations

7.1 Permissible variations in dimensions at any point in a length of pipe shall not exceed the following:

7.1.1 *Outside Diameter* — Based on circumferential measurement, ±0.5% of the nominal outside diameter.

7.1.2 *Out-of-Roundness* — Differences between major and minor outside diameters, 1.0% of the specified outside diameter.

7.1.3 *Alignment (Camber)* — Using a 10-ft (3-m) straightedge placed so that both ends are in contact with the pipe, the camber shall not be more than $\frac{1}{8}$ in. (3.17 mm).

7.2 *Thickness* — The minimum wall thickness at any point in the pipe shall not be more than 0.01 in. (0.25 mm) under the nominal thickness.

7.3 *Lengths:*

7.3.1 The lengths required shall be specified in the orders.

7.3.2 Circumferentially welded joints of the same quality as the longitudinal joints shall be permitted by agreement between the manufacturer and the purchaser.

8. Workmanship, Finish, and Appearance

8.1 Pipe shall be furnished with smooth ends, free of burrs.

8.2 The finished pipe shall be free of injurious defects and shall have a workmanlike finish.

8.3 *Repair of Plate Defects by Machining or Grinding* — Pipe showing moderate slivers may be machined or ground inside or outside to a depth that shall ensure the removal of all included scale and slivers, provided the wall thickness is not reduced below the specified minimum wall thickness. Machining or grinding shall follow inspection of the pipe as rolled and shall be followed by supplementary visual inspection.

8.4 *Repair of Plate Defects by Welding* — Repair of injurious defects shall be permitted only with the approval of the purchaser. Defects shall be thoroughly chipped out before welding. The repairs shall be radiographed and if

the pipe itself has already been heat treated, it shall then be heat treated again except in the case of small welds that, in the estimation of the purchaser's inspector, do not require heat treatment. Each length of pipe required in this manner shall be hydrostatically tested after being repaired.

8.5 The pipe shall be sandblasted or pickled to remove all scale and then passivated.

9. Sampling

9.1 *Lots for Chemical Analysis and Mechanical Testing:*

9.1.1 *Heat Analysis* — A lot shall consist of one heat.

9.1.2 *Mechanical Testing* — A lot shall consist of the material of the same nominal size from one heat and condition.

9.2 *Sampling for Chemical Analysis:*

9.2.1 A representative sample shall be taken by the plate manufacturer during pouring or subsequent processing.

9.2.2 Product analysis, if performed, shall be wholly the responsibility of the purchaser.

9.3 *Sampling for Mechanical Properties* — Transverse tension and bend test specimens shall be cut after final heat treatment from the end of the finished pipe or from a test plate of the same material as the pipe that is attached to the end of the cylinder and welded as a prolongation of the longitudinal pipe seam.

10. Number of Tests and Retests

10.1 *Chemical Analysis* — One test per lot.

10.2 *Transverse Tension Test* — One per lot.

10.3 *Transverse Guided Weld Bend Test* — One face bend and one root bend per lot (Fig. 2).

10.4 *Pressure Test* — Each pipe shall be subjected to the pressure test.

10.5 *Retests:*

10.5.1 If the results of any mechanical tests of pipe material of any lot do not conform to the requirements specified in Section 6, retest shall be made on double the original number from the same lot, each of which shall conform to the requirements specified.

10.5.2 If the results of any mechanical tests of any lot do not conform to the requirements specified, such lot may be reworked and resubmitted. The same number of tests as originally specified shall be required on reworked and resubmitted pipe.

11. Specimen Preparation

11.1 The test specimens required by this specification shall conform to those described in Test Methods and Definitions A 370.

11.2 The transverse tension and bend test specimens shall be flattened cold before final machining to size if flattening is required.

11.3 Tension and bend test specimens shall be the full thickness of the material as rolled and shall be machined to the form and dimensions shown in Figs. 2, 3, and 4.

11.4 If any test specimen shows flaws or defective machining, it may be discarded and another specimen substituted.

12. Test Methods

12.1 The chemical composition and mechanical properties of the material as enumerated in this specification shall be determined, in case of disagreement, in accordance with the following ASTM methods:

12.1.1 *Chemical Analysis* — Methods E 38 and Test Methods E 354. Iron shall be determined arithmetically by difference. Methods E 38 is to be used only for elements not covered by Test Methods E 354. Use Test Methods E 1019 for Nitrogen.

12.1.2 *Tension Test* — Test Methods E 8.

12.2 For the purposes of determining compliance with the limits in this specification, an observed value or a calculated value shall be rounded as indicated, in accordance with the rounding method of Practice E 29:

Requirements	Rounded Unit for Observed or Calculated Value
Chemical composition and tolerances	Nearest unit in the last right-hand place of figures of the specified limit
Tensile strength and yield strength	Nearest 1000 psi (6.9 MPa)
Elongation	Nearest 1%

12.3 *Tension Test* — If the percent of elongation of any test specimen is less than that specified and any part of the fracture is more than $\frac{3}{4}$ in. (19.05 mm) from the center of the gage length, as indicated by scribe marks

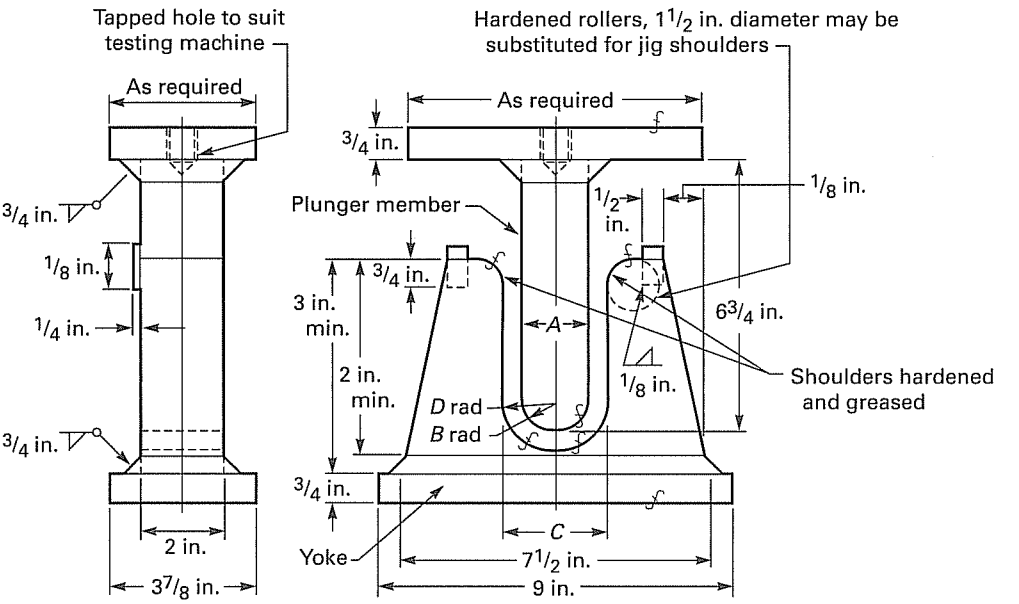

Test Specimen Thickness, in.	A	B	C	D
3/8	1 1/2	3/4	2 3/8	1 3/16
t	4t	2t	6t + 1/8	3t + 1/16

NOTE: 1 in. = 25.4 mm

FIG. 1 GUIDED-BEND TEST JIG

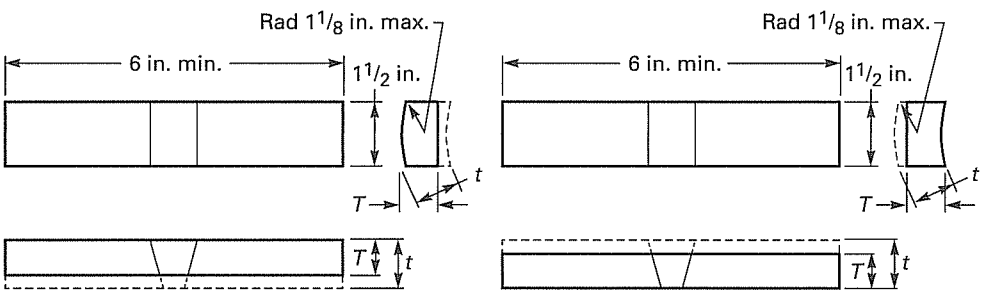

Pipe Wall Thickness, in. (mm)	Test Specimen Thickness, in. (mm)
Up to 3/8 (9.53), incl	t
Over 3/8 (9.53)	3/8 in.

NOTE—1/8 in. = 3.18 mm; 1 1/2 in. = 38.1 mm; 6 in. = 152 mm.

FIG. 2 TRANSVERSE FACE- AND ROOT-BEND TEST SPECIMEN

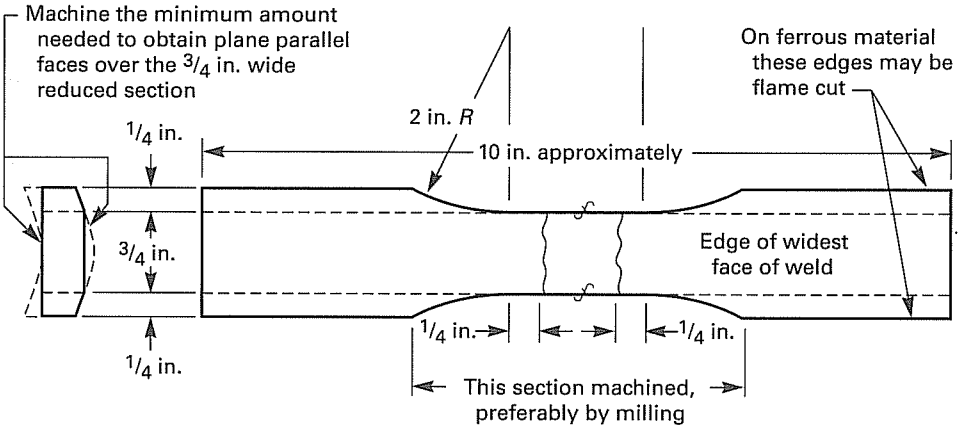

NOTE—1 in. = 25.4 mm.

FIG. 3 REDUCED-SECTION TENSION TEST SPECIMEN

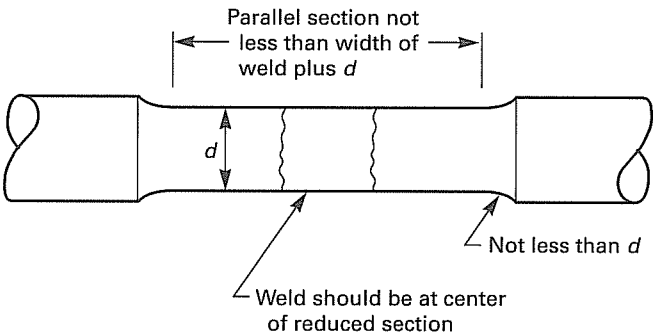

NOTE—The ends may be of any shape to fit the holders of the testing machine in such a way that the load is applied axially.

FIG. 4 ALTERNATIVE REDUCED-SECTION TENSION TEST SPECIMEN

on the specimen before testing, or if a specimen breaks due to a flaw, a retest shall be allowed.

12.4 *Hydrostatic Test* — When pipe is hydrostatically tested, such testing shall be done at a pressure determined by the following equation, but shall not exceed 2500 psi (17 MPa) for nominal sizes 3 in. and under, or 2800 psi (19 MPa) for all nominal sizes over 3 in.

$$P = 2St/D$$

or

$$S = PD/2t$$

where:

P = hydrostatic test pressure, psi (MPa),
S = allowable fiber stress or 20,000 psi (138 MPa),
t = specified wall thickness, in. or mm, and
D = specified outside diameter, in. or mm

12.4.1 The test pressure shall be held for a minimum of 5 s.

13. Inspection

13.1 Inspection of the material shall be agreed upon between the the purchaser and the supplier as part of the purchase contract.

14. Rejection and Rehearing

14.1 Material that fails to meet the requirements of this specification may be rejected Rejection shall be

reported to the producer or supplier promptly and in writing. In case of dissatisfaction with the results of the test, the producer or supplier may make claim for a rehearing.

15. Certification

15.1 When specified on the purchase order or contract, a producer's or supplier's certification shall be furnished to the purchaser that the material was manufactured, sampled, tested, and inspected in accordance with this specification and has been found to meet the requirements. When specified on the order or contract, a report of test results shall be furnished.

16. Marking

16.1 The name or brand of the manufacturer, the grade of the material from which the pipe is made, the ASTM specification, type number, and heat number shall be legibly stenciled within 12 in. (305 mm) of one end on each pipe.

16.2 The marking paint or ink shall not contain metal or metal salts in such amounts as would cause corrosive attack on heating.

SUPPLEMENTARY REQUIREMENT

The following supplementary requirement shall be applied only when specified by the purchaser in the inquiry, contract, or order.

S1. Intergranular Corrosion Test

S1.1 When specified, material shall pass intergranular corrosion tests conducted by the manufacturer in accordance with Practices A 262, Practice E. Specimens shall be sensitized for 1 h at 1250°F (677°C) before being subjected to the corrosion test.

SPECIFICATION FOR COBALT-CHROMIUM-NICKEL-MOLYBDENUM-TUNGSTEN ALLOY (UNS R31233) ROD

SB-815

(Identical with ASTM Specification B 815-97 except that certification has been made mandatory.)

1. Scope

1.1 This specification covers cobalt-chromium-nickel-molybdenum-tungsten alloy UNS R31233 in the form of rod for wear applications and general corrosion service.

1.2 The following products are covered under this specification:

1.2.1 Rods $^{3}/_{16}$ to $^{3}/_{4}$ in. (9.76 to 19.05 mm) exclusive in diameter, hot or cold finished, solution-annealed, and pickled or mechanically descaled; and

1.2.2 Rods $^{3}/_{4}$ to $3\,^{1}/_{2}$ in. (19.05 to 88.9 mm) inclusive in diameter, hot or cold finished, solution annealed, ground, or turned.

1.3 The values stated in inch-pound units are to be regarded as the standard. The values given in parentheses are for information only.

2. Referenced Documents

2.1 *ASTM Standards:*

E 8 Test Methods for Tension Testing of Metallic Materials

E 29 Practice for Using Significant Digits in Test Data to Determine Conformance with Specifications

E 55 Practice for Sampling Wrought Nonferrous Metals and Alloys for Determination of Chemical Composition

E 1473 Test Methods for Chemical Analysis of Nickel, Cobalt, and High-Temperature Alloys

3. Terminology

3.1 *Definitions of Terms Specific to This Standard:*

3.1.1 *rod*— product of round solid section furnished in straight lengths.

TABLE 1
PERMISSIBLE VARIATIONS IN LENGTH OF RODS

Random mill lengths	2 to 12 ft (610 to 3660 mm) long with not more than 25 weight % under 4 ft (1.22 m).
Multiple lengths	Furnished in multiples of a specified unit length, within the length limits indicated above. For each multiple, an allowance of $^{1}/_{4}$ in. (6.35 mm) shall be made for cutting, unless otherwise specified. At the manufacturer's option, individual specified unit lengths may be furnished.
Nominal lengths	Specified nominal lengths having a range of not less than 2 ft (610 mm) with no short lengths allowed.
Cut lengths	A specified length to which all rods shall be cut with a permissible variation of $+\,^{1}/_{8}$ in. (3.17 mm) – 0.

4. Ordering Information

4.1 It is the responsibility of the purchaser to specify all requirements that are necessary for the safe and satisfactory performance of material ordered under this specification. Examples of such requirements include, but are not limited to, the following:

4.1.1 *Alloy.*

4.1.2 *Dimensions* — Nominal diameter and length. The shortest usable multiple length shall be specified (Table 1).

4.1.3 *Certification* — Certification and a report of test results are required (Section 15).

4.1.4 *Purchaser Inspection* — State which tests or inspections are to be witnessed (Section 13).

4.1.5 *Samples for Product (Check) Analysis* — State whether samples should be furnished (9.2.2).

TABLE 2
CHEMICAL REQUIREMENTS

Element	Composition Limits, %
Boron	0.015 max
Carbon	0.02–0.10
Chromium	23.5–27.5
Iron	1.0–5.0
Manganese	0.1–1.5
Molybdenum	4.0–6.0
Nitrogen	0.03–0.12
Nickel	7.0–11.0
Phosphorous	0.030 max
Sulfur	0.020 max
Silicon	0.05–1.00
Tungsten	1.0–3.0
Cobalt	Remainder[A]

[A] See 12.1.1.

TABLE 3
PRODUCT (CHECK) ANALYSIS TOLERANCES

Element	Tolerance Over the Max or Under the Min Limit, %
Boron	0.005
Carbon	0.005 under min
	0.01 over max
Chromium	0.25 under min
	0.30 over max
Iron	0.05 under min
	0.07 over max
Manganese	0.03 under min
	0.04 over max
Molybdenum	0.10 under min
	0.15 over max
Nickel	0.15 under min
	0.20 over max
Phosphorus	0.005
Sulfur	0.003
Silicon	0.01 under min
	0.05 over max
Tungsten	0.04 under min
	0.10 over max

5. Chemical Composition

5.1 The material shall conform to the chemical composition requirements prescribed in Table 2.

5.2 If a product (check) analysis is made by the purchaser, the material shall conform to the requirements specified in Table 2 subject to the permissible tolerances given in Table 3.

6. Mechanical Properties and Other Requirements

6.1 The mechanical properties of the material at room temperature shall conform to those given in Table 4.

TABLE 4
MECHANICAL PROPERTY REQUIREMENTS

Tensile Strength, min, ksi (MPa)	130 (896)
Yield Strength, min, ksi (MPa)	55 (379)
Elongation in 2 in. (50.8 mm) or $4D^A$, min, %	15

[A] *D* refers to the diameter of the tension specimen.

7. Dimensions, Mass, and Permissible Variations

7.1 *Diameter* — The permissible variations from the specified diameter shall be as prescribed in Table 5.

7.2 *Out-of-Roundness* — The permissible variation in roundness shall be as prescribed in Table 5.

7.3 *Machining Allowances* — When the surfaces of finished material are to be machined, the following allowances are suggested for normal machining operations:

7.3.1 *As-Finished (Annealed and Descaled)* — For diameters of $^{5}/_{16}$ to $^{11}/_{16}$ in. (7.94 to 17.46 mm) inclusive, an allowance of $^{1}/_{16}$ in. (1.59 mm) on the diameter should be made for finish machining.

7.4 *Length:*

7.4.1 Unless multiple, nominal, or cut lengths are specified, random mill lengths shall be furnished.

7.4.2 The permissible variations in length of multiple, nominal, or cut length rod shall be as prescribed in Table 1. Where rods are ordered in multiple lengths, a $^{1}/_{4}$-in. (6.35-mm) length addition shall be permitted for each uncut multiple length.

7.5 *Ends:*

7.5.1 Rods ordered to random or nominal lengths shall be furnished with either cropped or sawed ends.

7.5.2 Rods ordered to cut lengths shall be furnished with square saw cut or machined ends.

7.6 *Weight* — For the purposes of calculating the weight of the material covered by this specification, a density of 0.306 lb/in.^{3} (8.48 g/cm^3) shall be used.

7.7 *Straightness* — The maximum curvature (depth of chord) shall not exceed 0.050 in. multiplied by the length of the chord in feet (0.04 mm multiplied by the length in centimetres).

8. Workmanship, Finish, and Appearance

8.1 The material shall be uniform in quality and condition, smooth, and free of injurious defects.

9. Sampling

9.1 *Lots for Chemical and Mechanical Testing:*

9.1.1 A lot for chemical analysis shall consist of one heat.

TABLE 5
PERMISSIBLE VARIATIONS IN DIAMETER AND OUT-OF-ROUNDNESS OF FINISHED RODS

Specified Diameter, in. (mm)	Permissible Variations, in. (mm)		
	Diameter		
	+	−	Out-of-Roundness, max
Hot-Finished, Annealed, and Descaled Rods			
3/16 to 7/16 (4.76–11.11), incl	0.012 (0.30)	0.012 (0.30)	0.018 (0.46)
Over 7/16 to 5/8 (11.11–15.87), incl	0.014 (0.36)	0.014 (0.36)	0.020 (0.51)
Over 5/8 to 3/4 (15.87–19.05), excl	0.016 (0.41)	0.016 (0.41)	0.024 (0.61)
Hot-Finished, Annealed, and Ground or Turned Rods			
3/4 to 3 1/2 (19.05–88.9), incl	0.010 (0.25)	0	0.008 (0.20)

9.1.2 A lot of bar for mechanical testing shall be defined as the material from one heat in the same condition and specified diameter.

9.2 *Sampling for Chemical Analysis:*

9.2.1 A representative sample shall be obtained from each heat during pouring or subsequent processing.

9.2.2 Product (check) analysis shall be wholly the responsibility of the purchaser.

9.3 *Sampling for Mechanical Testing* — A representative sample shall be taken from each lot of finished material.

10. Number of Tests and Retests

10.1 *Chemical Analysis* — One test per heat.

10.2 *Tension Tests* — One test per lot.

10.3 *Retests* — If the specimen used in the mechanical test of any lot fails to meet the specified requirements, two additional specimens shall be taken from different sample pieces and tested. The results of the tests on both of these specimens shall meet the specified requirements.

11. Specimen Preparations

11.1 Tension test specimens shall be taken from material after final heat treatment and tested in the direction of fabrication.

11.2 Tension test specimens shall be any of the standard or subsized specimens described in Test Methods E 8.

11.3 In the event of disagreement, the referee specimen shall be the largest possible round specimen described in Test Methods E 8.

12. Test Methods

12.1 The chemical composition and mechanical properties of the material as enumerated in this specification shall be determined, in case of disagreement, in accordance with the following ASTM standards:

12.1.1 *Chemical Analysis* — Test Methods E 1473. For elements not covered by Test Methods E 1473, the referee method shall be as agreed upon between the manufacturer and the purchaser. The composition of the remainder element shall be determined arithmetically by difference.

12.1.2 *Tension Test* — Test Methods E 8.

12.1.3 *Method of Sampling* — Practice E 55.

12.1.4 *Determining Significant Places* — Practice E 29.

12.2 For purposes of determining compliance with the limits in this specification, an observed or calculated value shall be rounded in accordance with the rounding method of Practice E 29:

Requirements	Rounded Unit for Observed or Calculated Value
Chemical composition hardness and tolerance (when expressed in decimals)	Nearest unit in the last right-hand place of figures of the specified limit
Tensile strength and yield strength	Nearest 1000 psi (7 MPa)
Elongation	Nearest 1%

13. Inspection

13.1 Inspection of the material shall be made as agreed upon between the manufacturer and the purchaser as part of the purchase contract.

14. Rejection and Rehearing

14.1 Material evaluated by the purchaser that fails to conform to the requirements of this specification may be rejected. Rejection should be reported to the producer or supplier promptly and in writing. In case of dissatisfaction with the results of the test, the producer or supplier may make claim for a rehearing.

15. Certification

15. A manufacturer's certification shall be furnished to the purchaser stating that material has been manufactured, tested, and inspected in accordance with this specification, and that the test results on representative samples meet specification requirements. A report of the test results shall be furnished.

16. Product Marking

16.1 Each piece of material ½ in. (12.7 mm) and over in diameter shall be marked with this specification number, manufacturer's identification, and size of the product.

16.2 Each bundle or shipping container shall be marked with this specification number; the size; gross, tare, and net weight; consignor and consignee address; contract or order number; and such other information as may be defined in the contract or order.

17. Keywords

17.1 rod; R31233

APPENDIX

(Nonmandatory Information)

X1. HEAT TREATMENT

X1.1 Proper heat treatment during or subsequent to fabrication is necessary for optimum performance, and the manufacturer shall be consulted for details.

SPECIFICATION FOR COBALT-CHROMIUM-NICKEL-MOLYBDENUM-TUNGSTEN ALLOY (UNS R31233) PLATE, SHEET, AND STRIP

SB-818

(Identical with ASTM Specification B 818-98a except for requiring a report of the test results.)

1. Scope

1.1 This specification covers cobalt-chromium-nickel-molybdenum-tungsten alloy UNS R31233 in the form of rolled plate, sheet, and strip for wear applications and general corrosion service.

1.2 The following products are covered under this specification:

1.2.1 *Sheet and Strip* — Hot or cold rolled, annealed and descaled unless solution-annealing is performed in an atmosphere yielding a bright finish.

1.2.2 *Plate* — Hot rolled, solution-annealed, and descaled.

1.3 The values stated in inch-pound units are to be regarded as the standard. The values given in parentheses are for information only.

2. Referenced Documents

2.1 *ASTM Standards:*

B 880 Specification for General Requirements for Chemical Check Analysis Limits for Nickel, Nickel Alloys, and Cobalt Alloys

E 8 Test Methods for Tension Testing of Metallic Materials

E 29 Practice for Using Significant Digits in Test Data to Determine Conformance with Specifications

E 55 Practice for Sampling Wrought Nonferrous Metals and Alloys for Determination of Chemical Composition

E 1473 Test Methods for Chemical Analysis of Nickel, Cobalt, and High-Temperature Alloys

3. Terminology

3.1 *Definitions of Terms Specific to This Standard:*

3.1.1 *plate* — material $^{3}/_{16}$ in. (4.76 mm) and over in thickness.

3.1.2 *sheet and strip* — material under $^{3}/_{16}$ in. (4.76 mm) in thickness.

4. Ordering Information

4.1 It is the responsibility of the purchaser to specify all requirements that are necessary for the safe and satisfactory performance of material ordered under this specification. Examples of such requirements include, but are not limited to, the following:

4.1.1 *Alloy.*

4.1.2 *Dimensions* — Thickness (in decimals of an inch), width, and length (inch or fraction of an inch).

4.1.3 *Certification* — A report of test results is required (see Section 15).

4.1.4 *Optional Requirement* — Plate; state how plate is to be cut (see 7.7.1 and Table 1).

4.1.5 *Purchaser Inspection* — State which tests or inspections are to be witnessed (see Section 13).

4.1.6 *Samples, for Product (Check) Analysis* — State whether samples should be furnished (see 9.2.2).

5. Chemical Composition

5.1 The material shall conform to the requirements as to chemical composition prescribed in Table 2.

5.2 If a product (check) analysis is made by the purchaser, the material shall conform to the requirements

TABLE 1
PERMISSIBLE VARIATIONS IN WIDTH OF SHEET AND STRIP

Specified Thickness, in. (mm)	Specified Width, in. (mm)	Permissible Variations in Specified Width, in. (mm) +	Permissible Variations in Specified Width, in. (mm) −
	Sheet		
0.187 (4.75) and under	2 (50.8) and over	0.125 (3.18)	0
	Strip (Slit Edges)		
Over 0.020 to 0.075 (0.51 to 1.90), incl	24 (610) and under	0.007 (0.18)	0.007 (0.18)
Over 0.075 to 0.100 (1.90 to 2.54), incl	24 (610) and under	0.009 (0.23)	0.009 (0.23)
Over 0.100 to 0.125 (2.54 to 3.18), incl	24 (610) and under	0.012 (0.30)	0.012 (0.30)

TABLE 2
CHEMICAL REQUIREMENTS

Element	Composition Limits, %
Boron	0.015 max
Carbon	0.02–0.10
Chromium	23.5–27.5
Iron	1.0–5.0
Manganese	0.1–1.5
Molybdenum	4.0–6.0
Nitrogen	0.03–0.12
Nickel	7.0–11.0
Phosphorous	0.030 max
Sulfur	0.020 max
Silicon	0.05–1.00
Tungsten	1.0–3.0
Cobalt	Remainder[A]

[A] See 12.1.1.

TABLE 3
MECHANICAL PROPERTY REQUIREMENTS

Tensile Strength, min, ksi (MPa)	130 (896)
Yield Strength, min, ksi (MPa)	55 (379)
Elongation in 2 in. (50.8 mm) or $4D$[A] min %	15

[A] D refers to the diameter of the tension specimen.

specified in Table 2 subject to the permissible tolerances per B 880.

6. Mechanical Properties and Other Requirements

6.1 *Tensile Properties* — The material shall conform to the room temperature tensile properties prescribed in Table 3.

7. Dimensions, Mass, and Permissible Variations

7.1 *Thickness:*

7.1.1 *Plate* — The permissible variations in thickness of plate shall be as prescribed in Table 4.

7.1.2 *Sheet and Strip*— The permissible variations in thickness of sheet and strip shall be as prescribed in Table 5. The thickness shall be measured with the micrometer spindle $\frac{3}{8}$ in. (9.525 mm) or more from any edge for material 1 in. (25.4 mm) or over in width and at any place on material under 1 in. in width.

7.2 *Width:*

7.2.1 *Plate* — The permissible variations in width of rectangular plates shall be as prescribed in Table 6.

7.2.2 *Sheet and Strip* — The permissible variations in width for sheet and strip shall be as prescribed in Table 1.

7.3 *Length:*

7.3.1 *Plate* — Permissible variations in the length of rectangular plate shall be as prescribed in Table 6.

7.3.2 *Sheet and Strip* — Sheet and strip may be ordered to cut lengths, in which case a variation of $\frac{1}{8}$ in. (3.175 mm) over the specified length shall be permitted, with a "0" minus tolerance.

7.4 *Straightness:*

7.4.1 The edgewise curvature (depth of chord) of flat sheet, strip, and plate shall not exceed the product of 0.05 in. multiplied by the length in feet (0.04 mm multiplied by the length in centimetres).

7.4.2 Straightness for coiled strip is subject to agreement between the manufacturer and the purchaser.

7.5 *Squareness (Sheet)* — For sheets of all thicknesses and widths of 6 in. (152.4 mm) or more, the angle between

TABLE 4
PERMISSIBLE VARIATIONS IN THICKNESS OF PLATE[A]

Specified Thickness, in. (mm)	Permissible Variations in Thickness, in. (mm)[B,C] +	−
3/16 to 7/32 (4.762 to 5.556), incl	0.021 (0.53)	0.010 (0.25)
Over 7/32 to 1/4 (5.556 to 6.350), incl	0.024 (0.61)	0.010 (0.25)
Over 1/4 to 3/8 (6.350 to 9.525), incl	0.027 (0.69)	0.010 (0.25)
Over 3/8 to 1/2 (9.525 to 12.70), incl	0.030 (0.76)	0.010 (0.25)
Over 1/2 to 5/8 (12.70 to 15.88), incl	0.035 (0.89)	0.010 (0.25)
Over 5/8 to 3/4 (15.88 to 19.05), incl	0.040 (1.02)	0.010 (0.25)
Over 3/4 to 7/8 (19.05 to 22.25), incl	0.045 (1.14)	0.010 (0.25)
Over 7/8 to 1 (22.22 to 25.4), incl	0.050 (1.27)	0.010 (0.25)
Over 1 to 2 1/2 (25.4 to 63.5), incl	5[D]	0.010 (0.25)

[A] Applicable to plate 48 in. (1219 mm) and under in width.
[B] Measured 3/8 in. (9.525 mm) or more from any edge.
[C] Buffing or grinding for removal of light surface imperfections shall be permitted. The depth of such buffed or ground areas shall not exceed the minimum tolerance thickness.
[D] Expressed as percentage of thickness.

TABLE 5
PERMISSIBLE VARIATIONS IN THICKNESS OF SHEET[A] AND STRIP

Specified Thickness, in. (mm)	Permissible Variations in Thickness, in. (mm) (All Widths)[B,C] +	−
0.020 to 0.034 (0.51 to 0.86), incl	0.004 (0.10)	0.004 (0.10)
Over 0.034 to 0.056 (0.86 to 1.42), incl	0.005 (0.13)	0.005 (0.13)
Over 0.056 to 0.070 (1.42 to 1.78), incl	0.006 (0.15)	0.006 (0.15)
Over 0.070 to 0.078 (1.78 to 1.98), incl	0.007 (0.18)	0.007 (0.18)
Over 0.078 to 0.093 (1.98 to 2.36), incl	0.008 (0.20)	0.008 (0.20)
Over 0.093 to 0.109 (2.36 to 2.77), incl	0.009 (0.23)	0.009 (0.23)
Over 0.109 to 0.125 (2.77 to 3.18), incl	0.010 (0.25)	0.010 (0.25)
Over 0.125 to 0.140 (3.18 to 3.56), incl	0.013 (0.33)	0.010 (0.25)
Over 0.140 to 0.171 (3.56 to 4.34), incl	0.016 (0.41)	0.010 (0.25)
Over 0.171 to 0.187 (4.34 to 4.75), incl	0.018 (0.46)	0.010 (0.25)

[A] Applicable to sheet 48 in. (1219 mm) and under in width.
[B] Measured 3/8 in. (9.525 mm) or more from any edge.
[C] Buffing for removal of light surface imperfections shall be permitted. The depth of such buffed areas shall not exceed the permissible minus variation.

adjacent sides shall be 90 ± 0.15° (1/16 in. in 24 in. or 2.6 mm/m).

7.6 *Flatness* — Plate, sheet, and strip shall be commercially flat.

7.7 *Edges:*

7.7.1 Plates shall have sheared, abrasive cut, or plasma torch-cut edges as specified.

7.7.2 Sheet and strip shall have sheared or slit edges.

8. Workmanship, Finish, and Appearance

8.1 The material shall be uniform in quality and condition, smooth, and free of injurious defects.

9. Sampling

9.1 *Lots for Chemical Analysis and Mechanical Testing:*

9.1.1 A lot for chemical analysis shall consist of one heat.

TABLE 6
PERMISSIBLE VARIATIONS IN WIDTH AND LENGTH OF SHEARED, PLASMA-TORCH-CUT, OR ABASIVE CUT RECTANGULAR PLATE

Specified Thickness	Permissible Variations in Widths and Lengths for Dimensions Given, in. (mm)			
	Up to 30 (760), incl		Over 30 (760)	
	+	−	+	−
Inches				
Sheared:				
3/16 to 5/16, excl	3/16	1/8	1/4	1/8
5/16 to 1/2, incl	1/4	1/8	3/8	1/8
Abrasive cut:				
3/16 to 1 1/2, incl	1/16	1/16	1/16	1/16
Over 1 1/2 to 2 1/2, incl	1/8	1/8	1/8	1/8
Plasma-torch-cut:[A]				
3/16 to 2, excl	1/2	0	1/2	0
2 to 3, incl	1/8	0	3/8	0
Millimeters				
Sheared:				
4.76 to 7.94, excl	4.76	3.18	6.35	3.18
7.94 to 12.70, incl	6.35	3.18	9.52	3.18
Abrasive cut:				
4.76 to 38.1, incl	1.59	1.59	1.59	1.59
Over 38.1 to 63.5, incl	3.18	3.18	3.18	3.18
Plasma-torch-cut:[A]				
4.8 to 50.8, excl	12.7	0	12.7	0
50.8 to 76.2, incl	15.9	0	15.9	0

[A] The tolerance spread shown for plasma-torch-cutting may be obtained all on the minus side, or divided between the plus and the minus side if so specified by the purchaser.

9.1.2 A lot of plate, sheet, or strip for mechanical testing shall be defined as the material from one heat in the same condition and specified thickness.

9.2 *Sampling for Chemical Analysis:*

9.2.1 A representative sample shall be obtained from each heat during pouring or subsequent processing.

9.2.2 Product (check) analysis shall be wholly the responsibility of the purchaser.

9.3 *Sampling for Mechanical Testing*— Representative samples shall be taken from each lot of finished material.

10. Number of Tests and Retests

10.1 *Chemical Analysis* — One test per heat.

10.2 *Tension Tests* — One test per lot.

10.3 *Retests* — If one of the specimens used in the above tests of any lot fails to meet the specified requirements, two additional specimens shall be taken from different sample pieces and tested. The results of the tests on both of these specimens shall meet the specified requirements.

11. Specimen Preparation

11.1 Tension test specimens shall be taken from material in the final condition and tested transverse to the direction of rolling when width will permit.

11.2 Tension test specimens shall be any of the standard or subsize specimens shown in Test Methods E 8.

11.3 In the event of disagreement, referee specimens shall be as follows:

11.3.1 Full thickness of the material, machined to the form and dimensions shown for the sheet-type specimen in Test Methods E 8 for material under 1/2 in. (12.7 mm) in thickness.

11.3.2 The largest possible round specimen shown in Test Methods E 8 for material 1/2 in. (12.7 mm) and over.

12. Test Methods

12.1 The chemical composition and mechanical properties of the material as enumerated in this specification

shall be determined, in case of disagreement, in accordance with the following ASTM test methods:

12.1.1 *Chemical Analysis* — Test Methods E 1473. For elements not covered by Test Methods E 1473, the referee method shall be as agreed upon between the manufacturer and the purchaser. The composition of the remainder element shall be determined arithmetically by difference.

12.1.2 *Tension Test* — Test Methods E 8.

12.1.3 *Determining Significant Places* — Practice E 29.

12.1.4 *Method of Sampling* — Practice E 55.

12.2 For purposes of determining compliance with the limits in this specification, an observed value or calculated value shall be rounded in accordance with the rounding method of Practice E 29:

Requirements	Rounded Unit for Observed or Calculated Value
Chemical composition hardness and tolerance (when expressed in decimals)	Nearest unit in the last right-hand place of figures of the specified limit
Tensile strength and yield strength	Nearest 1000 psi (7 MPa)
Elongation	Nearest 1%

13. Inspection

13.1 Inspection of the material by the purchaser at the place of manufacture shall be made as agreed upon between the purchaser and the manufacturer as part of the purchase contract.

14. Rejection and Rehearing

14.1 Material, evaluated by the purchaser, that fails to conform to the requirements of this specification may be rejected. Rejection should be reported to the producer or supplier promptly and in writing. In case of dissatisfaction with the results of the test, the producer or supplier may make claim for a rehearing.

15. Certification

15.1 A manufacturer's certification shall be furnished to the purchaser stating that material has been manufactured, tested, and inspected in accordance with this specification, and that the test results on representative samples meet specification requirements. A report of the test results shall be furnished.

16. Product Marking

16.1 Each plate, sheet, or strip shall be marked on one face with the specification number, heat number, manufacturer's identification, and size. The markings shall have no deleterious effect on the material or its performance and shall be sufficiently stable to withstand normal handling.

16.2 Each bundle or shipping container shall be marked with this specification number; the size; gross, tare, and net weight; consignor and consignee address; contract or order number; and such other information as may be defined in the contract or order.

17. Keywords

17.1 plate; sheet; strip; R31233

APPENDIX

(Nonmandatory Information)

X1. HEAT TREATMENT

X1.1 Proper heat treatment during or subsequent to fabrication is necessary for optimum performance, and the manufacturer shall be consulted for details.

SPECIFICATION FOR GENERAL REQUIREMENTS FOR COPPER ALLOY CASTINGS

SB-824

(Identical with ASTM Specification B 824-96 for the applicable specifications except for mandatory certification, the deletion of the Supplementary Requirements for government procurement, and some editorial changes.)

1. Scope

1.1 This specification establishes a group of general requirements common to ASTM copper alloy casting specifications B 22, B 61, B 62, B 66, B 67, B 148, B 176, B 271, B 369, B 427, B 505, B 584, B 763, B 770, and B 806. These requirements apply to the casting specifications to the extent referenced therein. In the event of conflict between this specification and a casting specification, the requirements of the casting specification shall take precedence.

1.2 The chemical composition and other requirements not included in this specification shall be prescribed in the casting specifications.

1.3 The values stated in inch-pound units are the standard. SI values given in parentheses are for information only.

1.4 No precise quantitative relationship can be stated between the properties of the metal in various locations of the same casting or between the properties of castings and those of a test bar casting from the same metal. (See Appendix X1.)

2. Referenced Documents

2.1 The following documents, of the issue in effect on date of casting purchase, form, part of this specification to the extent referenced herein:

2.1.1 *ASTM Standards:*

B 22 Specification for Bronze Castings for Bridges and Turntables

B 66 Specification for Bronze Castings for Steam Locomotive Wearing Parts

B 67 Specification for Car and Tender Journal Bearings, Lined

B 176 Specification for Copper-Alloy Die Castings

B 194 Specification for Copper-Beryllium Alloy Plate, Sheet, Strip, and Rolled Bar

B 208 Practice for Preparing Tension Test Specimens for Copper-Base Alloys for Sand, Permanent Mold, Centrifugal, and Continuous Castings

B 427 Specification for Gear Bronze Alloy Castings

B 763 Specification for Copper Alloy Sand Castings for Valve Application

B 770 Specification for Copper-Beryllium Alloy Sand Castings for General Applications

B 806 Specification for Copper Alloy Permanent Mold Castings for General Applications

E 8 Test Methods for Tension Testing of Metallic Materials

E 29 Practice for Using Significant Digits in Test Data to Determine Conformance With Specifications

E 44 Definitions of Terms Relating to Heat Treatment of Metals

E 54 Test Methods for Chemical Analysis of Special Brasses and Bronzes

E 62 Test Methods for Chemical Analysis of Copper and Copper Alloys (Photometric Methods)

E 76 Test Methods for Chemical Analysis of Nickel-Copper Alloys

E 478 Test Methods for Chemical Analysis of Copper Alloys

E 581 Test Methods for Chemical Analysis of Manganese-Copper Alloys

2.1.2 *ASME Standards:*

SB-61 Specification for Steam or Valve Bronze Castings

SB-62 Specification for Composition Bronze or Ounce Metal Castings

SB-148 Specification for Aluminum-Bronze Sand Castings

SB-271 Specification for Copper-Base Alloy Centrifugal Castings
SB-369 Specification for Copper-Nickel Alloy Castings
SB-505 Specification for Copper-Base Alloy Continuous Castings
SB-584 Specification for Copper Alloy Sand Castings for General Applications

3. Terminology

3.1 *Definitions:*

3.1.1 *casting, n* — a general term for a metal object produced at or near finished shape by pouring or otherwise introducing molten metal into a mold and allowing it to solidify.

3.1.2 *casting, centrifugal, n* — a casting produced in a cylindrical mold rotating on its axis with the major axis of the product coinciding with the axis of rotation. The axis of rotation may be horizontal, vertical, or any angle in between.

3.1.3 *casting, centrifuged, n* — a casting produced in a mold, a number of which may be mounted around a central sprue. The molds are rotated in a vertical position, about a central axis concentric with the central sprue.

3.1.4 *casting, continuous, n* — a casting produced by the continuous pouring and solidification of molten metal through a water-cooled mold that determines the cross-sectional shape. The length of the product is not restricted by mold dimensions.

3.1.5 *casting, die, n* — a casting produced in a reusable metal mold (die) characterized by a high degree of fidelity to the mold cavity with the molten metal being introduced under high pressure.

3.1.6 *casting, lost wax, n* — a casting produced in a sacrificial mold made of various layers and grades of refractory powders and washes having been invested about a wax pattern. The casting is characterized by a high degree of fidelity to the original pattern.

3.1.7 *casting, plaster mold, n* — a casting produced in a sacrificial mold made of various grades of fine plaster-like material and having a high degree of fidelity to the original pattern.

3.1.8 *casting, permanent mold, n* — a product produced in a reusable mold constructed of a durable material, usually iron or steel, with the molten metal being introduced by gravity, low pressure, or vacuum.

3.1.9 *casting, sand, n* — a casting produced in a sacrificial sand mold. The sand may be bonded by various mechanical or chemical means.

3.1.10 *casting, semicentrifugal, n* — a casting produced in a manner similar to the centrifugal casting except that a central core is used to allow the formation of other than a cylindrical inside surface. The axis of rotation is always vertical.

4. Materials and Manufacture

4.1 *Manufacture:*

4.1.1 Mechanical properties of Copper Alloy UNS Nos. C94700, C95300, C95400, C95410, C95500, C95520, and C96800 can be changed by heat treatment. Suggested heat treatments are given in the casting specifications containing these alloys.

4.1.2 Definitions of terms relating to heat treating are given in Definitions E 44.

5. Chemical Composition

5.1 The material shall conform to the chemical requirements of the casting specification.

5.2 These specification limits do not preclude the presence of other elements. Limits may be established and analysis required for unnamed elements by agreement between the manufacturer and the purchaser.

6. Mechanical Properties

6.1 When tension testing is required by the casting specification, results shall conform to the requirements of that specification.

7. Other Requirements

7.1 When specified in the purchase order, castings shall be hydrostatically tested. The details of the test and acceptance criteria shall be agreed upon between the manufacturer and the purchaser.

7.2 When specified in the purchase order, castings shall meet soundness standards furnished or referenced by the purchaser. In the absence of standards for soundness, the requirement shall be as agreed upon between the manufacturer and the purchaser.

8. Dimensions, Mass, and Permissible Variations

8.1 The manufacturer shall be responsible for the dimensional accuracy of the castings as related to the drawing when the pattern equipment is produced by the manufacturer.

8.2 When the pattern equipment is provided by the purchaser, the manufacturer shall be responsible for the dimensional accuracy of the casting as related to the provided pattern equipment.

8.3 Where thick and thin sections of the casting join, the manufacturer shall be permitted to add fillets of adequate size, where not previously provided, subject to approval of the purchaser.

9. Workmanship, Finish, and Appearance

9.1 The surface of the casting shall be free of adhering sand, cracks, and hot tears. Other surface discontinuities shall meet visual acceptance standards agreed upon between the manufacturer and the purchaser.

10. Sampling

10.1 *Lot:*

10.1.1 A lot shall consist of: *(1)* all of the metal poured from a single furnace or crucible melt, or *(2)* all the metal poured from two or more furnaces into a single ladle, or *(3)* all of the metal poured from a continuous melting furnace between charges, or *(4)* all of the metal poured from an individual melting furnace or group of melting furnaces having a uniform melting stock, operating during the course of one-half shift, not to exceed 5 h.

10.1.2 The sample for chemical analysis shall be obtained during the pouring of the lot in such a manner as to be representative of the lot.

10.1.3 Tension test bars used in meeting the requirements of 6.1 may be either separately cast or removed from the casting. When tension test bars are separately cast, they shall be poured from the same lot as the castings represented to the form and dimensions specified in the casting specification and Practice B 208.

10.1.3.1 When the requirements of 6.1 have been complied with using separately cast test bars, additional tests may be performed using test bars removed from the casting with test bar location and mechanical properties agreed upon between the manufacturer and the purchaser.

11. Number of Tests and Retests

11.1 *Tests:*

11.1.1 A chemical analysis of each element with a specified limiting value shall be made on each lot. Chemical analysis for residual elements is not required unless specified in the purchase order.

11.1.2 One tension test shall be performed on each lot.

11.1.3 Should the percent elongation of any tensile test specimen be less than that specified and any part of the fracture is outside the middle two-thirds of the gage length or in a punched or scribed mark within the reduced section, the specimen may be discarded and replaced by another from the same lot.

11.1.4 If the result of any test fails to conform to the specified requirements, two retests shall be performed. If either retest fails to meet the specified requirements, the lot shall be rejected.

11.2 *Retests:*

11.2.1 When requested by the manufacturer, a retest shall be permitted when test results obtained by the purchaser fail to conform to the casting specification requirements.

11.2.2 Retesting shall be as prescribed in the casting specification for the initial test except for the number of test specimens that shall be twice that normally required for the test. Test results for all specimens shall comply with the casting specification requirements. Failure to comply shall be cause for rejection.

12. Specimen Preparation

12.1 The specimen for chemical analysis shall be taken from the lot in such a manner as to avoid contamination and be representative of the molten metal.

12.2 Tension test specimens shall be prepared in accordance with Practice B 208.

12.2.1 Should any specimen be machined improperly or should flaws be revealed by machining or during testing, the specimen may be discarded and replaced by another from the same lot.

13. Test Methods

13.1 *Chemical Composition:*

13.1.1 The chemical analysis methods used for the routine determination of specification compliance and preparation of test reports shall be at the discretion of the laboratory performing the analysis.

13.1.2 In case of disagreement on chemical composition, referee analytical methods for copper alloys other than copper-beryllium alloys (Specification B 770) are given in Table 1. Referee analytical methods for copper-beryllium alloys are given in the Annex of ASTM Specification B 194.

TABLE 1
REFEREE CHEMICAL ANALYTICAL METHODS

Element	Range or % max	Test Methods
Aluminum (Al)	0.005–13.5	E 478
Antimony (Sb)	0.05–0.70	E 62
Arsenic (As)	0.0–0.50	E 62
Carbon (C)	0.0–0.50	E 76
Copper (Cu)	50.0–99.75	E 478
Iron (Fe)	0.003–1.25	E 478
	0.0–5.0	E 54
Lead (Pb)	0.002–15.0	E 478; Atomic Absorption
	2.0–30.0	E 478; Titrimetric
Manganese (Mn)	0.10–12.0	E 62
	12.0–23.0	E 581
Nickel (Ni) [incl Cobalt (Co)]	0.0–5.0	E 478; Photometric
Phosphorus (P)	0.01–1.0	E 62
Silicon (S)	0.005–5.50	E 54; Perchloric Acid Dehydration
Sulfur (S)	0.05–0.08	E 76; Direct Combustion
Tin (Sn)	0.01–1.0	E 478; Photometric
	0.50–20.0	E 478; Titrimetric
Zinc (Zn)	0.02–2.0	E 478; Atomic Absorption
	2.0–40.0	E 478; Titrimetric

13.1.3 The determination of magnesium, niobium, zirconium, and titanium, for which no recognized test method is known to be published, shall be subject to agreement between the manufacturer and the purchaser.

13.1.4 Analytical methods for elements whose ranges are beyond those given in Table 1 shall be subject to agreement between the manufacturer and the purchaser.

13.1.5 Analytical methods for the determination of elements required by the purchase order agreement shall be as agreed upon between the manufacturer and the purchaser.

13.2 *Mechanical Properties:*

13.2.1 Tension testing shall be performed in accordance with Test Methods E 8.

14. Significance of Numerical Limits

14.1 For purposes of determining compliance with the specified limits for chemical composition and mechanical properties, an observed or calculated value shall be rounded as indicated in accordance with the Rounding-Off method of Practice E 29:

Property	Rounded Limit for Observed or Calculated Value
Chemical composition	Nearest unit in the last right-hand significance digit used in expressing the limiting value
Tensile strength	Nearest ksi (5 MPa)
Yield strength	Nearest ksi (5 MPa)
Elongation 5% and over	Nearest 1%

15. Inspection

15.1 The manufacturer shall inspect and make tests necessary to verify that the product furnished conforms to the specified requirements.

15.2 The purchaser may have a representative inspect or witness the inspection and testing of the material prior to shipment. Such an arrangement shall be made by the purchaser and the manufacturer as part of the purchase order. When such inspection or witness of inspection and testing is agreed upon, the manufacturer shall afford the purchaser's representative all reasonable facilities necessary to confirm that the product meets the requirements

of the purchase order. The purchaser's inspection and tests shall be conducted in such a manner that they will not interfere unnecessarily with the manufacturer's operation.

16. Rejection and Rehearing

16.1 *Rejection:*

16.1.1 Castings that fail to comply with the requirements of the casting specification when tested by the purchaser may be rejected.

16.1.2 Rejection shall be reported to the manufacturer promptly and in writing.

16.1.3 In case of disagreement or dissatisfaction with the results of the test upon which rejection was based, the manufacturer or supplier may make claim for a rehearing.

16.2 *Rehearing:*

16.2.1 As a result of casting rejection, the manufacturer or supplier may make claim for retesting to be conducted by the manufacturer or supplier and the purchaser. Samples of the rejected castings shall be taken in accordance with the casting specification and tested by both parties in accordance with the casting specification, or alternatively, upon agreement between the manufacturer or supplier and the purchaser and independent laboratory may be selected to perform the test prescribed in the casting specification. The number of specimens to be retested shall be as given in 11.2.

17. Certification

17.1 A manufacturer's certificate of compliance shall be furnished to the purchaser stating that samples representing each lot have been tested and inspected in accordance with the material specification and the requirements have been met.

18. Test Report

18.1 When specified in the purchase order, the manufacturer or supplier shall furnish to the purchaser a manufacturer's test report showing the results of the required tests, including chemical analysis.

19. Product Marking

19.1 Castings shall be marked as shown on the drawing or as prescribed in the purchase order.

19.2 When specified in the purchase order, the castings shall be marked with the manufacturer's name or identifying mark and pattern number or mark at a location on the casting where it will not be removed in machining to finished dimensions.

19.3 The marking of lot identification numbers shall be agreed upon between the manufacturer and the purchaser.

19.4 Castings containing bismuth or bismuth-selenium additives shall be marked with the identification BI or B depending on available space. This marking shall be at a location on the casting so as not to injure the usefulness of the casting and where it will not be removed during machining while concurrently enabling scrap castings to be segregated and prevented from entering the unregulated scrap metal stream.

20. Packaging and Package Marking

20.1 The material shall be separated by size, composition, and temper, and prepared for shipment in such a manner as to insure acceptance by common carrier for transportation and to afford protection from the normal hazards of transportation.

20.2 Each shipping unit shall be legibly marked with the purchase order number, metal or alloy designation, temper, size, gross and net weight, and name of supplier. The specification number shall be shown, when specified in the purchase order.

21. Keywords

21.1 copper alloy castings; copper-base alloy castings

APPENDIX

(Nonmandatory Information)

X1. MECHANICAL PROPERTIES OF CASTINGS

X1.1 The mechanical properties of copper alloy castings are influenced by the cooling rate during and after solidification, by chemical composition, by heat treatment, by the design and nature of the mold, by the location and effectiveness of gates and risers, and by certain other factors.

X1.2 The cooling rate in the mold and, therefore, the properties developed in any particular casting section are influenced by the presence of cores, chills and chaplets, changes in section thickness, and the existence of bosses, projections, and intersections, such as junctions of ribs and bosses. Because of the interactions of these factors, no precise quantitative relationship can be stated between the properties of the metal in various locations of the same casting or between the properties of a casting and those of a separately cast test bar.

SPECIFICATION FOR GENERAL REQUIREMENTS FOR NICKEL AND NICKEL ALLOYS SEAMLESS PIPE AND TUBE

SB-829

(Identical with ASTM Specification B 829-99 except that certification has been made mandatory.)

1. Scope

1.1 This specification contains various requirements that, with the exception of Sections 5 and 10, are mandatory requirements to the following ASTM nickel and nickel alloy, seamless pipe and tube specifications.

Title of Specification	ASTM Designation
Nickel Seamless Pipe and Tube	B 161
Seamless Nickel and Nickel Alloy, Condenser and Heat Exchanger Tubes	B 163
Nickel-Copper Alloy (UNS N04400) Seamless Pipe and Tube	B 165
Nickel-Chromium-Iron Alloys (UNS N06600, N06601, and N06690) Seamless Pipe and Tube	B 167
Nickel-Iron-Chromium Alloy Seamless Pipe and Tube	B 407
Nickel-Iron-Chromium-Molybdenum-Copper Alloy (UNS N08825 and N08221) Seamless Pipe and Tube	B 423
Nickel-Chromium-Molybdenum-Columbium Alloys (UNS N06625) Pipe and Tube	B 444
Nickel-Chromium-Iron-Columbium-Molybdenum-Tungsten Alloy (UNS N06102) Seamless Pipe and Tube	B 445
Nickel-Iron-Chromium-Silicon Alloys (UNS N08330 and UNS N08332) Seamless Pipe	B 535
Copper-Beryllium Alloy Forgings and Extrusion	B 570
Seamless Nickel and Nickel-Cobalt Alloy Pipe and Tube	B 622
UNS N08028 Seamless Tubes	B 668
UNS N08904, UNS N08925, and UNS N08926 Seamless Pipe and Tube	B 677
Iron-Nickel-Chromium-Molybdenum Alloys (UNS N08366 and UNS N08367) Seamless Pipe and Tube	B 690
Ni-Cr-Mo-Co-W-Fe-Si Alloy (UNS N06333) Seamless Pipe and Tube	B 722
Seamless UNS N08020, UNS N08026, and UNS N08024 Nickel-Alloy Pipe and Tube	B 729

1.2 One or more of the test requirements of Section 5 apply only if specifically stated in the product specification or in the purchase order.

1.3 In case of conflict between a requirement of the product specification and a requirement of this general specification, only the requirement of the product specification needs to be satisfied.

1.4 The values stated in inch-pound units are to be regarded as the standard. The values given in parentheses are for information only.

1.5 The following safety hazards caveat pertains only to the test requirements portion, Section 5, of this specification: *This standard does not purport to address all of the safety concerns, if any, associated with its use. It is the responsibility of the user of this standard to establish appropriate safety and health practices and determine the applicability of regulatory limitations prior to use.*

2. Referenced Documents

2.1 *ASTM Standards:*

B 880 Specification for General Requirements for Chemical Check Analysis Limits for Nickel, Nickel Alloys and Cobalt Alloys

E 8 Test Methods for Tension Testing of Metallic Materials
E 18 Test Methods for Rockwell Hardness and Rockwell Superficial Hardness of Metallic Materials
E 29 Practice for Using Significant Digits in Test Data to Determine Conformance With Specifications
E 39 Test Methods for Chemical Analysis of Nickel
E 76 Test Methods for Chemical Analysis of Nickel-Copper Alloys
E 112 Test Methods for Determining Average Grain Size
E 213 Practice for Ultrasonic Examination of Metal Pipe and Tubing
E 426 Practice for Electromagnetic (Eddy-Current) Examination of Seamless and Welded Tubular Products, Austenitic Stainless Steel and Similar Alloys
E 571 Practice for Electromagnetic (Eddy-Current) Examination of Nickel and Nickel Alloy Tubular Products
E 1473 Test Methods for Chemical Analysis of Nickel, Cobalt, and High-Temperature Alloys

2.2 *ANSI Standards:*
B 1.20.1 Pipe Threads
B 36.10 Welded and Seamless Wrought Steel Pipe
B 36.19 Stainless Steel Pipe

3. Terminology

3.1 *Definitions:*

3.1.1 *average diameter, n* — the average of the maximum and minimum outside diameters, as determined at any one cross section of the pipe or tube.

3.1.2 *nominal wall, n* — a specified wall thickness with a plus or minus tolerance from the specified thickness.

3.1.3 *seamless pipe, n* — a round hollow produced with a continuous periphery in all stages of manufacture, and produced to the particular dimensions commercially known as pipe size (NPS).

3.1.4 *seamless tube, n* — a tube produced with a continuous periphery in all stages of the operation.

3.1.5 *thin wall tube, n* — tube with specified wall thickness 3% or less of the specified outside diameter.

4. Chemical Composition

4.1 In case of disagreement, the chemical composition shall be determined in accordance with the following method:

UNS No. Prefixes	ASTM Method
N02	E 39
N04	E 76
N06, N08	E 1473

4.2 The ladle analysis of the material shall conform to the chemical requirements prescribed by the individual product specification.

4.3 The product (check) analysis of the material shall meet the requriements for the ladle analysis within the tolerance limits prescribed in B 880.

5. Test Requirements

5.1 *Flare Test* — The flare test shall consist of flaring a test specimen with an expanding tool having an included angle of 60° until the specified outside diameter has been increased by 30%. The flared specimen shall not exhibit cracking through the wall.

5.2 *Hydrostatic Test* — Each pipe or tube shall be tested by the manufacturer to an internal hydrostatic pressure of 1000 psi (6.9 MPa) provided that the fiber stress, calculated from the following equation, does not exceed the allowable fiber stress for the material:

$$P = 2St/D \quad (1)$$

where:

P = hydrostatic test pressure, psi (MPa),
S = allowable fiber stress, for material in the condition (temper) furnished as specified in the product specification (S is calculated as the lower of $\frac{2}{3}$ of the specified minimum 0.2% offset yield strength or $\frac{1}{4}$ of the specified minimum ultimate strength for the material),
t = minimum wall thickness permitted, in. (mm), including minus tolerance, if any, and
D = nominal outside diameter of the pipe or tube, in. (mm)

5.2.1 The test pressure must be held for a minimum of 5 s.

NOTE 1 — Testing at a pressure greater than 1000 psi may be performed upon agreement between purchaser and manufacturer provided that the allowable fiber stress is not exceeded.

5.2.2 If any pipe or tube shows leaks during hydrostatic testing, it shall be rejected.

5.3 *Nondestructive Electric Test:*

5.3.1 *Eddy Current Testing* — Testing shall be conducted in accordance with Practices E 426 or E 571. The eddy current examination reference in this specification has the capability of detecting significant discontinuities, especially of the short, abrupt type.

5.3.1.1 Unless otherwise specified by the purchaser, the calibration standard shall contain, at the option of the manufacturer, any one of the following discontinuities to establish a minimum sensitivity level for rejection.

5.3.1.2 *Drill Hole* — A hole not larger than 0.031 in. (0.79 mm) in diameter shall be drilled radially and completely through the wall, care being taken to avoid distortion of the material while drilling.

5.3.1.3 *Transverse Tangential Notch* — Using a round file or tool with a $\frac{1}{4}$ in. (6 mm) diameter, a notch shall be filed or milled on the tube or pipe outside diameter tangential to the surface and transverse to the longitudinal axis of the material. Said notch shall have a depth not exceeding 12.5% of the specified wall thickness of the material, or 0.004 in. (0.10 mm), whichever is greater.

5.3.2 *Ultrasonic Testing* — Testing shall be conducted in accordance with Practice E 213. The ultrasonic examination referred to in this specification is intended to detect longitudinal discontinuities having a reflective area similar to or larger than the calibration reference notches specified in 5.3.2.1. The examination may not detect circumferentially oriented imperfections or short, deep defects.

5.3.2.1 For ultrasonic testing, longitudinal calibration notches shall be machined on the outside and inside diameter surfaces. The depth of the notches shall not exceed 12.5% of the specified wall thickness or 0.004 in. (0.10 mm), whichever is greater.

5.3.3 *Calibration Frequency* — The frequency of calibration checks shall be as follows:

5.3.3.1 At the beginning of each production run or lot.

5.3.3.2 At least every four hours during testing.

5.3.3.3 At the end of each production run or lot.

5.3.3.4 After any suspected equipment malfunction or work stoppage.

5.3.3.5 If, during any check, the equipment fails to detect the calibration defects, the instrument must be recalibrated and all material tested since the last satisfactory check shall be retested.

5.3.4 *Acceptance and Rejection* — Material producing a signal equal to or greater than the calibration defect shall be subject to rejection.

5.3.4.1 Test signals produced by imperfections that cannot be identified or produced by cracks or crack-like imperfections shall result in rejection of the tube, subject to rework and retest.

5.3.4.2 If the imperfection is judged as not fit for use, the tube shall be rejected, but may be reconditioned and retested providing the wall thickness requirements are met. To be accepted, retested material shall meet the original electric test requirements.

5.3.4.3 If the imperfection is explored to the extent that it can be identified and the pipe or tube is determined to be fit for use, the material may be accepted without further testing, providing the imperfection does not encroach on minimum wall thickness requirements.

5.4 When specified by the purchaser, a nondestructive electric test, in accordance with Practices E 213, E 426, or E 571, may be used for seamless pipe or tube, instead of the hydrostatic test.

5.5 *Tension Test* — Tension testing shall be conducted in accordance with Test Methods E 8.

5.5.1 The material shall conform to the tensile properties prescribed in the individual product specification.

5.6 *Hardness Test* — Hardness testing shall be conducted in accordance with Test Methods E 18.

5.7 *Grain Size* — The measurement of average grain size may be carried out by the planimetric method, the comparison method, or the intercept method described in Test Methods E 112. In case of dispute, the "referee" method for determining average grain size shall be the intercept method.

5.8 For purposes of determining compliance with the specified limits for requirements of the properties listed in the following table, an observed value or a calculated value shall be rounded in accordance with the rounding method of Practice of E 29:

Requirements	Rounded Unit for Observed or Calculated Value
Chemical composition and tolerances	Nearest unit in the last right-hand place of figures of the specified limit
Tensile strength, yield strength	Nearest 1000 psi (7 MPa)
Elongation	Nearest 1%
Grain size:	
0.0024 in. (0.060 mm) or larger	Nearest multiple of 0.0002 in. (0.005 mm)
Less than 0.0024 in. (0.060 mm)	Nearest multiple of 0.0001 in. (0.002 mm)

6. Dimensions and Permissible Variations

6.1 Dimensions of pipe are shown in Table 1.

6.1.1 Permissible variations in outside diameter and wall thickness are shown in Table 2, Table 3, and Table 4.

6.2 *Length* — When material is ordered as cut-to-length, the length shall conform to the permissible variations prescribed in Table 5. When material is ordered to random lengths, the lengths and variations shall be agreed upon between the manufacturer and purchaser.

TABLE 1
DIMENSIONS OF PIPE

NPS Designator	Outside Diameter		Nominal Wall Thickness							
			Schedule 5S[A]		Schedule 10S[A]		Schedule 40S		Schedule 80S	
	in.	mm	in.	mm	in.	mm	in.	mm	in.	mm
1/8	0.405	10.29	...	...	0.049	1.24	0.068	1.73	0.095	2.41
1/4	0.540	13.72	...	...	0.065	1.65	0.088	2.24	0.119	3.02
3/8	0.675	17.15	...	...	0.065	1.65	0.091	2.31	0.126	3.20
1/2	0.840	21.34	0.065	1.65	0.083	2.11	0.109	2.77	0.147	3.73
3/4	1.050	26.67	0.065	1.65	0.083	2.11	0.113	2.87	0.154	3.91
1.0	1.315	33.40	0.065	1.65	0.109	2.77	0.133	3.38	0.179	4.55
1 1/4	1.660	42.16	0.065	1.65	0.109	2.77	0.140	3.56	0.191	4.85
1 1/2	1.900	48.26	0.065	1.65	0.109	2.77	0.145	3.68	0.200	5.08
2	2.375	60.33	0.065	1.65	0.109	2.77	0.154	3.91	0.218	5.54
2 1/2	2.875	73.03	0.083	2.11	0.120	3.05	0.203	5.16	0.276	7.01
3	3.500	88.90	0.083	2.11	0.120	3.05	0.216	5.49	0.300	7.62
3 1/2	4.000	101.60	0.083	2.11	0.120	3.05	0.226	5.74	0.318	8.08
4	4.500	114.30	0.083	2.11	0.120	3.05	0.237	6.02	0.337	8.56
5	5.563	141.30	0.109	2.77	0.134	3.40	0.258	6.55	0.375	9.52
6	6.625	168.28	0.109	2.77	0.134	3.40	0.280	7.11	0.432	10.97
8	8.625	219.08	0.109	2.77	0.148	3.76	0.322	8.18	0.500	12.70
10	10.750	273.05	0.134	3.40	0.165	4.19	0.365	9.27	0.500[B]	12.70[B]
12	12.750	323.85	0.156	3.96	0.180	4.57	0.375[B]	9.52[B]	0.500[B]	12.70[B]
14	14.000	355.60	0.156	3.96	0.188[B]	4.78[B]	...	...	...	...
16	16.000	406.40	0.165	4.19	0.188[B]	4.78[B]	...	...	...	...
18	18.000	457.20	0.165	4.19	0.188[B]	4.78[B]	...	...	...	...
20	20.000	508.00	0.188	4.78	0.218[B]	5.54[B]	...	...	...	...
22	22.000	558.80	0.188	4.78	0.218[B]	5.54[B]	...	...	...	...
24	24.000	609.60	0.218	5.54	0.250	6.35	...	...	...	...
30	30.000	762.00	0.250	6.35	0.312	7.92	...	...	...	...

NOTE 1 — The following table is a reprint of Table 1 of ANSI B36.19.
NOTE 2 — The decimal thicknesses listed for the respective pipe sizes represent their nominal wall dimensions.

[A] Schedules 5S and 10S wall thicknesses do not permit threading in accordance with ANSI B1.20.1.
[B] These do not conform to ANSI B36.10.

6.3 *Straightness* — Material shall be reasonably straight and free of bends and kinks.

6.4 *Ends* — Ends shall be plain cut and deburred.

7. Workmanship, Finish, and Appearance

7.1 The material shall be uniform in quality and temper, smooth, and free from imperfections that would render it unfit for use.

8. Sampling

8.1 *Lot Definition:*

8.1.1 A lot for chemical analysis shall consist of one heat.

8.1.2 A lot for all other testing shall consist of all material from the same heat, nominal size (excepting length), and condition (temper). When final heat treatment is in a batch-type furnace, a lot shall include only those pipes or tubes of the same size and the same heat that are heat-treated in the same furnace charge. When heat treatment is in a continuous furnace, a lot shall include all pipes or tubes of the same size and heat, heat-treated in the same furnace at the same temperature, time at temperature, and furnace speed during one production run. At no time shall a lot consist of more than 20 000 lb (9100 kg).

8.1.2.1 Where material cannot be identified by heat, a lot shall consist of not more than 500 lb (227 kg) of material of the same alloy in the same condition (temper) and nominal size (excepting length).

NOTE 2 — For tension, hardness, grain size, and flare test requirements, the term lot applies to all lengths prior to cutting.

8.2 *Test Material Selection:*

8.2.1 *Chemical Analysis* — Representative samples from each lot shall be taken during pouring or subsequent processing.

TABLE 2
PERMISSIBLE VARIATIONS FOR OUTSIDE DIAMETER AND WALL THICKNESS OF SEAMLESS COLD-WORKED PIPE AND TUBE[A,B]

Nominal Outside Diameter, in. (mm)	Permissible Variations					
	Outside Diameter, in. (mm)		Thickness of Specified Nominal Wall, %		Thickness of Specified Minimum Wall, %	
	Plus	Minus	Plus	Minus	Plus	Minus
Over 0.400 (10) to 5/8 (16), excl	0.005 (0.13)	0.005 (0.13)	15.0	15.0	30	0
5/8 (16) to 1 1/2 (38), incl	0.0075 (0.19)	0.0075 (0.19)	10.0	10.0	22	0
Over 1 1/2 (38) to 3 (76), incl	0.010 (0.25)	0.010 (0.25)	10.0	10.0	22	0
Over 3 (76) to 4 1/2 (114), incl	0.015 (0.38)	0.015 (0.38)	10.0	10.0	22	0
Over 4 1/2 (114) to 6 (152), incl	0.020 (0.51)	0.020 (0.51)	12.5	12.5	28	0
Over 6 (152) to 6 5/8 (168), incl	0.025 (0.64)	0.025 (0.64)	12.5	12.5	28	0
Over 6 5/8 (168) to 8 5/8 (219), incl	0.031 (0.79)	0.031 (0.79)	12.5	12.5	28	0

[A] *Ovality* — The permissible variations in this table apply to individual measurements, including out-of-roundness (ovality) except for the following: For pipe and tube having a nominal wall thickness of 3% or less of the nominal outside diameter, the mean outside diameter shall conform to the permissible variations of this table and individual measurements (including ovality) shall conform to the plus and minus values of the table, with the values increased by 0.5% of the nominal outside diameter.

For pipe and tube over 4 1/2 in. (114 mm) in outside diameter with a nominal wall thickness greater than 3% of the nominal outside diameter, the mean outside diameter shall conform to the permissible variations of this table and individual measurements shall not exceed twice the permissible variations of the table.

[B] *Eccentricity* — The permissible variations in this table apply to individual measurements including eccentricity.

TABLE 3
PERMISSIBLE VARIATIONS FOR OUTSIDE DIAMETER AND WALL THICKNESS OF HOT-FINISHED TUBE[A]

Nominal Outside Diameter in. (mm)	Permissible Variations					
	Outside Diameter or Inside Diameter, in. (mm)		% of Thickness of Specified Nominal Wall		% of Thickness of Specific Minimum Wall	
	+	−	+	−	+	−
3/4 (19) to 1 1/2 (38), incl	0.015 (0.4)	0.031 (0.8)	12.5	12.5	28.5	0
Over 1 1/2 (38.1) to 4 (102), incl	0.031 (0.8)	0.031 (0.8)	12.5	12.5	28.5	0
Over 4 (102) to 9 1/4 (235), incl	0.062 (1.6)	0.031 (0.8)	12.5	12.5	28.5	0

[A] *Ovality* — Tube 5 in. (127 mm) and under in outside diameter the tolerance on the outside diameter applies for individual measurements and includes ovality. Tube over 5 in. (127 mm) in outside diameter the mean outside diameter shall conform to the permissible variations of this table and individual measurements shall not exceed twice the permissible variations of this table.

TABLE 4
PERMISSIBLE VARIATIONS FOR OUTSIDE DIAMETER AND WALL THICKNESS OF SEAMLESS HOT-WORKED PIPE[A,B]

Nominal Outside Diameter, in. (mm)	Permissible Variations					
	Outside Diameter, in. (mm)		Thickness of Specified Nominal Wall, %		Thickness of Specified Minimal Wall, %	
	Plus	Minus	Plus	Minus	Plus	Minus
2 1/2 (64) to 4 1/2 (114), incl	0.031 (0.79)	0.031 (0.79)	16.0	12.5	28.5	0
Over 4 1/2 (114) to 6 1/2 (165), incl	0.047 (1.2)	0.047 (1.2)	16.0	12.5	28.5	0
Over 6 1/2 (165) to 9 1/4 (235), incl	0.062 (1.6)	0.062 (1.6)	16.0	12.5	28.5	0

[A] *Ovality* — For pipe 5 in. (127 mm) and under in outside diameter, the tolerance on the outside diameter applies for individual measurements and includes ovality. For pipe over 5 in. (125 mm) in outside diameter, the mean outside diameter shall conform to the permissible variations of this table and individual measurements shall not exceed twice the permissible variations of this table.

[B] *Eccentricity* — The permissible variations in this table apply to individual measurements including eccentricity.

TABLE 5
PERMISSIBLE VARIATIONS IN LENGTH[A]

Outside Diameter, in. (mm)	Cut Length, in. (mm) Over	Under
Under 2 (50.8)	1/8 (3.2)	0
2 (50.8) and over	3/16 (4.8)	0

[A] These permissible variations in length apply to pipe or tube in straight lengths. They apply to cut lengths up to and including 24 ft (7.3 m). For lengths over 24 ft, an additional over-tolerance of 1/8 in. (3.2 mm) for each 10 ft (3 m) or fraction thereof shall be permissible up to a maximum additional over-tolerance of 1/2 in. (12.7 mm).

8.2.2 *Mechanical and Other Properties* — Samples of the material to provide test specimens for mechanical and other properties shall be taken from such locations in each lot as to be representative of that lot. Test specimens shall be taken from material in the final condition (temper).

9. Retests and Retreatment

9.1 *Retests* — If the results of the mechanical tests of any group or lot do not conform to the requirements specified in the individual specification, retests may be made on additional tubes of double the original number from the same group or lot, each of which shall conform to the requirements specified.

9.2 *Retreatment* — If the individual pipes/tubes or the material selected to represent any lot fail to conform to the test requirements, the individual pipes/tubes or the lot represented may be reheat treated and resubmitted for test. Not more than two reheat treatments shall be permitted.

10. Specimen Preparation

10.1 *Room Temperature Tensile Specimen:*

10.1.1 Material shall be tested in the direction of fabrication. Whenever possible, the pipe or tube shall be tested in full cross section. When testing in full section is not posssible, longitudinal strip specimens or the largest possible round section shall be used. In the event of disagreement when full section testing is not possible, a longitudinal strip specimen with reduced gage length as contained in Test Methods E 8 shall be used.

10.2 *Hardness Specimen:*

10.2.1 The hardness specimen shall be prepared in accordance with Test Methods E 18. The test shall be made on the inside diameter surface of a specimen cut from the end, or on the inside of the pipe near the end, at the option of the manufacturer.

10.3 *Grain Size:*

10.3.1 If required, the grain size specimen shall be a transverse sample representing full wall thickness.

11. Inspection

11.1 Witnessing of testing or inspection by the purchaser's representative shall be agreed upon by the purchaser and the manufacturer as part of the purchase contract.

12. Rejection and Rehearing

12.1 Material tested by the purchaser that fails to conform to the requirements of this specification may be rejected. Rejection should be reported to the supplier promptly and in writing. In case of dissatisfaction with the results of the test, the producer or supplier may make claim for a rehearing.

13. Certification

13.1 A manufacturer's certification shall be furnished to the purchaser stating that the material has been manufactured, tested and inspected in accordance with this specification, and that the test results on representative samples meet specification requirements. A report of the test results shall be furnished.

14. Product Marking

14.1 *Material Marking:*

14.1.1 The name or brand of the manufacturer, the name of the material or UNS number, the letters ASTM, the product specification number, heat number, class (if applicable) and nominal size shall be legibly marked on each piece 3/4 in. (19.0 mm) outside diameter and larger and lengths greater than 3 ft (914 mm). The material marking shall be by any method that will not result in harmful contamination.

14.1.2 For material smaller than 3/4 in. (19.0 mm) outside diameter, or lengths under 3 ft (914 mm), the information specified in 14.1.1 shall be legibly marked on each piece or marked, at the option of the manufacturer, on a tag securely attached to the bundle or box in which the material is shipped.

15. Packaging and Package Marking

15.1 The following information shall be marked on the material or included on the package, or on a label or

tag attached thereto: name of the material or UNS number, heat number, condition (temper), the letters ASTM, the product specification number, the nominal size, gross, tare, and net weight, consignor and consignee addresses, contract or order number, and such other information as may be defined by the purchase contract.

16. Keywords

16.1 cold worked; hot finished; nickel; nickel alloys; seamless pipe; seamless tube

SPECIFICATION FOR TEST METHOD FOR DETERMINATION OF SUSCEPTIBILITY TO STRESS CORROSION CRACKING IN COPPER ALLOYS USING AN AMMONIA VAPOR TEST

SB-858M

(Identical with ASTM Specification B 858M-95.)

1. Scope

1.1 This test method describes a procedure that may be used to determine the presence of residual stresses which may lead to stress corrosion cracking of wrought copper alloy products. This test method uses an ammonia atmosphere to simulate service conditions under which stress corrosion cracking may occur.

1.2 This test method is only suitable for products fabricated from copper alloys that are known to be susceptible to stress corrosion cracking in ammonia vapor atmospheres. It is intended to create an environmental condition of reproducible severity, but it is well known that the critical step in the cracking mechanism is the development of an environment in the condensate film that occurs on the surface of the test specimen, which is rich in copper complex ions.

1.3 This test method is a conversion of ISO 6957, "Copper Alloys — Ammonia Test for Stress Corrosion Resistance."

1.4 The severity of this test method depends upon the pH of the corrosive solution. In Annex A1 are given four different atmospheres to which the product may be exposed, and the appropriate pH of the solution to be used for the test, depending on the risk level associated with the intended application.

1.4.1 The appropriate pH value for the test shall be specified in the product specification, or as per established agreement between the supplier and purchaser, with respect to the alloy and its intended application.

1.5 The values stated in SI units are the standard.

1.6 *This standard does not purport to address all of the safety concerns, if any, associated with its use. It is the responsibility of the user of this standard to establish appropriate safety and health practices and determine the applicability of regulatory limitations prior to use.*

2. Referenced Documents

2.1 *ASTM Standards*

B 154 Test Method for Mercurous Nitrate Test for Copper and Copper Alloys

D 1193 Specification for Reagent Water

2.2 *Other Documents*

ISO 6957 Copper Alloys — Ammonia Test for Stress Corrosion Resistance

3. Terminology

3.1 *Definitions*

3.1.1 *applied stress* — stress in a body due to application of an external load

3.1.2 *residual stress* — stresses that remain within a body as the result of processing, which may include plastic deformation or casting

3.1.3 *stress corrosion crack* — spontaneous failure of metals by cracking under combined action of corrosion and stress, residual or applied

4. Summary of Test Method

4.1 The prepared test specimen is placed in a closed container and exposed to ammonia vapor at ambient temperature for 24 h. Upon removal from the test atmosphere, the test specimen is examined for the presence of cracks.

5. Significance and Use

5.1 This test method is an accelerated test to determine if a copper alloy product in a specific stress condition will be susceptible to stress corrosion cracking when exposed to a particular atmospheric condition during service with the appropriate risk level — see Annex A1. This test method is generally intended to determine if a copper alloy product will crack because of internal stresses when subjected to the test, and is not intended for testing assemblies under applied stress. If used for this purpose it shall be for information only and not a cause for rejection of the assembly, its component parts, or the original mill product.

6. Reagents and Materials

6.1 *Purity of Reagents* — Reagent grade chemicals shall be used in all tests. Unless otherwise indicated, it is intended that all reagents conform to the specifications of the Committee on Analytical Reagents of the American Chemical Society where such specifications are available. Other grades may be used, provided it is first ascertained that the reagent is of sufficiently high purity to permit its use without lessening the accuracy of the determination.

6.2 *Purity of Water* — Unless otherwise indicated, references to water shall be understood to mean reagent water as defined by Type IV or better, of Specification D 1193.

6.3 *Ammonium Chloride Solution (4N)* — Dissolve 107 g of ammonium chloride (NH_4Cl) in water and dilute to 500 mL. Store the solution in a closed vessel.

6.4 *Hydrogen Peroxide (H_2O_2),* 30–35% technical grade. **CAUTION** — Hydrogen peroxide in high concentrations can cause severe skin burns.

6.5 *Sodium Hydroxide Solution (300–500 g/L)* — Dissolve 300–500 g of sodium hydroxide (NaOH) into water and dilute to 1 L. **Warning** — Sodium hydroxide can cause chemical burns to the skin and eyes. Use of proper safety equipment is advised.

6.6 A clean organic solvent or hot alkaline solution.

6.7 *Sulfuric Acid Solution (50 mL/L)* — Slowly add 50 mL of concentrated sulfuric acid (H_2SO_4) into water and dilute to 1 L.

7. Apparatus

7.1 *pH-meter;*

7.2 *closed vessel,* such as a desiccator; and

7.3 equipment for examining test pieces at 10× to 15× magnification.

8. Test Media

8.1 Slowly add sodium hydroxide solution to ammonium chloride solution to give a test solution with a pH-value appropriate to the intended application (see Annex A1). Maintain the solution at ambient temperature and dilute with DI water up to a volume of 1 L. Check the pH-value with the pH meter after dilution. Prepare the solution preferably in a fume hood in a laboratory using appropriate safe laboratory procedures and store it in a closed vessel. Before use, check the pH-value again, and adjust if necessary.

8.1.1 In the closed test vessel, the ratio of surface area of test solution to air volume of the vessel above the solution shall be a minimum of 20 cm^2/L.

8.2 The pickling solution for cleaning test pieces before and after testing shall be 5% sulfuric acid. If necessary, for cleaning test pieces after testing, a small amount of hydrogen peroxide solution may be added to the pickling solution (for example, 20 to 30 mL of hydrogen peroxide solution per liter of pickling solution).

9. Test Specimen Preparation

9.1 The test specimen shall be prescribed in the material specification for the product or part being tested. In the event that a test specimen size is not prescribed in a given rod, wire, or tube specification, a full cross section having a minimum length of 152 mm shall be tested.

9.2 The presence of burrs on the test specimen may contribute to acceleration of stress corrosion cracking if not removed prior to the ammonia vapor test. The burrs shall be removed by fine file or abrasive paper to facilitate this test.

9.3 Degrease the test specimen using the clean organic solvent or alkaline solution.

9.4 After degreasing, clean the test piece in the pickling solution and immediately thereafter thoroughly rinse it, first in cold running water, then in hot water, and finally, completely dry it in a stream of warm air.

10. Test Procedure

10.1 Allow the dry test piece to reach the exposure temperature specified below, and transfer it immediately to the closed vessel (see 7.2) at the same temperature, and containing the freshly prepared test solution at the specified pH-value (see 8.1).

10.1.1 Suspend (or place) the test piece in such a way that the ammonia vapor has free access to all surfaces, not less than 50 mm above the test solution surface.

10.1.1.1 When placed on a porcelain support within the test vessel, the region of the test piece within 5 mm of the support shall be disregarded when inspecting for cracks.

10.1.1.2 The test piece shall be placed no less than 10 mm from the inside walls of the test vessel.

10.1.1.3 When more than one test piece is placed in the vessel, the test pieces shall be no less than 10 mm apart.

10.2 The volume of the test solution shall be at least 200 mL per square decimeter of test piece surface. The exposure temperature shall be between 20°C and 30°C and shall be kept constant to within ±1°C during the test. In case of dispute, the temperature shall be kept at 25°C ± 1°C.

10.3 The exposure time shall be 24 h.

10.4 After exposure, remove the test piece from the closed vessel and immediately clean it in pickling solution for a few minutes at ambient tmperature (below 40°C), or until the surfaces of the test piece are sufficiently clean from corrosion products to allow observation of possible cracks. After rinsing in water and drying in warm air, examine the surface of the test piece for cracks at a magnification of 10× to 15×.

10.5 Before inspection, deform the test piece slightly by bending or flattening to open up fine cracks to make them more easily observable.

10.6 Metallographic examination may be used to determine the metallurgical nature of any observed cracks.

11. Test Report

11.1 The test report shall contain the following information:

11.1.1 sample identification;

11.1.2 reference to the test method used;

11.1.3 the pH-value used for the solution producing the ammoniacal atmosphere;

11.1.4 the number of replicate test pieces tested;

11.1.5 the test results: cracks or no cracks (as required in the appropriate product specification);

11.1.6 any other features of the material noted during the determination; and

11.1.7 the date of the test.

12. Precision and Bias

12.1 No statement is made about the precision or bias of this test method since the procedure is directed at a subjective visual interpretation of condition of the specimen and its relation to an applicable product specification.

13. Keywords

13.1 ammonia test; residual stress; stress corrosion

ANNEX

(Mandatory Information)

A1. REPRESENTATIVE pH-VALUES

A1.1 On the basis of the known correlation between the behavior of test pieces in the ammonia vapor test and the behavior of copper alloy products under service conditions, the following pH-values are considered as being representative of atmospheres of different corrosiveness and corresponding to different safety requirements.

A1.1.1 An appropriate risk level (pH-value) shall be specified in the product specification.

Corrosiveness of Atmosphere	pH-Value Safety Requirement	
	Low	High
Low	8.3	9.5
Indoor atmosphere conditions		
Moderate	9.5	10.0
Indoor atmosphere with risk of formation of condensation		
Outdoor atmosphere, temperate climate	9.8	10.0
High		
Atmosphere with ammoniacal pollution, for example in stables	10.0	10.5

APPENDIX

(Nonmandatory Information)

X1. RATIONALE (COMMENTARY)

X1.1 This standard was developed to address the demand for a test method for determination of the presence of residual stresses in copper alloy products which may lead to stress corrosion cracking other than the mercurous nitrate test, Test Method B 154. This test method is a conversion of ISO 6957 "Copper Alloys — Ammonia Test for Stress Corrosion Resistance." Research work performed by Mattsson, et al., validates the technical integrity of the test method.

X1.2 This test method does not attempt to compare the effectiveness of the test to other test methods, including the mercurous nitrate test, Test Method B 154, nor does it attempt to quantify its relative effectiveness on various copper alloy products. These issues must be addressed on a case by case basis, since such products and tests are specific for their respective requirements and applications.

SPECIFICATION FOR TITANIUM AND TITANIUM ALLOY SEAMLESS PIPE

SB-861

(Identical with ASTM Specification B 861-01 for all grades, except for section 21.1, which requires mandatory certification.)

1. Scope

1.1 This specification covers the requirements for 26 grades of titanium and titanium alloy seamless pipe intended for general corrosion resisting and elevated temperature service as follows:

1.1.1 *Grade 1* — Unalloyed titanium, low oxygen,

1.1.2 *Grade 2* — Unalloyed titanium, standard oxygen,

1.1.3 *Grade 3* — Unalloyed titanium, medium oxygen,

1.1.4 *Grade 5* — Titanium alloy (6% aluminum, 4% vanadium),

1.1.5 *Grade 7* — Unalloyed titanium plus 0.1% to 0.25% palladium, standard oxygen,

1.1.6 *Grade 9* — Titanium alloy (3% aluminum, 2.5% vanadium),

1.1.7 *Grade 11* — Unalloyed titanium plus 0.12% to 0.25% palladium, low oxygen,

1.1.8 *Grade 12* — Titanium alloy (0.3% molybdenum, 0.8% nickel),

1.1.9 *Grade 13* — Titanium alloy (0.5% nickel, 0.05% ruthenium), low oxygen,

1.1.10 *Grade 14* — Titanium alloy (0.5% nickel, 0.05% ruthenium), standard oxygen,

1.1.11 *Grade 15* — Titanium alloy (0.5% nickel, 0.05% ruthenium), medium oxygen,

1.1.12 *Grade 16* — Unalloyed titanium plus 0.04% to 0.08% palladium, standard oxygen,

1.1.13 *Grade 17* — Unalloyed titanium plus 0.04% to 0.08% palladium, low oxygen,

1.1.14 *Grade 18* — Titanium alloy (3% aluminum, 2.5% vanadium plus 0.04% to 0.08% palladium),

1.1.15 *Grade 19* — Titanium alloy (3% aluminum, 8% vanadium, 6% chromium, 4% zirconium, 4% molybdenum),

1.1.16 *Grade 20* — Titanium alloy (3% aluminum, 8% vanadium, 6% chromium, 4% zirconium, 4% molybdenum) plus 0.04% to 0.08% palladium,

1.1.17 *Grade 21* — Titanium alloy (15% molybdenum, 3% aluminum, 2.7% niobium, 0.25% silicon),

1.1.18 *Grade 23* — Titanium alloy (6% aluminum, 4% vanadium, extra low interstitial, ELI),

1.1.19 *Grade 24* — Titanium alloy (6% aluminum, 4% vanadium) plus 0.04% to 0.08% palladium,

1.1.20 *Grade 25* — Titanium alloy (6% aluminum, 4% vanadium) plus 0.3% to 0.8% nickel and 0.04% to 0.08% palladium,

1.1.21 *Grade 26* — Unalloyed titanium plus 0.08 to 0.14% ruthenium,

1.1.22 *Grade 27* — Unalloyed titanium plus 0.08 to 0.14% ruthenium,

1.1.23 *Grade 28* — Titanium alloy (3% aluminum, 2.5% vanadium plus 0.08–0.14% ruthenium),

1.1.24 *Grade 29* — Titanium alloy (6% aluminum, 4% vanadium, extra low interstitial, ELI plus 0.08–0.14% ruthenium),

1.1.25 *Grade 33* — Titanium alloy (0.4% nickel, 0.015% palladium, 0.025% ruthenium, 0.15% chromium), and

1.1.26 *Grade 34* — Titanium alloy (0.4% nickel, 0.015% palladium, 0.025% ruthenium, 0.15% chromium).

1.2 The values stated in inch-pound units are to be regarded as standard. The values given in parentheses are for information only.

2. Referenced Documents

2.1 *ASTM Standards:*

A 370 Test Methods and Definitions for Mechanical Testing of Steel Products

E 29 Practice for Using Significant Digits in Test Data to Determine Conformance with Specifications

E 120 Test Methods for Chemical Analysis of Titanium and Titanium Alloys

E 1409 Test Method for Determination of Oxygen in Titanium and Titanium Alloys by the Inert Gas Fusion Technique

E 1447 Test Method for Determination of Hydrogen in Titanium and Titanium Alloys by the Inert Gas Fusion Thermal Conductivity Method

2.2 *ANSI/ASME Standard:*

B 36.19M-1985 Stainless Steel Pipe

3. Terminology

3.1 *Definitions:*

3.1.1 *lot, n* — a number of pieces of pipe of the same nominal size and wall thickness manufactured by the same process from a single heat of titanium or titanium alloy and heat treated by the same furnace parameters in the same furnace.

3.1.2 *seamless pipe, n* — a hollow tubular product produced with a continuous periphery in all stages of manufacture.

4. Ordering Information

4.1 Orders for materials under this specification shall include the following information as required:

4.1.1 Quantity,

4.1.2 Grade number (Section 1 and Table 1),

4.1.3 Nominal pipe size and schedule (Table 2),

4.1.4 Diameter tolerance (Table 3),

4.1.5 Length tolerance (see 9.3),

4.1.6 Method of manufacture and finish (Sections 5 and 10),

4.1.7 Product analysis, if required (Sections 6 and 7; Table 1 and Table 4),

4.1.8 Mechanical properties, (Sections 8, 14, 15, and 16 and Table 5),

4.1.9 Packaging (Section 23),

4.1.10 Inspection and test reports (Sections 19, 20, and 21), and

4.1.11 Product marking (Section 22).

5. Manufacture

5.1 Seamless pipe may be manufactured by any method that will yield a product meeting the requirements of this specification.

5.2 Unless specified, cold worked pipe shall be heat treated at a temperature of not less than 1000°F (538°C). Hot worked pipe finishing above 1400°F (760°C) need not be further heat treated. The minimum heat treat conditions for Grades 9, 18, and 28 pipe delivered in the stress relieved condition shall be 600°F (316°C) for at least 30 min.

5.2.1 Grade 5, Grade 9, Grade 18, Grade 19, Grade 20, Grade 21, Grade 23, Grade 24, Grade 25, Grade 28, and Grade 29 alloys may be supplied in the following conditions:

5.2.1.1 *Grade 5, Grade 23, Grade 24, Grade 25, or Grade 29*— annealed or aged condition,

5.2.1.2 *Grade 9, Grade 18, or Grade 28*— cold-worked and stress-relieved or annealed,

5.2.1.3 *Grade 9, Grade 18, Grade 23, Grade 28, or Grade 29*— transformed-beta condition, and

5.2.1.4 *Grade 19, Grade 20, or Grade 21*— solution-treated or solution-treated and aged.

6. Chemical Requirements

6.1 The grades of titanium and titanium alloy metal covered by this specification shall conform to the requirements of the chemical compositions prescribed in Table 1.

6.1.1 The elements listed in Table 1 are intentional alloy additions or elements which are inherent to the manufacture of titanium sponge, ingot or mill product.

6.1.1.1 Elements other than those listed in Table 1 are deemed to be capable of occurring in the grades listed in Table 1 by and only by way of unregulated or unanalyzed scrap additions to the ingot melt. Therefore, product analysis for elements not listed in Table 1 shall not be required unless specified and shall be considered to be in excess of the intent of this specification.

6.1.2 Elements intentionally added to the melt must be identified, analyzed, and reported in the chemical analysis.

6.2 When agreed upon by the producer and purchaser and requested by the purchaser in his written purchase order, chemical analysis shall be completed for specific residual elements not listed in this specification.

6.3 At least two samples for chemical analysis shall be tested to determine chemical composition. Samples

TABLE 1
CHEMICAL REQUIREMENTS[A]

Element	Composition, %							
	Grade 1	Grade 2	Grade 3	Grade 5	Grade 7	Grade 9	Grade 11	Grade 12
Nitrogen, max	0.03	0.03	0.05	0.05	0.03	0.03	0.03	0.03
Carbon, max	0.08	0.08	0.08	0.08	0.08	0.08	0.08	0.08
Hydrogen,[B,C] max	0.015	0.015	0.015	0.015	0.015	0.015	0.015	0.015
Iron, max	0.20	0.30	0.30	0.40	0.30	0.25	0.20	0.30
Oxygen, max	0.18	0.25	0.35	0.20	0.25	0.15	0.18	0.25
Aluminum	...	...	...	5.5–6.75	...	2.5–3.5	...	...
Vanadium	...	...	...	3.5–4.5	...	2.0–3.0	...	...
Tin	...	...	...	...	...	...	...	...
Ruthenium	...	...	...	...	...	...	...	...
Palladium	...	...	...	...	0.12–0.25	...	0.12–0.25	...
Molybdenum	...	...	...	...	...	...	...	0.2–0.4
Chromium	...	...	...	...	...	...	...	...
Nickel	...	...	...	...	...	...	...	0.6–0.9
Niobium	...	...	...	...	...	...	...	...
Zirconium	...	...	...	...	...	...	...	...
Silicon	...	...	...	...	...	...	...	...
Residuals,[D,E,F] max each	0.1	0.1	0.1	0.1	0.1	0.1	0.1	0.1
Residuals,[D,E,F] max total	0.4	0.4	0.4	0.4	0.4	0.4	0.4	0.4
Titanium[G]	balance	balance	balance	balance	balance	balance	balance	balance

Element	Composition,%					
	Grade 13	Grade 14	Grade 15	Grade 16	Grade 17	Grade 18
Nitrogen, max	0.03	0.03	0.05	0.03	0.03	0.03
Carbon, max	0.08	0.08	0.08	0.08	0.08	0.08
Hydrogen,[B,C] max	0.015	0.015	0.015	0.015	0.015	0.015
Iron, max	0.20	0.30	0.30	0.30	0.20	0.25
Oxygen, max	0.10	0.15	0.25	0.25	0.18	0.15
Aluminum	...	...	...	...	...	2.5–3.5
Vanadium	...	...	...	...	...	2.0–3.0
Tin	...	...	...	...	...	...
Ruthenium	0.04–0.06	0.04–0.06	0.04–0.06	...	...	...
Palladium	...	...	...	0.04–0.08	0.04–0.08	0.04–0.08
Molybdenum	...	...	...	...	...	...
Chromium	...	...	...	...	...	...
Nickel	0.4–0.6	0.4–0.6	0.4–0.6	...	...	...
Niobium	...	...	...	...	...	...
Zirconium	...	...	...	...	...	...
Silicon	...	...	...	...	...	...
Residuals,[D,E,F] max each	0.1	0.1	0.1	0.1	0.1	0.1
Residuals,[D,E,F] max total	0.4	0.4	0.4	0.4	0.4	0.4
Titanium[G]	balance	balance	balance	balance	balance	balance

(continued)

TABLE 1
CHEMICAL REQUIREMENTS[A] (CONT'D)

Element	Composition, %					
	Grade 19	Grade 20	Grade 21	Grade 23	Grade 24	Grade 25
Nitrogen, max	0.03	0.03	0.03	0.03	0.05	0.05
Carbon, max	0.05	0.05	0.05	0.08	0.08	0.08
Hydrogen,[B,C] max	0.02	0.02	0.015	0.0125	0.015	0.0125
Iron, max	0.30	0.30	0.40	0.25	0.40	0.40
Oxygen, max	0.12	0.12	0.17	0.13	0.20	0.20
Aluminum	3.0–4.0	3.0–4.0	2.5–3.5	5.5–6.5	5.5–6.75	5.5–6.75
Vanadium	7.5–8.5	7.5–8.5	...	3.5–4.5	3.5–4.5	3.5–4.5
Tin	...	...	...	...	...	...
Ruthenium	...	...	...	...	...	...
Palladium	...	0.04–0.08	...	...	0.04–0.08	0.04–0.08
Molybdenum	3.5–4.5	3.5–4.5	14.0–16.0	...	...	...
Chromium	5.5–6.5	5.5–6.5	...	...	...	...
Nickel	...	...	...	...	...	0.3–0.8
Niobium	...	...	2.2–3.2	...	...	...
Zirconium	3.5–4.5	3.5–4.5	...	...	...	...
Silicon	...	...	0.15–0.25	...	...	...
Residuals,[D,E,F] max each	0.15	0.15	0.1	0.1	0.1	0.1
Residuals,[D,E,F] max total	0.4	0.4	0.4	0.4	0.4	0.4
Titanium[G]	balance	balance	balance	balance	balance	balance

Element	Composition, %					
	Grade 26	Grade 27	Grade 28	Grade 29	Grade 33	Grade 34
Nitrogen, max	0.03	0.03	0.03	0.03	0.03	0.05
Carbon, max	0.08	0.08	0.08	0.08	0.08	0.08
Hydrogen,[B,C] max	0.015	0.015	0.015	0.015	0.015	0.015
Iron, max	0.30	0.20	0.25	0.25	0.30	0.30
Oxygen, max	0.25	0.18	0.15	0.13	0.25	0.35
Aluminum	...	...	2.5–3.5	5.5–6.5	...	...
Vanadium	...	...	2.0–3.0	3.5	...	...
Tin	...	...	...	...	...	...
Ruthenium	0.08–0.14	0.08–0.14	0.08–0.14	0.08–0.14	0.02–0.04	0.02–0.04
Palladium	...	...	...	...	0.01–0.02	0.01–0.02
Molybdenum	...	...	...	...	...	...
Chromium	...	...	...	...	0.1–0.2	0.1–0.2
Nickel	...	...	...	...	0.35–0.55	0.35–0.55
Niobium	...	...	...	...	...	...
Zirconium	...	...	...	...	...	...
Silicon	...	...	...	...	...	...
Residuals,[D,E,F] max each	0.1	0.1	0.1	0.1	0.1	0.1
Residuals,[D,E,F] max total	0.4	0.4	0.4	0.4	0.4	0.4
Titanium[G]	balance	balance	balance	balance	Remainder	Remainder

[A] Analysis shall be completed for all elements listed in this table for each grade. The analysis results for the elements not quantified in the table need not be reported unless the concentration level is greater than 0.1% each or 0.4% total.

[B] Lower hydrogen may be obtained by negotiation with the supplier.

[C] Final product analysis.

[D] Need not be reported.

[E] A residual is an element present in a metal or an alloy in small quantities and is inherent to the manufacturing process but not added intentionally. In titanium these elements include aluminum, vanadium, tin, chromium, molybdenum, niobium, zirconium, hafnium, bismuth, ruthenium, palladium, yttrium, copper, silicon, cobalt, tantalum, nickel, boron, manganese, and tungsten.

[F] The purchaser may, in his written purchase order, request analysis for specific residual elements not listed in this specification.

[G] The percentage of titanium is determined by difference.

TABLE 2 DIMENSIONS OF PIPE

NPS Desig.	Outside Dia.		Nominal Wall Thickness															
			Schedule 5S[A]		Schedule 5[A]		Schedule 10S[A]		Schedule 10[A]		Schedule 40S		Schedule 40		Schedule 80S		Schedule 80	
	in	mm	in	mm	in	mm	in	mm	in	mm	in	mm	in	mm	in	mm	in	mm
1/8	0.405	10.29	x	x	x	x	0.049	1.24	0.049	1.24	0.068	1.73	0.068	1.73	0.095	2.41	0.095	2.41
1/4	0.540	13.72	x	x	x	x	0.065	1.65	0.065	1.65	0.088	2.24	0.088	2.24	0.119	3.02	0.119	3.02
3/8	0.675	17.15	x	x	x	x	0.065	1.65	0.065	1.65	0.091	2.31	0.091	2.31	0.126	3.20	0.126	3.20
1/2	0.840	21.34	0.065	1.65	0.065	1.65	0.083	2.11	0.083	2.11	0.109	2.77	0.109	2.77	0.147	3.73	0.147	3.73
3/4	1.050	26.67	0.065	1.65	0.065	1.65	0.083	2.11	0.083	2.11	0.113	2.87	0.113	2.87	0.154	3.91	0.154	3.91
1	1.315	33.40	0.065	1.65	0.065	1.65	0.109	2.77	0.109	2.77	0.133	3.38	0.133	3.38	0.179	4.55	0.179	4.55
1-1/4	1.660	42.16	0.065	1.65	0.065	1.65	0.109	2.77	0.109	2.77	0.140	3.56	0.140	3.56	0.191	4.85	0.191	4.85
1-1/2	1.900	48.26	0.065	1.65	0.065	1.65	0.109	2.77	0.109	2.77	0.145	3.68	0.145	3.68	0.200	5.08	0.200	5.08
2	2.375	60.32	0.065	1.65	0.065	1.65	0.109	2.77	0.109	2.77	0.154	3.91	0.154	3.91	0.218	5.54	0.218	5.54
2-1/2	2.875	73.02	0.083	2.11	0.083	2.11	0.120	3.05	0.120	3.05	0.203	5.16	0.203	5.16	0.276	7.01	0.276	7.01
3	3.500	88.90	0.083	2.11	0.083	2.11	0.120	3.05	0.120	3.05	0.216	5.49	0.216	5.49	0.300	7.62	0.300	7.62
3-1/2	4.000	101.60	0.083	2.11	0.083	2.11	0.120	3.05	0.120	3.05	0.226	5.74	0.226	5.74	0.318	8.08	0.318	8.08
4	4.500	114.30	0.083	2.11	0.083	2.11	0.120	3.05	0.120	3.05	0.237	6.02	0.237	6.02	0.337	8.56	0.337	8.56
5	5.563	141.30	0.109	2.77	0.109	2.77	0.134	3.40	0.134	3.40	0.258	6.55	0.258	6.55	0.375	9.53	0.375	9.53
6	6.625	168.27	0.109	2.77	0.109	2.77	0.134	3.40	0.134	3.40	0.280	7.11	0.280	7.11	0.432	10.97	0.432	10.97
8	8.625	219.07	0.109	2.77	0.109	2.77	0.148	3.76	0.148	3.76	0.322	8.18	0.322	8.18	0.500	12.70	0.500	12.70
10	10.75	273.05	0.134	3.40	0.134	3.40	0.165	4.19	0.165	4.19	0.365	9.27	0.365	9.27	0.500	12.70	0.594	15.09
12	12.75	323.85	0.156	3.96	0.156	3.96	0.180	4.57	0.180	4.57	0.375	9.53	0.406	10.31	0.500	12.70	0.688	17.48
14	14.00	355.60	0.156	3.96	0.156	3.96	0.188	4.78	0.250	6.35	x	x	0.438	11.13	x	x	0.750	19.05
16	16.00	406.40	0.165	4.19	0.165	4.19	0.188	4.78	0.250	6.35	x	x	0.500	12.70	x	x	0.844	21.44
18	18.00	457.20	0.165	4.19	0.165	4.19	0.188	4.78	0.250	6.35	x	x	0.562	14.27	x	x	0.938	23.83
20	20.00	508.00	0.188	4.78	0.188	4.78	0.218	5.54	0.250	6.35	x	x	0.594	15.09	x	x	1.031	26.19
22	22.00	558.80	0.188	4.78	0.188	4.78	0.218	5.54	0.250	6.35	x	x	x	x	x	x	1.125	28.58
24	24.00	609.60	0.218	5.54	0.218	5.54	0.250	6.35	0.250	6.35	x	x	0.688	17.48	x	x	1.219	30.96
26	26.00	660.40	x	x	x	x	x	x	0.312	7.92	x	x	x	x	x	x	x	x
28	28.00	711.20	x	x	x	x	x	x	0.312	7.92	x	x	x	x	x	x	x	x
30	30.00	762.00	0.250	6.35	0.250	6.35	0.312	7.92	0.312	7.92	x	x	x	x	x	x	x	x
32	32.00	812.80	x	x	x	x	x	x	0.312	7.92	x	x	0.688	17.48	x	x	x	x
34	34.00	863.60	x	x	x	x	x	x	0.312	7.92	x	x	0.688	17.48	x	x	x	x
36	36.00	914.40	x	x	x	x	x	x	0.312	7.92	x	x	0.750	19.05	x	x	x	x

NOTE 1 — Schedule sizes conform to ANSI/ASME B36.19 (for "S" sizes) or B36.10 (for non-S sizes).
NOTE 2 — The decimal thickness listed for the respective pipe sizes represent their nominal wall dimensions.

[A] Threading not permitted in accordance with ANSI B.1.20.1

TABLE 3
PERMISSIBLE VARIATIONS IN DIAMETER

Nominal Outside Diameter (NPS)[A]	Permissible Variations in Outside Diameter	
	Over	Under
1/8 in. to 1 1/2 in. (3.2 mm to 38 mm)	1/64 in. (0.397 mm)	1/32 in. (0.794 mm)
over 1 1/2 in. to 4 in. (38 mm to 102 mm)	1/32 in. (0.794 mm)	1/32 in. (0.794 mm)
over 4 in. to 8 in. (102 mm to 203 mm)	1/16 in. (1.588 mm)	1/32 in. (0.794 mm)
over 8 in. to 18 in. (203 mm to 432 mm)	3/32 in. (2.382 mm)	1/32 in. (0.794 mm)

[A] NPS = nominal pipe size.

TABLE 4
PERMISSIBLE VARIATIONS IN PRODUCT ANALYSIS

Element	Product Analysis Limits, max or Range, %	Permissible Variation in Product Analysis
Nitrogen	0.05	+0.02
Carbon	0.10	+0.02
Hydrogen	0.02	+0.002
Iron	0.50	+0.15
Oxygen	0.30	+0.03
Oxygen	0.31 to 0.40	±0.04
Aluminum	2.5 to 6.75	±0.40
Vanadium	2.0 to 4.5	±0.15
Vanadium	7.5 to 8.5	±0.40
Palladium	0.01 to 0.02	±0.002
Palladium	0.04 to 0.08	±0.005
Palladium	0.12 to 0.25	±0.02
Silicon	0.15 to 0.25	±0.02
Ruthenium	0.02 to 0.04	±0.005
Ruthenium	0.04 to 0.06	±0.005
Ruthenium	0.08 to 0.14	±0.01
Zirconium	3.5 to 4.5	±0.20
Chromium	0.1 to 0.2	±0.02
Chromium	5.5 to 6.5	±0.30
Niobium	2.2 to 3.2	±0.15
Molybdenum	0.2 to 0.4	±0.03
Molybdenum	3.5 to 4.5	±0.20
Molybdenum	14.0 to 16.0	±0.50
Nickel	0.3 to 0.9	±0.05
Residuals[A] (each)	0.15	+0.02

[A] A residual is an element in a metal or alloy in small quantities inherent to the manufacturing process but not added intentionally.

shall be taken from the ingot or the opposite extremes of the product to be analyzed.

7. Product Analysis

7.1 When requested by the purchaser and stated in the purchase order, an analysis of chemical composition shall be made on the finished product.

7.2 The product analysis tolerances, listed in Table 4 do not broaden the specified analysis requirements, but cover variations between different laboratories in the measurement of chemical content. The manufacturer shall not ship finished product outside of the limits specified in Table 1 for the applicable grade.

8. Tensile Requirements

8.1 The tensile properties of the pipe, in the condition specified, shall conform to the room temperature requirements of Table 5. Mechanical properties for other conditions may be established by written agreement between the manufacturer and the purchaser.

9. Permissible Variations in Dimensions

9.1 A system of standard pipe sizes approved by ANSI as American National Standard for Stainless Steel Pipe (ANSI/ASME B36.19M-1985) reproduced as Table 2 shall apply.

9.2 *Diameter* — Variations in outside diameter shall not exceed those prescribed in Table 3.

9.3 *Thickness* — The variation in thickness at any point shall not be more than ±12.5% of the nominal wall thickness specified.

9.4 *Length* — Pipe shall be furnished in lengths as specified in the purchase order. No pipe shall be under the specified length and not more than 1/4 in. (6.4 mm) over that specified.

9.5 *Straightness* — The pipe shall be free of kinks and bends and the maximum bow of lengths up to 10 ft (3 m) shall not exceed 1:500. For lengths greater than 10 ft, the maximum bow shall not exceed 1:400.

10. Finish

10.1 The finished pipe shall have smooth ends, be free of burrs, and shall be free of injurious external and internal imperfections of a nature that will interfere with the purpose for which it is intended. Minor defects may

TABLE 5 TENSILE REQUIREMENTS[A]

Grade	Tensile Strength, min ksi	Tensile Strength, min (MPa)	Yield Strength (0.2% Offset) min. ksi	Yield Strength (0.2% Offset) min. (MPa)	Yield Strength (0.2% Offset) max. ksi	Yield Strength (0.2% Offset) max. (MPa)	Elongation 2 in. or 50 mm gage length, min %
1	35	(240)	25	(170)	45	(310)	24
2	50	(345)	40	(275)	65	(450)	20
3	65	(450)	55	(380)	80	(550)	18
5	130	(895)	120	(828)	...	...	10
5[B]	160	(1103)	150	(1034)	...	...	6
7	50	(345)	40	(275)	65	(450)	20
9	90	(620)	70	(483)	...	...	15
9[C]	90	(620)	70	(483)	...	...	12
9[D]	125	(860)	105	(725)	...	...	10
11	35	(240)	25	(170)	45	(310)	24
12	70	(483)	50	(345)	...	...	18
13	40	(275)	25	(170)	...	...	24
14	60	(410)	40	(275)	...	...	20
15	70	(483)	55	(380)	...	...	18
16	50	(345)	40	(275)	65	(450)	20
17	35	(240)	25	(170)	45	(310)	24
18	90	(620)	70	(483)	...	...	15
18[C]	90	(620)	70	(483)	...	...	12
18[D]	125	(860)	105	(725)	...	...	10
19[E]	115	(793)	110	(759)	...	...	15
19[B]	135	(930)	130	(897)	159	(1096)	10
19[F]	165	(1138)	160	(1103)	185	(1276)	5
20[E]	115	(793)	110	(759)	...	...	15
20[B]	135	(930)	130	(897)	159	(1096)	10
20[F]	165	(1138)	160	(1103)	185	(1276)	5
21[E]	115	(793)	110	(759)	...	...	15
21[B]	140	(966)	130	(897)	159	(1096)	15
21[F]	170	(1172)	160	(1103)	185	(1276)	8
23	120	(828)	110	(759)	...	...	10
23[C]	120	(828)	110	(759)	...	...	7.5[G], 6.0[H]
24	130	(895)	120	(828)	...	...	10
25	130	(895)	120	(828)	...	...	10
26	50	(345)	40	(275)	65	(450)	20
27	35	(240)	25	(170)	45	(310)	24
28	90	(620)	70	(483)	...	...	15
28[C]	90	(620)	70	(483)	...	...	12
28[D]	125	(860)	105	(725)	...	...	10
29	120	(828)	110	(759)	...	...	10
29[C]	120	(828)	110	(759)	...	...	7.5[G], 6.0[H]
33	50	(345)	40	(275)	65	450	20
34	65	(450)	55	(380)	80	550	18

[A] Properties for annealed condition except as noted.
[B] Properties for solution-treated and aged condition-Moderate strength (determined by aging temperature).
[C] Properties for material in transformed-beta condition.
[D] Properties for cold-worked and stress-relieved material.
[E] Properties for solution-treated condition.
[F] Properties for solution-treated and aged condition-High strength (determined by aging temperature).
[G] For product section or wall thickness values < 1.0 in.
[H] For product section or wall thickness values ≥ 1.0 in.

be removed providing the dimensional tolerances of Section 9 are not exceeded. Unless otherwise specified, the pipe shall be furnished free of scale.

11. Number of Tests

11.1 Samples for test shall be taken from one pipe for each 1000 ft (300 m), but in no case shall less than one pipe be tested, selected at random, from each lot. Results of the following tests shall be reported to the purchaser or his representative.

11.1.1 One tension test from each pipe selected.

11.1.2 The flattening test specified in 15.1.

11.1.3 The bend test, required by 14.1, when specified by the purchaser.

11.2 If any test specimen shows defective machining or develops flaws due to the preparation, the specimen may be discarded and another substituted.

11.3 If the percentage of elongation of any tension test specimen is less than that specified in 8.1, and any part of the fracture is more than $\frac{3}{4}$ in. (19 mm) from the center of the gage length as indicated by scratches marked on the specimen being testing, the specimen may be discarded and another substituted.

11.4 Each length of pipe shall be subjected to the hydrostatic test specified in 16.1 and 16.2.

12. Retests

12.1 If the chemical or mechanical test results of any lot are not in conformance with the requirements of this specification, the lot may be retested at the option of the manufacturer. The frequency of the retest will be double the initial number of tests. If the results of the retest conform to the specification, then the retest values will become the test values for certification. Only original conforming test results or conforming retest results shall be reported to the purchaser. If the results for the retest fail to conform to the specification, the material will be rejected in accordance with Section 20.

13. Test Specimens and Methods of Testing

13.1 The test specimens and the tests required by this specification shall conform to those described in Test Methods and Definitions A 370.

13.2 All routine mechanical tests shall be made at room temperature.

13.3 The methods of analysis used shall be in accordance with Test Methods E 120, E 1409, and E 1447, as applicable, or as agreed upon between the manufacturer and the purchaser.

14. Bending Test

14.1 Pipe 2 in. (51 mm) and under in nominal diameter, shall be capable of being bent cold through 90° around a cylindrical mandrel which is twelve times the nominal diameter of the pipe, without developing cracks.

14.1.1 Grade 5, Grade 23, Grade 24, Grade 25, and Grade 29 are exempt from this requirement.

15. Flattening Test

15.1 Seamless pipe shall be capable of withstanding, without cracking, flattening under a load applied gradually at room temperature until the distance between the load platens is H inches. H is calculated as follows:

$$H, \text{ in (mm)} = \frac{(1 + e)t}{e + (t/D)} \quad (1)$$

where:

H = minimum flattened height, in. (mm),
t = nominal wall thickness, in. (mm) and,
D = nominal pipe diameter, in. (mm) (not pipe size), and

For Grades 1, 2, 3, 7, 11, 13, 14, and 16:

e = 0.04 through 1 in. pipe size, and
e = 0.06 over 1 in. pipe size.

For grades not shown above, the requirements for the flattening test shall be negotiated between the manufacturer and purchaser.

15.1.1 When low D-to-t ratio tubular products are tested, because the strain imposed due to geometry is unreasonably high on the inside surface at the six and twelve o'clock locations, cracks at these locations shall not be cause for rejection if the D-to-t ratio is less than ten (10).

15.2 All calculations are rounded to two decimal places. Examination for cracking shall be by the unaided eye.

16. Hydrostatic Test

16.1 Each length of pipe shall withstand, without showing bulges, leaks, or other defects, an internal hydro-

static pressure that will produce in the pipe wall a stress of 50% of the minimum specified yield strength at room temperature. This pressure shall be determined by the equation:

$$P = SEt/(R_o - 0.4t) \quad (2)$$

where:

P = minimum hydrostatic test pressure, psi (or MPa),
S = allowable fiber stress of one-half the minimum yield strength, psi (or MPa),
t = wall thickness, in. (or mm),
R_o = outside tube radius, in. (or mm), and
E = 1.0 seamless pipe.

16.2 The maximum hydrostatic test pressure shall not exceed 2500 psi (17.2 MPa) for sizes 3 in. (76 mm) and under, or 2800 psi (19.3 MPa) for sizes over 3 in. (76 mm). Hydrostatic pressure shall be maintained for not less than 5 s. When requested by the purchaser and so stated in the order, pipe in sizes 14 in. (356 mm) in diameter and smaller, shall be tested to one and one-half times the specified working pressure, provided the fiber stress corresponding to those test pressures does not exceed one-half the minimum specified yield strength of the material, as determined by the equation given in 16.1. When one and one-half times the working pressure exceeds 2800 psi (19.3 MPa), the hydrostatic test pressure shall be a matter of agreement between the manufacturer and the purchaser.

17. Referee Test and Analysis

17.1 In the event of disagreement between the manufacturer and the purchaser on the conformance of the material to the requirements of this specification, a mutually acceptable referee shall perform the tests in question. The referee's testing shall be used in determining conformance of this material to this specification.

18. Rounding-Off Procedure

18.1 For purposes of determining conformance with the specifications contained herein, an observed or a calculated value shall be rounded off to the nearest unit in the last right-hand significant digit used in expressing the limiting value. This is in accordance with the round-off method of Practice E 29.

19. Inspection

19.1 All tests and inspection shall be made prior to shipment and at the manufacturer's expense unless otherwise specified, and shall be so conducted as not to interfere unnecessarily with the operation of the works. When specified in the order, the manufacturer shall notify the purchaser in time so that the purchaser may have his inspector present to witness any part of the tests that may be desired.

20. Rejection

20.1 Material not conforming to this specification or to authorized modifications shall be subject to rejection. Unless otherwise specified, rejected materials may be returned to the manufacturer at the manufacturer's expense, unless the purchaser receives, within three weeks of notice of rejection, other instructions for disposition.

21. Certification

21.1 The manufacturer shall supply to the purchaser or his representative at least one copy of his report certifying that the material supplied has been inspected and tested in accordance with the requirements of this specification and that the results of chemical analysis and mechanical tests meet the requirements of this specification for the appropriate grade.

21.2 A certification shall be the basis of the acceptance of the material and shall state that the material conforms to the requirements of this specification. The manufacturer shall report in the certification the results of the chemical analyses and mechanical tests made in accordance with this specification.

22. Product Marking

22.1 Each length of pipe $\frac{3}{8}$ in. (9.5 mm) nominal diameter and larger, manufactured in accordance with this specification, shall be legibly marked, either by stenciling, stamping, or rolling the following data:

22.1.1 Manufacturer's private identification mark,

22.1.2 ASTM designation and revision date,

22.1.3 Grade of titanium,

22.1.4 Pipe size and schedule, and

22.1.5 Ingot and lot number.

22.2 On smaller than $\frac{3}{8}$ in. (9.5 mm) nominal diameter pipe which is bundled, the same information may be

legibly stamped on a metal tag securely attached to each bundle.

23. Packaging

23.1 The pipe shall be packaged in agreement with the manufacturer's standard practice, unless otherwise agreed to between the manufacturer and purchaser and so stated in the purchase order.

24. Keywords

24.1 pipe; seamless pipe; titanium; titanium alloy

SPECIFICATION FOR TITANIUM AND TITANIUM ALLOY WELDED PIPE

SB-862

(Identical with ASTM B 862-01 for all grades, except for 20.1, which requires mandatory certification, editorial changes, and corrections in 5.1 and Table 5, which designate the filler metals approved for use during welding.

All pipe welded with filler metal intended for applications under the rules of Section VIII-1 of the ASME Boiler and Pressure Vessel Code shall conform to the following: Manufacturer of such products are limited to manufacturers holding the appropriate ASME Certificate of Authorization and Code Symbol Stamp. In addition to conforming to this specification, the manufacturer shall meet all applicable requirements of Section VIII-1 of the Code. The plate used to fabricate the pipe shall conform to SB-265. The product shall be subject to all applicable requirements of Section VIII-1 of the Code including welding, heat treatment, nondestructive examination, authorized inspection at the point of manufacture, and application of the Code Symbol Stamp.

The applicable ASME Partial Data Report Form signed by an Authorized Inspector and a certified mill test report shall be furnished for each lot of pipe. The term "lot" applies to all pipe of the same mill heat of material and wall thickness, which is heat-treated, if applicable in one furnace charge. For pipe that is not heat treated, or that is heat treated in a continuous furnace, a lot shall consist of each 200 ft (61 m) or fraction thereof of all pipe if the same mill heat treat and wall thickness subjected to the same heat treatment. For pipe that is heat treated in a batch-type furnace that is controlled within a 50°F range and is equipped with recording pyrometers so that the heating records are available, a lot may be defined the same as for continuous furnaces. Each length of pipe shall be marked in such a manner to identify each such piece with the "lot" and the certified mill test report.)

1. Scope

1.1 This specification covers the requirements for 26 grades of titanium and titanium alloy welded pipe intended for general corrosion resisting and elevated temperature service as follows:

1.1.1 *Grade 1* — Unalloyed titanium, low oxygen,

1.1.2 *Grade 2* — Unalloyed titanium, standard oxygen,

1.1.3 *Grade 3* — Unalloyed titanium, medium oxygen,

1.1.4 *Grade 5* — Titanium alloy (6% aluminum, 4% vanadium),

1.1.5 *Grade 7* — Unalloyed titanium plus 0.12% to 0.25% palladium, standard oxygen,

1.1.6 *Grade 9* — Titanium alloy (3% aluminum, 2.5% vanadium),

1.1.7 *Grade 11* — Unalloyed titanium plus 0.12% to 0.25% palladium, low oxygen,

1.1.8 *Grade 12* — Titanium alloy (0.3% molybdenum, 0.8% nickel),

1.1.9 *Grade 13* — Titanium alloy (0.5% nickel, 0.05% ruthenium), low oxygen,

1.1.10 *Grade 14* — Titanium alloy (0.5% nickel, 0.05% ruthenium), standard oxygen,

1.1.11 *Grade 15* — Titanium alloy (0.5% nickel, 0.05% ruthenium), medium oxygen,

1.1.12 *Grade 16* — Unalloyed titanium plus 0.04% to 0.08% palladium, standard oxygen,

1.1.13 *Grade 17* — Unalloyed titanium plus 0.04% to 0.08% palladium, low oxygen,

1.1.14 *Grade 18* — Titanium alloy (3% aluminum, 2.5% vanadium plus 0.04% to 0.08% palladium),

1.1.15 *Grade 19* — Titanium alloy (3% aluminum, 8% vanadium, 6% chromium, 4% zirconium, 4% molybdenum),

1.1.16 *Grade 20* — Titanium alloy (3% aluminum, 8% vanadium, 6% chromium, 4% zirconium, 4% molybdenum) plus 0.04% to 0.08% palladium,

1.1.17 *Grade 21* — Titanium alloy (15% molybdenum, 3% aluminum, 2.7% niobium, 0.25% silicon),

1.1.18 *Grade 23* — Titanium alloy (6% aluminum, 4% vanadium, extra low interstitial, ELI),

1.1.19 *Grade 24* — Titanium alloy (6% aluminum, 4% vanadium) plus 0.04% to 0.08% palladium,

1.1.20 *Grade 25* — Titanium alloy (6% aluminum, 4% vanadium) plus 0.3% to 0.8% nickel and 0.04% to 0.08% palladium,

1.1.21 *Grade 26* — Unalloyed titanium plus 0.08% to 0.14% ruthenium,

1.1.22 *Grade 27* — Unalloyed titanium plus 0.08% to 0.14% ruthenium,

1.1.23 *Grade 28* — Titanium alloy (3% aluminum, 2.5% vanadium) plus 0.08% to 0.14% ruthenium,

1.1.24 *Grade 29* — Titanium alloy [6% aluminum, 4% vanadium with extra low interstitial elements (ELI)] plus 0.08% to 0.14% ruthenium,

1.1.25 *Grade 33* — Titanium alloy (0.4% nickel, 0.015% palladium, 0.025% ruthenium, 0.15% chromium), and

1.1.26 *Grade 34* — Titanium alloy (0.4% nickel, 0.015% palladium, 0.025% ruthenium, 0.15% chromium).

1.2 Pipe 8 in. NPS (nominal pipe size) and larger is most frequently custom made for an order. In such cases, the purchaser carefully should consider the applicability of this specification. Since the pipe is custom made, the purchaser may choose a wall thickness other than those in Table 1 to meet specific operating conditions. The purchaser may also be better served to specify only the portions of this specification that are required to meet the operating conditions (for example, annealing, flattening test, chemistry, properties, etc.)

1.3 The values stated in inch-pound units are to be regarded as standard. The values given in parentheses are for information only.

1.4 Optional supplementary requirements are provided for pipe where a greater degree of testing is desired. These supplementary requirements may be invoked by the purchaser, when desired, by specifying in the order.

2. Referenced Documents

2.1 *ASTM Standards:*

A 370 Test Methods and Definitions for Mechanical Testing of Steel Products

B 600 Guide for Descaling and Cleaning Titanium and Titanium Alloy Surfaces

E 8 Test Methods for Tension Testing of Metallic Materials

E 29 Practice for Using Significant Digits in Test Data to Determine Conformance with Specifications

E 120 Test Methods for Chemical Analysis of Titanium and Titanium Alloys

E 1409 Test Method for Determination of Oxygen in Titanium and Titanium Alloys by the Inert Gas Fusion Technique

E 1417 Practice for Liquid Penetrant Examination

E 1447 Test Method for Determination of Hydrogen in Titanium and Titanium Alloys by the Inert Gas Fusion Thermal Conductivity Method

2.2 *ANSI/ASME Standards:*

B 36.19M-1985 Stainless Steel Pipe

ASME Boiler and Pressure Vessel Code, Section VIII

3. Terminology

3.1 *Definitions:*

3.1.1 *lot* — a number of pieces of pipe of the same nominal size and wall thickness manufactured by the same process from a single heat of titanium or titanium alloy and heat treated by the same furnace parameters in the same furnace.

3.1.2 *welded pipe* — a hollow tubular product produced by forming flat-rolled product and seam welding to make a right circular cylinder.

4. Ordering Information

4.1 Orders for materials under this specification shall include the following information as required:

4.1.1 Quantity,

4.1.2 Grade number (Section 1 and Table 2),

4.1.3 Nominal pipe size and schedule (Table 1),

4.1.4 Diameter tolerance (see 9.2),

4.1.5 Method of manufacture and finish (Sections 5 and 10),

4.1.6 Product analysis, if required (Sections 6 and 7; Table 2 and Table 3),

4.1.7 Mechanical properties, (Sections 8, 11, 13, 14, and 15, and Table 4),

TABLE 1 DIMENSIONS OF PIPE

NPS Desig.	Outside Dia.		Nominal Wall Thickness															
			Schedule 5S[A]		Schedule 5[A]		Schedule 10S[A]		Schedule 10[A]		Schedule 40S		Schedule 40		Schedule 80S		Schedule 80	
	in	mm	in	mm	in	mm	in	mm	in	mm	in	mm	in	mm	in	mm	in	mm
1/8	0.405	10.29	x	x	x	x	0.049	1.24	0.049	1.24	0.068	1.73	0.068	1.73	0.095	2.41	0.095	2.41
1/4	0.540	13.72	x	x	x	x	0.065	1.65	0.065	1.65	0.088	2.24	0.088	2.24	0.119	3.02	0.119	3.02
3/8	0.675	17.15	x	x	x	x	0.065	1.65	0.065	1.65	0.091	2.31	0.091	2.31	0.126	3.20	0.126	3.20
1/2	0.840	21.34	0.065	1.65	0.065	1.65	0.083	2.11	0.083	2.11	0.109	2.77	0.109	2.77	0.147	3.73	0.147	3.73
3/4	1.050	26.67	0.065	1.65	0.065	1.65	0.083	2.11	0.083	2.11	0.113	2.87	0.113	2.87	0.154	3.91	0.154	3.91
1	1.315	33.40	0.065	1.65	0.065	1.65	0.109	2.77	0.109	2.77	0.133	3.38	0.133	3.38	0.179	4.55	0.179	4.55
1-1/4	1.660	42.16	0.065	1.65	0.065	1.65	0.109	2.77	0.109	2.77	0.140	3.56	0.140	3.56	0.191	4.85	0.191	4.85
1-1/2	1.900	48.26	0.065	1.65	0.065	1.65	0.109	2.77	0.109	2.77	0.145	3.68	0.145	3.68	0.200	5.08	0.200	5.08
2	2.375	60.32	0.065	1.65	0.065	1.65	0.109	2.77	0.109	2.77	0.154	3.91	0.154	3.91	0.218	5.54	0.218	5.54
2-1/2	2.875	73.02	0.083	2.11	0.083	2.11	0.120	3.05	0.120	3.05	0.203	5.16	0.203	5.16	0.276	7.01	0.276	7.01
3	3.500	88.90	0.083	2.11	0.083	2.11	0.120	3.05	0.120	3.05	0.216	5.49	0.216	5.49	0.300	7.62	0.300	7.62
3-1/2	4.000	101.60	0.083	2.11	0.083	2.11	0.120	3.05	0.120	3.05	0.226	5.74	0.226	5.74	0.318	8.08	0.318	8.08
4	4.500	114.30	0.083	2.11	0.083	2.11	0.120	3.05	0.120	3.05	0.237	6.02	0.237	6.02	0.337	8.56	0.337	8.56
5	5.563	141.30	0.109	2.77	0.109	2.77	0.134	3.40	0.134	3.40	0.258	6.55	0.258	6.55	0.375	9.53	0.375	9.53
6	6.625	168.27	0.109	2.77	0.109	2.77	0.134	3.40	0.134	3.40	0.280	7.11	0.280	7.11	0.432	10.97	0.432	10.97
8	8.625	219.07	0.109	2.77	0.109	2.77	0.148	3.76	0.148	3.76	0.322	8.18	0.322	8.18	0.500	12.70	0.500	12.70
10	10.75	273.05	0.134	3.40	0.134	3.40	0.165	4.19	0.165	4.19	0.365	9.27	0.365	9.27	0.500	12.70	0.594	15.09
12	12.75	323.85	0.156	3.96	0.156	3.96	0.180	4.57	0.180	4.57	0.375	9.53	0.406	10.31	0.500	12.70	0.688	17.48
14	14.00	355.60	0.156	3.96	0.156	3.96	0.188	4.78	0.250	6.35	x	x	0.438	11.13	x	x	0.750	19.05
16	16.00	406.40	0.165	4.19	0.165	4.19	0.188	4.78	0.250	6.35	x	x	0.500	12.70	x	x	0.844	21.44
18	18.00	457.20	0.165	4.19	0.165	4.19	0.188	4.78	0.250	6.35	x	x	0.562	14.27	x	x	0.938	23.83
20	20.00	508.00	0.188	4.78	0.188	4.78	0.218	5.54	0.250	6.35	x	x	0.594	15.09	x	x	1.031	26.19
22	22.00	558.80	0.188	4.78	0.188	4.78	0.218	5.54	0.250	6.35	x	x	x	x	x	x	1.125	28.58
24	24.00	609.60	0.218	5.54	0.218	5.54	0.250	6.35	0.250	6.35	x	x	0.688	17.48	x	x	1.219	30.96
26	26.00	660.40	x	x	x	x	x	x	0.312	7.92	x	x	x	x	x	x	x	x
28	28.00	711.20	x	x	x	x	x	x	0.312	7.92	x	x	x	x	x	x	x	x
30	30.00	762.00	0.250	6.35	0.250	6.35	0.312	7.92	0.312	7.92	x	x	x	x	x	x	x	x
32	32.00	812.80	x	x	x	x	x	x	0.312	7.92	x	x	0.688	17.48	x	x	x	x
34	34.00	863.60	x	x	x	x	x	x	0.312	7.92	x	x	0.688	17.48	x	x	x	x
36	36.00	914.40	x	x	x	x	x	x	0.312	7.92	x	x	0.750	19.05	x	x	x	x

NOTE 1 — Schedule sizes conform to ANSI/ASME B36.19 (for "S" sizes) or B36.10 (for non-S sizes).
NOTE 2 — The decimal thickness listed for the respective pipe sizes represent their nominal wall dimensions.

[A] Threading not permitted in accordance with ANSI B.1.20.1

TABLE 2 CHEMICAL REQUIREMENTS[A]

Element	Composition, %							
	Grade 1	Grade 2	Grade 3	Grade 5	Grade 7	Grade 9	Grade 11	Grade 12
Nitrogen, max	0.03	0.03	0.05	0.05	0.03	0.03	0.03	0.03
Carbon, max	0.08	0.08	0.08	0.08	0.08	0.08	0.08	0.08
Hydrogen,[B,C] max	0.015	0.015	0.015	0.015	0.015	0.015	0.015	0.015
Iron, max	0.20	0.30	0.30	0.40	0.30	0.25	0.20	0.30
Oxygen, max	0.18	0.25	0.35	0.20	0.25	0.15	0.18	0.25
Aluminum	...	...	...	5.5–6.75	...	2.5–3.5	...	...
Vanadium	...	...	...	3.5–4.5	...	2.0–3.0	...	...
Tin	...	...	...	...	...	...	...	...
Ruthenium	...	...	...	...	...	...	...	...
Palladium	...	...	...	...	0.12–0.25	...	0.12–0.25	...
Cobalt	...	...	...	...	...	...	...	...
Molybdenum	...	...	...	...	...	...	...	0.2–0.4
Chromium	...	...	...	...	...	...	...	...
Nickel	...	...	...	...	...	...	...	0.6–0.9
Niobium	...	...	...	...	...	...	...	...
Zirconium	...	...	...	...	...	...	...	...
Silicon	...	...	...	...	...	...	...	...
Residuals,[D,E,F] max each	0.1	0.1	0.1	0.1	0.1	0.1	0.1	0.1
Residuals,[D,E,F] max total	0.4	0.4	0.4	0.4	0.4	0.4	0.4	0.4
Titanium[G]	balance	balance	balance	balance	balance	balance	balance	balance

Element	Composition, %									
	Grade 13	Grade 14	Grade 15	Grade 16	Grade 17	Grade 18	Grade 19	Grade 20	Grade 21	Grade 23
Nitrogen, max	0.03	0.03	0.05	0.03	0.03	0.03	0.03	0.03	0.03	0.03
Carbon, max	0.08	0.08	0.08	0.08	0.08	0.08	0.05	0.05	0.05	0.08
Hydrogen,[B,C] max	0.015	0.015	0.015	0.015	0.015	0.015	0.02	0.02	0.015	0.0125
Iron, max	0.20	0.30	0.30	0.30	0.20	0.25	0.30	0.30	0.40	0.25
Oxygen, max	0.10	0.15	0.25	0.25	0.18	0.15	0.12	0.12	0.17	0.13
Aluminum	...	...	...	...	...	2.5–3.5	3.0–4.0	3.0–4.0	2.5–3.5	5.5–6.5
Vanadium	...	...	...	...	...	2.0–3.0	7.5–8.5	7.5–8.5	...	3.5–4.5
Tin	...	...	...	...	...	...	...	...	...	...
Ruthenium	0.04–0.06	0.04–0.06	0.04–0.06	...	...	...	...	...	...	...
Palladium	...	...	...	0.04–0.08	0.04–0.08	0.04–0.08	...	0.04–0.08	...	...
Cobalt	...	...	...	...	...	...	...	...	...	...
Molybdenum	...	...	...	...	...	...	3.5–4.5	3.5–4.5	14.0–16.0	...
Chromium	...	...	...	...	...	...	5.5–6.5	5.5–6.5	...	...
Nickel	0.4–0.6	0.4–0.6	0.4–0.6	...	...	...	...	...	...	...
Niobium	...	...	...	...	...	...	...	...	2.2–3.2	...
Zirconium	...	...	...	...	...	...	3.5–4.5	3.5–4.5	...	...
Silicon	...	...	...	...	...	...	...	...		
Residuals,[D,E,F] max each	0.1	0.1	0.1	0.1	0.1	0.1	0.15	0.15	0.1	0.1
Residuals,[D,E,F] max total	0.4	0.4	0.4	0.4	0.4	0.4	0.4	0.4	0.4	0.4
Titanium[G]	balance	balance	balance	balance	balance	balance	balance	balance	balance	balance

TABLE 2 CHEMICAL REQUIREMENTS (CONT'D)

Element	Composition, %							
	Grade 24	Grade 25	Grade 26	Grade 27	Grade 28	Grade 29	Grade 33	Grade 34
Nitrogen, max	0.05	0.05	0.03	0.03	0.03	0.03	0.03	0.05
Carbon, max	0.08	0.08	0.08	0.08	0.08	0.08	0.08	0.08
Hydrogen,[B,C] max	0.015	0.0125	0.015	0.015	0.015	0.015	0.015	0.015
Iron, max	0.40	0.40	0.30	0.20	0.25	0.25	0.30	0.30
Oxygen, max	0.20	0.20	0.25	0.18	0.15	0.13	0.25	0.35
Aluminum	5.5–6.75	5.5–6.75	...	...	2.5–3.5	5.5–6.5	...	...
Vanadium	3.5–4.5	3.5–4.5	...	...	2.0–3.0	3.5–4.5	...	...
Tin	...	...	...	...	...	...	...	...
Ruthenium	...	...	0.08–0.14	0.08–0.14	0.08–0.14	0.08–0.14	0.02–0.04	0.02–0.04
Palladium	0.04–0.08	0.04–0.08	...	...	...	...	0.01–0.02	0.01–0.02
Cobalt	...	...	...	...	...	...	...	...
Molybdenum	...	...	...	...	...	...	...	...
Chromium	...	...	...	...	...	...	0.1–0.2	0.1–0.2
Nickel	...	0.3–0.8	...	...	...	...	0.35–0.55	0.35–0.55
Niobium	...	...	...	...	...	...	...	...
Zirconium	...	...	...	...	...	...	...	...
Silicon	...	...	...	...	...	...	...	...
Residuals,[D,E,F] max each	0.1	0.1	0.1	0.1	0.1	0.1	0.1	0.1
Residuals,[D,E,F] max each	0.4	0.4	0.4	0.4	0.4	0.4	0.4	0.4
Titanium[G]	balance	balance	balance	balance	balance	balance	Remainder	Remainder

[A] Analysis shall be completed for all elements listed in this table for each grade. The analysis results for the elements not quantified in the table need not be reported unless the concentration level is greater than 0.1% each or 0.4% total.

[B] Lower hydrogen may be obtained by negotiation with the manufacturer.

[C] Final product analysis.

[D] Need not be reported.

[E] A residual is an element present in a metal or an alloy in small quantities and is inherent to the manufacturing process but not added intentionally. In titanium these elements include aluminum, vanadium, tin, chromium, molybdenum, niobium, zirconium, hafnium, bismuth, ruthenium, palladium, yttrium, copper, silicon, cobalt, tantalum, nickel, boron, manganese, and tungsten.

[F] The purchaser may, in his written purchase order, request analysis for specific residual elements not listed in this specification.

[G] The percentage of titanium is determined by difference.

TABLE 3
PERMISSIBLE VARIATIONS IN PRODUCT ANALYSIS

Element	Product Analysis Limits, Max or Range, %	Permissible Variation in Product Analysis
Nitrogen	0.05	+0.02
Carbon	0.10	+0.02
Hydrogen	0.02	+0.002
Iron	0.50	+0.15
Oxygen	0.30	+0.03
Oxygen	0.31 to 0.40	±0.04
Aluminum	2.5 to 6.75	±0.40
Vanadium	2.0 to 4.5	±0.15
Vanadium	7.5 to 8.5	±0.40
Palladium	0.01 to 0.02	±0.002
Palladium	0.04 to 0.08	±0.005
Palladium	0.12 to 0.25	±0.02
Ruthenium	0.02 to 0.04	±0.005
Ruthenium	0.04 to 0.06	±0.005
Ruthenium	0.08 to 0.14	±0.01
Silicon	0.15 to 0.25	±0.02
Zirconium	3.5 to 4.5	±0.20
Chromium	0.1 to 0.2	±0.02
Chromium	5.5 to 6.5	±0.30
Niobium	2.2 to 3.2	±0.15
Molybdenum	0.2 to 0.4	±0.03
Molybdenum	3.5 to 4.5	±0.20
Molybdenum	14.0 to 16.0	±0.50
Nickel	0.3 to 0.9	±0.05
Residuals[A] (each)	0.15	+0.02

[A] A residual is an element in a metal or alloy in small quantities inherent to the manufacturing process but not added intentionally.

4.1.8 Packaging (Section 22),

4.1.9 Inspection and test reports (Sections 18, 19, and 20), and

4.1.10 Supplementary requirements.

5. Manufacture

5.1 Welded pipe shall be made from annealed flat-rolled products by a welding process that will yield a product meeting the requirements of this specification. As shown in Table 5, filler metal, if used, shall be of the same grade as the base metal. For Grade 16, filler metal of Grades 7 or 16 shall be used. For Grade 17, filler metal of Grade 11 or 17 shall be used.

5.1.1 Welded pipe may be further reduced by cold working or hot working. Cold reduced pipe shall be annealed after cold working at a temperature of not less than 1000°F. Hot worked pipe finished above 1400°F (760°C) need not be further heat treated.

5.2 Pipe shall be furnished as follows unless otherwise specified:

5.2.1 Grades 1, 2, 7, 11, 13, 14, 16, 17, and 33 shall be furnished as welded or annealed.

5.2.2 Grades 3, 12, 15, and 34 shall be furnished as annealed.

5.2.3 Grade 5, Grade 23, Grade 24, or Grade 25 shall be furnished as annealed, or aged.

5.2.4 Grade 9 or Grade 18 shall be furnished as annealed.

5.2.5 Grade 19, Grade 20, or Grade 21 shall be furnished as solution treated, or solution treated and aged.

6. Chemical Composition

6.1 The grades of titanium and titanium alloy metal covered by this specification shall conform to the requirements of the chemical compositions shown in Table 2.

6.1.1 The elements listed in Table 2 are intentional alloy additions or elements that are inherent to the manufacture of titanium sponge, ingot, or mill product.

6.1.1.1 Elements other than those listed in Table 2 are deemed to be capable of occurring in the grades

TABLE 4 TENSILE REQUIREMENTS[A]

Grade	Tensile Strength, min ksi	Tensile Strength, min (MPa)	Yield Strength (0.2% Offset) min. ksi	Yield Strength (0.2% Offset) min. (MPa)	Yield Strength (0.2% Offset) max. ksi	Yield Strength (0.2% Offset) max. (MPa)	Elongation 2 in. or 50 mm gage length, min %
1	35	(240)	25	(170)	45	(310)	24
2	50	(345)	40	(275)	65	(450)	20
3	65	(450)	55	(380)	80	(550)	18
5	130	(895)	120	(828)	...	...	10
5[B]	160	(1103)	150	(1034)	...	...	6
7	50	(345)	40	(275)	65	(450)	20
9	90	(620)	70	(483)	...	...	15
11	35	(240)	25	(170)	45	(310)	24
12	70	(483)	50	(345)	...	...	18
13	40	(275)	25	(170)	...	...	24
14	60	(410)	40	(275)	...	...	20
15	70	(483)	55	(380)	...	...	18
16	50	(345)	40	(275)	65	(450)	20
17	35	(240)	25	(170)	45	(310)	24
18	90	(620)	70	(483)	...	...	15
19[C]	115	(793)	110	(759)	...	...	15
19[B]	135	(930)	130	(897)	159	(1096)	10
19[B]	165	(1138)	160	(1103)	185	(1276)	5
20[C]	115	(793)	110	(759)	...	...	15
20[B]	135	(930)	130	(897)	159	(1096)	10
20[B]	165	(1138)	160	(1103)	185	(1276)	5
21[C]	115	(793)	110	(759)	...	...	15
21[B]	140	(966)	130	(897)	159	(1096)	15
21[B]	170	(1172)	160	(1104)	185	(1276)	8
23	120	(828)	110	(759)	...	...	10
24	130	(895)	120	(828)	...	...	10
25	130	(895)	120	(828)	...	...	10
26	50	(345)	40	(275)	65	(450)	20
27	35	(240)	25	(170)	45	(310)	24
28	90	(620)	70	(483)	...	...	15
29	120	(828)	110	(759)	...	...	10
33	50	345	40	275	65	450	20
34	65	450	55	380	80	550	18

[A] Properties for as welded or annealed condition except as noted.
[B] Properties for material in the solution treated and aged condition.
[C] Properties for material in the solution treated condition.

listed in Table 2 by and only by way of unregulated or unanalyzed scrap additions to the ingot melt. Therefore, product analysis for elements not listed in Table 2 shall not be required unless specified and shall be considered to be in excess of the intent of this specification.

6.1.2 Elements intentionally added to the melt must be identified, analyzed, and reported in the chemical analysis.

6.2 When agreed upon by the producer and purchaser and requested by the purchaser in a written purchase order, chemical analysis shall be completed for specific residual elements not listed in this specification.

6.3 At least two samples for chemical analysis shall be tested to determine chemical composition. Samples shall be taken from the ingot or the opposite extremes of the product to be analyzed.

7. Product Analysis

7.1 When requested by the purchaser and stated in the purchase order, an analysis of chemical composition shall be made on the finished product.

7.2 The product analysis tolerances listed in Table 3 do not broaden the specified analysis requirements but cover variations between different laboratories in the measurement of chemical content. The manufacturer shall not ship finished product outside of the limits specified in Table 2 for the applicable grade.

TABLE 5
PERMISSIBLE FILLER METAL

Base Metal	Filler Metal
Grade 1	Grade 1
Grade 2	Grade 2
Grade 3	Grade 3
Grade 5	Grade 5
Grade 7	Grade 7
Grade 9	Grade 9
Grade 11	Grade 11
Grade 12	Grade 12
Grade 13	Grade 13
Grade 14	Grade 14
Grade 15	Grade 15
Grade 16	Grade 7, 16
Grade 17	Grade 11 or 17
Grade 18	Grade 18
Grade 19	Grade 19
Grade 20	Grade 20
Grade 21	Grade 21
Grade 23	Grade 23
Grade 24	Grade 24
Grade 25	Grade 25
Grade 33	Grade 33
Grade 34	Grade 34

8. Tensile Requirements

8.1 The tensile properties of the pipe, in the condition specified, shall conform to the room temperature requirements of Table 4. Mechanical properties for other conditions may be established by written agreement between the manufacturer and the purchaser.

9. Permissible Variations in Dimensions

9.1 A system of standard pipe sizes approved by ANSI as American National Standard for Stainless Steel Pipe (ANSI/ASME B36.19M-1985) reproduced as Table 1 shall apply.

9.2 Permissible variations in dimensions at any point in the length of the pipe shall conform to the following:

9.2.1 Variations in outside diameter, unless otherwise specified, shall not exceed the limits prescribed in Table 6. For diameters greater than 30 in., the diameter shall not exceed ±0.5% of the specified outside diameter. The tolerances on the outside diameter include ovality except as provided for in 9.2.2 and 9.2.3.

9.2.2 Thin-wall pipe usually develops significant ovality (out-of-roundness) during final annealing, straightening, or both. Thin-wall pipe are defined as having a wall thickness of 3% or less of the outside diameter.

9.2.3 The diameter tolerances of Table 6 are not sufficient to provide for additional ovality expected in thin-wall pipe and are applicable only to the mean of the extreme (maximum and minimum) outside diameter readings in any one cross section. However, for thin-wall pipe the difference in extreme outside diameter readings (ovality) in any one cross section shall not exceed 1.5% of the specified outside diameter.

9.2.4 Straightness shall be determined by using a 10 ft (3 m) straight edge placed so that both ends of the straight edge are in contact with the pipe. The separation between the straight edge and the pipe shall not exceed 0.250 in. at any point.

9.2.5 Thickness of the wall shall be measured by any appropriate means. The variation in thickness at any point shall not be more than ±12.5% of the nominal wall thickness specified, unless otherwise agreed upon between the purchaser and manufacturer at the time of the order. Maximum reinforcement of the weld shall conform to the values prescribed in Table 6.

9.2.6 *Length*— Pipe shall be furnished in lengths as specified in the purchase order. The length tolerance for pipe ordered in specified lengths of 24 ft or less shall be plus ¼ in. (6.4 mm) minus zero. Random lengths of pipe and lengths of pipe over 24 ft may be ordered and the maximum and minimum lengths supplied shall be specified in a purchase order.

10. Finish

10.1 The finished pipe shall be straight and shall have smooth ends, be free of burrs, and shall be free of injurious external and internal imperfections. Minor defects may be removed, providing the dimensional tolerances of Section 17 are not exceeded. Unless otherwise specified, the pipe shall be furnished free of scale.

11. Number of Tests

11.1 Tests shall be made as follows on 2% of the process length pipes selected at random, from each lot, but in no case shall less than one pipe be tested. Results of the following tests shall be reported to the purchaser or their representative.

11.1.1 One tension test from each pipe selected.

11.1.2 The guided bend test or flattening test specified in 14.1 and 14.2.

11.2 If any test specimen shows defective machining or develops flaws due to the preparation, the specimen may be discarded and another substituted.

11.3 If the percentage of elongation of any tension test specimen is less than that specified in 8.1, and any

TABLE 6
PERMISSIBLE VARIATIONS IN DIAMETER

Nominal Outside Diameter (NPS)[A]	Permissible Variations in Outside Diameter	
	Over	Under
1/8 in. to 1 1/2 in. (3.2 mm to 38 mm)	1/64 in. (0.397 mm)	1/32 in. (0.794 mm)
over 1 1/2 in. to 4 in. (38 mm to 102 mm)	1/32 in. (0.794 mm)	1/32 in. (0.794 mm)
over 4 in. to 8 in. (102 mm to 203 mm)	1/16 in. (1.588 mm)	1/32 in. (0.794 mm)
over 8 in. to 18 in. (203 mm to 432 mm)	3/32 in. (2.382 mm)	1/32 in. (0.794 mm)
over 18 in. to 26 in. (432 mm to 660 mm)	1/8 in. (3.175 mm)	1/32 in. (0.794 mm)
over 26 in. to 30 in. (660 mm to 762 mm)	5/32 in. (3.969 mm)	1/32 in. (0.794 mm)

[A] NPS = nominal pipe size.

part of the fracture is more than 3/4 in. (19 mm) from the center of the gage length as indicated by scratches marked on the specimen before testing, the specimen may be discarded and another substituted.

11.4 Each length of pipe shall be subjected to the hydrostatic test specified in 15.1 and 15.2.

12. Retests

12.1 If the chemical or mechanical test results of any lot are not in conformance with the requirements of this specification, the lot may be retested at the option of the manufacturer. The frequency of the retest will be double the initial number of tests. If the results of the retest conform to the specification, then the retest values will become the test values for certification. Only original conforming test results or conforming retest results shall be reported to the purchaser. If the results for the retest fail to conform to the specification, the material will be rejected in accordance with Section 19.

13. Test Specimens and Methods of Testing

13.1 The test specimens and the tests required by this specification shall conform to those described in Test Methods and Definitions A 370. Test specimens shall be cut from the welded pipe except as specified in 13.2.

13.2 For pipe sizes over 14 in. outside diameter, a prolongation made from the same heat of raw material and subjected to all welding and heat treatment procedures as the ordered pipe may be used for mechanical property testing instead of testing the ordered pipe.

13.3 All routine mechanical tests shall be made at room temperature.

13.4 For referee purposes, Test Methods A 370, E 8, E 120, E 1409, and E 1447 shall be used.

TABLE 7
MAXIMUM WELD REINFORCEMENT

Actual Material Thickness, in.	Maximum Reinforcement, in. (mm)	
	Circumferential Joints in Pipe	Other Welds
Less than 3/32	3/32 (2.832)	1/32 (0.794)
3/32 to 3/16, incl	1/8 (3.175)	1/16 (1.588)
Over 3/16 to 1/2, incl	5/32 (3.969)	3/32 (2.832)
Over 1/2 to 1, incl.	3/16 (4.764)	3/32 (2.832)
Over 1 to 2, incl.	1/4 (6.35)	1/8 (3.175)
Over 2 to 3, incl.	1/4 (6.35)	5/32 (3.969)
Over 3 to 4, incl.	1/4 (6.35)	7/32 (5.558)
Over 4 to 5, incl.	1/4 (6.35)	1/4 (6.35)
Over 5	5/16 (7.94)	5/16 (7.94)

14. Pipe Weld Quality Tests

14.1 Assessment of pipe weld quality shall be performed by either the flattening test or the guided bend test. Test specimens shall be selected randomly from each lot of pipe manufactured. Test plates of the same material may be attached to the pipe and welded as prolongations of the pipe longitudinal seam. See Table 7.

14.1.1 *Guided Bend Test*— For Grades 1, 2, 7, 11, 13, 14, 16, 17, and 33 a longitudinal or transverse guided bend test of the weld shall be performed in accordance

with the method outlined in the ASME Boiler and Pressure Vessel Code, Section VIII, Paragraph UNF-95. The ductility of the weld shall be considered acceptable when there is no evidence of cracks after bending in the weld or between the weld and the tube metal. Test specimens shall be randomly selected from the pipe manufactured in accordance with 13.1, 13.2, and 11.1.2.

14.1.2 For Grades 3, 5, 9, 12, 15, 18, 19, 20, 21, 23, 24, 25, and 34 the requirements for the guided bend test shall be negotiated between the manufacturer and the purchaser.

14.2 *Flattening Test*— Welded pipe in the final condition shall be capable of withstanding, without cracking, flattening under a load applied gradually at room temperature until the distance between the load platens is H inches. The weld shall be positioned at either 90° or 270° to the direction of the applied load. H is calculated as follows:

$$H, \text{ in. (mm)} = \frac{(1 + e)t}{e + (t/D)} \quad (1)$$

where:

H = minimum flattened height, in. (mm),
t = nominal wall thickness, in. (mm),
D = nominal pipe outside diameter, in. (mm) (not pipe size), and

For Grades 1, 2, 3, 7, 11, 13, 14, 16, and 17:

e = 0.04 through 1 in. pipe size, and
e = 0.06 over 1 in. pipe size.

For grades not shown above, the requirements for the flattening test shall be negotiated between the manufacturer and purchaser.

14.2.1 All calculations are rounded to two decimal places. Examination for cracking shall be by the unaided eye.

14.2.2 When low D-to-t ratio tubular products are tested, because the strain imposed due to geometry is unreasonably high on the inside surface at the six and twelve o'clock locations, cracks at these locations shall not be cause for rejection if the D-to-t ratio is less than ten (10).

15. Hydrostatic Test

15.1 Each length of pipe shall withstand, without showing bulges, leaks, or other defects, an internal hydrostatic pressure that will produce in the pipe wall a stress of 50% of the minimum specified yield strength at room temperature. This pressure shall be determined by the equation:

$$P = SEt/(R_o - 0.4t) \quad (2)$$

where:

P = minimum hydrostatic test pressure, psi (MPa),
S = allowable fiber stress of one-half the minimum yield strength, psi (MPa),
t = wall thickness, in. (mm),
R_o = outside tube radius, in. (mm), and
E = 0.85 for welded pipe.

15.2 The maximum hydrostatic test pressure shall not exceed 2500 psi (17.2 MPa) for sizes 3 in. (76 mm) and under, or 2800 psi (19.3 MPa) for sizes over 3 in. (76 mm). Hydrostatic pressure shall be maintained for not less than 5 s. When requested by the purchaser and so stated in the order, pipe in sizes 14 in. (356 mm) in diameter and smaller, shall be tested to one and one-half times the specified working pressure, provided the fiber stress corresponding to those test pressures does not exceed one-half the minimum specified yield strength of the material, as determined by the equation given in 15.1. When one and one-half times the working pressure exceeds 2800 psi (19.3 MPa), the hydrostatic test pressure shall be as agreed upon between the manufacturer and the purchaser.

16. Referee Test and Analysis

16.1 In the event of disagreement between the manufacturer and the purchaser on the conformance of the material to the requirements of this specification, a mutually acceptable referee shall perform the tests in question. The referee's testing shall be used in determining conformance of the material to this specification.

17. Rounding-Off Procedure

17.1 For purposes of determining conformance with the specifications contained herein, an observed or a calculated value shall be rounded off to the nearest "unit" in the last right-hand significant digit used in expressing the limiting value. This is in accordance with the round-off method of Practice E 29.

18. Inspection

18.1 All specified tests and inspection shall be made prior to shipment and at the manufacturer's expense unless otherwise specified, and shall be so conducted as not to interfere unnecessarily with the operation of the works. When purchaser inspection is specified in the

order, the manufacturer shall notify the purchaser in time so that the purchaser may have his inspector present to witness any part of the tests desired.

19. Rejection

19.1 Material not conforming to this specification or to authorized modifications shall be subject to rejection. Unless otherwise specified, rejected materials may be returned to the manufacturer at the manufacturer's expense, unless the purchaser receives, within three weeks of notice of rejection, other instructions for disposition.

19.2 Each length of pipe received from the manufacturer may be inspected by the purchaser. Pipe not meeting the requirements of this specification or requirements specified in a purchase order may be rejected and the manufacturer shall be notified. Disposition of rejected material shall be as stated in 19.1.

20. Certification

20.1 The manufacturer shall supply at least one copy of his report certifying that the material supplied has been manufactured, sampled, tested, and inspected in accordance with the requirements of this specification and that the results of chemical analysis and mechanical tests meet the requirements of this specification for the appropriate grade.

20.2 A certification shall be the basis of acceptance of the material and shall state that the material conforms to the requirements of this specification. The manufacturer shall report in the certification the results of the chemical analyses, mechanical property tests, and any supplementary tests made in accordance with this specification. If mechanical property testing was performed on a prolongation as specified in 13.2, the width of the gage length tested shall be reported in the certification.

21. Product Marking

21.1 Each length of pipe $\frac{3}{8}$ in. (9.5 mm) nominal diameter and larger, manufactured in accordance with this specification, shall be legibly marked, either by stenciling, stamping, or rolling the following data:

21.1.1 Manufacturer's private identification mark,

21.1.2 ASTM designation and revision date,

21.1.3 Grade of titanium,

21.1.4 Pipe size and schedule,

21.1.5 Heat number and lot number, and

21.1.6 Heat treatment condition, for example, annealed (ANN), solution treated (ST), solution treated and aged (STA), stress relieved (SR), not heat treated (No HT).

21.2 On smaller than $\frac{3}{8}$ in. (9.5 mm) nominal diameter pipe that is bundled, the same information may be stamped legibly on a metal tag securely attached to each bundle.

22. Packaging

22.1 The pipe shall be packaged in agreement with the manufacturer's standard practice, unless otherwise agreed to between the manufacturer and purchaser and so stated in the purchase order.

23. Keywords

23.1 pipe; titanium; titanium alloy; welded pipe

SUPPLEMENTARY REQUIREMENTS

One or more of the following supplementary requirements shall apply only when specified in the purchase order. Subject to agreement between the purchaser and manufacturer, retest and retreatment provisions of these supplementary requirements may be modified. The extent and quantity of tests to be performed shall be specified by the purchaser.

S1. Pipe Requiring Special Consideration

S1.1. *Liquid Penetrant Inspection:*

S1.1.1 Liquid penetrant inspection shall be performed on all weld surfaces on the outside diameter and a length up to 1.5 times the nominal diameter on the inside diameter weld. An acceptance standard shall be agreed upon between the purchaser and the manufacturer prior to acceptance of the order. At a minimum, procedures and acceptance shall meet the requirements of Practice E 1417. Evidence of S1.1.1 shall be required in the certification.

S1.2. *Radiographic Examination:*

S1.2.1 The entire length of weld in each welded pipe shall be examined radiographically, using x-radiation, in accordance with Paragraph UW-51 of Section VIII, Division 1 of the ASME Boiler and Pressure Vessel Code. In addition to the marking required by Section 22, each pipe shall be marked "RT" after the specification and grade. Evidence of S1.2.1 shall be required in the certification.

S1.2.2 Pipe welds shall be spot radiographed, using x-radiation, in accordance with Paragraph UW-52 of Section VIII, Division 1 of the ASME Boiler and Pressure Vessel Code. Evidence of S1.2.2 shall be required in the certification.

S1.3. *Stress Relief Heat Treatment:*

S1.3.1 The stress relieving heat treatment shall consist of holding the pipe at a minimum temperature of 1100°F for not less than 0.5 h/in. of wall thickness.

S1.3.2 Minimum time at temperature shall be 20 min. All stress relieved pipe shall be subsequently cleaned so as to be free of oxide scale in accordance with Guide B 600.

SPECIFICATION FOR GENERAL REQUIREMENTS FOR FLAT-ROLLED NICKEL AND NICKEL ALLOY PLATE, SHEET, AND STRIP

SB-906

(Identical with ASTM Specification B 906-00 except that certification has been made mandatory and editorial changes have been made.)

1. Scope

1.1 This specification covers a group of general requirements that, unless otherwise specified in the purchase order or in an individual specification, shall apply to rolled nickel and nickel alloy plate, sheet, and strip, under each of the following specifications issued by ASME Specifications: SB-127, SB-162, SB-168, SB-333, SB-409, SB-424, SB-434, SB-435, SB-443, SB-463, SB-536, SB-575, SB-582, SB-599, SB-620, SB-625, SB-688, and SB-709.

1.2 In case of any conflicting requirements, the requirements of the purchase order, the individual material specification, and this general specification shall prevail in the sequence named.

1.3 The values stated in inch-pound units are to be regarded as the standard. The values given in parentheses are for information only.

2. Referenced Documents

2.1 *ASTM Standards:*

A 262 Practices for Detecting Susceptibility to Intergranular Attack in Austenitic Stainless Steels

E 8 Test Methods for Tension Testing of Metallic Materials

E 10 Test Method for Brinell Hardness of Metallic Materials

E 18 Test Methods for Rockwell Hardness and Rockwell Superficial Hardness of Metallic Materials

E 29 Practice for Using Significant Digits in Test Data to Determine Conformance with Specifications

E 55 Practice for Sampling Wrought Nonferrous Metals and Alloys for Determination of Chemical Composition

E 112 Test Methods for Determining the Average Grain Size

E 140 Hardness Conversion Tables for Metals (Relationship among Brinell hardness, Vickers hardness, Rockwell hardness, Rockwell Superficial hardness, Knoop Hardness, and Scleroscope Hardness)

E 1473 Test Method for Chemical Analysis of Nickel, Cobalt, and High-Temperature Alloys

2.2 *AIAG Standard:*

B-5 Primary Metals Identification Tag Application Standard

2.3 *ANSI Standard:*

Accredited Standards Committee X 12 (ANSI ASC X 12)

2.4 *ASME Standard:*

ASME Boiler and Pressure Vessel Code, Section IX

2.5 *ASME Specifications:*

All those listed in 1.1.

3. Terminology

3.1 Definitions:

3.1.1 Plate, Sheet, Strip, and Cold work as used in this specification apply to the following:

3.1.1.1 *plate* — material $^{3}/_{16}$ in. (4.76 mm) and over in thickness and over 10 in. (250 mm) in width. Finishes for plate are actually shown in Section 13.

3.1.1.2 *sheet* — material under $^{3}/_{16}$ in. (4.76 mm) in thickness and 24 in. (600 mm) and over in width. Finishes for sheet are actually shown in Section 11.

3.1.1.3 *strip* — cold-rolled material under $^{3}/_{16}$ in. (4.76 mm) in thickness and under 24 in. (600 mm) in

width. Finishes are detailed in Section 12 for strip, and strip edges in Section 14 for Cold-Rolled Strip.

3.1.1.4 *cold work* — the changing of mechanical properties by work hardening.

4. Ordering Information

4.1 It is the responsibility of the purchaser to specify all requirements that are necessary for material ordered under this specification. Such requirements may include, but are not limited to, the following:

4.1.1 Quantity (weight and number of pieces),

4.1.2 Name of material,

4.1.3 Condition (hot-rolled, cold-rolled, annealed, heat-treated),

4.1.4 Finish (see Section 11 for Sheet, Section 12 for Strip, and Section 13 for Plates). In the case of polished finishes, specify whether one or both sides are to be polished,

4.1.5 Form (plate, sheet, or strip),

4.1.6 Dimensions (thickness, width, length),

4.1.6.1 Thickness shall be ordered to decimal or fractional thickness. The use of the gage number is discouraged as being an archaic term of limited usefulness not having general agreement on meaning. The gage number shall not be a basis for rejection.

4.1.6.2 Thickness, width, and length, when applicable, should be ordered in the same units, for example, 0.060 in. by 48 in. by 120 in. (1.52 mm by 1219 mm by 3048 mm),

4.1.7 Edge, strip only (see Section 14 for Cold-Rolled Strip),

4.1.8 Type, refer to the applicable material specification,

4.1.9 Specification designation and date of issue,

4.1.10 Additions to specification or special requirements,

4.1.11 Restrictions (if desired) on methods for determining yield strength (see appropriate footnote to mechanical properties table of the basic material specification),

4.1.12 Restrictions on weld repair (see Section 17),

4.1.13 Marking requirements (see Section 22),

4.1.14 Preparation for delivery (see Section 22), and over.

5. Process

5.1 The material shall be manufactured/produced by the following or as specified in the applicable material specification.

5.1.1 The material shall be made by one of the following processes: electric-arc, electric-induction, or other suitable processes.

5.1.2 If a specific type of melting is required by the purchaser, it shall be so specified on the purchase order.

5.1.3 If a specific type of remelt is required by the purchaser, it shall be so specified on the purchase order.

6. Chemical Composition

6.1 In case of disagreement, the chemical composition shall be determined in accordance with the following methods:

UNS No. Prefixes	ASTM Method
N02	E 39
N04	E 76
N06, N08	E 1473

6.2 The ladle analysis of the material shall conform to the chemical requirements prescribed by the individual product specification.

6.3 The product (check) analysis of the material shall meet the requirements of B 880.

7. Sampling

7.1 *Lots for Chemical Analysis and Mechanical Testing:*

7.1.1 A lot for chemical analysis shall consist of one heat.

7.1.2 A lot of plate, sheet, or strip for mechanical testing shall be defined as the material from one heat in the same condition and specified thickness.

7.2 *Sampling for Chemical Analysis:*

7.2.1 A representative sample shall be obtained from each heat during pouring or subsequent processing.

7.2.2 Product (check) analysis shall be wholly the responsibility of the purchaser.

7.3 *Sampling for Mechanical Testing* — Representative samples shall be taken from each lot of finished material.

8. Number of Tests and Retests

8.1 *Chemical Analysis* — One test per heat.

8.2 *Tension Tests* — One test per lot.

8.3 *Grain Size* — One test per lot.

8.4 *Retests* — If one of the specimens used in the above tests of any lot fails to meet the specified requirements, two additional specimens shall be taken from different sample pieces and tested. The results of the tests on both of these specimens shall meet the specified requirements.

Test Requirement	Rounded Unit for Observed or Calculated Value
Chemical composition and tolerances	nearest unit in the last righthand place of figures of the specified limit
Tensile strength and yield strength	nearest 1000 psi (7 MPa)
Elongation	nearest 1%

9. Specimen Preparation

9.1 Tension test specimens shall be taken from material in the final condition and tested transverse to the direction of rolling when width will permit.

9.2 Tension test specimens shall be any of the standard or subsize specimens shown in Test Methods E 8.

9.3 In the event of disagreement, referee specimens shall be as follows:

9.3.1 Full thickness of the material, machined to the form and dimensions shown for the sheet-type specimen in Test Methods E 8 for material under ½ in. (12.7 mm) in thickness.

9.3.2 The largest possible round specimen shown in Test Methods E 8 for material ½ in. (12.7 mm) and over.

10. Test Methods

10.1 The chemical composition and mechanical properties of the material as enumerated in this specification shall be determined, in case of disagreement, in accordance with the following ASTM standards:

10.1.1 *Chemical Analysis* — Test Methods E 1473. For elements not covered by Test Methods E 1473, the referee test method shall be as agreed upon between the manufacturer and the purchaser. The nickel composition shall be determined arithmetically by difference.

10.1.2 *Tension Test* — Test Methods E 8.

10.1.3 *Rockwell Hardness Test* — Test Methods E 18.

10.1.4 *Hardness Conversion* — Hardness Conversion Tables E 140.

10.1.5 *Grain Size* — Test Methods E 112.

10.1.6 *Determining Significant Places* — Practice E 29.

10.1.7 *Method of Sampling* — Practice E 55.

10.2 For purposes of determining compliance with the limits in this specification, an observed or calculated value shall be rounded in accordance with the rounding method of Practice E 29:

11. Finish for Sheet

11.1 The type of finish available on sheet products are:

11.1.1 No. 1 Finish — Hot-rolled, annealed, and descaled.

11.1.2 No. 2D Finish — Cold-rolled, dull finish.

11.1.3 No. 2B Finish — Cold-rolled, bright finish.

11.1.3.1 *Bright Annealed Finish* — A bright cold-rolled finish retained by final annealing in a controlled atmosphere furnace.

11.1.4 No. 3 Finish — Intermediate polished finish, one or both sides.

11.1.5 No. 4 Finish — General purpose polished finish, one or both sides.

11.1.6 No. 6 Finish — Dull stain finish, Tampico brushed, one or both sides.

11.1.7 No. 7 Finish — High luster finish.

11.1.8 No. 8 Finish — Mirror finish.

11.1.9 Sheets can be produced with one or two sides polished. When polished on one side only, the other side may be rough ground in order to obtain necessary flatness.

NOTE 1 — Explanation of Sheet Finishes:

No. 1 — This finish is produced by hot rolling to specified thickness followed by annealing and descaling. It is generally used in industrial applications, such as for heat and corrosion resistance, where smoothness of finish is not of particular importance.

No. 2D — Produced on either hand sheet mills or continuous mills by cold rolling to the specified thickness, annealing and descaling. The dull finish may result from the descaling or pickling operation or may be developed by a final light cold-rolled pass on dull rolls. The dull finish is favorable for retention of lubricants on the surface in deep drawing operations. This finish is generally used in forming deep-drawn articles which may be polished after fabrication.

No. 2B — Commonly produced the same as 2D, except that the annealed and descaled sheet receives a final light cold-rolled pass on polished rolls. This is a general purpose cold-rolled finish. It is commonly used for all but exceptionally difficult deep drawing applications. This finish is more readily polished that No. 1 or No. 2D Finish.

Bright Annealed Finish — is a bright cold-rolled highly reflective finish retained by final annealing in a controlled atmosphere furnace. The purpose of the atmosphere is to prevent scaling or oxidation during annealing. The atmosphere is usually comprised of either dry hydrogen

or a mixture of dry hydrogen and dry nitrogen (sometimes known as dissociated ammonia).

No. 3 — For use as a finish-polished surface or as a semifinished-polished surface when it is required to receive subsequent finishing operations following fabrication. Where sheet or articles made from it will not be subjected to additional finishing or polishing operations, No. 4 finish is recommended.

No. 4 — Widely used for restaurant equipment, kitchen equipment, store fronts, dairy equipment, etc. Following initial grinding with coarser abrasives, sheets are generally finished last with abrasives approximately 120 to 150 grit.

No. 6 — Has a lower reflectivity than No. 4 finish. It is produced by Tampico brushing No. 4 finish sheets in a medium of abrasive and oil. It is used for architectural applications and ornamentation where high luster is undesirable; it is also used effectively to contrast with brighter finishes.

No. 7 — Has a high degree of reflectivity. It is produced by buffing a finely ground surface, but the grit lines are not removed. It is chiefly used for architectural or ornamental purposes.

No. 8— the most reflective finish that is commonly produced. It is obtained by polishing with successively finer abrasives and buffing extensively with very fine buffing rouges. The surface is essentially free of grit lines from preliminary grinding operations. This finish is most widely used for press plate, as well as for small mirrors and reflectors.

12. Finish for Strip

12.1 The various types of finish procurable on cold-rolled strip products are:

12.1.1 *No. 1 Finish* — Cold rolled to specified thickness, annealed, and descaled.

12.1.2 *No. 2 Finish* — Same as No. 1 Finish, followed by a final light cold-roll pass, generally on highly polished rolls.

12.1.3 *Bright Annealed Finish* — A bright cold-rolled finish retained by final annealing in a controlled atmosphere furnace.

12.1.4 *Polished Finish* — Strip is also available in polished finishes such as No. 3 and No. 4, which are explained in Note 1.

13. Finish for Plates

13.1 The types of finish available on plates are:

13.1.1 *Hot-Rolled or Cold-Rolled, and Annealed or Heat Treated, and Blast Cleaned or Pickled* — Condition and finish commonly preferred for corrosion-resisting and most heat-resisting applications, essentially a No. 1 Finish.

13.1.2 Hot Rolled or cold-rolled, annealed or heat treated, blast cleaned and/or ground.

13.1.3 Hot Rolled or cold-rolled, annealed or heat treated, blast cleaned and/or ground, and pickled.

14. Edges for Cold-Rolled Strip

14.1 The types of edges available on strip products are:

14.1.1 No. 1 Edge — A rolled edge, either round or square as specified.

14.1.2 No. 3 Edge — An edge produced by slitting.

14.1.3 No. 5 Edge — An approximately square edge produced by rolling or filing after slitting.

15. Permissible Variations in Dimensions and Weight

15.1 *Sheet* — Sheet shall conform to the permissible variations in dimensions specified in Tables A1.1 through A1.7 for materials produced to specifications SB-463, SB-536, SB-599, SB-625, SB-688, SB-709 or SB-718; and for materials produced to specifications SB-333, SB-434, SB-435, SB-575, SB-582, or SB-620 and for materials produced to specifications SB-127, SB-162, SB-168, SB-409, SB-424, SB-443, SB-755 or SB-872.

15.2 *Cold-Rolled Strip* — Cold-rolled strip shall conform to the permissible variations in dimensions specified in Tables A1.1 through A1.11 for materials produced to specifications SB-463, SB-536, SB-599, SB-625, SB-688, or SB-709, Table A1.2 and Table A1.4 for materials produced to specifications SB-333, SB-434, SB-435, SB-575, SB-582, or SB-620, and Table A3.3 and Table A3.6 for materials produced to specifications SB-127, SB-162, SB-168, SB-409, SB-424, or SB-443.

15.3 *Plates* — Plates shall conform to the permissible variations in dimensions specified in Tables A1.12 through A1.18 for materials produced to specifications SB-463, SB-536, SB-599, SB-625, SB-688, SB-709 or SB-718; Table A2.2 and Table A2.3 for materials produced to specifications SB-333, SB-434, SB-435, SB-575, SB-582, SB-620, SB-814 or SB-818; and for materials produced to specifications SB-127, SB-162, SB-168, SB-409, SB-424, SB-443, SB-670, SB-755 or SB-872.

16. Workmanship

16.1 The material shall be of uniform quality consistent with good manufacturing and inspection practices. The material shall have no imperfections of a nature or degree, for the type and quality ordered, that will adversely affect the stamping, forming, machining,or fabrication of finished parts.

16.2 *Sheet, Strip, and Plate* — Sheet, and strip with No. 1 finish and plate with hot-roll anneal or hot-roll

anneal and pickle finish may be ground to remove surface imperfections, provided such grinding does not reduce the thickness or width at any point beyond the permissible variations in dimensions. An iron free abrasive wheel shall be used for such grinding and shall be operated in a speed ample to ensure that defective areas are cleanly cut out.

17. Repair of Plate by Welding

17.1 Repair of surface defects of plate, by welding, is permitted unless prohibited by other specifications or purchase order requirements.

17.2 Defect depth shall not exceed $\frac{1}{3}$ of the nominal thickness, and the total area shall not exceed 1% of the plate surface area, unless prior approval from the purchaser is obtained.

17.3 Unacceptable imperfections shall be suitably prepared for welding by grinding or machining. Open clean defects, such as pits or impressions, may not require preparation.

17.4 The welding procedure and the welders or welding operators shall be qualified in accordance with Section IX of the ASME Code.

17.5 The welding consumables shall be compatible with both the chemistry and mechanical properties of the base material.

17.6 After repair welding, the welded area shall be ground smooth and blended uniformly to the surrounding surface.

17.7 Weld repair, if performed, shall be reported on the test report in accordance with Section 21.

18. Inspection

18.1 Inspection of the material by the purchaser's representative at the producing plant shall be made as agreed upon between the purchaser and the seller as part of the purchase order.

18.2 Unless otherwise specified in the contract or purchase order: (1) the seller is responsible for the performance of all the inspection and test requirements in this specification, (2) the seller may use his own or other suitable facilities for the performance of the inspection and testing, and (3) the purchaser shall have the right to perform any of the inspection and tests set forth in this specification. The manufacturer shall afford the purchaser's inspector all reasonable facilities necessary to satisfy him that the material is being furnished in accordance with the specification. Inspection by the purchaser shall not interfere unnecessarily with the manufacturer.

19. Rejection

19.1 Material that shows injurious imperfections per alloy specification subsequent to its acceptance at the purchaser's works will be rejected and the seller shall be notified.

20. Rehearing

20.1 Samples tested in accordance with the specification that represent rejected material shall be retained for a period agreed upon by purchaser and seller from the date of the notification to the seller of the rejection. In case of dissatisfaction with the results of the test, the seller may make claim for a rehearing within that time.

21. Material Test Report and Certification

21.1 A report of the result of all tests required by the product specification shall be supplied. This material test report shall reference the product specification designation and year date indicating that the material was manufactured, sampled, tested, and inspected in accordance with requirements of the product specification and has been found to meet those requirements. The material test report shall report the melting process when the purchase order requires either a specific type of melting or requires that the melting process used is to be reported.

21.1.1 The report shall indicate the type of material. If certifying that the material conforms to the requirements for more than one type of material, the manufacturer may indicate each type of material on the report, or may issue a separate report for each type of material.

21.1.2 When weld repair is performed, it shall be so stated on the test report, noting the alloy type of weld consumable used.

21.2 A signature is not required on the report. However, the document shall clearly identify the organization submitting the report.

21.3 A material test report, certificate of inspection, or similar document printed from or used in electronic form from an electronic data interchange (EDI) transmission shall be regarded as having the same validity as a counterpart printed in the certifier's facility. The content of the EDI transmitted document must meet the requirements of the invoked ASTM standard(s) and conform to any existing EDI agreement between the purchaser and the supplier. Notwithstanding the absence of a signature,

the organization submitting the EDI transmission is responsible for the content of the report.

21.4 When finished material is supplied to a purchase order specifying the product specification, the organization supplying that material shall provide the purchaser with a copy of the original manufacturer's test report.

NOTE 2 — Notwithstanding the absence of a signature, the organization submitting the report is responsible for the content of the report.

NOTE 3 — The industry definition as invoked here is: EDI is the computer-to-computer exchange of business information in a standard format such as ANSI ASC X12.

22. Packaging, Marking, and Loading

22.1 *For Commercial Procurement:*

22.1.1 *Marking*— Unless otherwise specified in the applicable material specification or the purchase order, marking shall be conducted as follows:

22.1.1.1 Sheet, strip, and plate shall be marked on one face, in the location indicated below with the specification designation number, type of material, material identification number, and the name or mark of the manufacturer. The characters shall be of such size as to be clearly legible. The marking shall be sufficiently stable to withstand normal handling. Unless otherwise specified by the purchaser, the marking, at the producers option, may be done with (a) marking fluid (if a specific maximum impurity limit of designation elements in the marking fluid is required by the purchaser, it shall be so stated on the purchase order), (b) low-stress blunt-nosed continuous or low-stress blunt-nosed-interrupted-dot die stamp, (c) a vibratory tool with a minimum tip radius of 0.005 in. (0.1 mm), or (d) electrochemical etching.

22.1.1.2 Flat sheet, strip in cut lengths, and plate shall be marked in two places near the ends or may be continuously line marked. Cut pieces from sheet, strip and plate, with both width and length, or diameter dimensions less than 48 in., may be marked in only one place.

22.1.1.3 Sheet, strip, and plate in coil form shall be marked near the outside end of the coil. The inside of the coil shall also be marked or shall have a tag or label attached and marked with the information of 22.1.1.1.

22.1.1.4 Material less than $\frac{1}{4}$ in.(6.4 mm) in thickness shall not be marked with die stamps.

22.1.1.5 Material that conforms completely with the requirements of two types of material within the ordering specification may be marked as both types of material provided that the manufacturer is certifying the material as meeting the requirements of each of the types of material. Such marking, if used may be part of the same marking as used for a single type of material, or may be a separate but similar marking immediately adjacent to the marking used for a single type of material.

22.1.1.6 The AIAG primary metals identification tag (AIAG B-5) may be used as a auxiliary method of identification in cases where a bar-coded identification tag is desired. Use of this method shall be by agreement between purchaser and supplier.

23. Keywords

23.1 nickel alloy; plate; sheet; strip

ANNEXES

(Mandatory Information)

A1. PERMISSIBLE VARIATIONS IN DIMENSIONS, ETC. — INCH-POUND (SI) UNITS

A1.1 Listed in Annex A1 are tables showing the permissible variations in dimensions expressed in inch-pound (SI) units of measurement applicable to material produced to specifications SB-463, SB-536, SB-599, SB-625, SB-688, SB-709, and SB-718, unless modified in accordance with Section 1.2 of this specification.

TABLE A1.1
PERMISSIBLE VARIATIONS IN THICKNESS FOR HOT-ROLLED SHEETS IN CUT LENGTHS, COLD-ROLLED SHEET IN CUT LENGTHS AND COILS

Specified Thickness,[A] in. [mm]	Permissible Variations, Over and Under[B] in.	mm
Over 0.145 [3.68] to less than 3/16 [4.76]	0.014	0.36
Over 0.130 [3.30] to 0.145 [3.68], incl	0.012	0.30
Over 0.114 [2.90] to 0.130 [3.30], incl	0.010	0.25
Over 0.098 [2.49] to 0.114 [2.90], incl	0.009	0.23
Over 0.083 [2.11] to 0.098 [2.49], incl	0.008	0.20
Over 0.072 [1.83] to 0.083 [2.11], incl	0.007	0.18
Over 0.058 [1.47] to 0.072 [1.83], incl	0.006	0.15
Over 0.040 [1.02] to 0.058 [1.47], incl	0.005	0.13
Over 0.026 [0.66] to 0.040 [1.02], incl	0.004	0.10
Over 0.016 [0.41] to 0.026 [0.66], incl	0.003	0.08
Over 0.007 [0.18] to 0.016 [0.41], incl	0.002	0.05
Over 0.005 [0.13] to 0.007 [0.18], incl	0.0015	0.04
0.005 [0.13]	0.001	0.03

[A] Thickness measurements are taken at least 3/8 in. [9.52 mm] from the edge of the sheet.

[B] Cold-rolled sheets in cut lengths and coils are produced in some type numbers and some widths and thickness to tolerances less than those shown in the table.

TABLE A1.2
PERMISSIBLE VARIATIONS IN WIDTH AND LENGTH FOR HOT-ROLLED AND COLD-ROLLED RESQUARED SHEETS (STRETCHER LEVELED STANDARD OF FLATNESS)

Specified Dimensions, in. [mm]	Tolerances Over in.	mm	Under
For thicknesses under 0.131 [3.33]:			
Widths up to 48 [1219] excl	1/16	1.59	0
Widths 48 [1219] and over	1/8	3.18	0
Lengths up to 120 [3048] excl	1/16	1.59	0
Lengths 120 [3048] and over	1/8	3.18	0
For thicknesses 0.131 [3.33] and over:			
All widths and lengths	1/4	6.35	0

NOTE 1 — Polished sheets with Finishes No. 4 and higher are produced to tolerances given in this table.

TABLE A1.3
PERMISSIBLE VARIATIONS IN WIDTH FOR HOT-ROLLED AND COLD-ROLLED SHEETS NOT RESQUARED AND COLD-ROLLED COILS

	Tolerances for Specified Width, in. [mm]	
Specified Thickness, in. [mm]	24 [610] to 48 [1219], excl	48 [1219] and Over
Less than 3/16 [4.76]	1/16 [1.59] over, 0 under	1/8 [3.18] over, 0 under

TABLE A1.4
PERMISSIBLE VARIATIONS IN LENGTH FOR HOT-ROLLED AND COLD-ROLLED SHEETS NOT RESQUARED

Length, ft [mm]	Tolerances, in. [mm]
Up to 10 [3048], incl	1/4 [6.35] over, 0
Over 10 [3048] to 20 [6096], incl	1/2 [12.70] over, 0 under

TABLE A1.5
PERMISSIBLE VARIATIONS IN CAMBER FOR HOT-ROLLED AND COLD-ROLLED SHEETS NOT RESQUARED AND COLD-ROLLED COILS[A]

Specified Width, in. [mm]	Tolerance per Unit Length of Any 8 ft [2438 mm], in. [mm]
24 [610] to 36 [914], incl	1/8 [3.18]
Over 36 [914]	3/32 [2.38]

[A] Camber is the greatest deviation of a side edge from a straight line and measurement is taken by placing an 8-ft [2438-mm] straightedge on the concave side and measuring the greatest distance between the sheet edge and the straightedge.

TABLE A1.6
PERMISSIBLE VARIATIONS IN FLATNESS FOR HOT-ROLLED AND COLD-ROLLED SHEETS SPECIFIED TO STRETCHER-LEVELED STANDARD OF FLATNESS (NOT INCLUDING HARD TEMPERS OF 2XX AND 3XX SERIES)

Specified Thickness, in. [mm]	Width, in. [mm]	Length, in. [mm]	Flatness Tolerance,[A] in. [mm]
Under 3/16 [4.76]	to 48 [1219], incl	to 96 [2438], incl	1/8 [3.18]
Under 3/16 [4.76]	to 48 [1219], incl	over 96 [2438]	1/4 [6.35]
Under 3/16 [4.76]	over 48 [1219]	to 96 [2438], incl	1/4 [6.35]
Under 3/16 [4.76]	over 48 [1219]	over 96 [2438]	1/4 [6.35]

[A] Maximum deviation from a horizontal flat surface.

TABLE A1.7
PERMISSIBLE VARIATIONS IN DIAMETER FOR HOT-ROLLED AND COLD-ROLLED SHEETS, SHEARED CIRCLES

Specified Thickness, in. [mm]	Tolerance Over Specified Diameter (No Tolerance Under), in. [mm]		
	Diameters Under 30 in. [762]	Diameters 30 [762] to 48 in. [1219]	Diameters Over 48 in. [1219]
0.0972 [2.46] and thicker	1/8 [3.18]	3/16 [4.76]	1/4 [6.35]
0.0971 [2.46] to 0.0568 [1.45], incl	3/32 [2.38]	5/32 [3.97]	7/32 [5.56]
0.0567 [1.45] and thinner	1/16 [1.59]	1/8 [3.18]	3/16 [4.76]

TABLE A1.8
PERMISSIBLE VARIATIONS IN THICKNESS FOR COLD-ROLLED STRIPS IN COILS AND CUT LENGTHS

Specified Thickness, in. [mm]	Thickness Tolerances, for the Thickness and Widths Given, Over and Under, in. [mm]		
	Width, in. [mm]		
	3/16 [4.76] to 6 [152], incl	Over 6 [152] to 12 [305], incl	Over 12 [305] to 24 [610], excl
	Thickness Tolerances[A]		
0.005 [0.13] to 0.010 [0.25], incl	10%	10%	10%
Over 0.010 [0.25] to 0.011 [0.28], incl	0.0015 [0.04]	0.0015 [0.04]	0.0015 [0.04]
Over 0.011 [0.28] to 0.013 [0.33], incl	0.0015 [0.04]	0.0015 [0.04]	0.002 [0.05]
Over 0.013 [0.33] to 0.017 [0.43], incl	0.0015 [0.04]	0.002 [0.05]	0.002 [0.05]
Over 0.017 [0.43] to 0.020 [0.51], incl	0.0015 [0.04]	0.002 [0.05]	0.0025 [0.06]
Over 0.020 [0.51] to 0.029 [0.74], incl	0.002 [0.05]	0.0025 [0.06]	0.0025 [0.06]
Over 0.029 [0.74] to 0.035 [0.89], incl	0.002 [0.05]	0.003 [0.08]	0.003 [0.08]
Over 0.035 [0.89] to 0.050 [1.27], incl	0.0025 [0.06]	0.0035 [0.09]	0.0035 [0.09]
Over 0.050 [1.27] to 0.069 [1.75], incl	0.003 [0.08]	0.0035 [0.09]	0.0035 [0.09]
Over 0.069 [1.75] to 0.100 [2.54], incl	0.003 [0.08]	0.004 [0.10]	0.005 [0.13]
Over 0.100 [2.54] to 0.125 [2.98], incl	0.004 [0.10]	0.0045 [0.11]	0.005 [0.13]
Over 0.125 [2.98] to 0.161 [4.09], incl	0.0045 [0.11]	0.0045 [0.11]	0.005 [0.13]
Over 0.161 [4.09] to under 3/16 [4.76]	0.005 [0.13]	0.005 [0.13]	0.006 [0.15]

NOTE 1 — Thickness measurements are taken at least 3/8 in. [9.52 mm] in from the edge of the strip, except on widths less than 1 in. [25.4 mm] the measurements should be taken at least 1/8 in. [3.18 mm] from the strip edge.

NOTE 2 — The tolerance in this table include crown tolerances.

[A] Thickness tolerances given in in. [mm] unless otherwise indicated.

TABLE A1.9
PERMISSIBLE VARIATIONS IN WIDTH FOR COLD-ROLLED STRIP IN COILS AND CUT LENGTHS FOR EDGE NOS. 1 AND 5

Specified Edge No.	Width, in. [mm]	Thickness, in. [mm]	Width Tolerance for Thickness and Width Given, in. [mm] Over	Under
1 and 5	9/32 [7.14] and under	1/16 [1.59] and under	0.005 [0.13]	0.005 [0.13]
1 and 5	over 9/32 [7.14] to 3/4 [19.05], incl	3/32 [2.38] and under	0.005 [0.13]	0.005 [0.13]
1 and 5	over 3/4 [19.05] to 5 [127], incl	1/8 [3.18] and under	0.005 [0.13]	0.005 [0.13]
5	over 5 [127.00] to 9 [228.60], incl	1/8 [3.18] to 0.008 [0.20], incl	0.010 [0.25]	0.010 [0.25]
5	over 9 [228.60] to 20 [508.00], incl	0.105 [2.67] to 0.015 [0.38]	0.010 [0.25]	0.010 [0.25]
5	over 20 [508.00]	0.080 [2.03] to 0.023 [0.58]	0.015 [0.38]	0.015 [0.38]

TABLE A1.10
PERMISSIBLE VARIATIONS IN WIDTH FOR COLD-ROLLED STRIP IN COILS AND CUT LENGTHS FOR EDGE NO. 3

Specified Thickness, in. [mm]	Width Tolerance, Over and Under, for Thickness and Width Given, in. [mm] Under 1/2 [12.70] to 3/16 [4.76], incl	1/2 [12.70] to 6 [152.40], incl	Over 6 [152.40] to 9 [228.60], incl	Over 9 [228.60] to 12 [304.80], incl	Over 12 [304.80] to 20 [508.00], incl	Over 20 [508.00] to 24 [609.60], incl
Under 3/16 [4.76] to 0.161 [4.09], incl	...	0.016 [0.41]	0.020 [0.51]	0.020 [0.51]	0.031 [0.79]	0.031 [0.79]
0.160 [4.06] to 0.100 [2.54], incl	0.010 [0.25]	0.010 [0.25]	0.016 [0.41]	0.016 [0.41]	0.020 [0.51]	0.020 [0.51]
0.099 [2.51] to 0.069 [1.75], incl	0.008 [0.20]	0.008 [0.20]	0.010 [0.25]	0.010 [0.25]	0.016 [0.41]	0.020 [0.51]
0.068 [1.73] and under	0.005 [0.13]	0.005 [0.13]	0.005 [0.13]	0.010 [0.25]	0.016 [0.41]	0.020 [0.51]

TABLE A1.11
PERMISSIBLE VARIATIONS IN CAMBER FOR COLD-ROLLED STRIP IN COILS AND CUT LENGTHS[A]

Specified Width, in. [mm]	Tolerance per Unit Length of Any 8 ft [2438 mm], in. [mm]
To 1 1/2 [38.10], incl	1/2 [12.70]
Over 1 1/2 [38.10] to 24 [609.60], excl	1/4 [6.35]

[A] Camber is the deviation of a side edge from a straight line and measurement is taken by placing an 8-ft [2438-mm] straightedge on the concave side and measuring the greatest distance between the strip edge and the straightedge.

TABLE A1.12
PERMISSIBLE VARIATIONS IN THICKNESS FOR PLATES[A, B]

	Width, in. [mm]			
Specified Thickness, in. [mm]	To 84 [2134], incl	Over 84 [2134] to 120 [3048], incl	Over 120 [3048] to 144 [3658], incl	Over 144 [3658]
	Tolerance Over Specified Thickness,[C] in. [mm]			
3/16 [4.76] to 3/8 [9.52], excl	0.045 [1.14]	0.050 [1.27]	...	...
3/8 [9.52] to 3/4 [19.05], excl	0.055 [1.40]	0.060 [1.52]	0.075 [1.90]	0.090 [2.29]
3/4 [19.05] to 1 [25.40], excl	0.060 [1.52]	0.065 [1.65]	0.085 [2.16]	0.100 [2.54]
1 [25.40] to 2 [50.80], excl	0.070 [1.78]	0.075 [1.90]	0.095 [2.41]	0.115 [2.92]
2 [50.80] to 3 [76.20], excl	0.125 [3.18]	0.150 [3.81]	0.175 [4.44]	0.200 [5.08]
3 [76.20] to 4 [101.6], excl	0.175 [4.44]	0.210 [5.33]	0.245 [6.22]	0.280 [7.11]
4 [101.6] to 6 [152.4], excl	0.250 [6.35]	0.300 [7.62]	0.350 [8.89]	0.400 [10.16]
6 [152.4] to 8 [203.2], excl	0.350 [8.89]	0.420 [10.67]	0.490 [12.45]	0.560 [14.22]
8 [203.2] to 10 [254.0], excl	0.450 [11.43]	0.540 [13.72]	0.630 [16.00]	...

[A] Thickness is measured along the longitudinal edges of the plate at least 3/8 in. [9.52 mm], but not more than 3 in. [76.20 mm], from the edge.

[B] For plates up to 10 in. [254.0 mm], excl, in thickness, the tolerance under the specified thickness is 0.010 in. [0.25 mm].

[C] For circles, the over thickness tolerances in this table apply to the diameter of the circle corresponding to the width ranges shown. For plates of irregular shape, the over thickness tolerances apply to the greatest width corresponding to the width ranges shown.

TABLE A1.13
PERMISSIBLE VARIATIONS IN WIDTH AND LENGTH FOR RECTANGULAR SHEARED MILL PLATES AND UNIVERSAL MILL PLATES

		Tolerances Over Specified Width and Length for Given Width, Length, and Thickness,[A] in. [mm]					
		Under 3/8 in. [9.52 mm] in Thickness		3/8 [9.52] to 1/2 [12.70 mm] in., incl, in Thickness		Over 1/2 [12.70 mm] to 1 in. [25.40 mm] in Thickness	
Width, in. [mm]	Length, in. [mm]	Width	Length	Width	Length	Width	Length
48 [1219] and under	144 [3658] and under	1/8 [3.18]	3/16 [4.76]	3/16 [4.76]	1/4 [6.35]	5/16 [7.94]	3/8 [9.52]
Over 48 [1219] to 60 [1524], incl		3/16 [4.76]	1/4 [6.35]	1/4 [6.35]	5/16 [7.94]	3/8 [9.52]	7/16 [11.11]
Over 60 [1524] to 84 [2134], incl		1/4 [6.35]	5/16 [7.94]	5/16 [7.94]	3/8 [9.52]	7/16 [11.11]	1/2 [12.70]
Over 84 [2134] to 108 [2743], incl		5/16 [7.94]	3/8 [9.52]	3/8 [9.52]	7/16 [11.11]	1/2 [12.70]	9/16 [14.29]
Over 108 [2743]		3/8 [9.52]	7/16 [11.11]	7/16 [11.11]	1/2 [12.70]	5/8 [15.88]	11/16 [17.46]
48 [1219] and under	over 144 [3658] to 240 [6096]	3/16 [4.76]	3/8 [9.52]	1/4 [6.35]	1/2 [12.70]	5/16 [7.94]	5/8 [15.88]
Over 48 [1219] to 60 [1524], incl		1/4 [6.35]	7/16 [11.11]	5/16 [7.94]	5/8 [15.88]	3/8 [9.52]	3/4 [19.05]
Over 60 [1524] to 84 [2134], incl		3/8 [9.52]	1/2 [12.70]	7/16 [11.11]	11/16 [17.46]	1/2 [12.70]	3/4 [19.05]
Over 84 [2134] to 108 [2743], incl		7/16 [11.11]	9/16 [14.29]	1/2 [12.70]	3/4 [19.05]	5/8 [15.88]	7/8 [22.22]
Over 108 [2743]		1/2 [12.70]	5/8 [15.88]	5/8 [15.88]	7/8 [22.22]	11/16 [17.46]	1 [25.40]
48 [1219] and under	over 240 [6096] to 360 [9144]	1/4 [6.35]	1/2 [12.70]	5/16 [7.94]	5/8 [15.88]	3/8 [9.52]	3/4 [19.05]
Over 48 [1219] to 60 [1524], incl		5/16 [7.94]	5/8 [15.88]	3/8 [9.52]	3/4 [19.05]	1/2 [12.70]	3/4 [19.05]
Over 60 [1524] to 84 [2134], incl		7/16 [11.11]	11/16 [17.46]	1/2 [12.70]	3/4 [19.05]	5/8 [15.88]	7/8 [22.22]
Over 84 [2134] to 108 [2743], incl		9/16 [14.29]	3/4 [19.05]	5/8 [15.88]	7/8 [22.22]	3/4 [19.05]	1 [25.40]
Over 108 [2743]		5/8 [15.88]	7/8 [22.22]	11/16 [17.46]	1 [25.40]	7/8 [22.22]	1 [25.40]
60 [1524] and under	over 360 [9144] to 480 [12192]	7/16 [11.11]	1 1/8 [28.58]	1/2 [12.70]	1 1/4 [31.75]	5/8 [15.88]	1 3/8 [34.92]
Over 60 [1524] to 84 [2134], incl		1/2 [12.70]	1 1/4 [31.75]	5/8 [15.88]	1 3/8 [34.92]	3/4 [19.05]	1 1/2 [38.10]
Over 84 [2134] to 108 [2743], incl		9/16 [14.29]	1 1/4 [31.75]	3/4 [19.05]	1 3/8 [34.92]	7/8 [22.22]	1 1/2 [38.10]
Over 108 [2743]		3/4 [19.05]	1 3/8 [34.92]	7/8 [22.22]	1 1/2 [38.10]	1 [25.40]	1 5/8 [41.28]
60 [1524] and under	over 480 [12192] to 600 [15240]	7/16 [11.11]	1 1/4 [31.75]	1/2 [12.70]	1 1/2 [38.10]	5/8 [15.88]	1 5/8 [41.28]
Over 60 [1524] to 84 [2134], incl		1/2 [12.70]	1 3/8 [34.92]	5/8 [15.88]	1 1/2 [38.10]	3/4 [19.05]	1 5/8 [41.28]
Over 84 [2134] to 108 [2743], incl		5/8 [15.88]	1 3/8 [34.92]	3/4 [19.05]	1 1/2 [38.10]	7/8 [22.22]	1 5/8 [41.28]
Over 108 [2743]		3/4 [19.05]	1 1/2 [38.10]	7/8 [22.22]	1 5/8 [41.28]	1 [25.40]	1 3/4 [44.45]
60 [1524] and under	over 600 [15240]	1/2 [12.70]	1 3/4 [44.45]	5/8 [15.88]	1 7/8 [47.62]	3/4 [19.05]	1 7/8 [47.62]
Over 60 [1524] to 84 [2134], incl		5/8 [15.88]	1 3/4 [44.45]	3/4 [19.05]	1 7/8 [47.62]	7/8 [22.22]	1 7/8 [47.62]
Over 84 [2134] to 108 [2743], incl		5/8 [15.88]	1 3/4 [44.45]	3/4 [19.05]	1 7/8 [47.62]	7/8 [22.22]	1 7/8 [47.62]
Over 108 [2743]		7/8 [22.22]	1 3/4 [44.45]	1 [25.40]	2 [50.80]	1 1/8 [28.58]	2 1/4 [57.15]

[A] The tolerance under specified width and length is 1/4 in. [6.35 mm].

TABLE A1.14
PERMISSIBLE VARIATIONS IN FLATNESS FOR ANNEALED PLATES

	Flatness Tolerance (Deviation from a Horizontal Flat Surface) for Thicknesses and Widths Given, in. [mm]								
	Width, in. [mm]								
Specified Thickness, in. [mm]	48 [1219] or Under	Over 48 [1219] to 60 [1524], excl	60 [1524] to 72 [1829], excl	72 [1829] to 84 [2134], excl	84 [2134] to 96 [2438], excl	96 [2438] to 108 [2743], excl	108 [2743] to 120 [3048], excl	120 [3048] to 144 [3658], excl	144 [3658] and Over
3/16 [4.76] to 1/4 [6.35], excl	3/4 [19.05]	1 1/16 [26.99]	1 1/4 [31.75]	1 3/8 [34.92]	1 5/8 [41.28]	1 5/8 [41.28]	1 7/8 [47.62]	2 [50.80]	. . .
1/4 [6.35] to 3/8 [9.52], excl	11/16 [17.46]	3/4 [19.05]	15/16 [23.81]	1 1/8 [28.58]	1 3/8 [34.92]	1 7/16 [36.51]	1 9/16 [39.69]	1 7/8 [47.62]	. . .
3/8 [9.52] to 1/2 [12.70], excl	1/2 [12.70]	9/16 [14.29]	11/16 [17.46]	3/4 [19.05]	15/16 [23.81]	1 1/8 [28.58]	1 1/4 [31.75]	1 7/16 [36.51]	1 3/4 [44.45]
1/2 [12.70] to 3/4 [19.05], excl	1/2 [12.70]	9/16 [14.29]	5/8 [15.88]	5/8 [15.88]	13/16 [20.64]	1 1/8 [28.58]	1 1/8 [28.58]	1 1/8 [28.58]	1 3/8 [34.92]
3/4 [19.05] to 1 [25.40], excl	1/2 [12.70]	9/16 [14.29]	5/8 [15.88]	5/8 [15.88]	3/4 [19.05]	13/16 [20.64]	15/16 [23.81]	1 [25.40]	1 1/8 [28.58]
1 [25.40] to 1 1/2 [38.10], excl	1/2 [12.70]	9/16 [14.29]	9/16 [14.29]	9/16 [14.29]	11/16 [17.46]	11/16 [17.46]	11/16 [17.46]	3/4 [19.05]	1 [25.40]
1 1/2 [38.10] to 4 [101.60], excl	5/16 [7.94]	3/8 [9.52]	7/16 [11.11]	1/2 [12.70]	5/8 [15.88]	3/4 [19.05]	7/8 [22.22]	1 [25.40]	1 [25.40]
4 [101.60] to 6 [152.40], excl	3/8 [9.52]	7/16 [11.11]	9/16 [14.29]	5/8 [15.88]	3/4 [19.05]	15/16 [23.81]	1 1/8 [28.58]	1 1/4 [31.75]	1 1/4 [31.75]

NOTE 1 — Tolerances in this table apply to plates up to 15 ft [4572 mm] in length, or to any 15 ft [4572 mm] of longer plates.

NOTE 2 — If the longer dimension is under 36 in. [914 mm], the tolerance is not greater than 1/4 in. [6.35 mm].

NOTE 3 — For plates with specified minimum yield strengths of 35 ksi [240 MPa] or more, and all steels of Specification A 693, the permissible variations are increased to 1 1/2 times the amounts shown below.

TABLE A1.15
PERMISSIBLE VARIATIONS IN CAMBER FOR SHEARED MILL AND UNIVERSAL MILL PLATES[A]

Maximum camber = 1/8 in. in any 5 ft = 3.18 mm in any 1.524 m

[A] Camber is the deviation of a side edge from a straight line, and measurement is taken by placing a 5-ft straightedge on the concave side and measuring the greatest distance between the plate and the straightedge.

TABLE A1.16
PERMISSIBLE VARIATIONS IN DIAMETER FOR CIRCULAR PLATES

	Tolerance Over Specified Diameter for Given Diameter and Thickness,[A] in. [mm]		
Specified Diameter, in. [mm]	To 3/8 [9.52] in., excl in Thickness	3/8 [9.52] to 5/8 [15.88] in., excl in Thickness	5/8 in. [15.88] and Over in Thickness[B]
To 60 [1524], excl	1/4 [6.35]	3/8 [9.52]	1/2 [12.70]
60 [1524 mm] to 84 [2134 mm], excl	5/16 [7.94]	7/16 [11.11]	9/16 [14.29]
84 [2134 mm] to 108 [2743 mm], excl	3/8 [9.52]	1/2 [12.70]	5/8 [15.88]
108 [2743 mm] to 180 [4572 mm], excl	7/16 [11.11]	9/16 [14.29]	11/16 [17.46]

[A] No tolerance under.
[B] Circular and sketch plates over 5/8 in. [15.88 mm] in thickness are not commonly sheared but are machined or flame cut.

TABLE A1.17
TORCH CUTTING TOLERANCES[A] AND RECOMMENDED CLEANUP ALLOWANCE FOR RECTANGULAR PLATES, CIRCLES, RINGS, AND SKETCHES

	Tolerance, in.		
Specified Thickness, in.	Outside Dimension	Inside Dimension	Cleanup Allowance[B] per Edge, in.
2 and under	+3/8, −0	−3/8, +0	±1/4
Over 2 to 3 incl	+1/2, −0	−1/2, +0	±3/8
Over 3 to 6 incl	+3/4, −0	−3/4, +0	±1/2

[A] Tolerances to apply unless otherwise agreed. Note that for some applications user may wish to specify minus rather than plus tolerance or vice versa.
[B] Recommended cleanup allowance which, unless otherwise specified, will be applied by supplier to purchasers ordered size.

TABLE A1.18
PERMISSIBLE VARIATIONS IN ABRASIVE CUTTING WIDTH AND LENGTH FOR PLATES

Specified Thickness, in. [mm]	Tolerance over Specified Width and Length[A]	
	Width	Length
Up to 1 [25.40], incl	1/8 [3.18]	1/8 [3.18]
1[25.40] to 2 [50.80], incl	3/16 [4.76]	3/16 [4.76]
2 [50.80] to 3 [76.20], incl	1/4 [6.35]	1/4 [6.35]
3 [76.20] to 4 [101.6], incl[B]	5/16 [7.94]	5/16 [7.94]

[A] The tolerances under specified width and length are 1/8 in. [3.18 mm].
[B] Width and length tolerances for abrasive cut plates over 4 in. [101.6 mm] thick are not included in the table; consult producer.

A2. PERMISSIBLE VARIATIONS IN DIMENSIONS, ETC. — INCH-POUND (SI) UNITS

A2.1 Listed in Annex A1 are tables showing the permissible variations in dimensions expressed in inch-pound (SI) units of measurement applicable to material produced to specifications SB-333, SB-434, SB-435, SB-575, SB-582, SB-620, SB-814, or SB-818, unless modified in accordance with Section 1.2 of this specification.

TABLE A2.1
PERMISSIBLE VARIATIONS IN THICKNESS OF PLATE[A]

Specified Thickness, in. (mm)	Permissible Variations in Thickness, in. (mm)[B, C]	
	+	−
3/16 to 7/32 (4.762 to 5.556), incl	0.021 (0.53)	0.010 (0.25)
Over 7/32 to 1/4 (5.556 to 6.350), incl	0.024 (0.61)	0.010 (0.25)
Over 1/4 to 3/8 (6.350 to 9.525), incl	0.027 (0.69)	0.010 (0.25)
Over 3/8 to 1/2 (9.525 to 12.70), incl	0.030 (0.76)	0.010 (0.25)
Over 1/2 to 5/8 (12.70 to 5.88), incl	0.035 (0.89)	0.010 (0.25)
Over 5/8 to 3/4 (15.88 to 19.05), incl	0.040 (1.02)	0.010 (0.25)
Over 3/4 to 7/8 (19.05 to 22.25), incl	0.045 (1.14)	0.010 (0.25)
Over 7/8 to 1 (22.25 to 25.4), incl	0.050 (1.27)	0.010 (0.25)
Over 1 to 2 1/2 (25.4 to 63.5), incl	5[D]	0.010 (0.25)

[A] Applicable to plate 48 in. (1.22 m) and under in width.
[B] Measured 3/8 in. (9.525 mm) or more from any edge.
[C] Buffing or grinding for removal of light surface imperfections shall be permitted. The depth of such buffed or ground areas shall not exceed the minimum tolerance thickness.
[D] Expressed as percent of thickness.

TABLE A2.2
PERMISSIBLE VARIATIONS IN THICKNESS OF SHEET[A] AND STRIP

Specified Thickness, in. (mm)	Permissible Variations in Thickness, in.[B, C] (mm) (All Widths)	
	+	−
0.020 to 0.034 (0.51 to 0.86), incl	0.004 (0.10)	0.004 (0.10)
Over 0.034 to 0.056 (0.86 to 1.42), incl	0.005 (0.13)	0.005 (0.13)
Over 0.056 to 0.070 (1.42 to 1.78), incl	0.006 (0.15)	0.006 (0.15)
Over 0.070 to 0.078 (1.78 to 1.98), incl	0.007 (0.18)	0.007 (0.18)
Over 0.078 to 0.093 (1.98 to 2.36), incl	0.008 (0.20)	0.008 (0.20)
Over 0.093 to 0.109 (2.36 to 2.77), incl	0.009 (0.23)	0.009 (0.23)
Over 0.109 to 0.125 (2.77 to 3.18), incl	0.010 (0.25)	0.010 (0.25)
Over 0.125 to 0.140 (3.18 to 3.56), incl	0.013 (0.33)	0.010 (0.25)
Over 0.140 to 0.171 (3.56 to 4.34), incl	0.016 (0.41)	0.010 (0.25)
Over 0.171 to 0.187 (4.34 to 4.75), incl	0.018 (0.46)	0.010 (0.25)

[A] Applicable to sheet 48 in. (1.22 m) and under in width.
[B] Measured 3/8 in. (9.525 mm) or more from any edge.
[C] Buffing for removal of light surface imperfections shall be permitted. The depth of such buffed areas shall not exceed the permissible minus variation.

TABLE A2.3
PERMISSIBLE VARIATIONS IN WIDTH AND LENGTH OF SHEARED, TORCH-CUT, OR ABRASIVE-CUT RECTANGULAR PLATE

	Permissible Variations in Widths and Lengths For Dimensions Given, in. (mm)			
	Up to 30 (760), incl		Over 30 (760)	
Specified Thickness	+	−	+	−
Inches				
Sheared:				
3/16 to 5/16, excl	3/16	1/8	1/4	1/8
5/16 to 1/2, incl	1/4	1/8	3/8	1/8
Abrasive-cut:				
3/16 to 1 1/2, incl	1/16	1/16	1/16	1/16
Over 1 1/2 to 2 1/2, incl	1/8	1/8	1/8	1/8
Torch-cut:[A]				
3/16 to 2 excl	1/2	0	1/2	0
2 to 3 incl	5/8	0	5/8	0
Millimeters				
Sheared:				
4.76 to 7.94, excl	4.76	3.18	6.35	3.18
7.94 to 12.70, incl	6.35	3.18	9.52	3.18
Abrasive-cut:				
4.76 to 38.1, incl	1.59	1.59	1.59	1.59
Over 38.1 to 63.5, incl	3.18	3.18	3.18	3.18
Torch-cut:[A]				
4.8 to 50.8 excl	12.7	0	12.7	0
50.8 to 76.2 incl	15.9	0	15.9	0

[A] The tolerance spread shown for torch-cutting may be obtained all on the minus side, or divided between the plus and the minus side if so specified by the purchaser.

TABLE A2.4
PERMISSIBLE VARIATIONS IN WIDTH OF SHEET AND STRIP

Specified Thickness, in. (mm)	Specified Width, in. (mm)	Permissible Variations in Specified Width, in. (mm)	
		+	−
	Sheet		
0.187 (4.76) and under	2 (50.8) and over	0.125 (3.18)	0
	Strip (Slit Edges)		
Over 0.020 to 0.075 (0.51 to 1.90), incl	24 (610) and under	0.007 (0.18)	0.007 (0.18)
Over 0.075 to 0.100 (1.90 to 2.54), incl	24 (610) and under	0.009 (0.23)	0.009 (0.23)
Over 0.100 to 0.125 (2.54 to 3.18), incl	24 (610) and under	0.012 (0.30)	0.012 (0.30)

A3. PERMISSIBLE VARIATIONS IN DIMENSIONS, ETC. — INCH-POUND (SI) UNITS

A3.1 Listed in Annex A1 are tables showing the permissible variations in dimensions expressed in inch-pound (SI) units of measurement applicable to material produced to specifications SB-127, SB-162, SB-168, SB-409, SB-424, SB-443, SB-670, SB-755, or SB-872, unless modified in accordance with Section 1.2 of this specification.

TABLE A3.1
PERMISSIBLE VARIATIONS IN THICKNESS AND OVERWEIGHT OF RECTANGULAR PLATES

Specified Thickness, in. (mm)	Permissible Excess in Average Weight[B, C] per Square Foot of Plates for Widths Given in Inches (Millimeters) Expressed in Percent of Nominal Weights									
	Under 48 (1220)	48 to 60 (1220 to 1520), excl	60 to 72 (1520 to 1830), excl	72 to 84 (1830 to 2130), excl	84 to 96 (2130 to 2440), excl	96 to 108 (2440 to 2740), excl	108 to 120 (2740 to 3050), excl	120 to 132 (3050 to 3350), excl	132 to 144 (3350 to 3660), excl	144 to 160 (3660 to 4070), excl
3/16 to 5/16 (4.8 to 7.9), excl	9.0	10.5	12.0	13.5	15.0	16.5	18.0	...	...	...
5/16 to 3/8 (7.9 to 9.5), excl	7.5	9.0	10.5	12.0	13.5	15.0	16.5	18.0	...	...
3/8 to 7/16 (9.5 to 11.1), excl	7.0	7.5	9.0	10.5	12.0	13.5	15.0	16.5	18.0	19.5
7/16 to 1/2 (11.1 to 12.7), excl	6.0	7.0	7.5	9.0	10.5	12.0	13.5	15.0	16.5	18.0
1/2 to 5/8 (12.7 to 15.9), excl	5.0	6.0	7.0	7.5	9.0	10.5	12.0	13.5	15.0	16.5
5/8 to 3/4 (15.9 to 19.1), excl	4.5	5.5	6.0	7.0	7.5	9.0	10.5	12.0	13.5	15.0
3/4 to 1 (19.1 to 25.4), excl	4.0	4.5	5.5	6.0	7.0	7.5	9.0	10.5	12.0	13.5
1 to 2 (25.4 to 50.8), incl	4.0	4.0	4.5	5.5	6.0	7.0	7.5	9.0	10.5	12.0

NOTE 1 — All plates shall be ordered to thickness and not to weight per square foot. No plates shall vary more than 0.01 in. (0.3 mm) under the thickness ordered, and the overweight of each lot A in each shipment shall not exceed the amount given in the table. Spot grinding is permitted to remove surface imperfections, such spots not to exceed 0.01 in. (0.3 mm) under the specified thickness.

[A] The term "lot" applied to this table means all of the plates of each group width and each group thickness.

[B] The permissible overweight for lots of circular and sketch plates shall be 25% greater than the amounts given in this table.

[C] The weight of individual plates shall not exceed the nominal weight by more than 1¼ times the amount given in the table and Footnote B.

TABLE A3.2
PERMISSIBLE VARIATION IN THICKNESS FOR RECTANGULAR PLATES OVER 2 in. (51 mm) IN THICKNESS

Specified Thickness, in. (mm)	Permissible Variations, in. (mm), over Specified Thickness for Widths Given, in. (mm)					
	To 36 (915), excl	36 to 60 (915 to 1520), excl	60 to 84 (1520 to 2130), excl	84 to 120 (2130 to 3050), excl	120 to 132 (3050 to 3350), excl	132 (3350 and over)
Over 2 to 3 (51 to 76.0), incl	1/16 (1.6)	3/32 (2.4)	7/64 (2.8)	1/8 (3.2)	1/8 (3.2)	9/64 (3.6)
3 to 4 (76.0 to 102.0), incl	5/64 (2.0)	3/32 (2.4)	7/64 (2.8)	1/8 (3.2)	1/8 (3.2)	9/64 (3.6)

NOTE 1 — Permissible variation under specified thickness, 0.01 in. (0.3 mm).

TABLE A3.3
PERMISSIBLE VARIATIONS IN THICKNESS OF SHEET AND STRIP
[Permissible Variations, Plus and Minus, in Thickness, in. (mm), for Widths Given in in. (mm)]

Specified Thickness, in. (mm), incl	Sheet [A]			
	Hot-Rolled		Cold-Rolled	
	48 (1220) and Under	Over 48 to 60 (1220 to 1520), incl	48 (1220) and Under	Over 48 to 60 (1220 to 1520), incl
0.018 to 0.025 (0.5 to 0.6)	0.003 (0.08)	0.004 (0.10)	0.002 (0.05)	0.003 (0.08)
Over 0.025 to 0.034 (0.6 to 0.9)	0.004 (0.10)	0.005 (0.13)	0.003 (0.08)	0.004 (0.10)
Over 0.034 to 0.043 (0.9 to 1.1)	0.005 (0.13)	0.006 (0.15)	0.004 (0.10)	0.005 (0.13)
Over 0.043 to 0.056 (1.1 to 1.4)	0.005 (0.13)	0.006 (0.15)	0.004 (0.10)	0.005 (0.13)
Over 0.056 to 0.070 (1.4 to 1.8)	0.006 (0.15)	0.007 (0.18)	0.005 (0.13)	0.006 (0.15)
Over 0.070 to 0.078 (1.8 to 1.9)	0.007 (0.18)	0.008 (0.20)	0.006 (0.15)	0.007 (0.18)
Over 0.078 to 0.093 (1.9 to 2.4)	0.008 (0.20)	0.009 (0.23)	0.007 (0.18)	0.008 (0.20)
Over 0.093 to 0.109 (2.4 to 2.8)	0.009 (0.23)	0.010 (0.25)	0.007 (0.18)	0.009 (0.23)
Over 0.109 to 0.125 (2.8 to 3.2)	0.010 (0.25)	0.012 (0.31)	0.008 (0.20)	0.010 (0.25)
Over 0.125 to 0.140 (3.2 to 3.6)	0.012 (0.31)	0.014 (0.36)	0.008 (0.20)	0.010 (0.25)
Over 0.140 to 0.171 (3.6 to 4.3)	0.014 (0.36)	0.016 (0.41)	0.009 (0.23)	0.012 (0.31)
Over 0.171 to 0.187 (4.3 to 4.8)	0.015 (0.38)	0.017 (0.43)	0.010 (0.25)	0.013 (0.33)
Over 0.187 to 0.218 (4.8 to 5.5)	0.017 (0.43)	0.019 (0.48)	0.011 (0.28)	0.015 (0.38)
Over 0.218 to 0.234 (5.5 to 5.9)	0.018 (0.46)	0.020 (0.51)	0.012 (0.31)	0.016 (0.41)
Over 0.234 to 0.250 (5.9 to 6.4)	0.020 (0.51)	0.022 (0.56)	0.013 (0.33)	0.018 (0.46)

Specified Thickness, in. (mm), incl	Cold-Rolled [A, B] Widths 12 in. (305 mm) and Under, Plus and Minus
Up to 0.050 (1.27), incl	0.0015 (0.038)
Over 0.050 to 0.093 (1.27 to 2.39)	0.0025 (0.063)
Over 0.093 to 0.125 (2.39 to 3.18)	0.004 (0.11)

[A] Measure 3/8 in. (9.5 mm) or more from either edge except for strip under 1 in. (25.4 mm) in width which is measured at any place.
[B] Standard sheet tolerances apply for thicknesses over 0.125 in. (3.2 mm) and for all thicknesses of strip over 12 in. (305 mm) wide.

TABLE A3.4
PERMISSIBLE VARIATIONS IN WIDTH[A] OF SHEARED, PLASMA TORCH-CUT, AND ABRASIVE-CUT, RECTANGULAR PLATES[B,C]

Specified Thickness	Permissible Variations in Widths for Widths Given, in. (mm)									
	Up to 30 (760), incl		Over 30 to 72 (760 to 1830), incl		Over 72 to 108 (1830 to 2740), incl		Over 108 to 144 (2740 to 3660), incl		Over 144 to 160 (3660 to 4070), incl	
	+	−	+	−	+	−	+	−	+	−
Inches										
Sheared:[D]										
3/16 to 5/16, excl	3/16	1/8	1/4	1/8	3/8	1/8	1/2	1/8	...	...
5/16 to 1/2, excl	1/4	1/8	3/8	1/8	3/8	1/8	1/2	1/8	5/8	1/8
1/2 to 3/4, excl	3/8	1/8	3/8	1/8	1/2	1/8	5/8	1/8	3/4	1/8
3/4 to 1, excl	1/2	1/8	1/2	1/8	5/8	1/8	3/4	1/8	7/8	1/8
1 to 1 1/4, incl	5/8	1/8	5/8	1/8	3/4	1/8	7/8	1/8	1	1/8
Abrasive-cut:[E,F]										
3/16 to 1 1/4, incl	1/8	1/8	1/8	1/8	1/8	1/8	1/8	1/8	1/8	1/8
Over 1 1/4 to 2 3/4, incl	3/16	1/8	3/16	1/8	3/16	1/8	3/16	1/8	3/16	1/8
Plasma torch-cut:[G]										
3/16 to 2, excl	1/2	0	1/2	0	1/2	0	1/2	0	1/2	0
2 to 2 3/4, incl	5/8	0	5/8	0	5/8	0	5/8	0	5/8	0
Millimeters										
Sheared:[D]										
4.8 to 7.9, excl	4.8	3.2	6.4	3.2	9.5	3.2	12.7	3.2	...	...
7.9 to 12.7, excl	6.4	3.2	9.5	3.2	9.5	3.2	12.7	3.2	15.9	3.2
12.7 to 19.1, excl	9.5	3.2	9.5	3.2	12.7	3.2	15.9	3.2	19.1	3.2
19.1 to 25.4, excl	12.7	3.2	12.7	3.2	15.8	3.2	19.1	3.2	22.2	3.2
25.4 to 31.8, incl	15.9	3.2	15.9	3.2	19.1	3.2	22.2	3.2	25.4	3.2
Abrasive-cut:[E,F]										
4.8 to 31.8, incl	3.2	3.2	3.2	3.2	3.2	3.2	3.2	3.2	3.2	3.2
Over 31.8 to 69.8, incl	4.8	3.2	4.8	3.2	4.8	3.2	4.8	3.2	4.8	3.2
Plasma torch-cut:[G]										
4.8 to 50.8, excl	12.7	0	12.7	0	12.7	0	12.7	0	12.7	0
50.8 to 69.8, incl	15.9	0	15.9	0	15.9	0	15.9	0	15.9	0

[A] Permissible variations in width for powder- or inert arc-cut plate shall be as agreed upon between the manufacturer and the purchaser.

[B] Permissible variations in machined, powder-, or inert arc-cut circular plate shall be as agreed upon between the manufacturer and the purchaser.

[C] Permissible variations in plasma torch-cut sketch plates shall be as agreed upon between the manufacturer and the purchaser.

[D] The minimum sheared width is 24 in. (610 mm).

[E] The minimum abrasive-cut width is 2 in. (50.8 mm) and increases to 4 in. (101.6 mm) for thicker plates.

[F] These tolerances are applicable to lengths of 240 in. (6100 mm), max. For lengths over 240 in., an additional 1/16 in. (1.6 mm) is permitted, both plus and minus.

[G] The tolerance spread shown for plasma torch cutting may be obtained all on the minus side, or divided between the plus and minus side if so specified by the purchaser.

TABLE A3.5
PERMISSIBLE VARIATIONS IN DIAMETER FOR CIRCULAR PLATES

Specified Diameter, in. (mm)	Permissible Variations Over Specified Diameter for Thickness Given, in. (mm)[A] To 3/8 (9.5), incl
20 to 32 (508 to 813), excl	1/4 (6.4)
32 to 84 (813 to 2130), excl	5/16 (7.9)
84 to 108 (2130 to 2740), excl	3/8 (9.5)
108 to 140 (2740 to 3580), incl	7/16 (11.1)

Plasma Torch-Cut Plate[B]

Specified Diameter, in. (mm)	Thickness max, in. (mm)	Permissible Variations in Specified Diameter for Thickness Given, in. (mm)[C] 3/16 to 2 (4.8 to 50.8), excl Plus	3/16 to 2 (4.8 to 50.8), excl Minus	2 to 2 3/4 (50.8 to 69.8), incl Plus	2 to 2 3/4 (50.8 to 69.8), incl Minus
19 to 20 (483 to 508), excl	2 3/4 (69.8)	1/2 (12.7)	0	5/8 (15.9)	0
20 to 22 (508 to 559), excl	2 3/4 (69.8)	1/2 (12.7)	0	5/8 (15.9)	0
22 to 24 (559 to 610), excl	2 1/2 (63.5)	1/2 (12.7)	0	5/8 (15.9)	0
24 to 28 (610 to 711), excl	2 1/4 (57.3)	1/2 (12.7)	0	5/8 (15.9)	0
28 to 32 (711 to 812), excl	2 (50.8)	1/2 (12.7)	0	5/8 (15.9)	0
32 to 34 (812 to 864), excl	1 3/4 (44.5)	1/2 (12.7)	0	...	...
34 to 38 (864 to 965), excl	1 1/2 (38.1)	1/2 (12.7)	0	...	...
38 to 40 (965 to 1020), excl	1 1/4 (31.8)	1/2 (12.7)	0	...	...
40 to 140 (1020 to 3560), incl	2 3/4 (69.8)	1/2 (12.7)	0	5/8 (15.9)	0

[A] No permissible variations under.
[B] Permissible variations in plasma torch-cut sketch plates shall be as agreed upon between the manufacturer and the purchaser.
[C] The tolerance spread shown may also be obtained all on the minus side or divided between the plus and minus sides if so specified by the purchaser.

TABLE A3.6
PERMISSIBLE VARIATIONS IN WIDTH OF SHEET AND STRIP

Specified Thickness, in. (mm)	Specified Width, in. (mm)	Permissible Variations in Specified Width, in. (mm) Plus	Minus
	Sheet		
Up to 0.250 (6.35)	All	0.125 (3.18)	0
	Strip		
Under 0.075 (1.9)	Up to 12 (305), incl	0.007 (0.18)	0.007 (0.18)
	Over 12 to 48 (305 to 1219), incl	0.062 (1.6)	0
0.075 to 0.100 (1.9 to 2.5), incl	Up to 12 (305), incl	0.009 (0.23)	0.009 (0.23)
	Over 12 to 48 (305 to 1219), incl	0.062 (1.6)	0
Over 0.100 to 0.125 (2.5 to 3.2), incl	Up to 12 (305), incl	0.012 (0.30)	0.012 (0.30)
	Over 12 to 48 (305 to 1219), incl	0.062 (1.6)	0
Over 0.125 to 0.160 (3.2 to 4.1), incl	Up to 12 (305), incl	0.016 (0.41)	0.016 (0.41)
	Over 12 to 48 (305 to 1219), incl	0.062 (1.6)	0
Over 0.160 to 0.187 (4.1 to 4.7), incl	Up to 12 (305), incl	0.020 (0.51)	0.020 (0.51)
	Over 12 to 48 (305 to 1219), incl	0.062 (1.6)	0
Over 0.187 to 0.250 (4.7 to 6.4), incl	Up to 12 (305), incl	0.062 (1.6)	0.062 (1.6)
	Over 12 to 48 (305 to 1219), incl	0.062 (1.6)	0.062 (1.6)

TABLE A3.7
PERMISSIBLE VARIATIONS IN LENGTH[A] OF SHEARED, PLASMA TORCH-CUT,[B] AND ABRASIVE-CUT RECTANGULAR PLATE[C]

Specified Thickness	Permissible Variation in Length for Lengths Given, in. (mm)															
	Up to 60 (1520), incl		Over 60 to 96 (1520 to 2440), incl		Over 96 to 120 (2440 to 3050), incl		Over 120 to 240 (3050 to 6096), incl		Over 240 to 360 (6096 to 9144), incl		Over 360 to 450 (9144 to 11 430), incl		Over 450 to 540 (11 430 to 13 716), incl		Over 540 (13 716)	
	Plus	Minus	Plus	Minus	Plus	Minus	Plus	Minus	Plus	Minus	Plus	Minus	Plus	Minus	Plus	Minus
Inches																
Sheared:[D]																
3/16 to 5/16, excl	3/16	1/8	1/4	1/8	3/8	1/8	1/2	1/8	5/8	1/8	3/4	1/8	7/8	1/8	...	...
5/16 to 1/2, excl	3/8	1/8	1/2	1/8	1/2	1/8	1/2	1/8	5/8	1/8	3/4	1/8	7/8	1/8	1	1/8
1/2 to 3/4, excl	1/2	1/8	1/2	1/8	5/8	1/8	5/8	1/8	3/4	1/8	7/8	1/8	1 1/8	1/8	1 3/8	1/8
3/4 to 1, excl	5/8	1/8	5/8	1/8	5/8	1/8	3/4	1/8	7/8	1/8	1 1/8	1/8	1 3/8	1/8	1 5/8	1/8
1 to 1 1/4, incl	3/4	1/8	3/4	1/8	3/4	1/8	7/8	1/8	1 1/8	1/8	1 3/8	1/8	1 5/8	1/8	...	...
Abrasive-cut:[E]																
3/16 to 1 1/4, incl	1/8	1/8	1/8	1/8	1/8	1/8	1/8	1/8	1/8	1/8	1/8	1/8	...	...	...	...
Over 1 1/4 to 2 3/4, incl	3/16	1/8	3/16	1/8	3/16	1/8	3/16	1/8	3/16	1/8	3/16	1/8	...	...	...	...
Plasma torch-cut:[F]																
3/16 to 2, excl	1/2	0	1/2	0	1/2	0	1/2	0	1/2	0	1/2	0	1/2	0	1/2	0
2 to 2 3/4	5/8	0	5/8	0	5/8	0	5/8	0	5/8	0	5/8	0	5/8	0	5/8	0
Millimeters																
Sheared:[D]																
4.8 to 7.94, excl	4.8	3.2	6.4	3.2	9.5	3.2	12.7	3.2	15.9	3.2	19.0	3.2	22.2	3.2	...	...
7.94 to 12.7, excl	9.5	3.2	12.7	3.2	12.7	3.2	12.7	3.2	15.9	3.2	19.0	3.2	22.2	3.2	25.4	3.2
12.7 to 19.0, excl	12.7	3.2	12.7	3.2	15.9	3.2	15.9	3.2	19.0	3.2	22.2	3.2	28.6	3.2	34.9	3.2
19.0 to 25.4, excl	15.9	3.2	15.9	3.2	15.9	3.2	19.0	3.2	22.2	3.2	28.6	3.2	34.9	3.2	41.2	3.2
25.4 to 31.8, incl	19.0	3.2	19.0	3.2	19.0	3.2	22.2	3.2	28.6	3.2	34.9	3.2	41.2	3.2		...
Abrasive-cut:[E]																
4.8 to 31.8, incl	3.2	3.2	3.2	3.2	3.2	3.2	3.2	3.2	3.2	3.2	3.2	3.2	...	...	...	...
Over 31.8 to 69.9, incl	4.8	3.2	4.8	3.2	4.8	3.2	4.8	3.2	4.8	3.2	4.8	3.2	...	...	...	...
Plasma torch-cut:[F]																
4.8 to 50.8, excl	12.7	0	12.7	0	12.7	0	12.7	0	12.7	0	12.7	0	12.7	0	12.7	0
50.8 to 69.8, incl	15.9	0	15.9	0	15.9	0	15.9	0	15.9	0	15.9	0	15.9	0	15.9	0

[A] Permissible variations in length for powder- or inert arc-cut plate shall be agreed upon between the manufacturer and the purchaser.
[B] The tolerance spread shown for plasma torch cutting may be obtained all on the minus side, or divided between the plus and minus sides if so specified by the purchaser.
[C] Permissible variations in machined, powder- or inert arc-cut circular plate shall be as agreed upon between the manufacturer and the purchaser.
[D] The minimum sheared length is 24 in. (610 mm).
[E] Abrasive cut applicable to a maximum length of 144 to 400 in. (3658 to 10 160 mm), depending on the thickness and width ordered.
[F] The tolerance spread shown for plasma torch-cut sketch plates shall be as agreed upon between the manufacturer and the purchaser.

MANDATORY APPENDIX I
STANDARD UNITS FOR USE IN EQUATIONS

04

TABLE I-1
STANDARD UNITS FOR USE IN EQUATIONS

Quantity	U.S. Customary Units	SI Units
Linear dimensions (e.g., length, height, thickness, radius, diameter)	inches (in.)	millimeters (mm)
Area	square inches ($in.^2$)	square millimeters (mm^2)
Volume	cubic inches ($in.^3$)	cubic millimeters (mm^3)
Section modulus	cubic inches ($in.^3$)	cubic millimeters (mm^3)
Moment of inertia of section	$inches^4$ ($in.^4$)	$millimeters^4$ (mm^4)
Mass (weight)	pounds mass (lbm)	kilograms (kg)
Force (load)	pounds force (lbf)	newtons (N)
Bending moment	inch-pounds (in.-lb)	newton-millimeters (N·mm)
Pressure, stress, stress intensity, and modulus of elasticity	pounds per square inch (psi)	megapascals (MPa)
Energy (e.g., Charpy impact values)	foot-pounds (ft-lb)	joules (J)
Temperature	degrees Fahrenheit (°F)	degrees Celsius (°C)
Absolute temperature	Rankine (R)	kelvin (K)
Fracture toughness	ksi square root inches (ksi$\sqrt{in.}$)	MPa square root meters (MPa$\sqrt{m}$)
Angle	degrees or radians	degrees or radians
Boiler capacity	Btu/hr	watts (W)